RIGID PAVEMENT RESTORATION

FIGURE 7-4

NOT TO SCALE

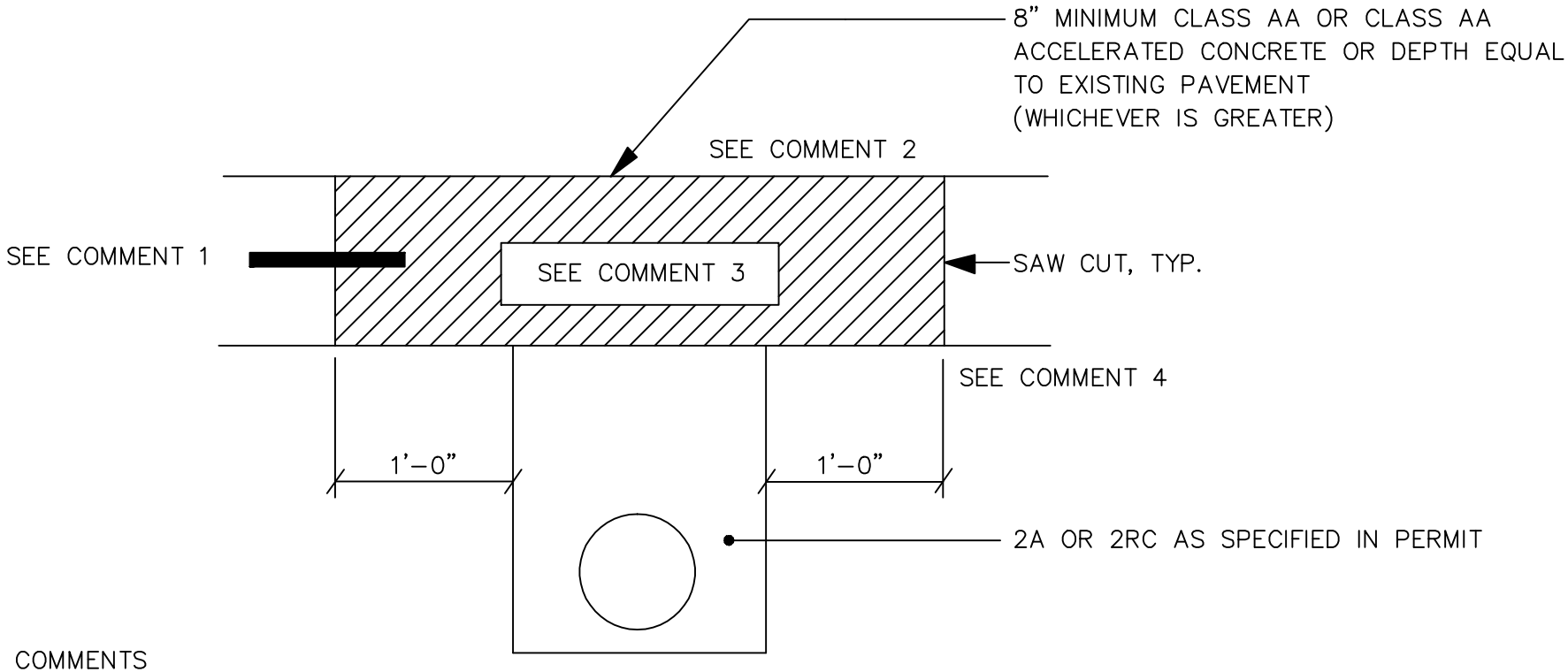

COMMENTS

1. ON R.C. PAVEMENT, PLACE REINFORCING STEEL, TIE BOLTS, AND LOAD TRANSFER DEVICES AS PER R.C. 26
2. SURFACE TEXTURE AS PER PUB 408, SECT. 501.3(k)
3. FOR LIMITS OF CONCRETE REPLACEMENTS, SEE DEPT. REG. 459.8(i)(4)
4. CUT BACK IS NOT REQUIRED BEYOND A TRANSVERSE OR LONGITUDINAL JOINT OR CURB.