INDEX

Product		Initial SOL Approval
1.	Evergreen Retaining Wall System	**(Deleted)**
2.	Precast "Barlok Parapet" Drawing No. PADOT # 92-051-PE	431-92-05
3.	Sound Barrier Walls Standard Details	**(Deleted)**
4.	Sound Zero Panel-Noise Barrier Walls Structure Mounted PE 91-202	**(Deleted)**
5.	Fan Walls Free Standing Noise Barrier Walls P.E. 93-034	**(Deleted)**
6.	Fan Walls Free Standing Noise Barrier Walls PADOT No. 93-034 PE Revision 1	**(Deleted)**
7.	MSE Wall: VSL Wall (Retained Earth Wall) New Square Panels Standard Detail & Shop Drawings	**(Deleted)**
8.	Pre-approved Shop Drawings MSE Walls	431-94-53 only Retained Earth Wall's portion is deleted
9.	Con/Span/Precast Bridge Systems Special Provisions and Standard Details Drawings (PADOT DWG # 86-353 PE) Item 9085 – P/C Reinforced Concrete Structures	**(Deleted)**
10.	INVERSET P/C Concrete/Steel Super Structure, Special Provisions and Standard Detail Drawings (PADOT DWG # 90-117 PE) Item 4050 – P/C Concrete Steel	431-96-49

Product		**Initial SOL Approval**
11.	Superstructure Precast Concrete Diaphragms for P/S Concrete I-Beams	431-96-51
12.	P/C Concrete Modular Block Walls Doublewal – Shop Drawings	**(Deleted by 431-01-04)**
13.	FADDIS Drycast Concrete Sound Barriers Special Provisions and Standard Detail Drawings PADOT DWG #91-317-PE Item 9086 _____ FADDIS Drycast Concrete Sound Barriers (Panels)	**(Deleted)**
14.	Strip Seal Expansion Joint Retainers The D.S. Brown Co., Inc. SSA2 – 2" Depth SSE2 – 1½" Depth PADOT DWG #96-195-/196PE	**(Deleted)**
15.	MSE Wall – Reinforced Earth Wall New Rectangular Panels – Standard Detail and Shop Drawings – English and Metric Version	**(Deleted)**
16.	Approved Strip Seal Expansion Joint Retainers, Pub. 408, Section 1026.2 Shop Drawing Review	431-98-16
17.	FADDIS Drycast Concrete Sound Barriers – Type B (Panels) Special Provisions and Detail Drawings PADOT DWG # 97-165 PE	**(Deleted)**
18.	Disc Bearings Standard Detail Drawings PADOT DWG #97-601 – BQAD	431-98-28
19.	Noise Barriers – Post & Panel (12'-0" and 16'-0" C/C Post Spacing) Superior Precast, Inc. Drawing No. PADOT # 91-245-PE (1)	**(Deleted)**

Product		**Initial SOL Approval**
20.	Carsonite Sound Barrier Walls (Panels) Ground and Structure Mounted (9 feet wide panels) PADOT Drawing No. #97-185 PE English and Metric Versions	**(Deleted)**
21.	Item 9714-2201 Dura-Hold Drycast Retaining Wall, Square Meter Item 9714-0201 Dura-Hold Drycast Retaining Wall, Square Foot Special Provisions and Standard Detail Drawings PADOT Drawing No. 95-144 PE	**(Deleted)**
22.	Item 9910-0150 SAFE Foundations for Conventional Lighting Poles (English) Item 9910-2150 SAFE Foundations for Conventional Lighting Poles (Metric) Special Provisions and Standard Detail Drawings	**(Deleted)**
23.	Item 9910-0170 SAFE Foundations for High Mast Lighting Poles (English) Item 9910-2170 SAFE Foundations for High Mast Lighting Poles (Metric) Special Provisions and Standard Detail Drawings	**(Deleted)**
24.	Item 9910-0180 SAFE Foundation for Cantilever And Center- Mount Sign Structure Poles (English). Item 9910-2180 SAFE Foundation for Cantilever And Center- Mount Sign Structure Poles (Metric). Special Provisions and Standard Detail Drawings	**(Deleted)**
25.	Item 9086-0221 Precast Prestressed Posts for Sound Barrier Wall (English) Item 9086-2221 Precast Prestressed Posts for Sound Barrier Wall (Metric) Special Provisions and Standard Detail Drawings PADOT DWG # 99-098 PE (English & Metric Units)	**(Deleted)**
26.	Item 8550-5006 Bebo Precast Concrete Arch Bridge System (English Units) Special Provisions and Standard Detail Drawings. PADOT Drawing # 98-211 PE (English Units)	431-00-05

Product		**Initial SOL Approval**
27.	Item 9714-2205 T-Wall Retaining Wall System (Metric) Item 9714-0205 T-Wall Retaining Wall System (English) Special Provisions and Standard Detail Drawings. PADOT Drawing # 87-402 PE	**(Deleted)**
28.	Item 9086-2305 Absorptive Precast Sound Barrier Wall (Panels) (Metric) Item 9086-0305 Absorptive Precast Sound Barrier Wall (Panels) (English) Special Provisions and Standard Detail Drawings. PADOT Drawing # 99-130 PE	**(Deleted)**
29.	Pre-approved Shop Drawings MSE Walls Foster Geotechnical Retained Earth Wall Panels (Square and Hexagon Panels)	431-01-06
30.	Con/Span Precast Bridge or Culvert Systems Special Provisions and Standard Detail Drawings [PADOT DWG #86-353 PE (change #1)] Item 8550-xxxx P/C Reinforced Concrete Structures.	**(Deleted)**
31.	Evergreen Precast Concrete Retaining Wall System Special Provisions and Standard Detail Drawings (PADOT DWG. #92-047 PE) Item 8623-20xx (Item 8623-00xx) Evergreen Precast Concrete Retaining Wall Systems	**(Deleted)**
32.	Precast Sound Barrier Wall (Panels) PADOT DWG. #99-098 (1) PE	**(Deleted)**
33.	Item 8642-xxxx - Evergreen Precast Concrete Retaining Wall System Special Provisions and Standard Detail Drawings [PADOT DWG. #92-047 PE (1)]	431-03-09
34.	MSE Wall Reinforced Earth Wall Rectangular Panels Shop Drawings English and Metric Versions PADOT Drawing #04-601 BQAD	431-04-10

Product		**Initial SOL Approval**
35.	FADDIS Concrete Products Temporary Concrete Median Barrier Structure Mounted Shop Drawings PENNDOT Drawing #05-601-BQAD	431-05-02
36.	Item 9000-7003 - Schuylkill Products Inc. Everwall Abutment and Retaining Wall System Standard Drawings PENNDOT Drawing PE# 2002-021	431-05-04
37.	FADDIS Concrete Products Temporary Concrete Single Face Barrier Structure Mounted Shop Drawing PENNDOT Drawing 06-601-BQAD	431-06-04
38.	Hanson Pipe & Precast Post and Panel Noise Barrier Details PENNDOT Drawing 91-245-PE(2)	431-08-01
39.	Concrete Innovations Services Whisper Wall Absorptive Precast Sound Barrier Standard Drawings PENNDOT Drawing #2007-040Q	431-08-01
40.	Diamond Manufacturing Co. AcoustaX w/ NEPCOAT Paint System, Aluminum Panel, Structure Mounted Special Provision and Standard Drawing PennDOT Drawing #2002-130PE Item 9000-7024 AcoustaX Absorptive Sound Barrier System, Structure Mounted	431-08-15
41.	Faddis Concrete Products AcoustaCrete Precast Absorptive Sound Barrier Panel Wall System Special Provision and Standard Drawing PennDOT Drawing #2000-335PE Item 9000-7025	431-08-16
42.	Item 9000-7026 - Centria Coated Steel Sound Barrier System Special Provision and Standard Drawing PennDOT Drawing, PE #2006-206	431-09-03 (original approval by BOCM letter of 9-7-07)

Product		**Initial SOL Approval**
43.	Tricon Precast, Ltd. Tricon Retained Soil Wall Panels System PennDOT Drawing #2004-124 PE	**(Deleted)**
44.	Item 9000-7009 - Metal Finned Pipe Foundations for Conventional Lighting Poles Special Provisions and Standard Detail Drawings PennDOT Drawing #99-034 PE, Rev. 1	**(Deleted)**
45.	Item 9000-7010- Metal Finned Pipe Foundations for High Mast Lighting Poles Special Provisions and Standard Detail Drawings PennDOT Drawing #95-291 PE, Rev. 1	**(Deleted)**
46.	Item 9000-7011 - Metal Finned Pipe Foundations for Cantilever and Center-Mount Structures Special Provisions and Standard Detail Drawings PennDOT Drawing #95-290 PE, Rev. 1	**(Deleted)**
47.	Next Beam Precast Concrete Beam System PennDOT Drawing # 09-02-BQAD	**(Deleted)**
48.	Circular Base Plates for Press Brake Columns for Overhead Sign Structures PennDOT Drawing # 10-601-BQAD	431-10-11
49.	Spliced Prestressed Concrete Girder Standards Drawings and Design Criteria PennDOT Drawing # 09-601-BQAD	431-10-15
50.	Item 9000-7027 - PLYWALL Sound Barrier Wall System Hoover Treated Wood Products, Inc. PennDOT Drawing # 2009-050 PE	431-11-10
51.	Item 8620-7004 – Dura-Hold Wall System Dura-Sales PennDOT Drawing # 95-144R PE	431-11-10
52.	Item 9714-0205 – Prefabricated T-Wall Retaining Wall System The Neel Company PennDOT Drawing # 87-402 PE (Revision II)	**(Deleted)**

Product		**Initial SOL Approval**
53.	Item 8530-xxxx Metal Box Culvert Aluminum Structural Plate Box Culvert Lane Enterprises, Inc. PennDOT Drawing # 2012-110 PE	431-12-09
54.	Item 9086-2408 – SENTRY-CAST Sound Barrier Wall System FABCON Companies PennDOT Drawing # 2011-275 PE	431-12-10
55.	Item 9000-7007 – Zoneguard™ Portable Steel Barrier System Hill and Smith, Inc. PennDOT Drawing # 12-602-BDTD	483-13-02
56.	Precast Concrete Substructure Standards and Precast Structure Elements Guidelines Central Atlantic Bridge Associates (CABA) PennDOT Drawing # 12-603-BDTD	483-13-03
57.	Item 8622-7005 – Stone Strong Retaining Wall System Garden State Precast Inc. PennDOT Drawing # 2009-187 PE	483-13-04
58.	PA Bulb-Tee Beam WWR Details Standard Central Atlantic Bridge Associates (CABA). PennDOT Drawing # 13-601-BDTD, REV.1	483-14-01
59.	Spliced Prestressed Concrete Girder Standards Drawings and Design Criteria Central Atlantic Bridge Associates (CABA) PennDOT Drawing # 12-601-BQAD	483-13-05
60.	Item 9000-7000 – Prefabricated T-Wall Retaining Wall System The Neel Company PennDOT Drawing # 87-402 PE (Revision III)	**(Deleted)**
61.	NEXT Beam Precast Concrete Beam System PennDOT Drawing # 09-02-BQAD, REV.1	483-13-07
62.	Strip Seal Expansion Joint Retainers The D.S. Brown Co., Inc. PADOT DWG #96-195-/196PE (Revision 1)	483-13-10

Product		**Initial SOL Approval**
63.	Item 8620-0235 - Prefabricated Rett-Wall Retaining Wall System, J & R Slaw Inc. PADOT DWG #2011-203 PE	483-13-10
64.	Item 8622-0215 - Mechanically Stabilized Earth U-Wall System, Northeast Prestressed Products PennDOT Drawing # 2010-221 PE	483-13-11
65.	Item 9000-7011 - Metal Foundations for Overhead Sign Structures, Cantilever and Center-Mount Structures Shaner Industries PennDOT Drawing #13-602-BDTD	483-13-13
66.	Item 8622-7002 –ARES Retaining Wall System Tensor International Cooperation PENNDOT Drawing 2011-273 PE	483-14-01
67.	Prestressed Box Beam WWR Details Standard Central Atlantic Bridge Associates (CABA) PennDOT Drawing # 14-601-BDTD	483-14-01
68.	Item 9000-7031– Acrylite Soundstop Structure Mounted Sound Barrier System Evonik Cyro LLC PADOT Drawing #2012-050A PE	483-14-02
69.	Item 9000-7022– Composite Arch Bridge System Advanced Infrastructure Technologies LLC PennDOT Drawing #2013-236 REV. 1	483-14-05
70.	Item 9000-7008 – BarrierGuard 800 System Highway Care Ltd PennDOT Drawing #14-602-BDTD	483-14-06
71.	Item 9000-7023 –Folded Steel Plate Girder System CDR Bridge Systems, LLC PennDOT Drawing #14-604-BDTD (REV. 1)	483-14-07
72.	Item 9000-7032– Metal Foundations for Dynamic Message Center-Mount Sign Structures Shaner Industries PennDOT Drawing #14-603-BDTD	483-15-02

Product		**Initial SOL Approval**
73.	Item 9000-7010– Metal Foundations for High Mast Lighting Pole Shaner Industries PennDOT Drawing #95-291 PE, Rev. 2	483-16-01
74.	Spliced Post-Tensioned Concrete U-Girder Standards Central Atlantic Bridge Associates (CABA) PennDOT Drawing #15-601-BDTD	483-16-04
75.	Item 9000-7009 - Metal Foundations for Conventional Lighting Pole Shaner Industries PennDOT Drawing #99-034 PE, Rev. 2	483-16-06
76.	Item 8642–7000 Prefabricated T-Wall Retaining Wall System The Neel Company PennDOT Drawing # 87-402 PE (Revision IV)	483-17-01
77.	Item 9000-7101 - SINE WALL MSE Panel System SINE WALL, LLC PennDOT Drawing # 2015-110	483-17-04
78.	Item 8550-xxxx - Con/Span Precast Structure Standard Contech Engineered Solutions LLC PennDOT Drawing # 86-353 PE (Change #2)	483-17-04
79.	Item 9000-7033 – Superior Transparent Sound Barrier System Superior Transparent Noise Barriers, LLC PennDOT Drawing # 2017-332 (REV. 1)	483-18-01
80.	Item 8622-xxxx – Redi-Rock Gravity Retaining Wall System Redi-Rock International PennDOT Drawing # 2016-030	483-18-02
81.	Item 8622-xxxx – Redi-Rock Positive Connection Retaining Wall System Redi-Rock International PennDOT Drawing # 2015-067	483-18-02
82.	Item 8550-xxxx – ECO-Span® Precast Ach-Box System Pretek Group PennDOT Drawing # 2014-115	483-18-04

Product		**Initial SOL Approval**
83.	Item 8530-xxxx – Aluminum Structural Plate Box Culverts Contech Engineered Solutions LLC PennDOT Drawing # 2013-224 PE	483-19-05
84.	Item 8622-xxxx – Gravix Retaining Wall System Earth Wall Products, LLC PennDOT Drawing # 2016-296	483-19-07

"BARLOK" PRECAST CONCRETE PARAPET

U.S. PATENT #4605336

DESCRIPTION: This work consists of fabricating precast "Barlok" Bridge Parapet Units according to Section 714, placing and grouting these units according to the following procedures, and construction of cast-in-place closure sections according to the Standard Drawings. Barlok parapet is permitted wherever cast-in-place concrete parapet is indicated on the contract drawings within the limits imposed on [redacted] and contained herein.

PADOT #92-051-PE approved on Feb. 3, 1992

A. MATERIALS -

1. Concrete
   (a) **Cast in place.** Class AA Cement, Section 704
   (b) **Precast.** AAA Concrete. Section 704, Section 714.7, Bulletin 5, and the following mix design requirements:
   - Cement - Section 701, - 7.0 Bags/CY
   - Slump - 2" Maximum before Superplasticizer
   - Superplasticizer - Section 711.3. Dosage to bring slump to maximum.
   - Other Admixtures - Section 711.3
   - Air Content - 7% +/- 2% with Superplasticizer
   - 28 Day Strength - 4500 psi Minimum

2. **Void Grout.** Make in accordance with Bulletin 5, and the following mix design requirements:
   - 1 part Cement/2 parts Concrete Sand - Section 701 and 703.1(c), Type A
   - Superplasticizer - Section 711.3. - Dosage to bring slump to 8" to 10" and to maintain ease of pumping. Add no more than twice.
   - Other Admixtures - Section 711.3
   - Steel Fibers - 75# per cubic yard. Novocon or approved equal
   - Water - Use minimum volume that will result in a pumpable mix with a maximum of five gallons per bag of cement.
   - Discard Grout over 1 1/2 hours old or when initial hardening occurs, whichever is first.
   - 7 Day Strength - 4500 psi, Minimum
   - 28 Day Strength - 5500 psi, Minimum
   - When Grout trial mix is made provide 3 each 2" cubes made in accordance with Section 10.4.4 of ASTM C109. After curing, send samples to the Materials Testing Division for freeze-thaw analysis.

3. **Mortar Bed.** Make and place in accordance with the requirements of Section 705.7 and the following mix requirements:
   - 1 part Cement/2 parts Mortar Sand - Section 701 and Section 703.1(c), Type C

4. **Vertical Expansion Joint.** Section 705.1, and as shown on the Standard Drawing.

5. **Reinforcing.** Section 709.1(d) for Epoxy Coated Reinforcement Bars, and Section 709.3(a) for Epoxy Coated Welded Wire Fabric.

6. **Horizontal Joint Sealant.** Pecora Dynatrol 1 or approved equal.

B. FABRICATION - Section 714.6

(a) **Cleaning.** After fabrication procedures for the precast units have been completed, clean semi-circular cavity passage along the base of the barrier unit and entire bottom surface. Remove all laitance loose concrete, and any other material which might interfere with bond between barrier unit and subsequent grout placement. Accomplish cleaning by waterblast method. Use a power washer with 2000 to 2500 psi pressure.

(b) **Rejection.** Reject individual precast parapet segments for any of the following:
1. Fractures or cracks passing through the parapet.
2. Defects that indicate proportioning, mixing and molding not in compliance with the specification as specified or indicated.
3. Honeycombed open texture.
4. 28 day cylinder strength is less than design concrete strength.
5. Damage where such defects would prevent making a satisfactory joint or connections.
6. Dimensions and reinforcements not conforming to the allowable tolerances as specified.
7. Color variation on the front, back and top faces.

Mark the rejected precast concrete segments "REJECTED FOR DEPARTMENT USE" with waterproof paint.

(c) **Repair.** Repair and repair procedures require approval by the Engineer.

C. **DRAWINGS** - Section 105.02, and as approved by the Engineer. The Shop drawings are to contain precast segment locations, all necessary field installation details, and details of the cast-in-place parapet. Revise all affected details including bar schedule and quantities on the bridge contract drawings and submit them with the Shop drawings for approval.

D. **TOLERANCES** - Section 714.9

E. **CONCRETE FINISH** - Section 1001.3 (k) 9a.

PADOT #92-051-PE approved on Feb. 3, 1992

F. **CONSTRUCTION** - Perform Construction according to Drawing No. ~~[illegible]~~ and the following details:

1. **Cleaning.** Thoroughly clean surfaces of bridge deck against which precast barrier is to be placed of all material which may prevent mortar bonding. Use power washer with 2000 to 2500 psi pressure. Dampen bottom of the precast barrier to prevent premature drying of the mortar bed.

2. **Deck Tiedowns.** Inspect tiedowns for proper alignment and continuity of coating. Repair coating according to Section 709.1(d), third bullet point.

3. **Mortar Beds.** Place mortar bed a minimum of 3" wide and a maximum 1/2" thick on the structural slab for the full length of the barrier unit along both sides of the unit and according to Standard Drawing. Place the Barlok unit so that the outside edges of the unit meet the mortar bed material. Tool the mortar to provide a minimum 1/4" recess for applying joint sealant. Do not allow mortar to set prior to placing unit. If in the Engineer's opinion the mortar has begun to set, remove all traces of mortar; reclean, and place fresh mortar bed. Do this work at no additional cost to the Department. Do not retemper mortar which in the Engineer's opinion has begun to set.

4. **Erection.** Align all precast Barlok units on the mortar bed to proper line and grade before any cast-in-place sections are installed. Add or remove mortar as necessary to make vertical adjustments. Place wedges when necessary to achieve proper alignment. Examine the joint to be sure there is sufficient mortar for proper bonding. Do not break mortar bond . After precast unit is properly aligned, place #9 dowel bar into proper position through tiedowns and exposed parapet reinforcing. Inspect the #9 dowel through the grout/vent holes to insure proper placement. Place permanent joint filler before setting next unit in place.

5. **Grouting.** Proceed using the smallest pump practical with a non-adjustable relief valve set to bypass at 1500 psi, a flow control v[illegible]hat allows presetting of number of strokes (0-25 per minute) of the hydraulic cylinder, capable of instantaneous pressure control, and a hose size of 2". Begin pumping through the center 2" hole in precast unit and proceed until each of the end holes are filled completely. It may be necessary to temporarily place a short length of 1-1/2" pipe in lower hole of precast piece when bridge deck is on a steep grade. Cease grouting if any lifting of parapet occurs. Remove affected barrier unit. Thoroughly clean substrate of all bedding and anchor grout. Inspect substrate to make sure no grout traces remain after cleaning operation.

6. **Cast-In-Place.** Cast closure pieces with Class AA Concrete in accordance with Section 1001.

7. **Finishing.** Patch all grout holes and lifting inserts with non-shrink mortar matching the surrounding concrete as nearly as possible.

8. **Sealant.** Pecora Dynatrol 1, or approved equal. Joint surfaces and bond breaker tape must be dry, clean and free from all foreign matter, laitance and efflorescence . Use air blast to clean. Fill joint completely, using standard caulking equipment.

9. **Replacement.** If one piece of precast parapet is damaged, replace with cast-in-place section. If two or more pieces are damaged, and if deck and tiedowns remain in satisfactory condition after cleaning away all remnants of previous parapet installation, prepare substrate for new precast units in the same manner as in No. 1, Construction Section. Place one precast section next to existing precast unit. Place one #9 dowel bar in the same manner as per No. 4, Construction Section. Final section is to be cast-in-place. Finish with grouting procedure, patching and sealing as per No. 5, No. 7, and No. 8, Construction Section.

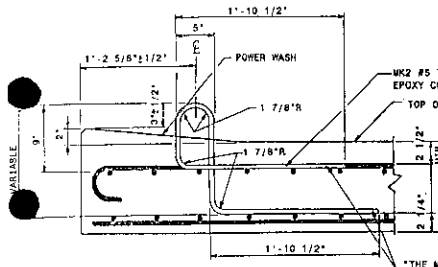

DETAIL F
SCALE 1 1/2": 1'-0"

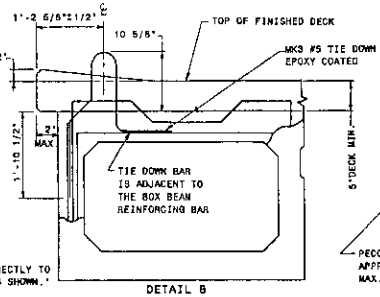

DETAIL B
BOX BEAM DETAIL
SCALE: N.T.S.

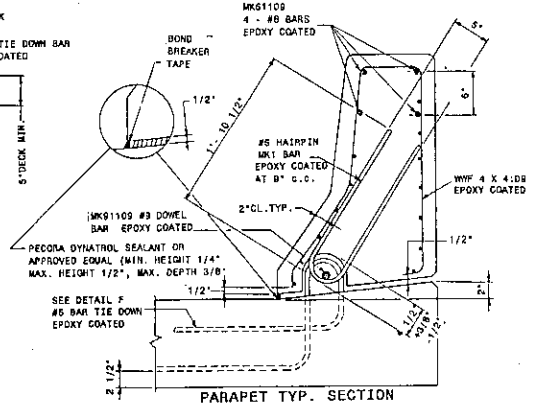

PARAPET TYP. SECTION
SCALE 1 1/2": 1'-0"

NOTES:

1. ALL MATERIAL AND WORKMANSHIP IS TO BE IN ACCORDANCE WITH SPECIFICATIONS FOR PUBLICATION 408 INCLUDING INTERIM REVISIONS.

2. USE CLASS "AAA" CEMENT CONCRETE FOR PRECAST SECTIONS. USE CLASS "AA" CEMENT CONCRETE FOR CAST IN PLACE SECTIONS.

3. USE AASHTO DESIGNATED M-31 (ASTM A-615) GRADE 60, EPOXY COATED REINFORCING BARS.

4. THE SECTION LENGTH SHOWN IS THE MINIMUM 12'-0" (11'-11 1/2" PLUS 1/2" JOINT) SECTION. EXCEPTION: USE ONE 10'-0" (9'-11 1/2" PLUS 1/2" JOINT) SECTION PER SIDE TO ACCOMMODATE SPAN LENGTH. LENGTH MAY BE INCREASED TO SUIT FIELD CONDITIONS AND TO PROVIDE SYMMETRY. 10'-0" MINIMUM SECTION LENGTH IN NEGATIVE MOMENT AREAS.

5. THE THREE 2" DIAMETER GROUT/VENT HOLES MUST NOT EXCEED THE 5'-0" VENT HOLE SPACING. DO NOT FIELD DRILL GROUT/VENT HOLES.

6. MATCH TIE DOWN VOIDS IN THE PARAPET TO TIE DOWN BARS (MK2 OR MK3) CAST INTO THE DECK OR BEAM. SPACING WILL BE 9" (± 1/2").

7. PLACE THE #9 DOWEL (MK91109) AND THE 1/2" EXPANSION JOINT INTO PROPER POSITION BEFORE GROUTING. INSPECT THE #9 DOWEL THROUGH THE GROUT/VENT HOLES TO INSURE PROPER PLACEMENT.

8. PLACE EACH SECTION OF PARAPET ON A LEVELING BED OF MORTAR AND INSPECT FOR PROPER LINE AND PLUMB PRIOR TO GROUTING. THE TOLERANCE IS TO BE 1/4" IN 10'-0". ACHIEVE WITH THE AID OF SMALL WEDGES TEMPORARILY SUPPORTING THE PARAPET.

9. GROUT IS TO MEET MINIMUM COMPRESSI[illegible] OF 4500 PSI AT 7 DAYS AND 5500 PSI AT [illegible] ONE PART CEMENT, TWO PARTS SAND, AND A [illegible] VOLUME OF WATER THAT WILL RESULT IN A [illegible] (MAXIMUM OF 5 GALLONS PER BAG OF CEMEN[illegible] SUPERPLASTICIZER, AND RETARDER WHEN N[illegible] RECOMMENDED BY THE ADMIXTURE SUPPLIER. [illegible] STEEL FIBERS (HOVOCON INTERNATIONAL CO[illegible] EQUAL) PER CUBIC YARD OF GROUT MIXTURE.

10. PROCEED TO GROUT ENTIRE VOID THR[illegible] DIAMETER CENTER FILL HOLE WITH PUMP SI[illegible] PRESSURE. PUMP MUST BE CAPABLE OF IN[illegible] PRESSURE CONTROL. FILL UNTIL THE GRO[illegible] ESCAPE THROUGH THE 2" DIAMETER HOLES [illegible] ENDS OF THE GROUT CHAMBER. MAINTAIN [illegible] PRESSURE SO THAT NO LIFTING MOVEMENT [illegible] BOND WITH MORTAR BED IS NOT BROKEN. [illegible] VENT HOLES AND LIFTER VOIDS WITH NONS[illegible] (COLOR MATCH) AFTER GROUTING IS COMPL[illegible]

11. LENGTH OF CAST IN PLACE SECTION[illegible] EXPANSION JOINTS AND SCUPPERS MUST BE [illegible] MINIMUM.

12. USE AASHTO DESIGNATED M183 OR A[illegible] STRUCTURAL STEEL FOR PLATES. COAT P[illegible] ACCORDANCE WITH PUBLICATION 408 SPECI[illegible] SECTION 709.1(d).

13. THE SHOP DRAWINGS ARE TO CONTAIN [illegible] SEGMENT LOCATIONS, ALL NECESSARY FIEL[illegible] INSTALLATION DETAILS AND DETAILS OF T[illegible]

14. THE BARLOK SYSTEM IS NOT PERMITTED ON AN ADJACENT BOX BEAM BRIDGE WITHOUT A C[illegible] DECK.

15. THE BARLOK SYSTEM IS ONLY PERMITTED FOR PARAPETS WITH A TOP WIDTH OF 12" OR G[illegible]

16. VOIDS WITHIN THE PARAPET JOINT ARE NOT PERMITTED FOR THROUGH THE PARAPET DE[illegible]

17. BARLOK PARAPET IS NOT PERMITTED WHERE LIGHTING CONDUITS ARE PLACED WITHIN THE PARAPET.

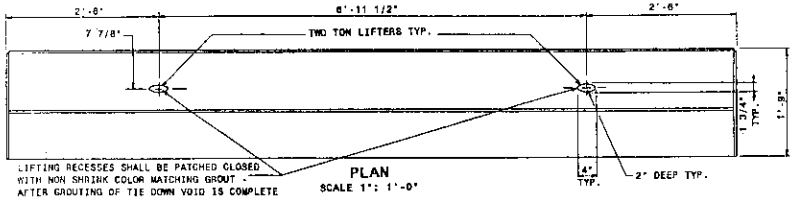

PLAN
SCALE 1": 1'-0"

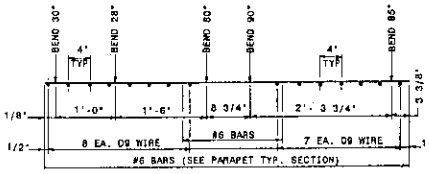

BENDING DIAGRAM WWF
SCALE: N.T.S.

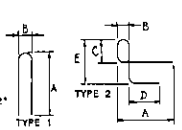

REINFORCING DETAILS											
MARK	TYPE	SIZE	A	B	C	D			F	G
MK1	1	#5	1'-10 1/2"	5"						
MK2	2	#5	1'-10 1/2"	5"	9"	1'-10 1/2"	VARIES			
MK3	3	#5	*	*	*	1'-10 1/2"			*	1'-10 1
MK91109	STR	#9	11'-9"							
MK61109	STR	#6	11'-9"							

* DIMENSIONS SHALL BE DETERMINED BY THE BEAM PRODU[illegible]R

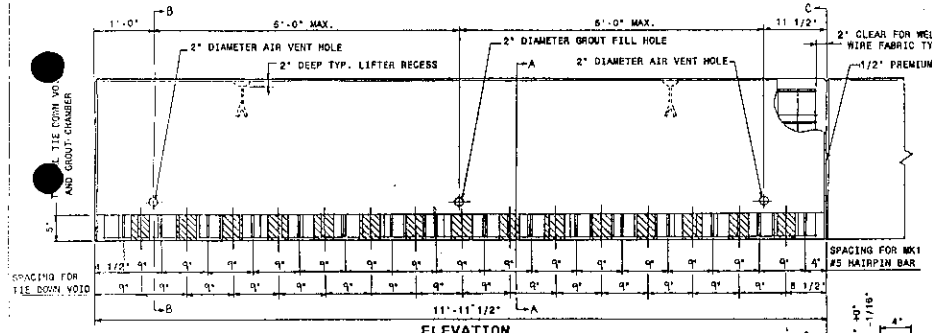

ELEVATION
SCALE 1": 1'-0"

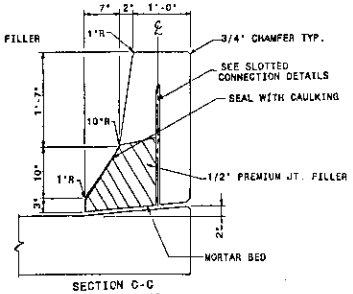

SECTION C-C
SCALE 1": 1'-0"

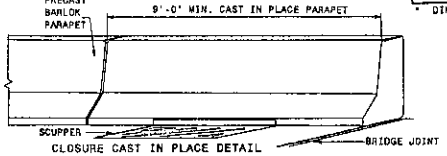

CLOSURE CAST IN PLACE DETAIL
SCALE 1/2": 1'-0"

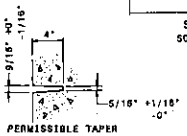

PERMISSIBLE TAPER
SCALE 1 1/2": 1'-0"

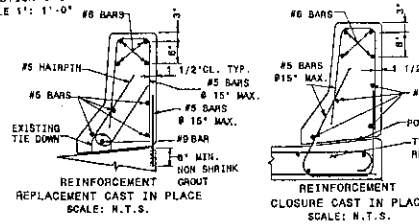

REINFORCEMENT
REPLACEMENT CAST IN PLACE
SCALE: N.T.S.

REINFORCEMENT
CLOSURE CAST IN PLACE
SCALE: N.T.S.

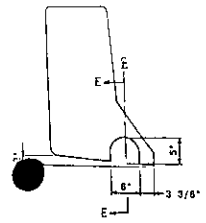

SECTION A-A
SHOWING TIE DOWN VOID
SCALE 1": 1'-0"

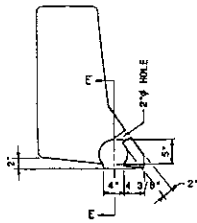

SECTION B-B
SHOWING GROUT CHAMBER
SCALE 1": 1'-0"

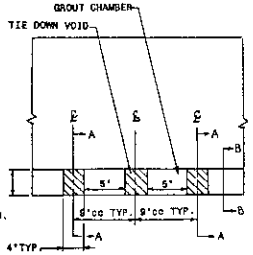

SECTION E-E
SCALE 1": 1'-0"

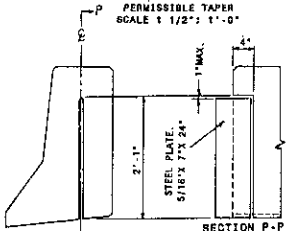

SECTION P-P
SCALE 1":1'-0"

SLOTTED CONNECTION DETAILS

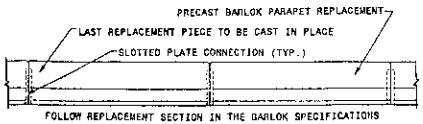

FOLLOW REPLACEMENT SECTION IN THE BARLOK SPECIFICATIONS

BARLOK PARAPET REPLACEMENT
SCALE 1/4: 1'-0"

COMMONWEALTH OF PENNSYLVANIA
DEPARTMENT OF TRANSPORTATION
DRAWING APPROVAL
RECOMMENDED BY: [illegible] FEB [illegible] 1992
DIRECTOR, BUREAU OF DESIGN

COMMONWEALTH OF PENNSYLVANI[illegible]
DEPARTMENT OF TRANSPORTATIO[illegible]

BARLOK PARAPET STA[illegible]DARD

J & R SLAW, INC.
ROUTE 248 P.O. BOX 7 PARRYVILL[illegible] PA 18244
PHONE(215)852-2020 FAX (2[illegible]5)852-209[illegible]

DATE: 1/22/92
DWG.NO.: JRS-13
PADOT#92-051-PE

SCALE: AS NOTED
DRAWN BY: PBV
SHEET 1 OF 1

Product:

Pre-approved Shop Drawings
MSE Walls

Approval Date:

December 21, 1994

Initiated By SOL:

431-94-53

Application/Use:

Standard Shop Drawings for MSE Wall Panels.

Specifications:

None

Standard Drawings:

Product Name	Producer	Drawing No.
Retained Earth Walls	V.S.L. Corp.	94-602-BQAD (12/8/94)
Reinforced Earth Walls	Reinfd. Earth Co.	94-603-BQAD (12/8/94)

Comment:

These drawings may be used as standard approved shop drawings and any panel types shown on these drawings may be produced without further checking or reviewing of the details presented in the drawings.
Panel types not shown on these drawings will require a separate shop drawing that must be submitted at the time of shop drawing submission for the entire wall on a project by project basis.
Having pre-approved shop drawings for most panels encountered in MSE Walls should drastically reduce review time and any required review for special panels can easily be accomplished "in house".

reinforced earth®

8614 WESTWOOD CENTER DRIVE SUITE 1100, VIENNA, VIRGINIA 22182 (703) 821-1175

COMMONWEALTH OF PENNSYLVANIA
DEPARTMENT OF TRANSPORTATION
DRAWING ACCEPTANCE
RECOMMENDED BY: [signature] 12/8/94
DIRECTOR, BUREAU OF DESIGN — DATE

PRECAST PANEL SHOP DRAWINGS

PANEL GENERAL NOTES

1. REINFORCING BARS SHALL BE STEEL ASTM A615 GRADE 60. EPOXY COATED PER PA DOT DM4, P,P,3,7,1,
2. TIE STRIPS SHALL BE STEEL ASTM A570 GRADE 50 (GALVANIZED PER ASTM A-123).
3. ALL FRONT EDGES OF PANELS, EXCEPT THE BOTTOM EDGE OF THE BOTTOM PANEL COURSE, SHALL HAVE A 3/8" CHAMFER.
4. TIE STRIPS SHALL BE PLACED WITHIN 1" OF THE DIMENSIONS SHOWN ON THE FABRICATION DRAWINGS.
5. PANEL DESIGN THICKNESS IS 5 1/2". THE QUANTITY OF CONCRETE WILL INCREASE TO ACCOMMODATE ANY ARCHITECTURAL SURFACE FINISH THAT MAY BE SPECIFIED.
6. EACH 3/4"Ø PIN SHALL BE A MINIMUM LENGTH OF 10". PINS MAY BE GALVANIZED STEEL OR PVC ROD. A SINGLE FULL LENGTH DOWEL MAY BE USED AT THE DISCRETION OF THE MANUFACTURER.
7. DIMENSIONS SPECIFIED ON INDIVIDUAL FABRICATION DRAWINGS SUPERSEDE THOSE CALLED OUT ON THE STANDARD SECTIONS AND DETAILS.
8. VERTICAL REINFORCING BARS SHALL BE PLACED 1 1/2" MIN. - 2" (TYP.) CLEAR FROM THE BACK FACE OF THE 5 1/2" PANEL.
9. ALL REINFORCING BARS SHALL BE STOPPED 2" CLEAR FROM ANY EDGE OF PANEL UNLESS NOTED ON INDIVIDUAL FABRICATION DRAWING OR AS INDICATED IN NOTE #10.
10. IN ALL SLOPED PANELS (xxK, xxC, xxI, xxJ, xxM, xxN, xxII, xxJJ) THE TWO (2) VERTICAL REINFORCING BARS ADJACENT TO A COMMON TIE STRIP SHALL BE OF THE SAME LENGTH.
11. IF COPING DOWELS ARE REQUIRED THEY SHALL BE 2'-0" LONG, TREE (3) PER PANEL.
12. ALL INDIVIDUAL FABRICATION DRAWINGS ARE SHOWN BACK FACE.
13. 28 DAYS CONCRETE STRENGTH TO BE f'c = 4000 psi.
14. PRECAST PANELS TO BE FABRICATED ACCORDING TO SPECIFICATION B.408-SECT 714

PANEL GENERAL NOTES (CONT.)

15. REINFORCING BARS IN A STANDARD "A" PANEL SHALL BE AS FOLLOWS:

PANEL REINFORCEMENT

PIECE MARK	HORIZONTAL BARS	VERTICAL BARS
XX-XX-R6	4-#4	6-#3
XX-XX-R7	4-#6	6-#4

HORIZONTAL REINFORCEMENT IN THE OTHER PANEL TYPES IS PROPORTIONATE TO THEIR RELATIVE HEIGHT.

16. KEY TO PIECE MARK:

AL-4-R6-3.00'

- PANEL TYPE
- MODIFICATION (ONE OR MORE)
- NUMBER OF TIE STRIPS
- PANEL REINFORCEMENT TYPE
- MODIFICATION DIMENSION (WIDTH OR DIAMETER OR BEND ANGLE)

17. KEY TO PANELS:

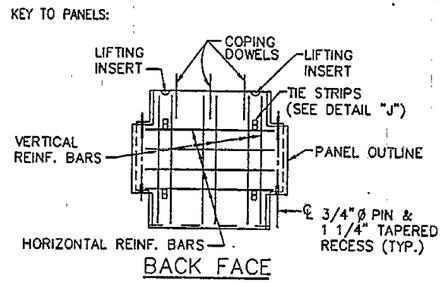

PANEL INDEX

SHEET NO.	PANEL TYPE	SHEET NO.	PANEL TYPE	SHEET NO.	PANEL TYPE	SHEET NO.	PANEL TYPE	SHEET NO.	PANEL TYPE	SHEET NO.	PANEL TYPE
S1	GENERAL NOTES	S5	BL-4-R6-4.45	S7	PR-8-R6-4.45	S9	BR-2-R7-4.45	S11	PR-9-R7-4.45	S18	KR-5-R6-4.45
S2	STD. DETAILS	S5	BR-2-R6-4.45	S7	PR-9-R6-4.45	S9	BR-3-R7-4.45	S12	SLIP JOINTS	S18	L-6-R6
S3	STD. DETAILS	S5	BR-3-R6-4.45	S8	A-4-R7	S9	BR-4-R7-4.45	S13	"CE1"	S18	L-7-R6
S4	A-4-R6	S5	BR-4-R6-4.45	S8	A-5-R7	S10	Q-4-R7	S14	"CE2"	S18	L-8-R6
S4	A-5-R6	S6	Q-4-R6	S8	A-6-R7	S10	Q-5-R7	S15	"CE3"	S18	L-9-R6
S4	A-6-R6	S6	Q-5-R6	S8	A-7-R7	S10	Q-6-R7	S16	"CE4"	S18	LR-6-R6-4.45
S4	A-7-R6	S6	Q-6-R6	S8	A-8-R7	S10	QL-4-R7-4.45	S17	C-2-R6	S18	LL-6-R6-4.45
S4	A-8-R6	S6	QL-4-R6-4.45	S8	AD1-4-R7	S10	QL-5-R7-4.45	S17	CL-2-R6-4.45		
S4	AD1-4-R6	S6	QL-5-R6-4.45	S8	AD1-5-R7	S10	QL-6-R7-4.45	S17	CR-2-R6-4.45		
S4	AD1-5-R6	S6	QL-6-R6-4.45	S8	AD1-6-R7	S10	QR-4-R7-4.45	S17	D-2-R6		
S4	AD1-6-R6	S6	QR-4-R6-4.45	S8	AD1-8-R7	S10	QR-5-R7-4.45	S17	DR-2-R6-4.45		
S4	AD1-8-R6	S6	QR-5-R6-4.45	S8	AD2-4-R7	S10	QR-6-R7-4.45	S17	OL-2-R6-4.45		
S4	AD2-4-R6	S6	QR-6-R6-4.45	S8	AD2-5-R7	S10	P-6-R7	S17	E-3-R6		
S4	AD2-5-R6	S6	P-6-R6	S8	AD2-6-R7	S10	P-8-R7	S17	EL-3-R6-4.45		
S4	AD2-6-R6	S6	P-8-R6	S8	AD3-4-R7	S10	P-8-R7	S17	ER-3-R6-4.45		
S4	AD3-4-R6	S6	P-9-R6	S8	AD3-5-R7	S10	PD1-6-R7	S17	F-4-R6		
S4	AD3-5-R6	S6	PD1-6-R6	S8	AD3-6-R7	S10	PD1-8-R7	S17	FR-4-R6-4.45		
S4	AD3-6-R6	S6	PD1-8-R6	S9	AL-4-R7-4.45	S10	PD1-9-R7	S17	FL-4-R6-4.45		
S5	AL-4-R6-4.45	S6	PD1-9-R6	S9	AL-5-R7-4.45	S11	PD2-6-R7	S17	G-4-R6		
S5	AL-5-R6-4.45	S7	PD2-6-R6	S9	AL-6-R7-4.45	S11	PD2-8-R7	S17	GL-4-R6-4.45		
S5	AL-6-R6-4.45	S7	PD2-8-R6	S9	AR-4-R7-4.45	S11	PD2-9-R7	S17	GR-4-R6-4.45		
S5	AR-4-R6-4.45	S7	PD2-9-R6	S9	AR-5-R7-4.45	S11	PD3-6-R7	S18	H-4-R6		
S5	AR-5-R6-4.45	S7	PD3-6-R6	S9	AR-6-R7-4.45	S11	PD3-8-R7	S18	H-5-R6		
S5	AR-6-R6-4.45	S7	PD3-8-R6	S9	B-2-R7	S11	PD3-9-R7	S18	HR-4-R6-4.45		
S5	B-2-R6	S7	PD3-9-R6	S9	B-3-R7	S11	PL-6-R7-4.45	S18	HL-4-R6-4.45		
S5	B-3-R6	S7	PL-6-R6-4.45	S9	B-4-R7	S11	PL-8-R7-4.45	S18	K-5-R6		
S5	B-4-R6	S7	PL-8-R6-4.45	S9	BL-2-R7-4.45	S11	PL-9-R7-4.45	S18	K-6-R6		
S5	BL-2-R6-4.45	S7	PL-9-R6-4.45	S9	BL-3-R7-4.45	S11	PR-6-R7-4.45	S18	K-7-R6		
S5	BL-3-R6-4.45	S7	PR-6-R6-4.45	S9	BL-4-R7-4.45	S11	PR-8-R7-4.45	S18	KL-5-R6-4.45		

PADOT DRAWING #94-603-BQAD

...formation proprietary to The Reinforced Earth Company, and is ...e of PENN. DOT only.
...mpany is exclusive licensee in the United States under patents ...nd the furnishing of this drawing does not constitute an ...cense under the Vidal patents.

COMMONWEALTH OF PENNSYLVANIA — REGISTERED PROFESSIONAL ENGINEER — DAVID PAUL MCNUTT — No. 19595E

The Reinforced Earth Company
reinforced earth
8614 Westwood Center Drive
Suite 1100
Vienna, Virginia 22182
(703) 821-1175

"REINFORCED EARTH" is the registered trademark of The Reinforced Earth Company.

DESIGNED BY: RS
PROJECT ENGR:
CHECKED BY: CP
ENG. MANAGER: CP

REV.	DATE	DESCRIPTION
2	10/17/94	ADDED TOP PANELS SHEET S17 & S18
1	11/9/93	REV. AS PER PENN. DOT. COMMENTS

PROJECT NAME	STANDARD PRECAST PANEL SHOP DRAWINGS	DATE	12/03/93
LOCATION		CONTRACT NO.	
OWNER	PENN. DOT	DRAWING NO.	S1
DRAWING COVERS	GENERAL NOTES	SCALE	NONE

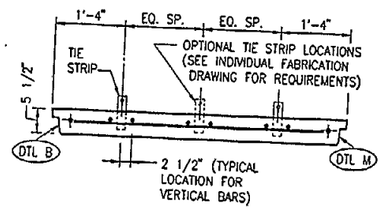

SECTION A–A

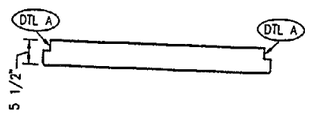

SECTION B–B

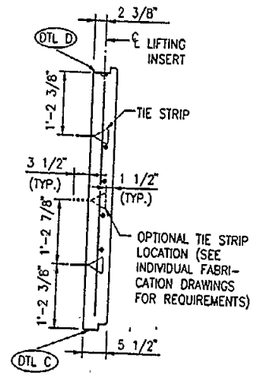

SECTION C–C

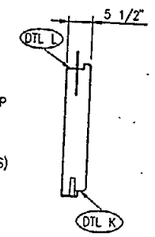

SECTION D–D

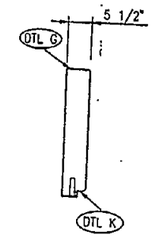

SECTION E–E

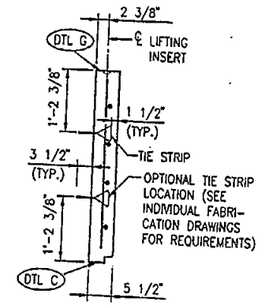

SECTION F–F

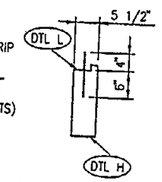

SECTION G–G

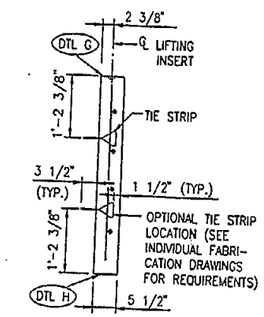

SECTION H–H

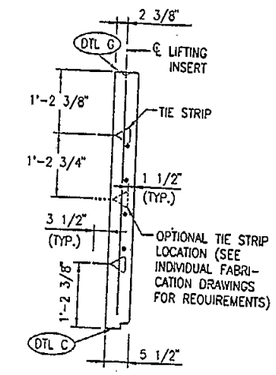

SECTION J–J

FOR LOCATION OF HORIZONTAL AND DIAGONAL REBARS SEE DETAIL S – X ON SHEET S3

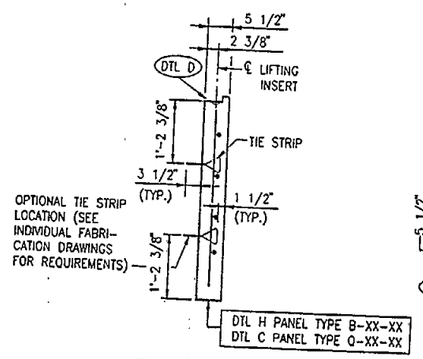

SECTION K–K

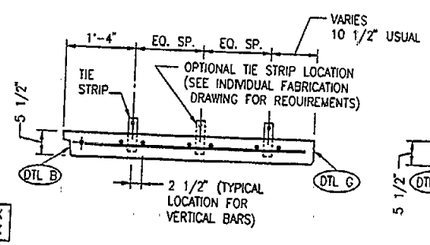

SECTION L–L

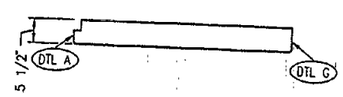

SECTION M–M

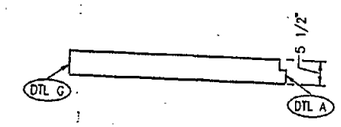

SECTION P–P

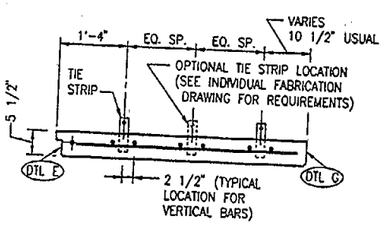

SECTION V–V

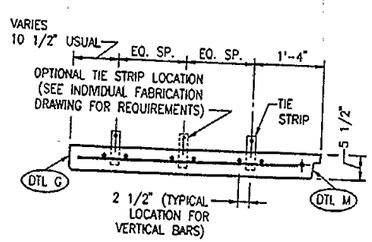

SECTION R–R

PADOT DRAWING # 94-603-BQAD

This drawing contains information proprietary to The Reinforced Earth Company, and is being furnished for the use of PENN. DOT only.
The Reinforced Earth Company is exclusive licensee in the United States under patents issued to Henri Vidal, and the furnishing of this drawing does not constitute an expressed or implied license under the Vidal patents.

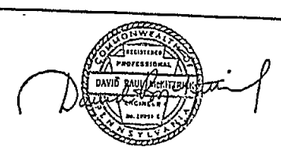

The Reinforced Earth Company
reinforced earth
8614 Westwood Center Drive
Suite 1100
Vienna, Virginia 22182
(703) 821-1175

"REINFORCED EARTH" is the registered trademark of The Reinforced Earth Company.

DESIGNED BY: PSS				PROJECT NAME	STANDARD PRECAST PANEL SHOP DRAWINGS
PROJECT ENGR: KT				LOCATION	
CHECKED BY:				OWNER	PENN. DOT
ENG. MANAGER	REV.	DATE	DESCRIPTION	DRAWING COVERS	STANDARD SHOP DRAWING SECTIONS 5 1/2" (PIN AND TAPERED RECESS)

DATE	2/16/93
CONTRACT NO.	
DRAWING NO.	S2
SCALE	3/4"=1'-0"

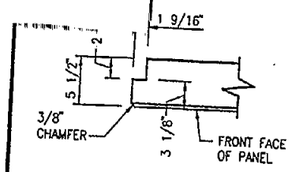

DETAIL "A"

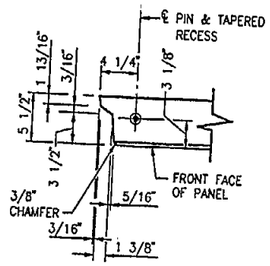

DETAIL "B"

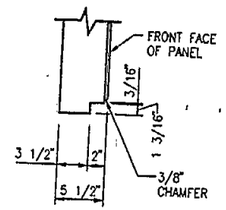

DETAIL "C"

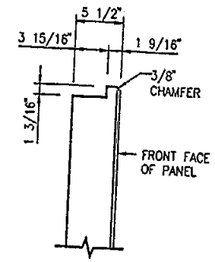

DETAIL "D"

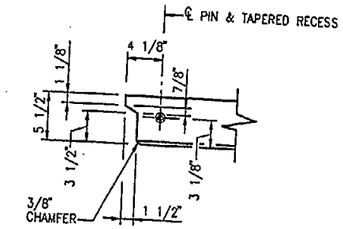

DETAIL "E"

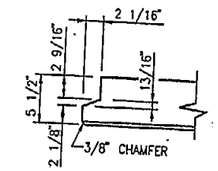

DETAIL "F"

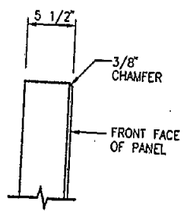

DETAIL "G"

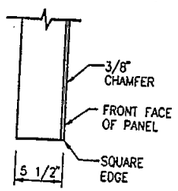

DETAIL "H"

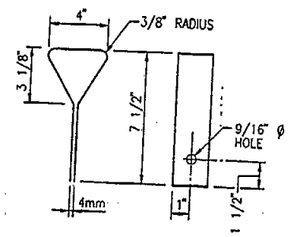

DETAIL "J"
(GENERAL NOTE No. 2)

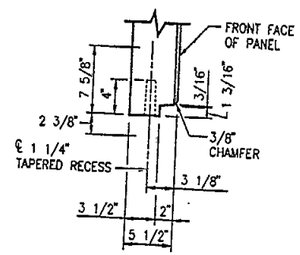

DETAIL "K"
(BOTTOM)

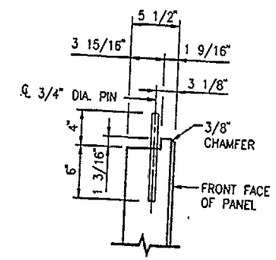

DETAIL "L"
(TOP)

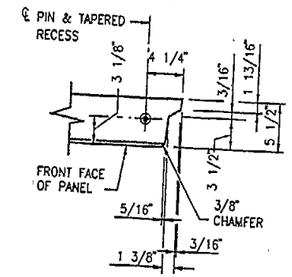

DETAIL "M"

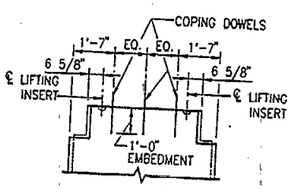

DETAIL "N"
(GENERAL NOTE No. 11)

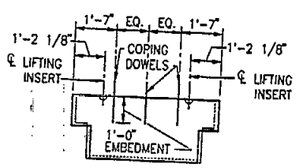

DETAIL "O"
(GENERAL NOTE No. 11)

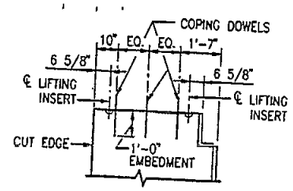

DETAIL "P"
(GENERAL NOTE No. 11)

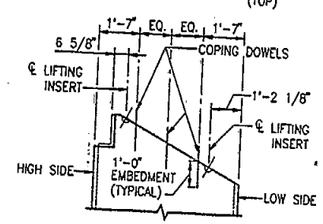

DETAIL "Q"
(GENERAL NOTE No. 11)

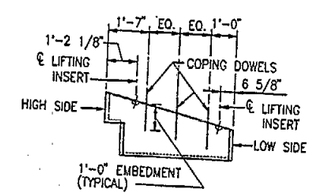

DETAIL "R"
(GENERAL NOTE No. 11)

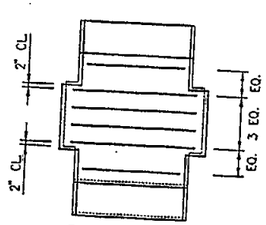

DETAIL S
(A,G,Gx,Gxx,H,Hx,Hxx,K,Kx, Kxx,L,Lx,Lxx,P,Px,Pxx,PH PHx,PHxx)

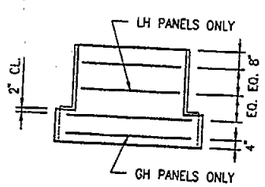

DETAIL T
(B,Bx,Bxx,GH,GHx,GHxx,KH, KHx,KHxx,LH,LHx,LHxx)

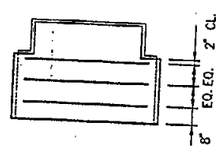

DETAIL U
(Q)

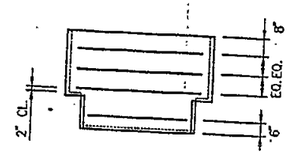

DETAIL V
(C,O,E,F)

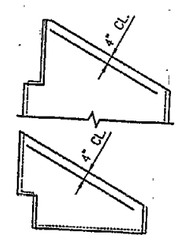

DETAIL W
(xM,xxM,xN,xxN)

FOR DIAGONAL BARS ONLY
SEE DETAIL "S" FOR
HORIZ. BAR LOCATIONS

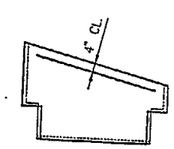

DETAIL X
(Dx,Dxx,Ex,Exx,Fx,Fxx)

FOR DIAGONAL BARS ONLY
SEE DETAIL "V" FOR
HORIZ. BAR LOCATIONS

NOTES : 1. DETAILS N – Y SHOWN BACKFACE
2. DETAILS S–X SHOW ALL POSSIBLE HORIZONTAL REBARS.
SEE INDIVIDUAL PANEL DRAWING FOR REBAR REQUIREMENTS.

PADOT DRAWING #94-603-BQAD

This drawing contains information proprietary to The Reinforced Earth Company, and is being furnished for the use of PENN. DOT only.
The Reinforced Earth Company is exclusive licensee in the United States under patents issued to Henri Vidal, and the furnishing of this drawing does not constitute an expressed or implied license under the Vidal patents.

COMMONWEALTH OF PENNSYLVANIA
REGISTERED PROFESSIONAL ENGINEER
DAVID PAUL MOUTRICH
No. 30056-E

The Reinforced Earth Company
reinforced earth
8614 Westwood Center Drive
Suite 1100
Vienna, Virginia 22182
(703) 821-1175

"REINFORCED EARTH" is the registered trademark of The Reinforced Earth Company.

DESIGNED BY:	PSS
PROJECT ENGR:	KT
CHECKED BY:	
ENG. MANAGER	

REV.	DATE	DESCRIPTION

PROJECT NAME	STANDARD PRECAST PANEL SHOP DRAWINGS	DATE 2/16/93
LOCATION		CONTRACT NO.
OWNER	PENN. DOT	DRAWING NO. S3
DRAWING COVERS	STANDARD SHOP DRAWING DETAILS 5 1/2" – (PIN AND TAPERED RECESS)	SCALE NONE

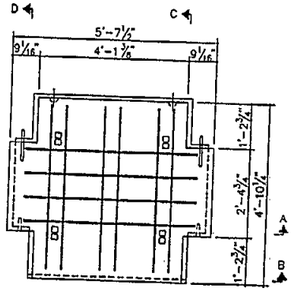

A-4-R6

NOTE: FOR LOCATION OF LIFTING INSERTS SEE DETAIL H

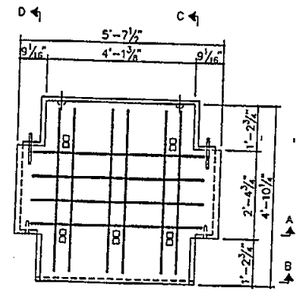

A-5-R6

NOTE: FOR LOCATION OF LIFTING INSERTS SEE DETAIL H

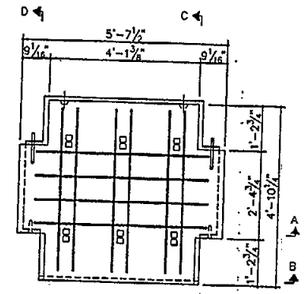

A-6-R6

NOTE: FOR LOCATION OF LIFTING INSERTS SEE DETAIL H

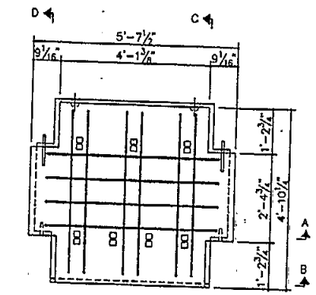

A-7-R6

NOTE: FOR LOCATION OF LIFTING INSERTS SEE DETAIL H

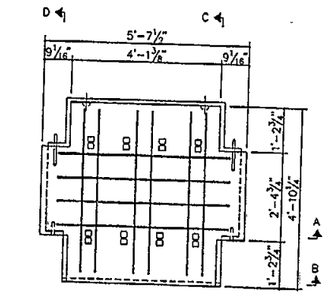

A-8-R6

NOTE: FOR LOCATION OF LIFTING INSERTS SEE DETAIL H

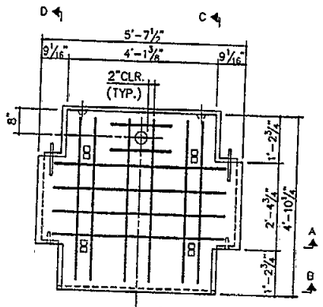

AD1-4-R6

NOTE: FOR LOCATION OF LIFTING INSERTS SEE DETAIL H

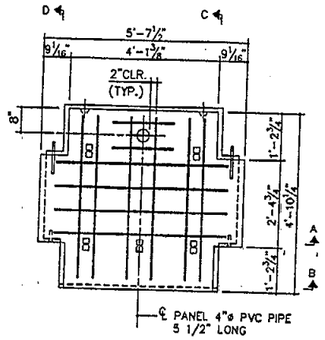

AD1-5-R6

NOTE: FOR LOCATION OF LIFTING INSERTS SEE DETAIL H

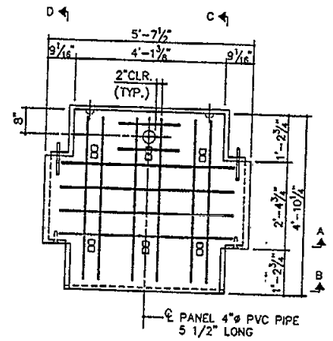

AD1-6-R6

NOTE: FOR LOCATION OF LIFTING INSERTS SEE DETAIL H

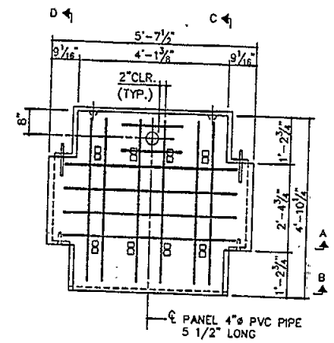

AD1-8-R6

NOTE: FOR LOCATION OF LIFTING INSERTS SEE DETAIL H

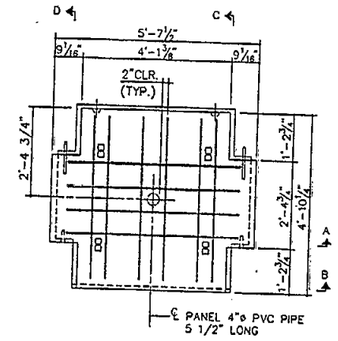

AD2-4-R6

NOTE: FOR LOCATION OF LIFTING INSERTS SEE DETAIL H

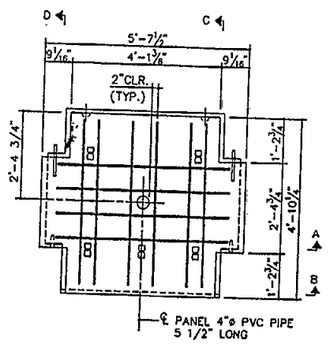

AD2-5-R6

NOTE: FOR LOCATION OF LIFTING INSERTS SEE DETAIL H

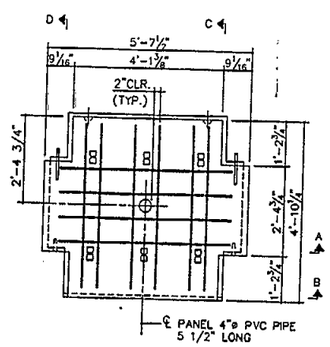

AD2-6-R6

NOTE: FOR LOCATION OF LIFTING INSERTS SEE DETAIL H

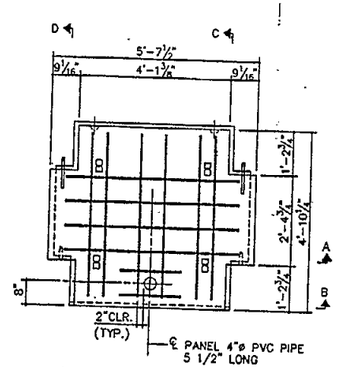

AD3-4-R6

NOTE: FOR LOCATION OF LIFTING INSERTS SEE DETAIL H

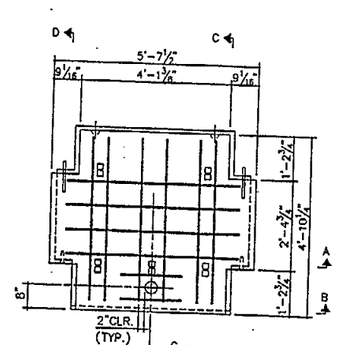

AD3-5-R6

NOTE: FOR LOCATION OF LIFTING INSERTS SEE DETAIL H

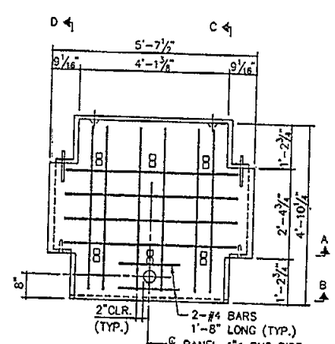

AD3-6-R6

NOTE: FOR LOCATION OF LIFTING INSERTS SEE DETAIL H

PADOT DRAWING #94-603-BQAD

NOTE: PANELS AD1, AD2, AD3 ARE WEEP HOLE PANELS.

This drawing contains information proprietary to The Reinforced Earth Company, and is being furnished for the use of PENN. DOT only.
The Reinforced Earth Company is exclusive licensee in the United States under patents issued to Henri Vidal, and the furnishing of this drawing does not constitute an expressed or implied license under the Vidal patents.

COMMONWEALTH OF PENNSYLVANIA
REGISTERED PROFESSIONAL ENGINEER
DAVID PAUL SCHAFFRICK
No. 11055-E

The Reinforced Earth Company
reinforced earth®
8614 Westwood Center Drive
Suite 1100
Vienna, Virginia 22182
(703) 821-1175

"REINFORCED EARTH" is the registered trademark of The Reinforced Earth Company.

DESIGNED BY: PSS				
PROJECT ENGR: KT				
CHECKED BY:				
ENG. MANAGER	REV.	DATE	DESCRIPTION	

PROJECT NAME	STANDARD PRECAST PANEL SHOP DRAWINGS	DATE 2/16/93
LOCATION		CONTRACT NO.
OWNER	PENN. DOT	DRAWING NO. S4
DRAWING COVERS	STANDARD PANEL SHOP DRAWINGS	SCALE 1/2"=1'-0"

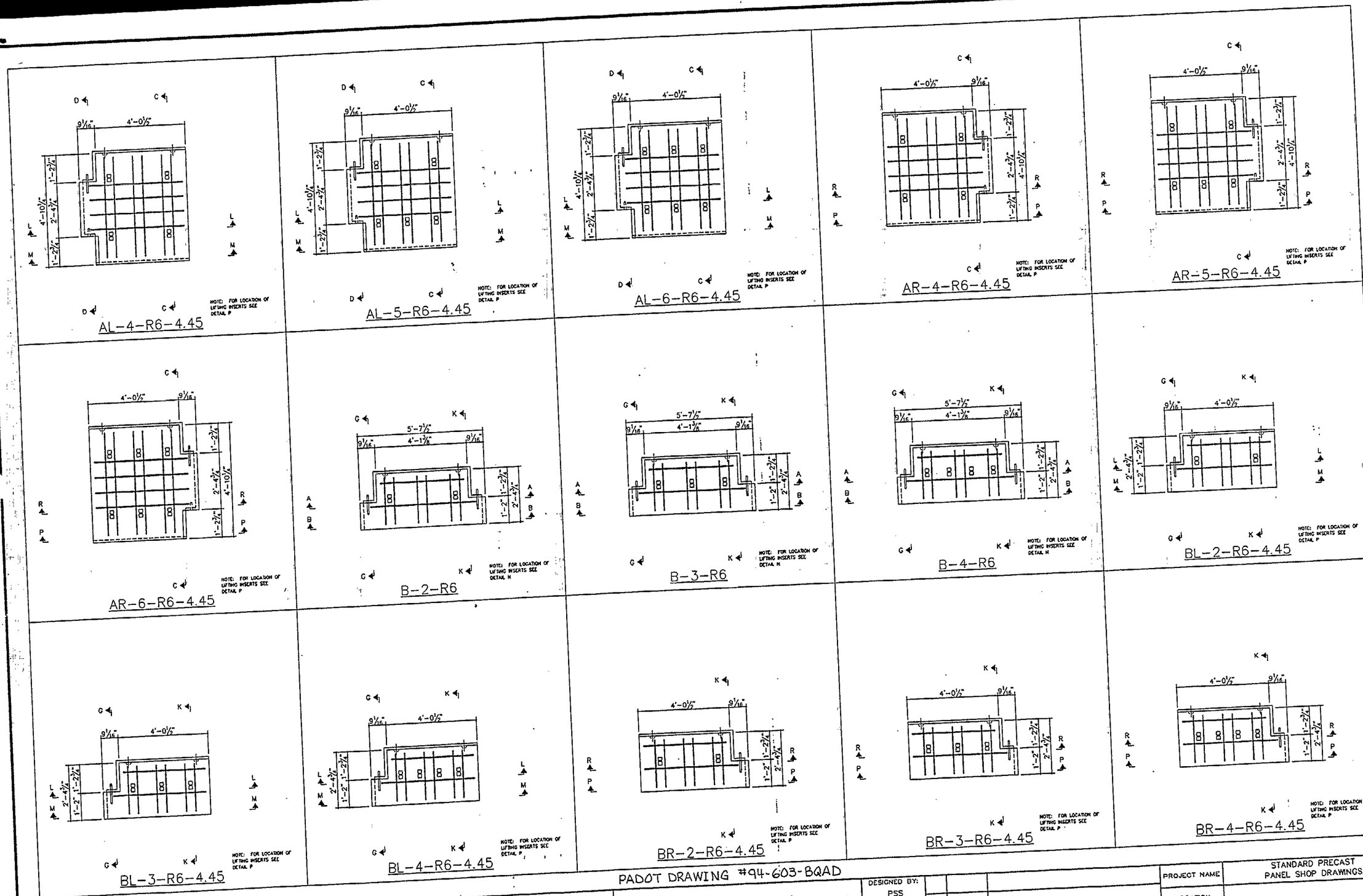

PADOT DRAWING #94-603-BQAD

This drawing contains information proprietary to The Reinforced Earth Company, and is being furnished for the use of PENN. DOT only. The Reinforced Earth Company is exclusive licensee in the United States under patents issued to Henri Vidal, and the furnishing of this drawing does not constitute an expressed or implied license under the Vidal patents.

COMMONWEALTH OF PENNSYLVANIA REGISTERED PROFESSIONAL DAVID M. PAULSON ENGINEER No. 32053-E

The Reinforced Earth Company
8614 Westwood Center Drive
Suite 1100
Vienna, Virginia 22182
(703) 821-1175

"REINFORCED EARTH" is the registered trademark of The Reinforced Earth Company.

DESIGNED BY:	PSS
PROJECT ENGR:	KT
CHECKED BY:	
ENG. MANAGER	

REV.	DATE	DESCRIPTION

PROJECT NAME	STANDARD PRECAST PANEL SHOP DRAWINGS	DATE 2/16/93
LOCATION		CONTRACT NO.
OWNER	PENN. DOT	DRAWING NO. S5
DRAWING COVERS	STANDARD PANEL SHOP DRAWINGS	SCALE 1/2"=1'-0"

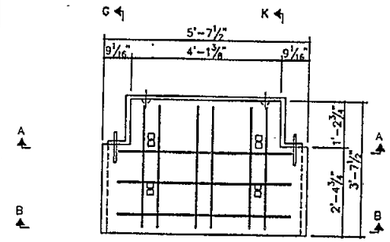

NOTE: FOR LOCATION OF LIFTING INSERTS SEE DETAIL N

Q-4-R6

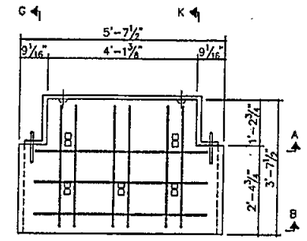

NOTE: FOR LOCATION OF LIFTING INSERTS SEE DETAIL N

Q-5-R6

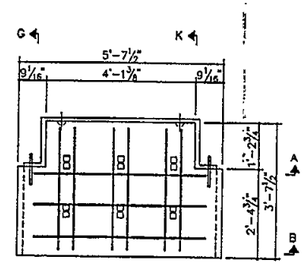

NOTE: FOR LOCATION OF LIFTING INSERTS SEE DETAIL N

Q-6-R6

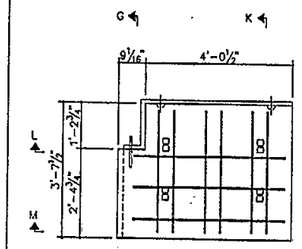

NOTE: FOR LOCATION OF LIFTING INSERTS SEE DETAIL P

QL-4-R6-4.45

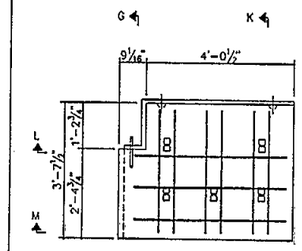

NOTE: FOR LOCATION OF LIFTING INSERTS SEE DETAIL P

QL-5-R6-4.45

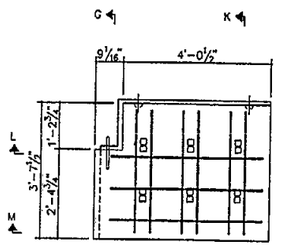

NOTE: FOR LOCATION OF LIFTING INSERTS SEE DETAIL P

QL-6-R6-4.45

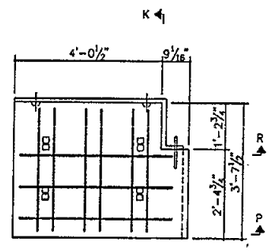

NOTE: FOR LOCATION OF LIFTING INSERTS SEE DETAIL P

QR-4-R6-4.45

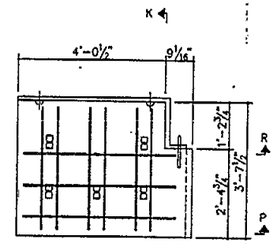

NOTE: FOR LOCATION OF LIFTING INSERTS SEE DETAIL P

QR-5-R6-4.45

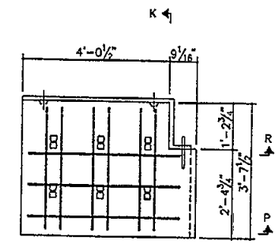

NOTE: FOR LOCATION OF LIFTING INSERTS SEE DETAIL P

QR-6-R6-4.45

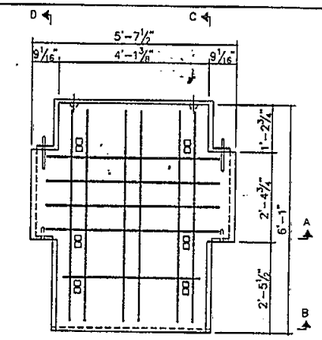

NOTE: FOR LOCATION OF LIFTING INSERTS SEE DETAIL N

P-6-R6

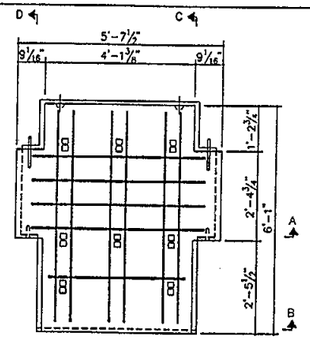

NOTE: FOR LOCATION OF LIFTING INSERTS SEE DETAIL N

P-8-R6

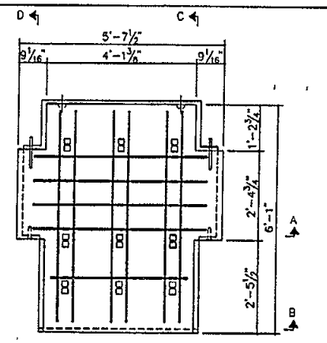

NOTE: FOR LOCATION OF LIFTING INSERTS SEE DETAIL N

P-9-R6

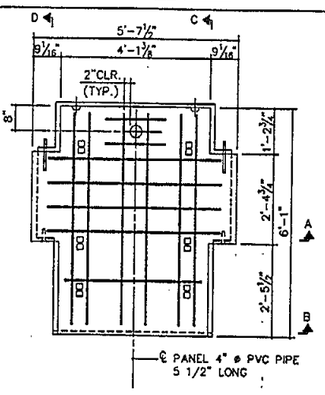

NOTE: FOR LOCATION OF LIFTING INSERTS SEE DETAIL N

PD1-6-R6

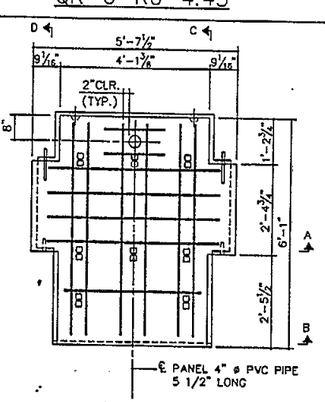

NOTE: FOR LOCATION OF LIFTING INSERTS SEE DETAIL N

PD1-8-R6

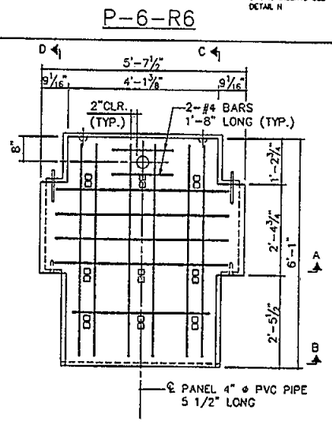

NOTE: FOR LOCATION OF LIFTING INSERTS SEE DETAIL N

PD1-9-R6

PADOT DRAWING #94-603-BQAD

NOTE: PANEL PD1 ARE WEEP HOLE PANELS

This drawing contains information proprietary to The Reinforced Earth Company, and is being furnished for the use of PENN. DOT only. The Reinforced Earth Company is exclusive licensee in the United States under patents issued to Henri Vidal, and the furnishing of this drawing does not constitute an expressed or implied license under the Vidal patents.

COMMONWEALTH OF PENNSYLVANIA REGISTERED PROFESSIONAL ENGINEER DAVID PARK HARRINGTON No. 19916-E

The Reinforced Earth Company
reinforced earth®
8614 Westwood Center Drive
Suite 1100
Vienna, Virginia 22182
(703) 821-1175

"REINFORCED EARTH" is the registered trademark of The Reinforced Earth Company.

DESIGNED BY:	PSS
PROJECT ENGR:	KT
CHECKED BY:	CJP
ENG. MANAGER	CJP

REV.	DATE	DESCRIPTION

PROJECT NAME	STANDARD PRECAST SHOP DRAWINGS	DATE 2/16/93
LOCATION		CONTRACT NO.
OWNER	PENN. DOT	DRAWING NO. S6
DRAWING COVERS	STANDARD PANEL SHOP DRAWINGS	SCALE 1/2"=1'-0"

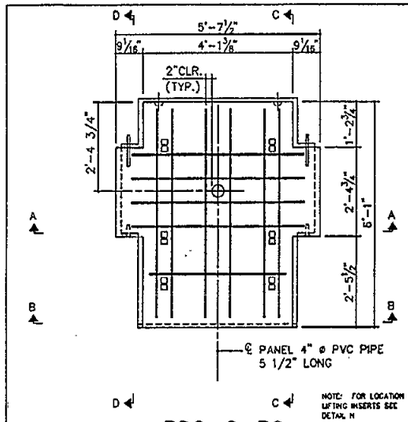

NOTE: FOR LOCATION OF LIFTING INSERTS SEE DETAIL N

PD2-6-R6

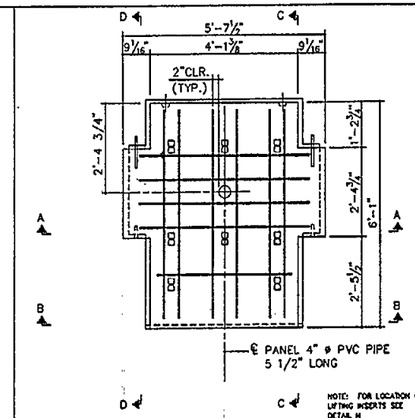

NOTE: FOR LOCATION OF LIFTING INSERTS SEE DETAIL N

PD2-8-R6

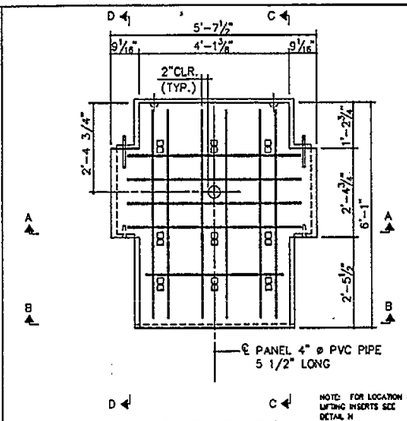

NOTE: FOR LOCATION OF LIFTING INSERTS SEE DETAIL N

PD2-9-R6

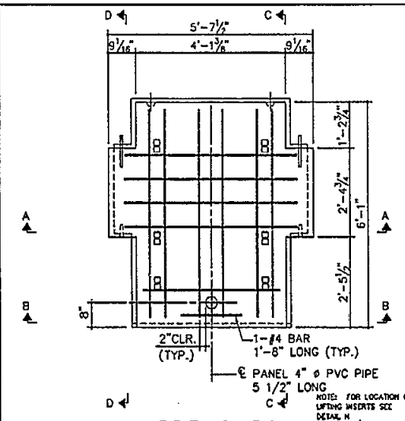

NOTE: FOR LOCATION OF LIFTING INSERTS SEE DETAIL N

PD3-6-R6

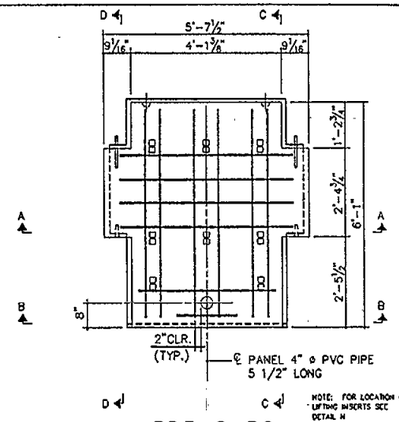

NOTE: FOR LOCATION OF LIFTING INSERTS SEE DETAIL N

PD3-8-R6

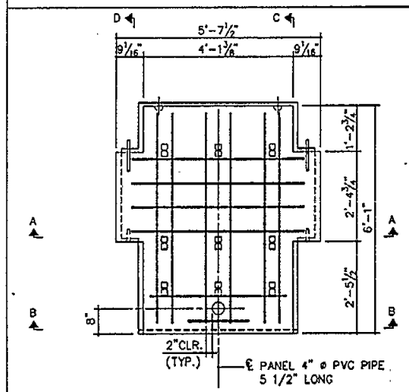

NOTE: FOR LOCATION OF LIFTING INSERTS SEE DETAIL N

PD3-9-R6

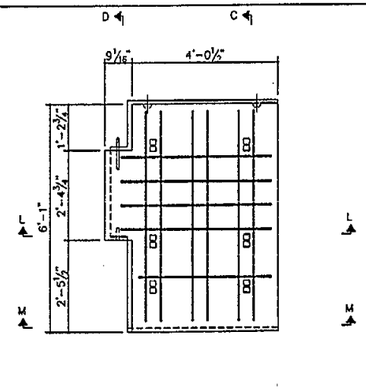

NOTE: FOR LOCATION OF LIFTING INSERTS SEE DETAIL P

PL-6-R6-4.45

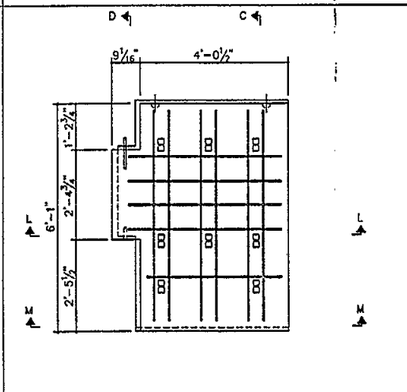

NOTE: FOR LOCATION OF LIFTING INSERTS SEE DETAIL P

PL-8-R6-4.45

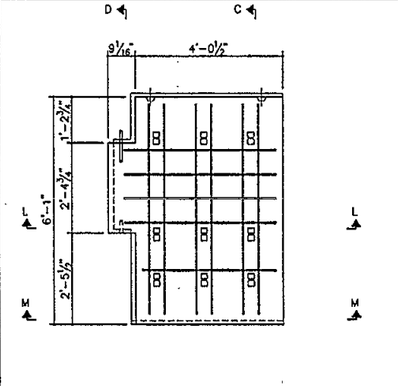

NOTE: FOR LOCATION OF LIFTING INSERTS SEE DETAIL P

PL-9-R6-4.45

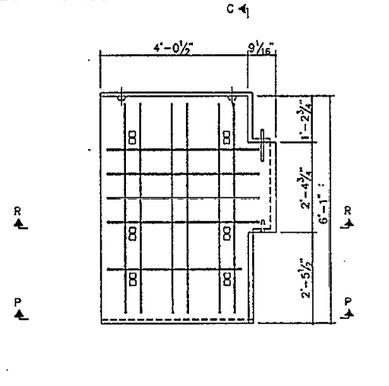

NOTE: FOR LOCATION OF LIFTING INSERTS SEE DETAIL P

PR-6-R6-4.45

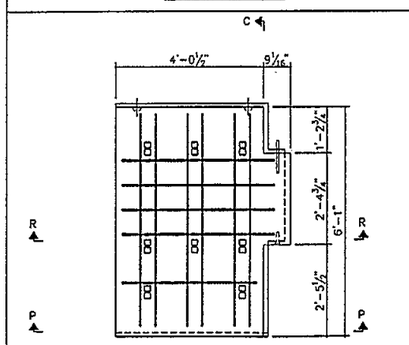

NOTE: FOR LOCATION OF LIFTING INSERTS SEE DETAIL P

PR-8-R6-4.45

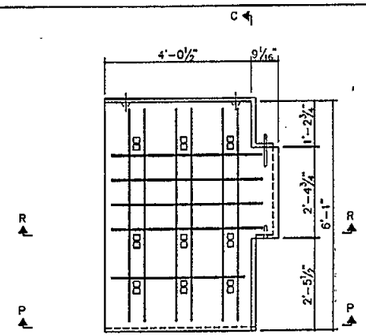

NOTE: FOR LOCATION OF LIFTING INSERTS SEE DETAIL P

PR-9-R6-4.45

PADOT DRAWING #94-603-BQAD

NOTE: PANELS PD2, PD3 ARE WEEP HOLE PANELS.

This drawing contains information proprietary to The Reinforced Earth Company, and is being furnished for the use of PENN. DOT only.
The Reinforced Earth Company is exclusive licensee in the United States under patents issued to Henri Vidal, and the furnishing of this drawing does not constitute an expressed or implied license under the Vidal patents.

COMMONWEALTH OF PENNSYLVANIA REGISTERED PROFESSIONAL DAVID PAUL McKITTRICK

The Reinforced Earth Company
reinforced earth®
8614 Westwood Center Drive
Suite 1100
Vienna, Virginia 22182
(703) 821-1175

"REINFORCED EARTH" is the registered trademark of The Reinforced Earth Company.

DESIGNED BY:	PSS
PROJECT ENGR:	KT
CHECKED BY:	
ENG. MANAGER	

REV.	DATE	DESCRIPTION

PROJECT NAME	STANDARD PRECAST PANEL SHOP DRAWINGS	DATE 2/16/93
LOCATION		CONTRACT NO.
OWNER	PENN. DOT	
DRAWING COVERS	STANDARD PANEL SHOP DRAWINGS	

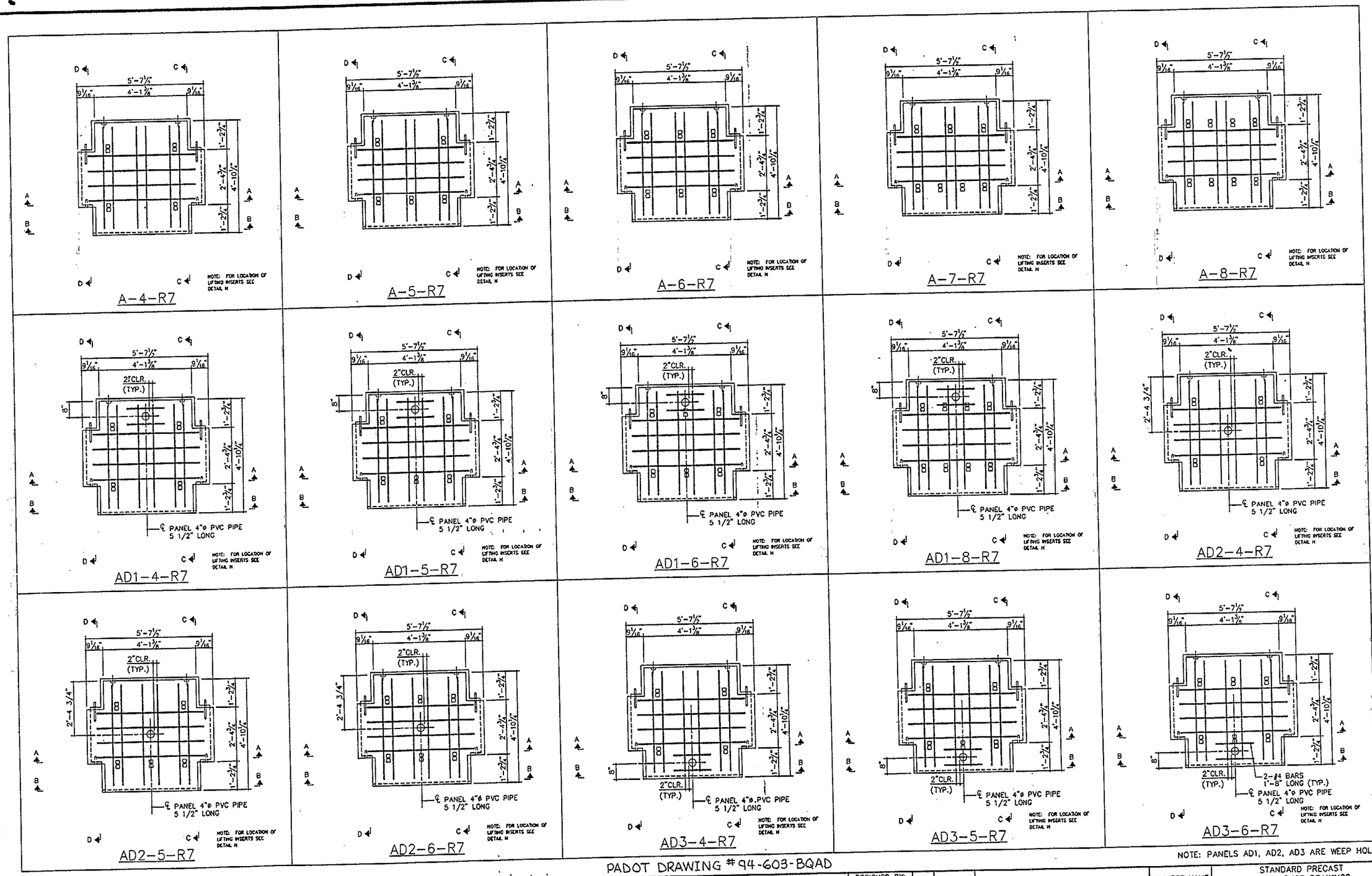

NOTE: PANELS AD1, AD2, AD3 ARE WEEP HOLE PANELS.

PADOT DRAWING #94-603-BQAD

This drawing contains information proprietary to The Reinforced Earth Company, and is being furnished for the use of PENN. DOT only.
The Reinforced Earth Company is exclusive licensee in the United States under patents issued to Henri Vidal, and the furnishing of this drawing does not constitute an expressed or implied license under the Vidal patents.

COMMONWEALTH OF PENNSYLVANIA REGISTERED PROFESSIONAL ENGINEER DAVID P. HALL

The Reinforced Earth Company
reinforced earth®
8614 Westwood Center Drive
Suite 1100
Vienna, Virginia 22182
(703) 821-1175

"REINFORCED EARTH" is the registered trademark of The Reinforced Earth Company.

DESIGNED BY:	PSS
PROJECT ENGR:	KT
CHECKED BY:	
ENG. MANAGER	

REV.	DATE	DESCRIPTION

PROJECT NAME	STANDARD PRECAST PANEL SHOP DRAWINGS	DATE 2/16/93
LOCATION		CONTRACT NO.
OWNER	PENN. DOT	DRAWING NO. S8
DRAWING COVERS	STANDARD PANEL SHOP DRAWINGS	SCALE 1/2"=1'-0"

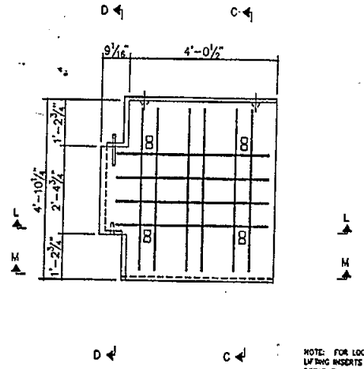

NOTE: FOR LOCATION OF LIFTING INSERTS SEE DETAIL P

AL-4-R7-4.45

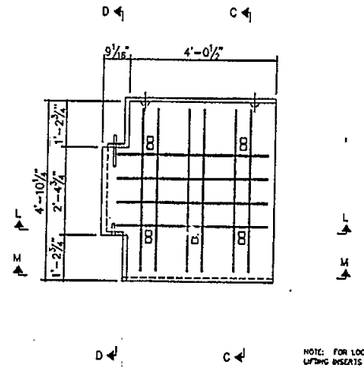

NOTE: FOR LOCATION OF LIFTING INSERTS SEE DETAIL P

AL-5-R7-4.45

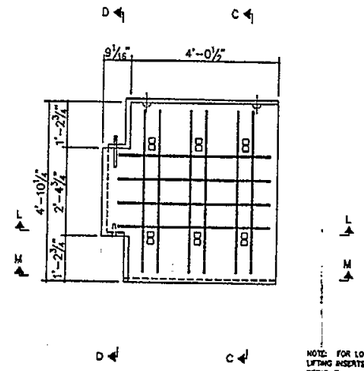

NOTE: FOR LOCATION OF LIFTING INSERTS SEE DETAIL P

AL-6-R7-4.45

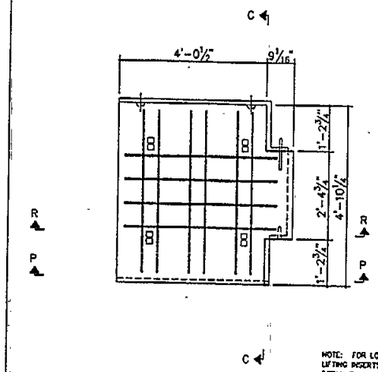

NOTE: FOR LOCATION OF LIFTING INSERTS SEE DETAIL P

AR-4-R7-4.45

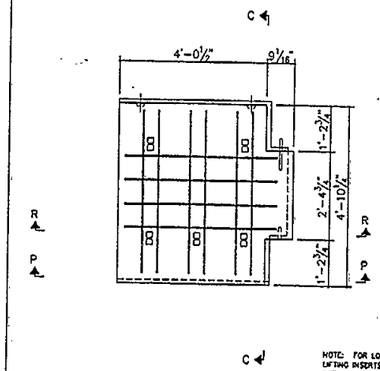

NOTE: FOR LOCATION OF LIFTING INSERTS SEE DETAIL P

AR-5-R7-4.45

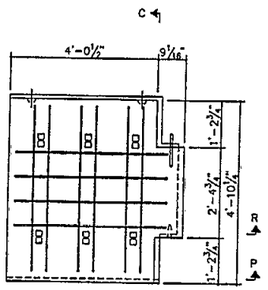

NOTE: FOR LOCATION OF LIFTING INSERTS SEE DETAIL P

AR-6-R7-4.45

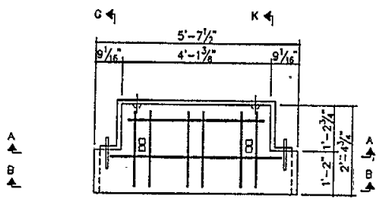

NOTE: FOR LOCATION OF LIFTING INSERTS SEE DETAIL N

B-2-R7

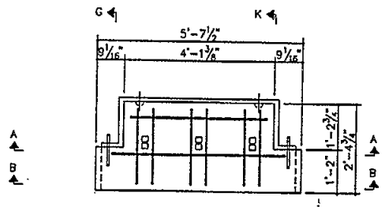

NOTE: FOR LOCATION OF LIFTING INSERTS SEE DETAIL N

B-3-R7

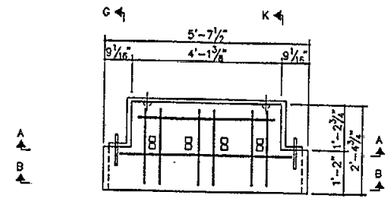

NOTE: FOR LOCATION OF LIFTING INSERTS SEE DETAIL N

B-4-R7

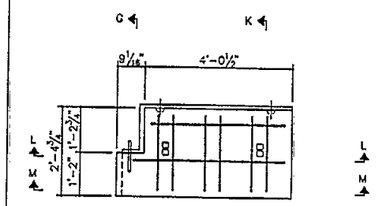

NOTE: FOR LOCATION OF LIFTING INSERTS SEE DETAIL P

BL-2-R7-4.45

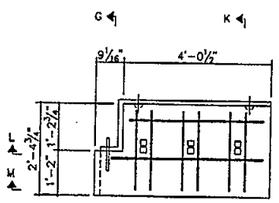

NOTE: FOR LOCATION OF LIFTING INSERTS SEE DETAIL P

BL-3-R7-4.45

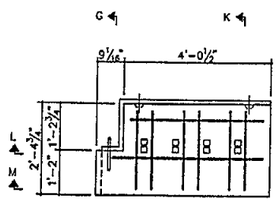

NOTE: FOR LOCATION OF LIFTING INSERTS SEE DETAIL P

BL-4-R7-4.45

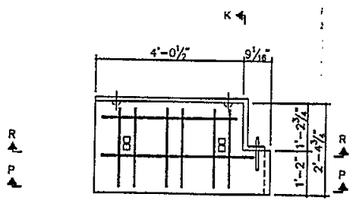

NOTE: FOR LOCATION OF LIFTING INSERTS SEE DETAIL P

BR-2-R7-4.45

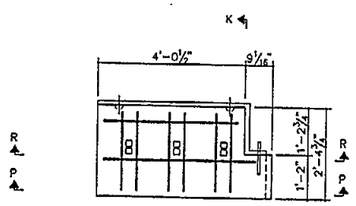

NOTE: FOR LOCATION OF LIFTING INSERTS SEE DETAIL P

BR-3-R7-4.45

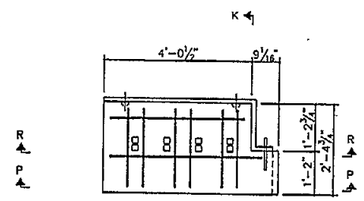

NOTE: FOR LOCATION OF LIFTING INSERTS SEE DETAIL P

BR-4-R7-4.45

PADOT DRAWING #94-603-BQAD

This drawing contains information proprietary to The Reinforced Earth Company, and is being furnished for the use of PENN. DOT only. The Reinforced Earth Company is exclusive licensee in the United States under patents issued to Henri Vidal, and the furnishing of this drawing does not constitute an expressed or implied license under the Vidal patents.

COMMONWEALTH OF PENNSYLVANIA REGISTERED PROFESSIONAL DAVID PAUL HEDRICK ENGINEER No. 15799-E

The Reinforced Earth Company
reinforced earth®
8614 Westwood Center Drive
Suite 1100
Vienna, Virginia 22182
(703) 821-1175

"REINFORCED EARTH" is the registered trademark of The Reinforced Earth Company.

DESIGNED BY:	PSS
PROJECT ENGR:	KT
CHECKED BY:	
ENG. MANAGER	

REV.	DATE	DESCRIPTION

PROJECT NAME	STANDARD PRECAST PANEL SHOP DRAWINGS	DATE 2/16/93
LOCATION		CONTRACT NO.
OWNER	PENN. DOT	DRAWING NO. S9
DRAWING COVERS	STANDARD PANEL SHOP DRAWINGS	SCALE 1/2"=1'-0"

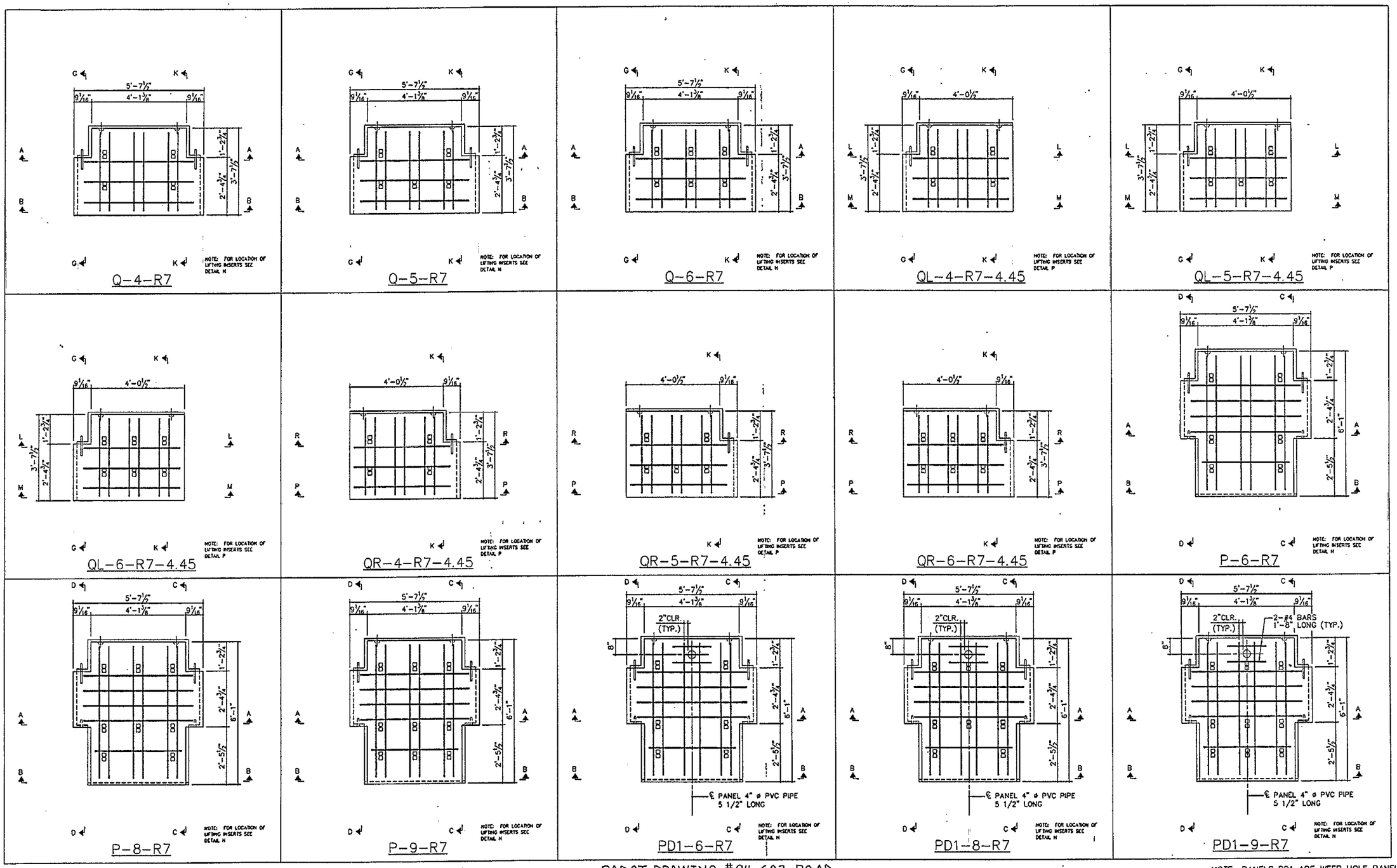

PADOT DRAWING #94-603-BQAD

NOTE: PANELS PD1 ARE WEEP HOLE PANELS.

This drawing contains information proprietary to The Reinforced Earth Company, and is being furnished for the use of PENN. DOT only.
The Reinforced Earth Company is exclusive licensee in the United States under patents issued to Henri Vidal, and the furnishing of this drawing does not constitute an expressed or implied license under the Vidal patents.

COMMONWEALTH OF PENNSYLVANIA REGISTERED PROFESSIONAL DAVID PAUL MONTFERRICK ENGINEER No. 19386-E

The Reinforced Earth Company
reinforced earth®
8614 Westwood Center Drive
Suite 1100
Vienna, Virginia 22182
(703) 821-1175

"REINFORCED EARTH" is the registered trademark of The Reinforced Earth Company.

DESIGNED BY:	PSS
PROJECT ENGR:	KT
CHECKED BY:	
ENG. MANAGER	

REV.	DATE	DESCRIPTION

PROJECT NAME	STANDARD PRECAST PANEL SHOP DRAWINGS	DATE 2/16/93
LOCATION		CONTRACT NO.
OWNER	PENN. DOT	DRAWING NO. S10
DRAWING COVERS	STANDARD PANEL SHOP DRAWINGS	SCALE 1/2"=1'-0"

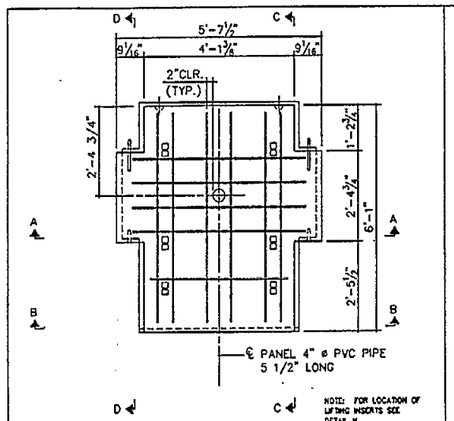

PD2-6-R7

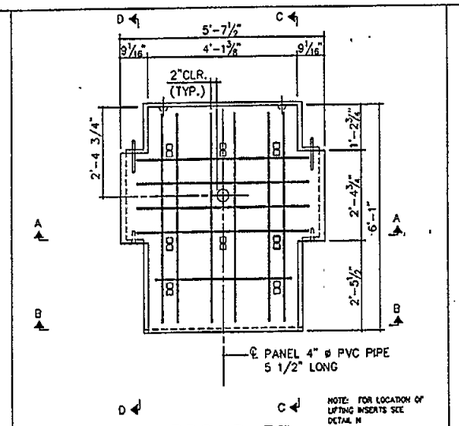

PD2-8-R7

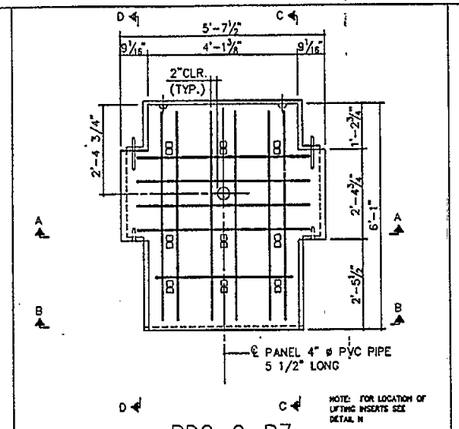

PD2-9-R7

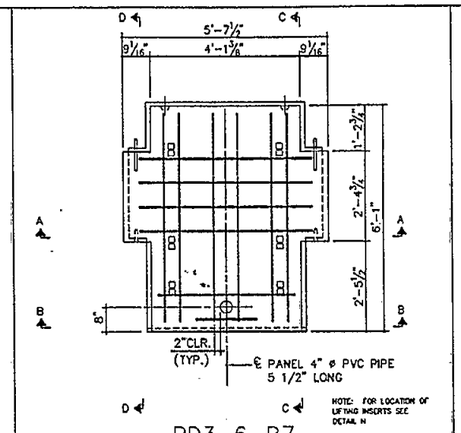

PD3-6-R7

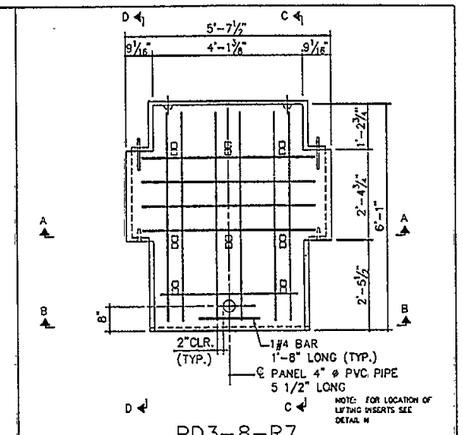

PD3-8-R7

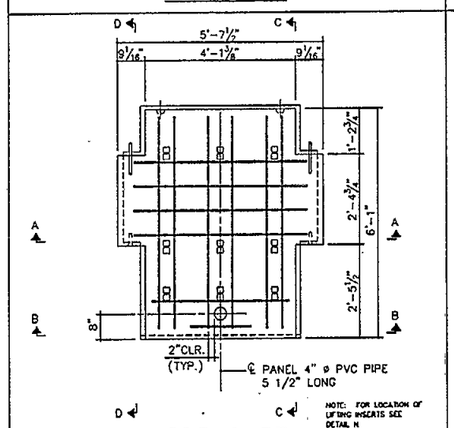

PD3-9-R7

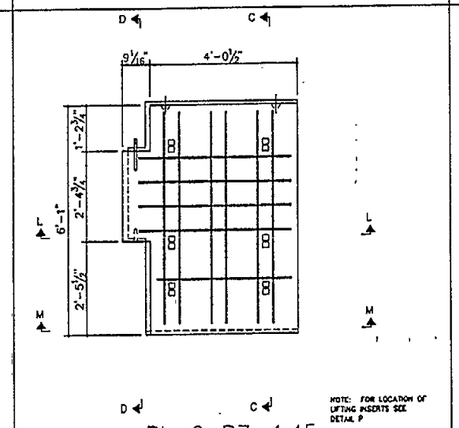

PL-6-R7-4.45

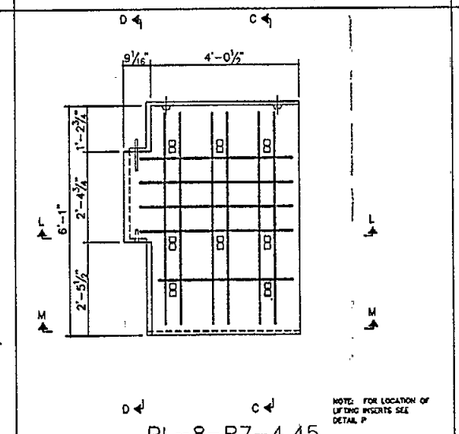

PL-8-R7-4.45

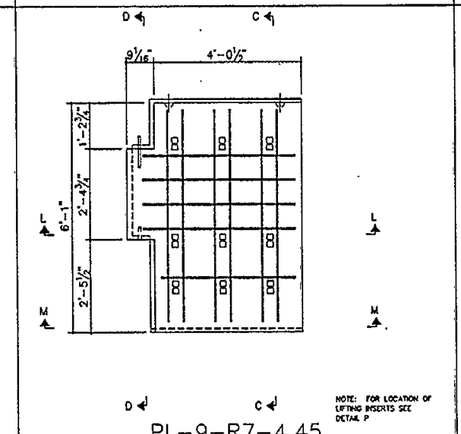

PL-9-R7-4.45

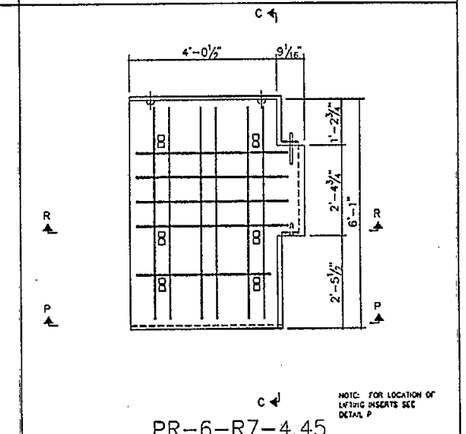

PR-6-R7-4.45

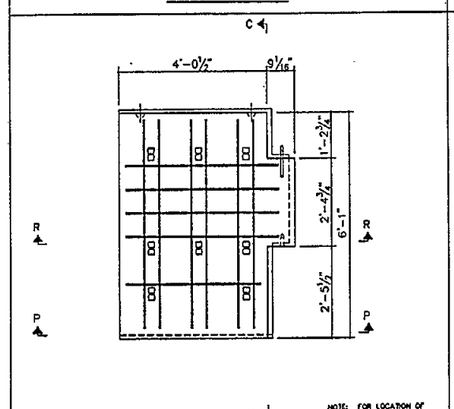

PR-8-R7-4.45

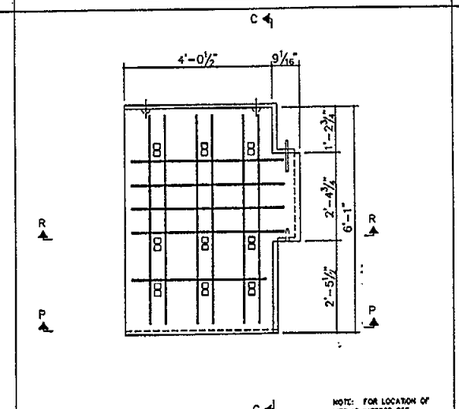

PR-9-R7-4.45

PADOT DRAWING #94-603-BQAD

NOTE: PANELS PD2, PD3 ARE WEEP HOLE PANELS.

This drawing contains information proprietary to The Reinforced Earth Company, and is being furnished for the use of PENN. DOT only.
The Reinforced Earth Company is exclusive licensee in the United States under patents issued to Henri Vidal, and the furnishing of this drawing does not constitute an expressed or implied license under the Vidal patents.

COMMONWEALTH OF PENNSYLVANIA REGISTERED PROFESSIONAL ENGINEER DAVID P. GUSTAFSON

The Reinforced Earth Company
reinforced earth
8614 Westwood Center Drive
Suite 1100
Vienna, Virginia 22182
(703) 821-1175

"REINFORCED EARTH" is the registered trademark of The Reinforced Earth Company.

DESIGNED BY:	PSS
PROJECT ENGR:	KT
CHECKED BY:	
ENG. MANAGER	

REV.	DATE	DESCRIPTION

PROJECT NAME	STANDARD PRECAST PANEL SHOP DRAWINGS	DATE 2/16/93
LOCATION		CONTRACT NO.
OWNER	PENN. DOT	DRAWING NO. S11
DRAWING COVERS	STANDARD PANEL SHOP DRAWINGS	SCALE 1/2"=1'-0"

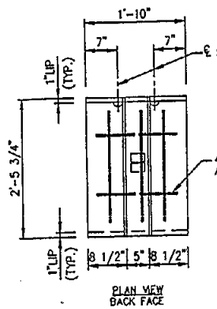

JB-1-R3

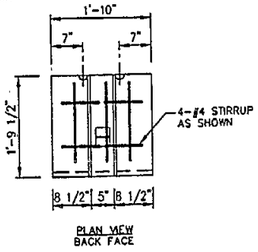

JC-1-R3

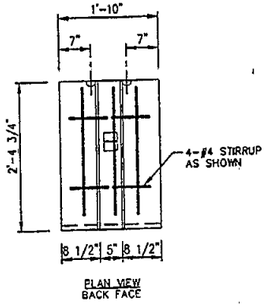

JD-1-R3

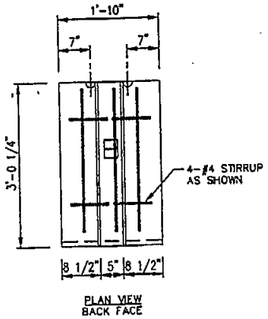

JE-1-R3

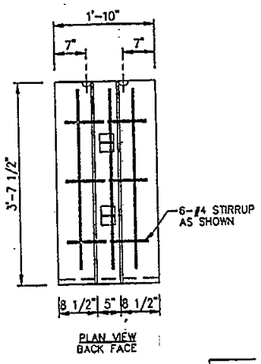

JF-2-R3

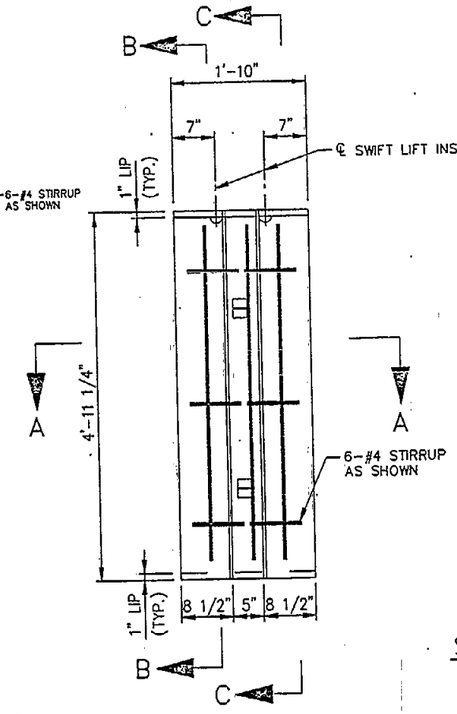

PLAN VIEW
BACK FACE

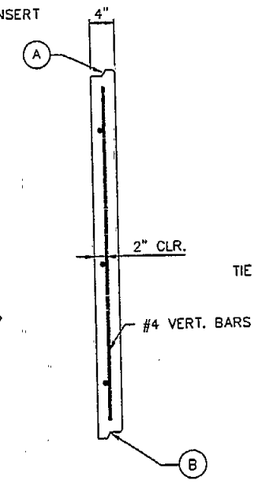

SECTION B-B
SCALE: 1"=1'-0"

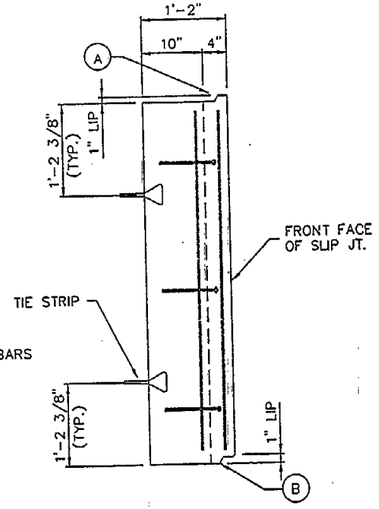

SECTION C-C
SCALE: 1"=1'-0"

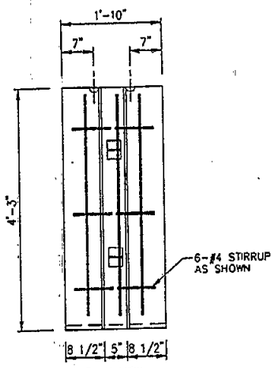

JG-2-R3

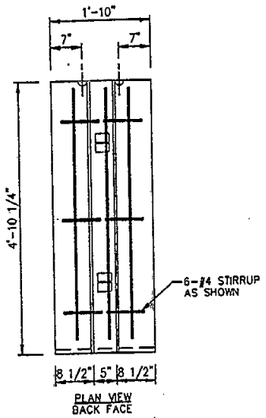

JH-2-R3

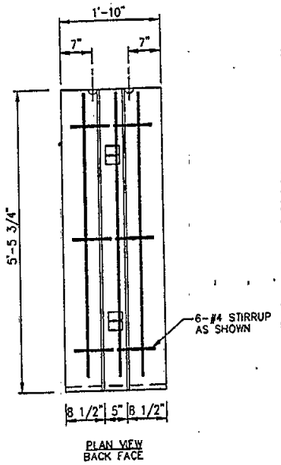

JK-2-R3

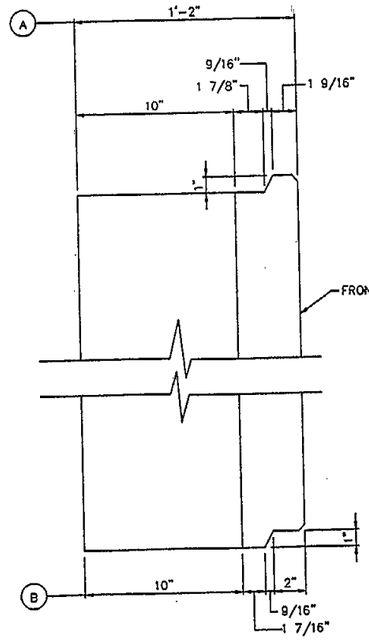

TYPICAL JOINT DETAIL
N.T.S.

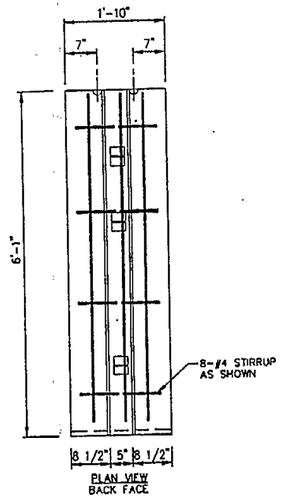

JL-3-R3

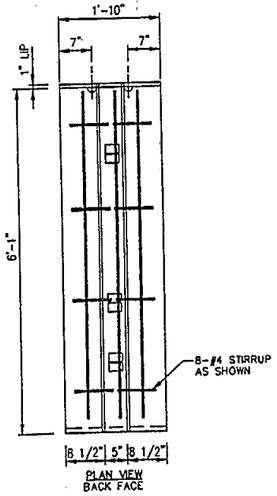

JP-3-R3

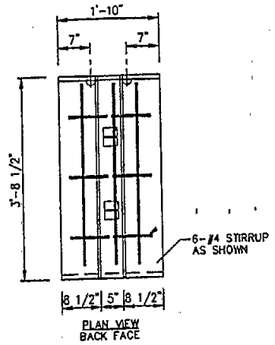

JQ-2-R3

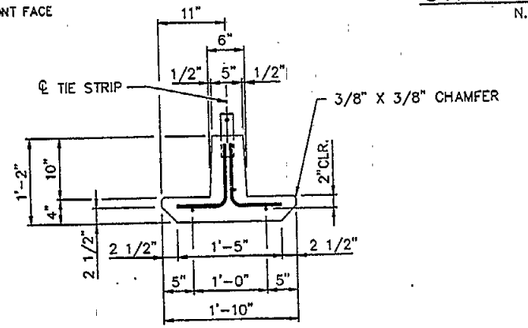

SECTION A-A
SCALE: 1" = 1'-0"

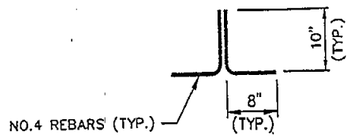

STIRRUP DETAIL
N.T.S.

LEGEND

JA-2-R3
- NO. VERTICAL BARS
- NO. OF TIE STRIPS
- PANEL TYPE

MATERIALS LIST SHOWN IS FOR INFORMATION ONLY AND APPLIES TO PANEL "JA-2-R3".		
SWIFT LIFT INSERTS	2	3/8"x3/8" LONG
STIRRUPS	6	NO.4 1'-6" LONG
TIE STRIPS	2	SEE ST'D DETAIL SHT. S3
VERTICAL BARS	3	NO.4 4'-6" LONG
CONCRETE	.17 C.Y.	f'c 4000 P.S.I.
PANEL TYPE "JA"	SEE SUM.	SURFACE AREA 4.6 SQ.FT.
ITEM	QUANTITY	REMARKS
LIST OF MATERIALS		
PIECE MARK: JA-2-R3		

PADOT DRAWING #94-603-BQAD

This drawing contains information proprietary to The Reinforced Earth Company, and is being furnished for the use of PENN. DOT only. The Reinforced Earth Company is exclusive licensee in the United States under patents issued to Henri Vidal, and the furnishing of this drawing does not constitute an expressed or implied license under the Vidal patents.

COMMONWEALTH OF PENNSYLVANIA REGISTERED PROFESSIONAL DAVID PAUL SCUTTI REGISTRATION No. 29659-E

The Reinforced Earth Company
reinforced earth®
8614 Westwood Center Drive
Suite 1100
Vienna, Virginia 22182
(703) 821-1175

"REINFORCED EARTH" is the registered trademark of The Reinforced Earth Company.

DESIGNED BY:	PSS
PROJECT ENGR:	KT
CHECKED BY:	CJP
ENG. MANAGER	CJP

REV.	DATE	DESCRIPTION

PROJECT NAME	STANDARD PRECAST PANEL SHOP DRAWINGS	DATE 2/16/93
LOCATION		CONTRACT NO.
OWNER	PENN. DOT	DRAWING NO. S12
DRAWING COVERS	SLIP JOINT COVER	SCALE AS SHOWN

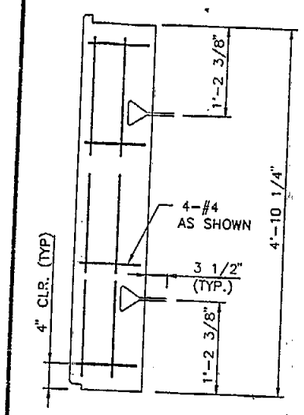

CE1A-2-R4

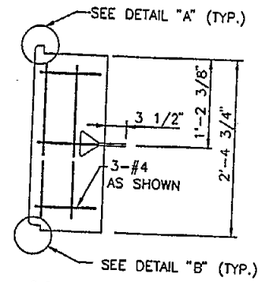

CE1B-1-R4

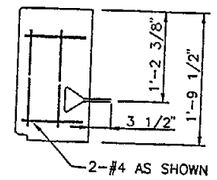

CE1C-1-R4

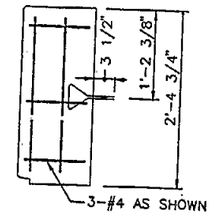

CE1D-1-R4

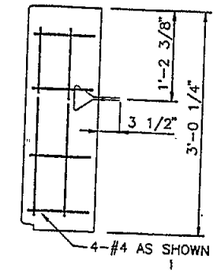

CE1E-2-R4

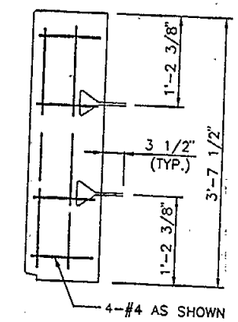

CE1F-2-R4

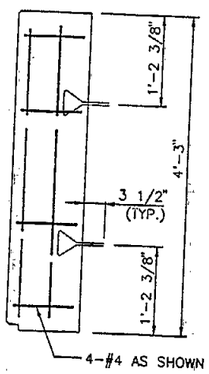

CE1G-2-R4

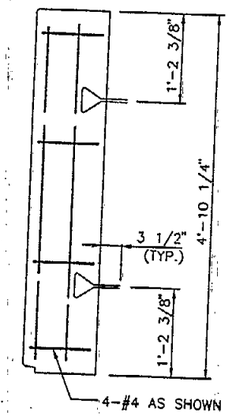

CE1H-2-R4

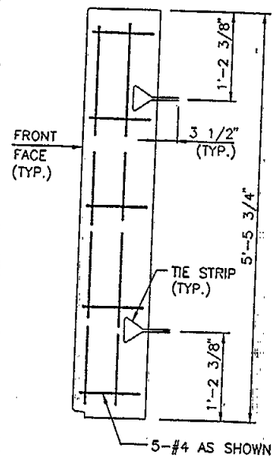

CE1K-2-R4

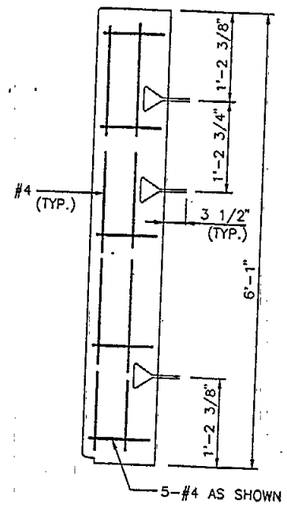

CE1L-3-R4

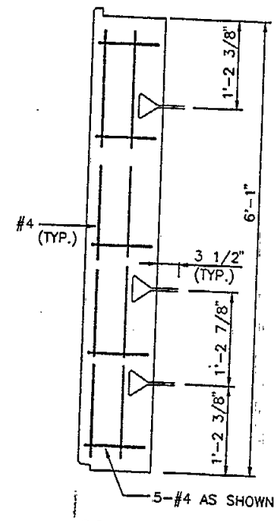

CE1P-3-R4

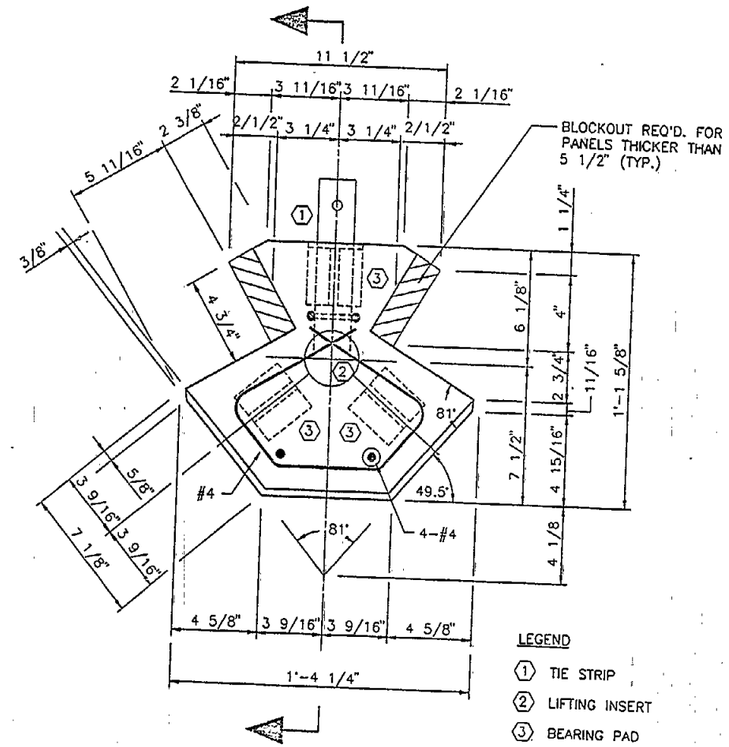

CORNER ELEMENT TYPE 1 (63°± - 90°±)

SCALE: 3" = 1'- 0"

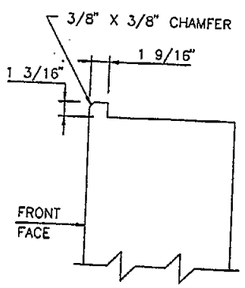

DETAIL "A"

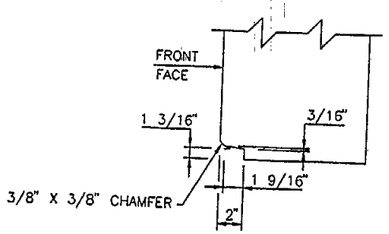

DETAIL "B"

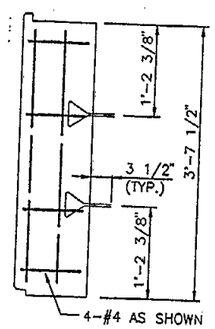

CE1Q-2-R4

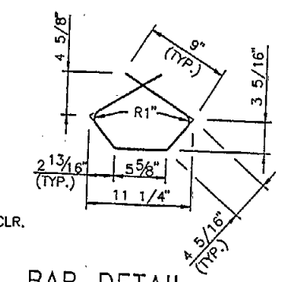

NOTE: 1 1/2" MIN.CLR. ON ALL REBAR.

BAR DETAIL

SCALE: 1 1/2" = 1'-0"

(DIMENSIONS SHOWN ARE OUT TO OUT)

KEY TO PIECE MARK

CE1A-2-R4

- PANEL REINFORCEMENT
- NO. OF TIE STRIPS
- PANEL HEIGHT
- TYPE
- CORNER ELEMENT

PADOT DRAWING #94-603-BQAD

This drawing contains information proprietary to The Reinforced Earth Company, and is being furnished for the use of PENN. DOT only. The Reinforced Earth Company is exclusive licensee in the United States under patents issued to Henri Vidal, and the furnishing of this drawing does not constitute an expressed or implied license under the Vidal patents.

COMMONWEALTH OF PENNSYLVANIA REGISTERED PROFESSIONAL DAVID PAUL MENTZER ENGINEER

The Reinforced Earth Company
reinforced earth
8614 Westwood Center Drive
Suite 1100
Vienna, Virginia 22182
(703) 821-1175

"REINFORCED EARTH" is the registered trademark of The Reinforced Earth Company.

DESIGNED BY: PSS				PROJECT NAME	STANDARD PRECAST PANEL SHOP DRAWINGS	DATE 2/16/93
PROJECT ENGR: KT				LOCATION		CONTRACT NO.
CHECKED BY:				OWNER	PENN. DOT	DRAWING NO. S13
ENG. MANAGER	REV.	DATE	DESCRIPTION	DRAWING COVERS	CORNER ELEMENT TYPE "CE1"	SCALE AS SHOWN

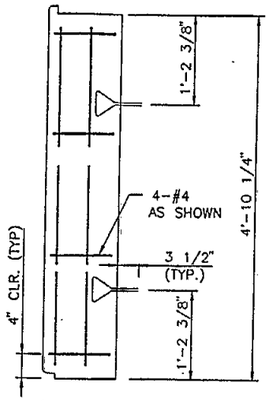

CE2A-2-R4

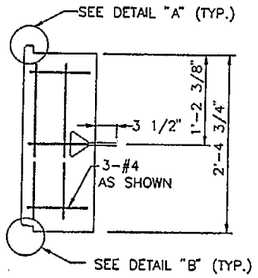

CE2B-1-R4

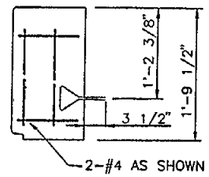

CE2C-1-R4

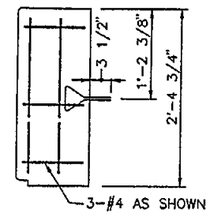

CE2D-1-R4

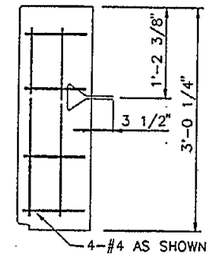

CE2E-2-R4

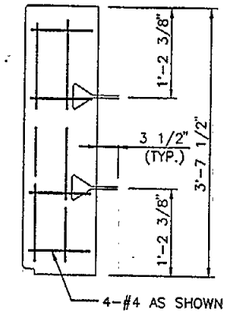

CE2F-2-R4

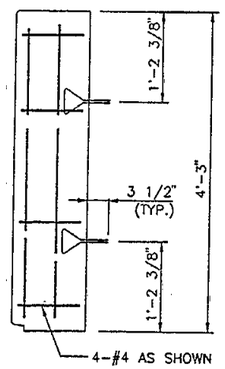

CE2G-2-R4

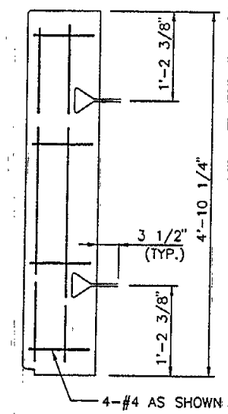

CE2H-2-R4

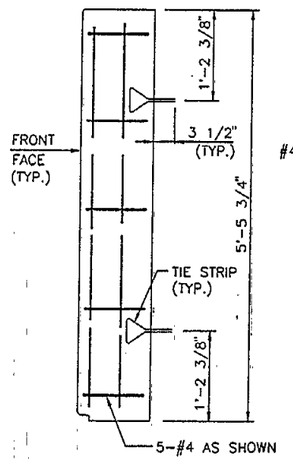

CE2K-2-R4

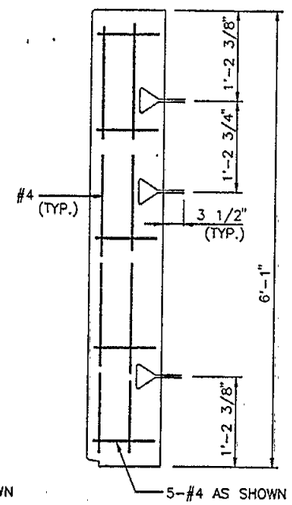

CE2L-3-R4

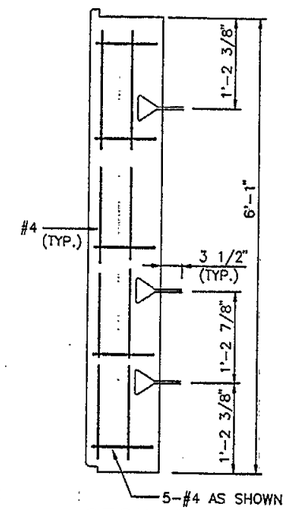

CE2P-3-R4

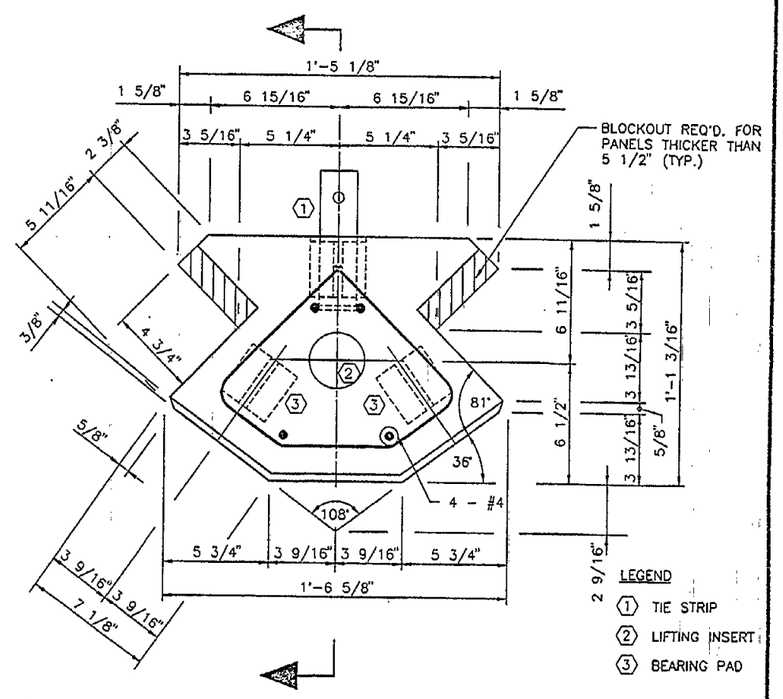

CORNER ELEMENT TYPE 2 90°± - 118°±

SCALE: 3" = 1'- 0"

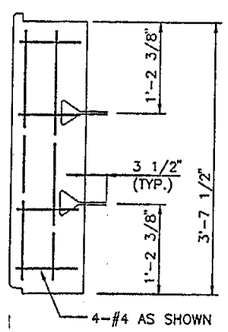

CE2Q-2-R4

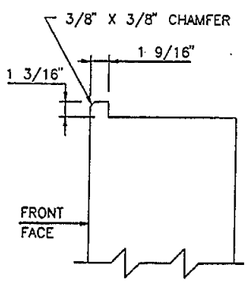

DETAIL "A"

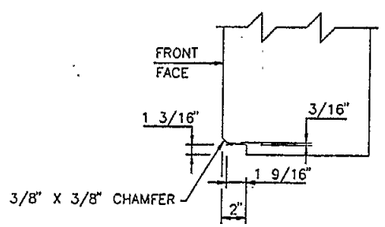

DETAIL "B"

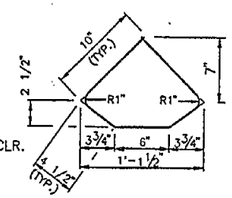

NOTE: 1 1/2" MIN.CLR.
ON ALL REBAR.

BAR DETAIL

SCALE: 1 1/2" = 1'-0"

(DIMENSIONS SHOWN ARE OUT TO OUT)

KEY TO PIECE MARK

CE2A-2-R4

- PANEL REINFORCEMENT
- NO. OF TIE STRIPS
- PANEL HEIGHT
- TYPE
- CORNER ELEMENT

PADOT DRAWING #94-603-BQAD

This drawing contains information proprietary to The Reinforced Earth Company, and is being furnished for the use of PENN. DOT only. The Reinforced Earth Company is exclusive licensee in the United States under patents issued to Henri Vidal, and the furnishing of this drawing does not constitute an expressed or implied license under the Vidal patents.

COMMONWEALTH OF PENNSYLVANIA REGISTERED PROFESSIONAL ENGINEER DAVID PAUL HEINRICH No. 19999-E

The Reinforced Earth Company
reinforced earth®
8614 Westwood Center Drive
Suite 1100
Vienna, Virginia 22182
(703) 821-1175

"REINFORCED EARTH" is the registered trademark of The Reinforced Earth Company.

DESIGNED BY:	PSS
PROJECT ENGR:	KT
CHECKED BY:	
ENG. MANAGER	

REV.	DATE	DESCRIPTION

PROJECT NAME	STANDARD PRECAST PANEL SHOP DRAWINGS	DATE 2/16/93
LOCATION		CONTRACT NO.
OWNER	PENN. DOT	DRAWING NO. S14
DRAWING COVERS	CORNER ELEMENT TYPE "CE2"	SCALE AS SHOWN

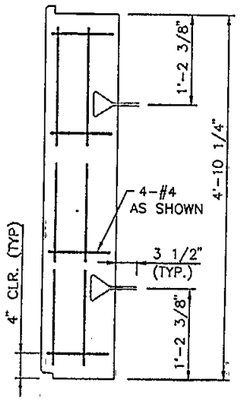

CE3A-2-R4

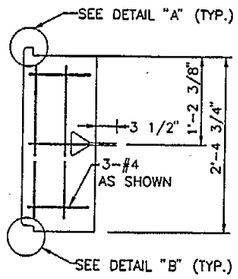

CE3B-1-R4

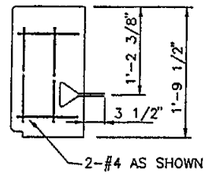

CE3C-1-R4

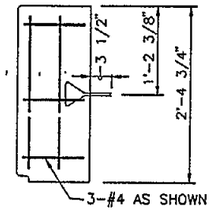

CE3D-1-R4

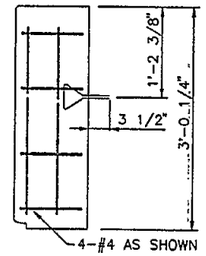

CE3E-2-R4

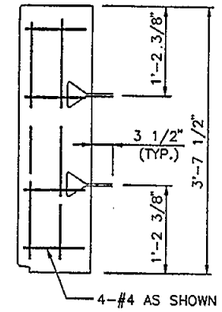

CE3F-2-R4

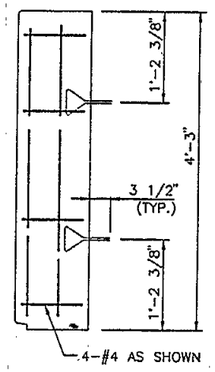

CE3G-2-R4

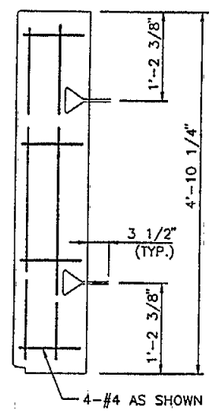

CE3H-2-R4

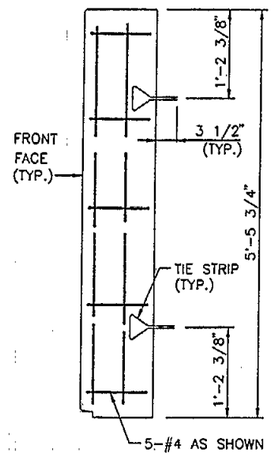

CE3K-2-R4

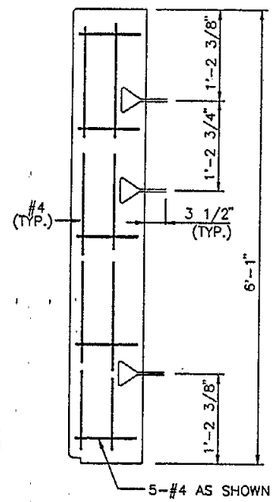

CE3L-3-R4

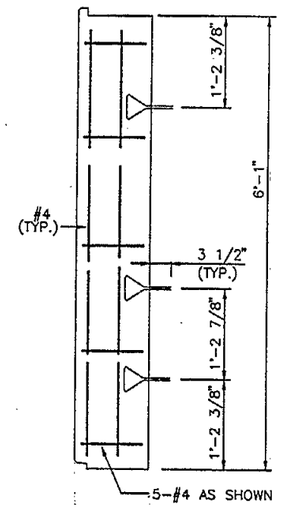

CE3P-3-R4

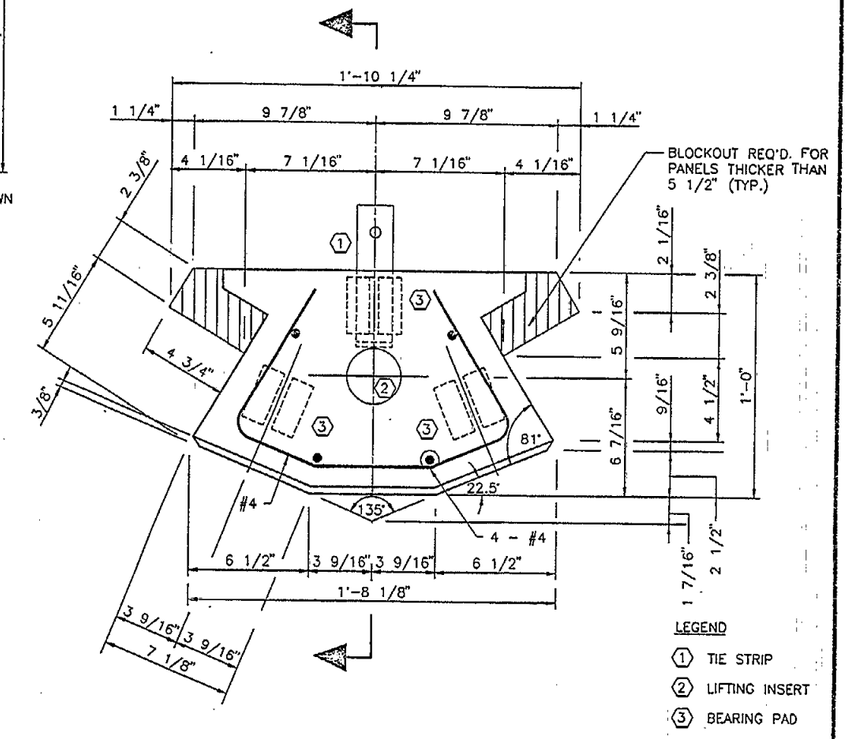

CORNER ELEMENT TYPE 3 118°± - 162°±

SCALE: 3" = 1'- 0"

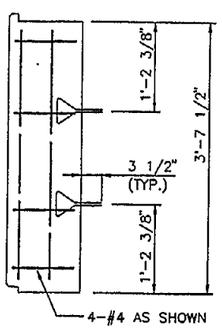

CE3Q-2-R4

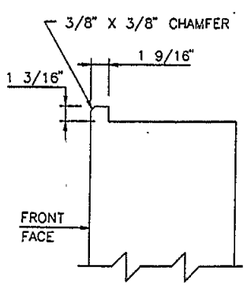

DETAIL "A"

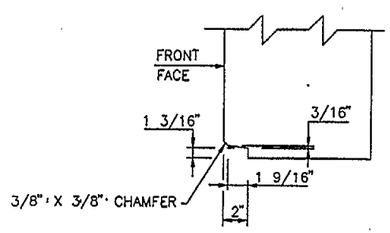

DETAIL "B"

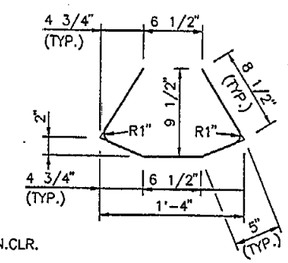

NOTE: 1 1/2" MIN.CLR.
ON ALL REBAR.

BAR DETAIL

SCALE: 1 1/2" = 1'-0"

(DIMENSIONS SHOWN ARE OUT TO OUT)

KEY TO PIECE MARK

CE3A-2-R4

- PANEL REINFORCEMENT
- NO. OF TIE STRIPS
- PANEL HEIGHT
- TYPE
- CORNER ELEMENT

PADOT DRAWING #94-603-BQAD

This drawing contains information proprietary to The Reinforced Earth Company, and is being furnished for the use of PENN. DOT only.
The Reinforced Earth Company is exclusive licensee in the United States under patents issued to Henri Vidal, and the furnishing of this drawing does not constitute an expressed or implied license under the Vidal patents.

The Reinforced Earth Company
8614 Westwood Center Drive
Suite 1100
Vienna, Virginia 22182
(703) 821-1175

"REINFORCED EARTH" is the registered trademark of The Reinforced Earth Company.

DESIGNED BY: PSS				PROJECT NAME	STANDARD PRECAST PANEL SHOP DRAWINGS
PROJECT ENGR: KT				LOCATION	
CHECKED BY:				OWNER	PENN. DOT
ENG. MANAGER	REV.	DATE	DESCRIPTION	DRAWING COVERS	CORNER ELEMENT TYPE "CE3"

DATE	2/16/93
CONTRACT NO.	
DRAWING NO.	S15
SCALE	AS SHOWN

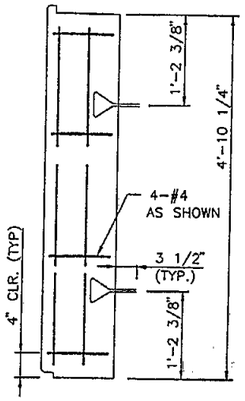

CE4A-2-R4

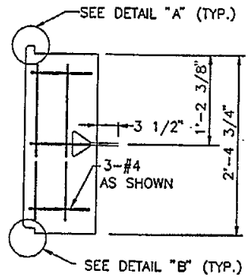

CE4B-1-R4

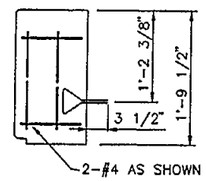

CE4C-1-R4

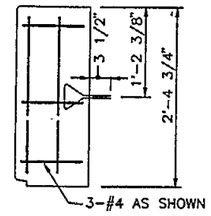

CE4D-1-R4

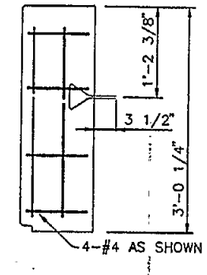

CE1E-2-R4

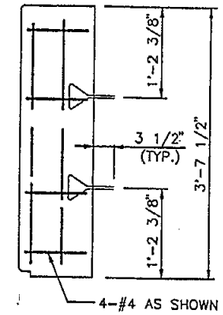

CE1F-2-R4

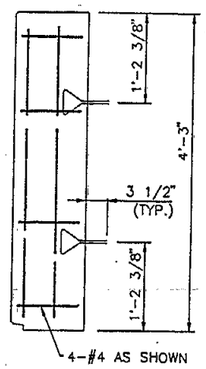

CE4G-2-R4

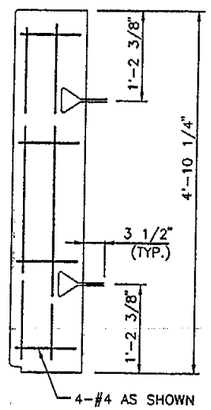

CE4H-2-R4

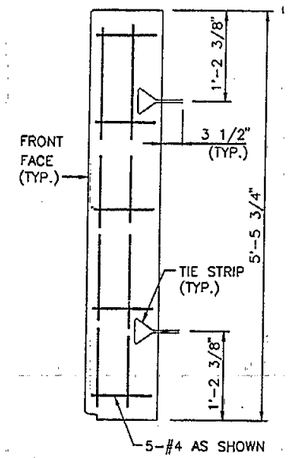

CE4K-2-R4

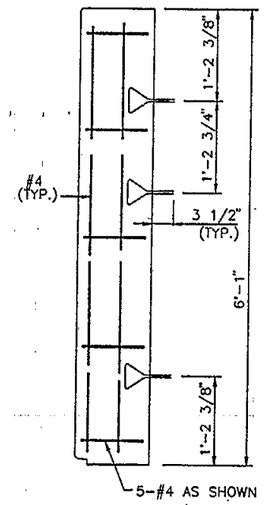

CE4L-3-R4

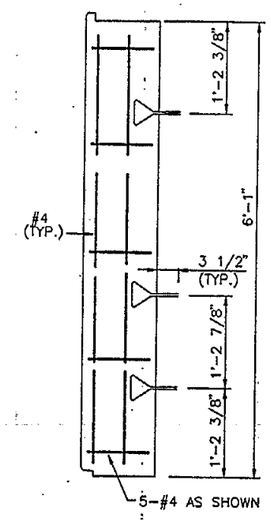

CE4P-3-R4

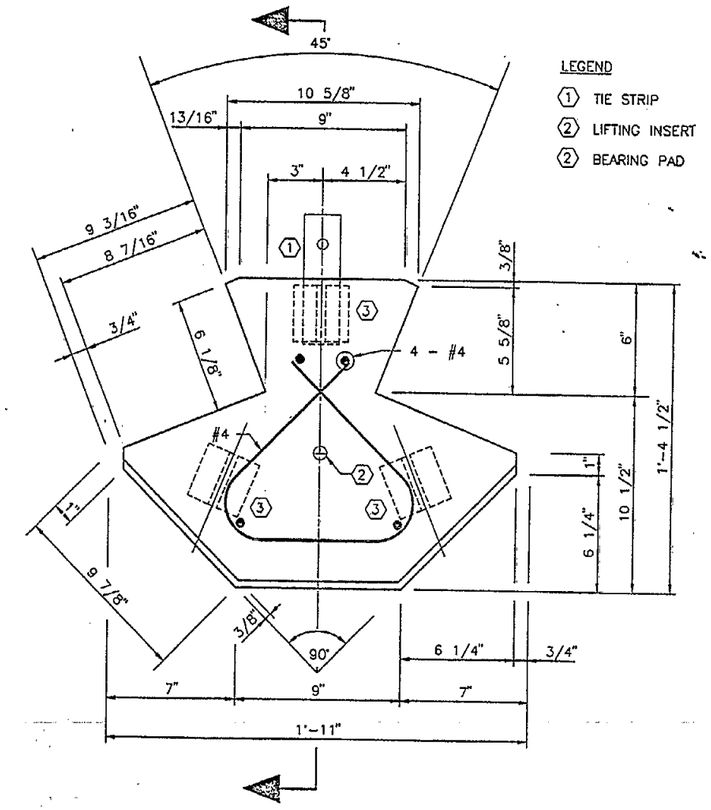

CORNER ELEMENT TYP 4 30°± – 63°±

SCALE: 3" = 1'- 0"

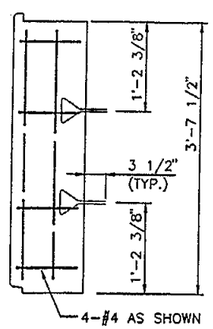

CE4Q-2-R4

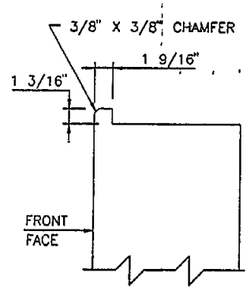

DETAIL "A"

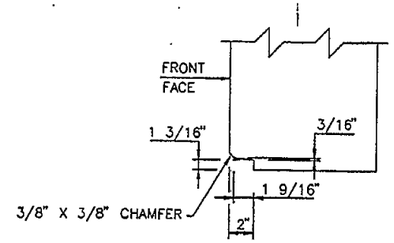

DETAIL "B"

NOTE: 1 1/2" MIN.CLR. ON ALL REBAR.

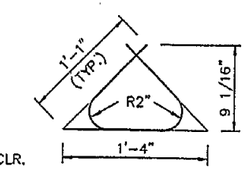

BAR DETAIL

SCALE: 1 1/2" = 1'-0"

(DIMENSIONS SHOWN ARE OUT TO OUT)

KEY TO PIECE MARK

CE4A-2-R4

- PANEL REINFORCEMENT
- NO. OF TIE STRIPS
- PANEL HEIGHT
- TYPE
- CORNER ELEMENT

PADOT DRAWING #94-603-BQAD

This drawing contains information proprietary to The Reinforced Earth Company, and is being furnished for the use of PENN. DOT only.
The Reinforced Earth Company is exclusive licensee in the United States under patents issued to Henri Vidal, and the furnishing of this drawing does not constitute an expressed or implied license under the Vidal patents.

COMMONWEALTH OF PENNSYLVANIA REGISTERED PROFESSIONAL DAVID PAUL KITTELSON No. 15795-E

The Reinforced Earth Company
reinforced earth
8614 Westwood Center Drive
Suite 1100
Vienna, Virginia 22182
(703) 821-1175

"REINFORCED EARTH" is the registered trademark of The Reinforced Earth Company.

DESIGNED BY:	PSS
PROJECT ENGR:	KT
CHECKED BY:	
ENG. MANAGER	

REV.	DATE	DESCRIPTION

PROJECT NAME	STANDARD PRECAST PANEL SHOP DRAWINGS	DATE 2/16/93
LOCATION		CONTRACT NO.
OWNER	PENN. DOT	DRAWING NO. S16
DRAWING COVERS	CORNER ELEMENT TYPE "CE4"	SCALE AS SHOWN

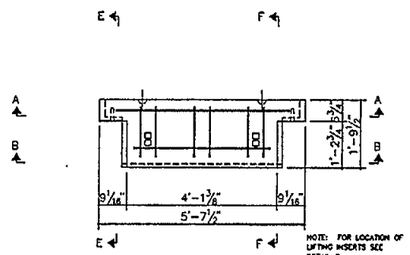

C-2-R6

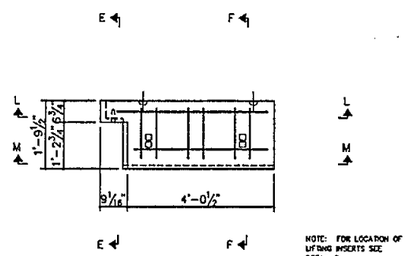

CL-2-R6-4.45

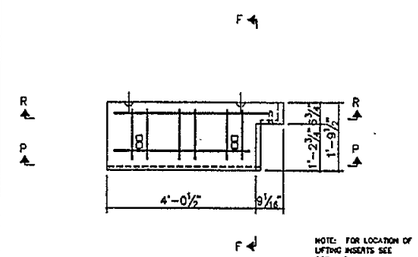

CR-2-R6-4.45

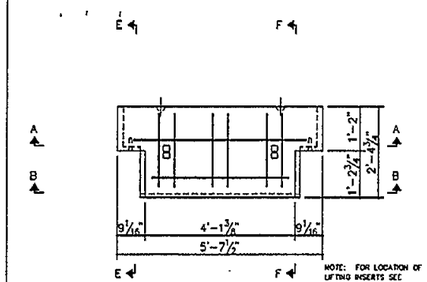

D-2-R6

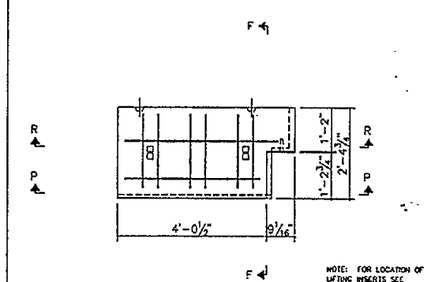

DR-2-R6-4.45

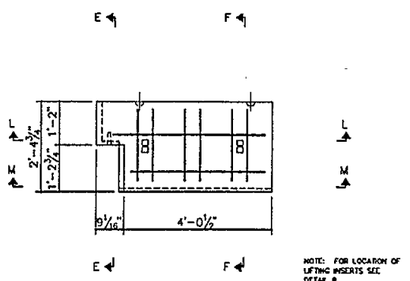

DL-2-R6-4.45

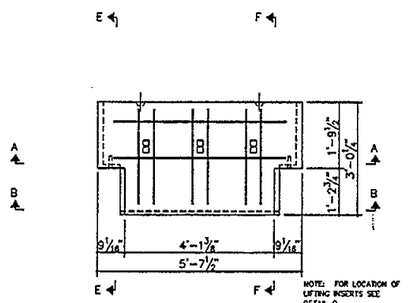

E-3-R6

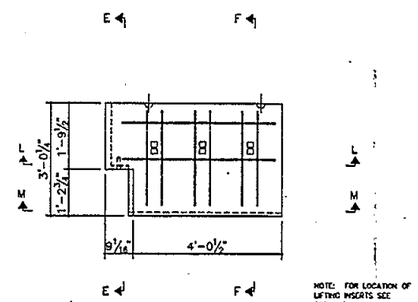

EL-3-R6-4.45

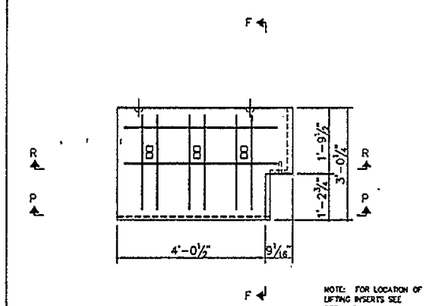

ER-3-R6-4.45

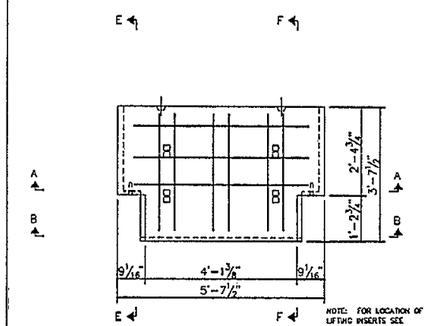

F-4-R6

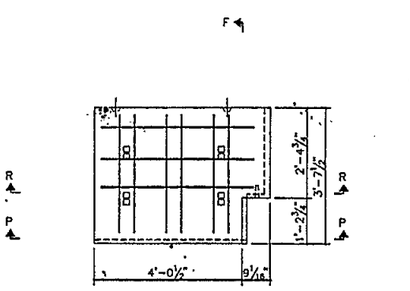

FR-4-R6-4.45

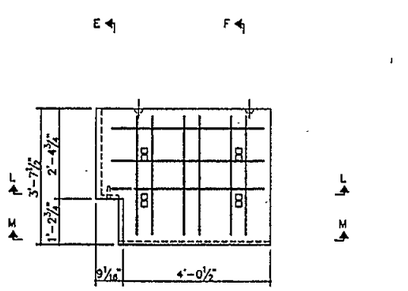

FL-4-R6-4.45

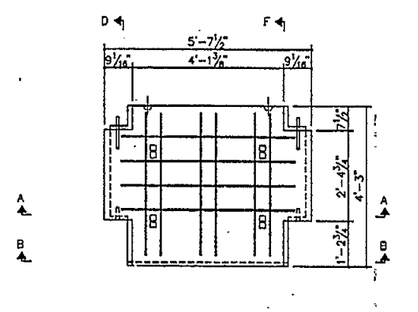

G-4-R6

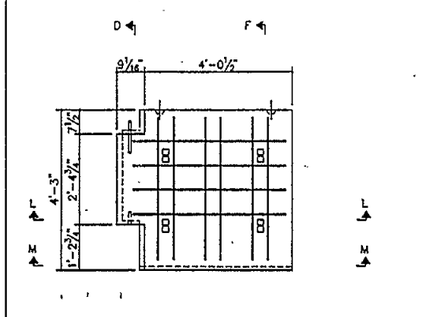

GL-4-R6-4.45

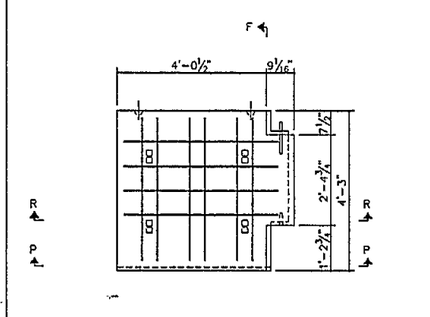

GR-4-R6-4.45

PADOT DRAWING # 94-603-BQAD

drowing contains information proprietary to The Reinforced Earth Company, and is being furnished for the use of PENN. DOT only.
The Reinforced Earth Company is exclusive licensee in the United States under patents issued to Henri Vidal, and the furnishing of this drowing does not constitute an expressed or implied license under the Vidal patents.

COMMONWEALTH OF PENNSYLVANIA REGISTERED PROFESSIONAL DAVID PAUL McKITTRICK No. 19294-E

The Reinforced Earth Company
reinforced earth
8614 Westwood Center Drive
Suite 1100
Vienna, Virginia 22182
(703) 821-1175

"REINFORCED EARTH" is the registered trademark of The Reinforced Earth Company.

DESIGNED BY:	
PROJECT ENGR:	
CHECKED BY:	
ENG. MANAGER	

REV.	DATE	DESCRIPTION
1	10/17/94	NEW SHEET ADDED

PROJECT NAME	STANDARD PRECAST PANEL SHOP DRAWINGS	DATE 10/17/94
LOCATION		CONTRACT NO.
OWNER	PENN. DOT	DRAWING NO. S17
DRAWING COVERS	PRECAST PANEL SHOP DRAWINGS	SCALE 1/2"=1'-0"

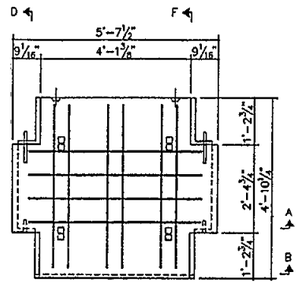

NOTE: FOR LOCATION OF LIFTING INSERTS SEE DETAIL N

H-4-R6

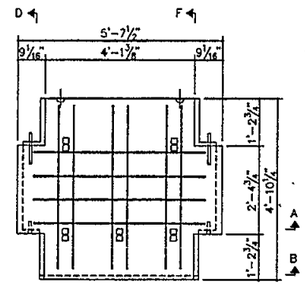

NOTE: FOR LOCATION OF LIFTING INSERTS SEE DETAIL N

H-5-R6

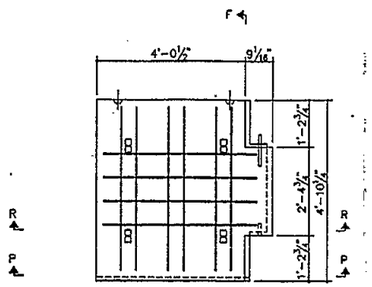

NOTE: FOR LOCATION OF LIFTING INSERTS SEE DETAIL P

HR-4-R6-4.45

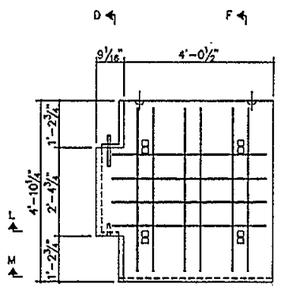

NOTE: FOR LOCATION OF LIFTING INSERTS SEE DETAIL P

HL-4-R6-4.45

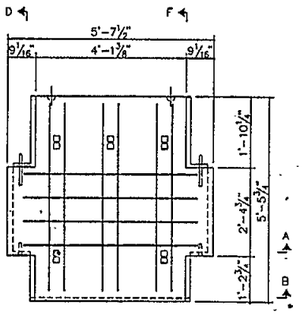

NOTE: FOR LOCATION OF LIFTING INSERTS SEE DETAIL N

K-5-R6

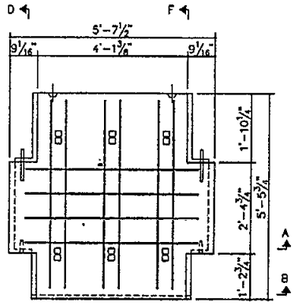

NOTE: FOR LOCATION OF LIFTING INSERTS SEE DETAIL N

K-6-R6

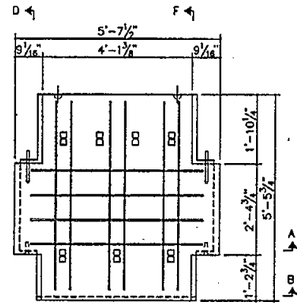

NOTE: FOR LOCATION OF LIFTING INSERTS SEE DETAIL N

K-7-R6

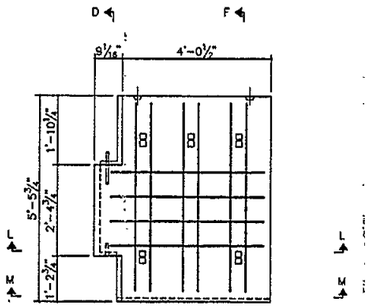

NOTE: FOR LOCATION OF LIFTING INSERTS SEE DETAIL P

KL-5-R6-4.45

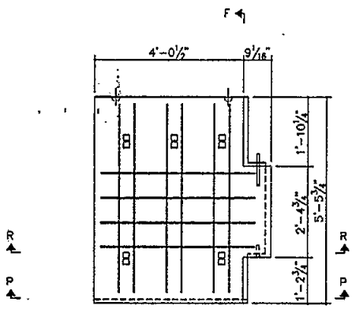

NOTE: FOR LOCATION OF LIFTING INSERTS SEE DETAIL P

KR-5-R6-4.45

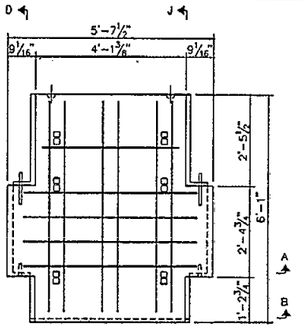

NOTE: FOR LOCATION OF LIFTING INSERTS SEE DETAIL N

L-6-R6

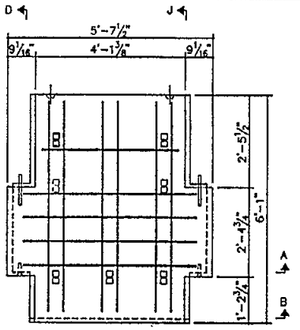

NOTE: FOR LOCATION OF LIFTING INSERTS SEE DETAIL N

L-7-R6

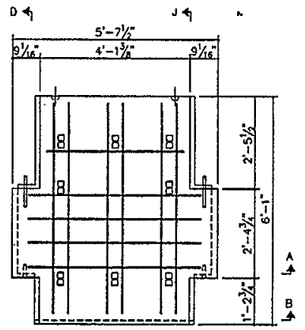

NOTE: FOR LOCATION OF LIFTING INSERTS SEE DETAIL N

L-8-R6

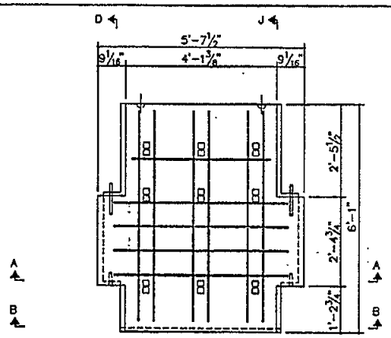

NOTE: FOR LOCATION OF LIFTING INSERTS SEE DETAIL N

L-9-R6

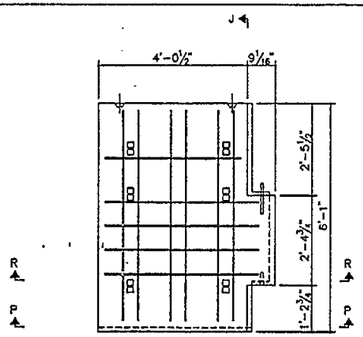

NOTE: FOR LOCATION OF LIFTING INSERTS SEE DETAIL P

LR-6-R6-4.45

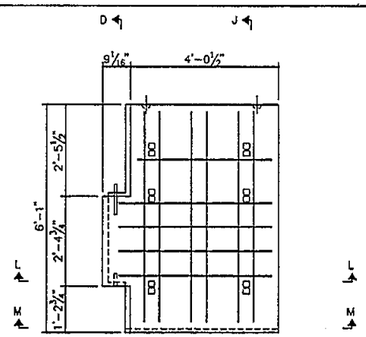

NOTE: FOR LOCATION OF LIFTING INSERTS SEE DETAIL P

LL-6-R6-4.45

PADOT DRAWING #94-603-BQAD

Drawing contains information proprietary to The Reinforced Earth Company, and is being furnished for the use of PENN. DOT only.
The Reinforced Earth Company is exclusive licensee in the United States under patents issued to Henri Vidal, and the furnishing of this drawing does not constitute an expressed or implied license under the Vidal patents.

COMMONWEALTH OF PENNSYLVANIA
REGISTERED PROFESSIONAL
DAVID PAUL McKITTRICK
No. 24040-E
Date 10/17/94

The Reinforced Earth Company
reinforced earth
8614 Westwood Center Drive
Suite 1100
Vienna, Virginia 22182
(703) 821-1175

"REINFORCED EARTH" is the registered trademark of The Reinforced Earth Company.

DESIGNED BY:	TSS
PROJECT ENGR:	
CHECKED BY:	DP
ENG. MANAGER	DP

REV.	DATE	DESCRIPTION
1	10/17/94	NEW SHEET ADDED

PROJECT NAME	STANDARD PRECAST PANEL SHOP DRAWINGS	DATE 10/17/94
LOCATION		CONTRACT NO.
OWNER	PENN. DOT	DRAWING NO. S18
DRAWING COVERS	PRECAST PANEL SHOP DRAWINGS	SCALE 1/2"=1'-0"

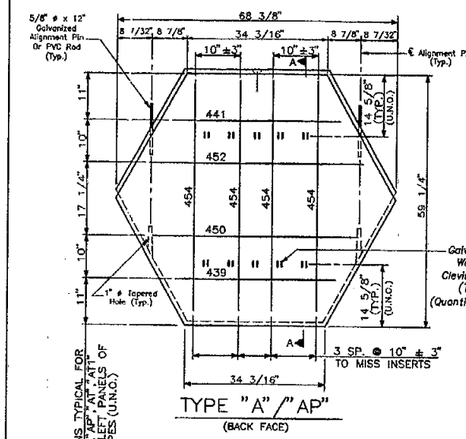

TYPE "A"/"AP"
(BACK FACE)

DIMENSIONS TYPICAL FOR TYPES "A", "AP", "AT", "AT1" RIGHT & LEFT PANELS OF THESE TYPES (U.N.O.)

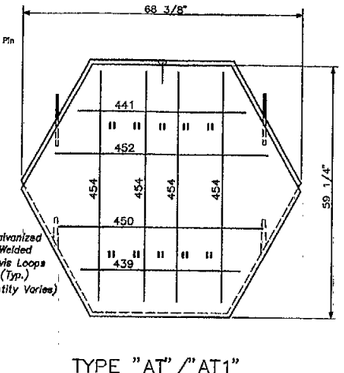

TYPE "AT"/"AT1"
(BACK FACE)

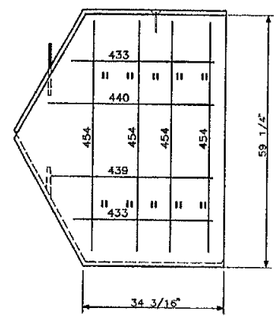

TYPE "AL"
(BACK FACE)

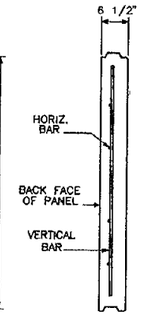

SECTION A–A

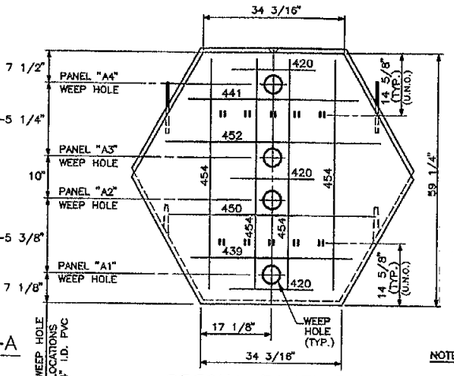

SPECIAL PANEL TYPES:
A1,A2,A3 & A4
(BACK FACE)
NOTE: USE ONE 420 BAR TO REINFORCE WEEP HOLE.

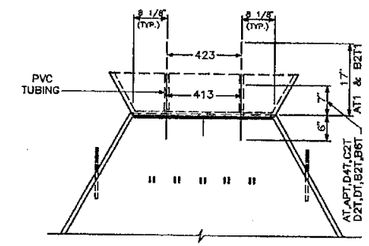

TYPES:AT,AT1,APT,D4T,C2T,D2T,DT,B2T,B2T1 & B6T
(SIMILAR FOR RIGHT AND LEFT END PANELS OF THESE TYPES.)
NOTE:AT,APT,D4T,C2T,D2T,DT,B2T & B6T PANELS HAVE 2–413 BARS.
AT1 & B2T1 PANELS HAVE 2–423 BARS.

NOTES:
1. ALL REINFORCING STEEL TO BE #4 BARS.
2. ALL REINFORCING STEEL TO BE GRADE 60, EPOXY COATED.
3. DIMENSIONS SHOWN ARE TO THE FRONT FACE UNLESS NOTED OTHERWISE.
4. HORIZONTAL BARS TO HAVE 2"(MIN.),2 1/2"(MAX.) CLEAR TO THE BACK FACE.
5. VERTICAL BARS TO HAVE 2 1/2"(MIN.),3"(MAX.) CLEAR TO THE BACK FACE.
6. ALL BARS TO HAVE 2" MIN. CLEAR TO SIDES.
7. RIGHT END PANELS ARE OPPOSITE OF LEFT END PANELS.
8. PANEL DESIGNATIONS FOLLOWED BY A "1" INDICATES THAT TWO #413 OR #423 BARS ARE REQUIRED. SEE DETAIL UPPER RIGHT THIS SHEET.
9. REINFORCEMENT LABELS INDICATE BAR SIZE AND LENGTH. EXAMPLE: 454 IS A #4 BAR 54" LONG.
10. PANEL TYPES; "A","B2","B6" (INCLUDING LEFT AND RIGHT END PANELS) REQUIRE ALIGNMENT PINS.
11. LIFTING INSERT AS SUGGESTED BY MANUFACTURER.
12. REFER TO BC-799 FOR PRECAST COPING REBAR DETAILS.
13. CONCRETE MINIMUM COMPRESSIVE STRENGTH AS SPECIFIED IN THE CONTRACT SPECIAL PROVISIONS.

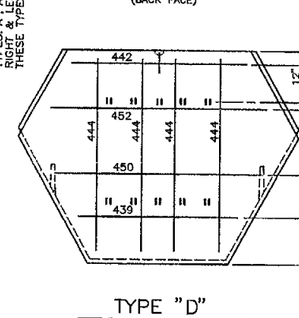

TYPE "D"
(BACK FACE)

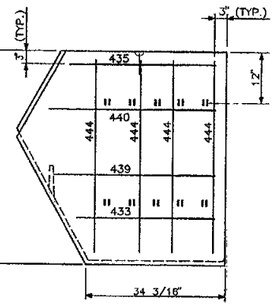

TYPE "DL"
(BACK FACE)

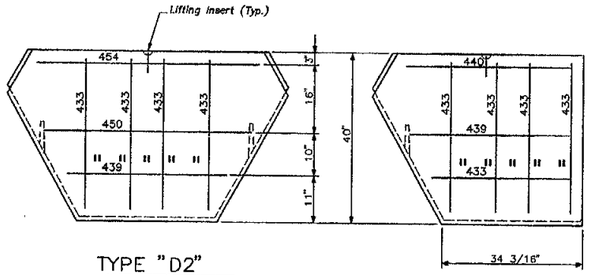

TYPE "D2"
(BACK FACE)

TYPE "D2L"
(BACK FACE)

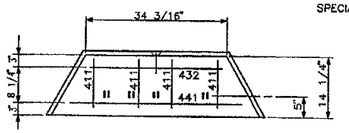

TYPE "B4"
(BACK FACE)

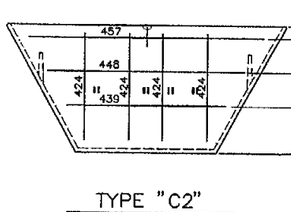

TYPE "C2"
(BACK FACE)

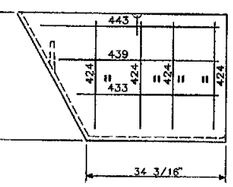

TYPE "C2L"
(BACK FACE)

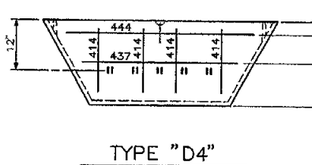

TYPE "D4"
(BACK FACE)

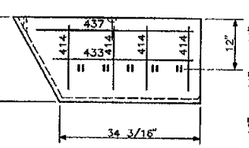

TYPE "D4L"
(BACK FACE)

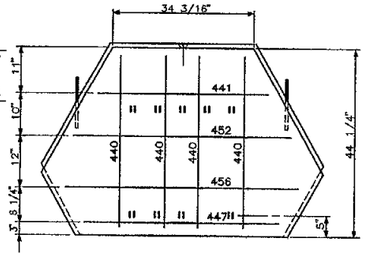

TYPE "B6"
(BACK FACE)

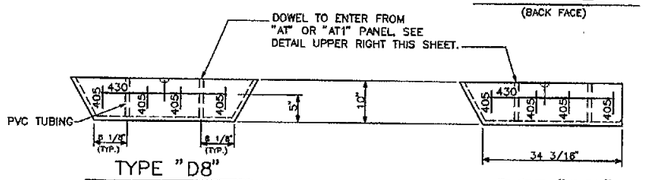

TYPE "D8"
(BACK FACE)

TYPE "D8L"
(BACK FACE)

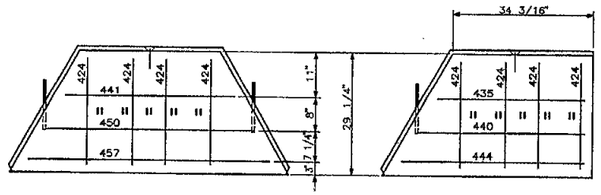

TYPE "B2"
(BACK FACE)

TYPE "B2L"
(BACK FACE)

PANEL REINFORCEMENT (BACK FACE)
SCALE:3/4"=1'-0"

U.S. PATENT NUMBER 4,725,170

NOTE: "I HEREBY CERTIFY THAT ALL DESIGN ASSUMPTIONS HAVE BEEN VALIDATED EITHER THROUGH CONSTRUCTION DETAILS OR NOTES ON THESE DRAWINGS OR THROUGH THE CONTRACT PLANS AND PROVISIONS."

COMMONWEALTH OF PENNSYLVANIA
DEPARTMENT OF TRANSPORTATION
DRAWING ACCEPTANCE
RECOMMENDED BY: 12/8/94 DIRECTOR, BUREAU OF DESIGN DATE

PADOT DRAWING -#94-602-BQAD

Commonwealth of Pennsylvania
DEPARTMENT OF TRANSPORTATION
BUREAU OF HIGHWAY DESIGN

PREFABRICATED RETAINING WALLS DETAILS
M.S.E. WALL: VSL RETAINED EARTH WALL

HEXAGON PANEL
SHOP DRAWING

SHEET 1 OF 1

Product:

INVERSET Precast Concrete/Steel Superstructure
Special Provisions and Standard Detail Drawings
Item 9050 ___ Precast/Concrete/Steel Superstructure

Approval Date:

November 19, 1996

Initiated By SOL:

431-96-49

Application/Use:

INVERSET - Precast concrete/steel Superstructure System manufactured by The Fort Miller Co., Inc., P.O. Box 98, Schuylerville, New York 12781 (Tel. No. 518-695-5000), to be used as an alternate or "as-designed" precast concrete/steel superstructure.
District Engineers/Administrator may authorize the use of this system as an alternate or "as-designed" on a project by project basis.

Specifications:

Attached is a copy of Standard Special Provisions along with Standard Detail Drawings (PADOT 90-117 PE) dated September 27, 1996.

Standard Drawings:

Attached is a copy of Standard Detail Drawings (PADOT 90-117 PE) showing typical details dated September 27, 1996.

Comment:

For projects for which the District Engineer/Administrator elects to permit the use of this system as an alternate, a special provision should be included in the proposal to indicate that the subject item alternate is allowed. The special provision must show that the contractor will be required to design the system and revise the pertinent drawings as per DM-4 PP 1.10 to show the usage of INVERSET Precast Concrete/Steel Superstructure as an alternate and be required to reimburse the Department a fee of **$1000.00** per design to review and approve the revision. The FHWA approval has been secured for INVERSET - Precast Concrete/Steel Superstructure.

The Department’s Specifications Section 107.03 of Publication 408 is applicable (on all projects) for use of INVERSET - Precast Concrete/Steel Superstructure Systems.

I. DESCRIPTION - This work is the construction of a precast concrete/steel superstructure.

II. MATERIAL - Prior to fabrication, submit shop drawings for review and acceptance.

(a) Precast Concrete/Steel Superstructure. INVERSET (TM), Fabricated by the Fort Miller Co. of Schuylerville, NY 12871 Phone (518)695-5000. Drawing No. 90-117 PE (dated 09/27/96), including design, material, and fabrication requirements is available upon request from District Contract Management Office &ml Phone .

(b) Other Material Section 1001.2(a),(b),(d),(e),(h), and (i).

III. CONSTRUCTION

(a) Design.

Design in accordance with guidelines shown on drawing 90-117 PE.

(b) Shop Drawings. Provide approved shop drawings before fabricating the INVERSET bridge. Provide shop drawings meeting the requirements of Section 105.02(d). Show the items listed above on the shop drawings. Also include items such as chairs, inserts, mechanical couplers and lifting devices and list source, type and supplier for these.

(c) Inspection. Precast segments will be inspected by Department representatives during the complete fabrication process.

(d) Quality Control.

1. General. Each fabricating plant establishes a level of quality control based on uniform practices in all stages of production.

2. Quality Control Personnel. The fabricator provides personnel assigned to, and responsible for, quality control.

3. Quality Control Procedure. Do not start fabrication without an approved quality control procedure.

(e) Handling and Storage. Handle and store precast segments such that damage will not occur.

(f) Delivery. Replace Precast segment damaged by improper storing, handling, transporting or erection at no expense to the Department.

Segments will be inspected again by the Engineer at the site for possible damage and cracking during shipment and for tolerances and other dimensions required for the satisfactory assembly.

Do not ship segments until the 28 day minimum compressive strength is attained.

ıovide 24 hour advance notice of loading and shipping schedule. Have the ·epartment representative verify Form CS-4171 and properly tag segments prior o shipping. Do not ship unapproved items.

g) Installation Requirements. Submit a detailed erection procedure indicating ıe ɔd of erection and equipment required to the Engineer 15 working days in ce of starting work.

.. Layout. Layout anchor bolts in accordance with updated shop drawings ;upplied by the fabricator.

:. Bearing and Bearing Surfaces. Satisfactorily repair any damage done to the existing structure beyond the indicated removal limits.

;traighten existing reinforcement that is to remain in place, within the limits ɔf removal. If required, cut and bend the existing reinforcing. Wire brush, :lean, and paint the existing reinforcement with a coating of neat-cement (semi-liquid mixture of cement and water).

:onstruct bearing surfaces and install bearings along with shims when required ıs indicated. Repair paint damaged by welding of shims.

3. Placement. Prior to placing segments, examine joint surfaces for cleaniness ınd clean, if necessary.

?lace segments carefully so as not to disturb the bearings or damage the segment or backwall.

:onstruct cast-in-place backwall as indicated and install diaphragms. Prior to :illing joints inspect deck surface for alignment and surface tolerances as follows:

o " vertically along longitudinal edges of adjacent segments.

o 1/4" vertically at ends of segments for a multiple span bridge.

o 3/8" in twelve feet tranverse surface elevation. Provide a positive cross slope such that deck surface drains.

4. Joints and Lift Holes. Seal bottom of lift hole with a removable form and fill flush to deck surface with non-shrink grout.

Seal bottom of longitudinal joint with joint backing material and place non-shrink mortar to the elevation indicated. Place elastomeric concrete as specified after non-shrink mortar has cured. Provide a removable form to seal bottom of joint if joint backing material leaks.

Fasten plate for transverse joint. Shim as required.

5. Deck Surface Texture. Provide a textured finish for the full deck width in the plant or in the field as follows:

o rectangular shaped groove

o center to center spacing, 3/8" min. - 3/4" max.

o ·dth, 3/32" min. - 3/16" max.

depth, 1/8" min. - 3/16" max.

Do not texture deck surface until joints have been filled and cured. Do not texture within six inches of a tranverse joint.

R[illegible]ve and replace segments(s) damaged by texturing or having reinforcement e[illegible]sed at no expense to the Department.

6. Parapet. Do construct cast-in-place parapet until joints have cured and deck surface has been textured.

Prepare surface and construct parapet as shown on approved shop drawing, in accordance with Section 1001.3.

IV. MEASUREMENT AND PAYMENT -

Precast Concrete/Steel Superstructure Lump Sum

Includes constructing substructure as indicated, furnishing and placing INVERSET superstructure, and constructing parapet.

DESIGN SPECIFICATION FOR INVERSET™ BRIDGE UNITS

1.0 GENERAL:

A. A Design Engineer registered in the Commonwealth of Pennsylvania shall prepare job specific contract documents, including the type, size and location drawings. A consultant shall supply the Inverset Design Engineer all information necessary to complete the superstructure design. The Inverset Design Engineer shall be responsible for preparing the design calculations and contract drawings that detail the Inverset bridge superstructure. The Inverset Design Engineer takes full responsibility for the engineering theory, calculation correctness and ensuring all design assumptions are validated in the contract documents either by needed details or construction specifications.

The manufacturer of the Inverset units will provide all pertinent fabrication details, technical assistance and support as required for the Design Engineer to prepare the design. The manufacturer of the Inverset takes full responsibility for fabricating all units in accordance with the design, contract drawings and specifications of the consultant.

Inverset bridge units will be limited to spans not exceeding 90'-0" in length and a skew angle (the Department definition) of 30 degrees.

Secure Chief Bridge Engineer's approval in writing before incorporating Inverset bridge units in any project.

2.0 DESIGN:

A. A professional engineer registered in the Commonwealth of Pennsylvania shall design and/or supervise the design of the bridge. The first sheet of computations shall show the professional engineer's seal, signature, and the date signed.

B. Clearly indicate on the calculations and shop drawings the design method (load factor).

C. Base the design of the concrete deck on the load factor method.

D. Note that 3D analysis will be required when the skew (the Department definition) is less than 70°.

E. In the event that certain design parameters, stresses, or specifications are in conflict, the following order of predominance governs:
1. Design requirements listed in "Special Drawings and Special Design Requirements" (Part B) of the special provision
2. PDT - Design standards
3. PDT - Design Manual, Part 4 (structures)
4. AASHTO Standard Specifications for Highway Bridges (current edition)

F. In the event that a clear order of predominance cannot be established or a difference in the interpretation of the design cannot be resolved, the Chief Bridge Engineer is to be arbiter and his decision is to be final.

G. The design and rate for vehicles shall be HS-25, ML-80, modified (125%) Alternate Military Loading, and P-82. Comply with the design criteria in "Design Manual Part 4 - Structures", the AASHTO Standard Specifications for highway bridges, and as specified, subject to exceptions and/or additions under "Special Drawings and Special Design Requirements" Part B.

H. Cast-in-place concrete parapet, barriers only are accepted. The parapet is to meet the Department standard shape, size and reinforcement. All reinforcement bars are to be epoxy coated.

I. Do not reduce the original horizontal and vertical clearances and/or waterway openings. Do not change the roadway grade or alignment.

J. Provide at no expense to the Department four sets (three sets to District and one set to Central Office Bridge Division) of construction drawings (22"x36"), calculations, erection methods, and detailed erection plans for approval. Prepare in accordance with Penn DOT Design Manual - Part 4. Show a professional engineer's seal licensed in Pennsylvania, with a valid signature in ink, the date signed, a business name and business address, on the first sheet of the design drawings. The District Bridge Engineer will sign the final design plans.

K. On the first sheet of the construction drawings, include the following statement: "I certify that all assumptions made in designing this Inverset system have been validated either through construction details or special notes and instructions to the fabricator, erector and contractor". Place this statement above the P.E. seal.

3.0 DESIGN DRAWINGS:

Provide design drawings which include the following information:

A. Plan layout, including length, width, skew angle (if any) and orientation; rating table along with section properties, contours, controlling clearances, hydraulic data, elevation view, etc. per DM-4.

B. Concrete surface finish(es)

C. Concrete compressive strength

D. Structural steel type and grade specifications

E. Deck cross-sections showing structural depths, reinforcement and shear connectors; and structural steel girders and diaphragms including detail connections

F. Reinforcement schedule

G. Table showing beam forces (DL, DL2, LL, LL+I)

H. All needed superstructure details per DM-4. Follow Penn DOT drafting standards

I. Substructure design and details per DM-4

4.0 The Inverset superstructure system must be designed to allow for redecking in the field using conventional methods, including 15 P.S.F. for S.I.P. forms, future wearing surface and dead loads from deck slabs and parapets.

CONSTRUCTION SPECIFICATION FOR INVERSET

PRECAST PRECOMPRESSED CONCRETE/STEEL COMPOSITE SUPERSTRUCTURE

A. DESCRIPTION

The work includes fabricating, furnishing and installing Inverset superstructure units at the locations indicated on the plans.

B. MATERIALS

Provide materials and workmanship in accordance with Publication 408, and supplements thereto, and/or special conditions as specified herein. Section 714 of Publication 408 applies to precast concrete products.

1. Concrete
Provide concrete for decks and/or end of deck backwalls in accordance with Section 704, with a minimum 28 day compressive strength of 5,000 psi. Invert the units after the 5000 psi design strength has been met. When high range water reducers are used, provide a mix with a maximum slump of 7 inches and an air content or 7% ± 2%. Do not use calcium chloride, or an admixture containing calcium chloride.

2. Reinforcing Bars, Epoxy Coated Bars, and Steel Welded Wire Fabric: Section 709 and Section 1001.3(b) Pub. 408
Provide epoxy coated bars in the deck, parapets and backwalls/end walls.

3. Fabricated Structural Steel: Section 1105 - Pub. 408
Provide and fabricate all structural steel in compliance with Section 1105, Fabricated Structural Steel, in an approved AISC steel fabrication shop.

4. Welded Stud Shear Connectors: Section 1105.02(e) - Pub. 408

5. High Strength Bolts: Section 1105.02(d) - Pub. 408

6. Painting Structural Steel: Section 1060 - Pub. 408

7. Joint Key Material
a. Cementitious Grout: Section 1080.2(c) - Pub. 408. Provide an approved cement based, non-metallic, non-shrink grout in the bottom portion of the joint as indicated.
b. Elastomeric Concrete (approved)
c. Joint backer rod in accordance with Section 705.9, Pub. 408.

C. DRAWINGS

1. Provide shop drawings to show all fabrication details including the following information:
- Plan layout, including length, width, skew angle (if any), orientation and rating table along with section properties;
- Concrete mix design including admixtures;
- Concrete surface finish(es);
- Concrete compressive strength;
- Structural steel type and grade specifications;
- Fabrication details and curing procedures;
- Lifting details;
- Deck cross-sections showing structural depths and reinforcement; and structural steel girders and diaphragms including detail connections;
- Reinforcement schedule;
- Table showing beam forces (DL, DL2, LL, LL+I and factored load stresses at practical points)

2. Submit four copies of the construction drawings to the Engineer for review and approval. Return one copy (approved) to the fabricator.

D. FABRICATION TESTING AND INSPECTION:

1. Fabricate the precast segments in an approved plant in accordance with approved shop drawings and approved quality control plan, and Pub. 408 Section 714. DO NOT COMMENCE, UNDER ANY CIRCUMSTANCES, FABRICATION OF UNITS PRIOR TO APPROVAL OF THE SHOP DRAWINGS WITHOUT THE WRITTEN PERMISSION OF THE ENGINEER.

2. Concrete Forms
Provide forms that are well constructed, carefully aligned, clean, substantial and firm, securely placed and fastened together to provide a level, true riding surface. The adjustable supports and deflection control will be checked by the fabricator's engineer prior to pouring and monitored throughout the pouring process.

3. Bridge Deck Finish
Provide a coarse or No. 3 sandblast finish and field transverse saw grooving on top of textured deck as per section 501.3(j)4.

4. Concrete Mix Design and Proportion
Mix and deliver the concrete as specified in Section 704 - Pub. 408. Do not place concrete when ambient temperatures are below 40 degrees F or above 100 degrees F. Do not use admixtures containing chlorides.

5. Placing Concrete
Place all concrete in accordance with Section 1001.3 - Pub. 408. Notify the engineer in charge of the project of the concrete placement schedule at least 24 hours in advance. Do not place concrete until the reinforcing placement has been accepted.

6. Finishing
Finish to the top of the bridge in form with a magnesium float finish as shown on the individual shop drawings. The fascia area is to be smooth, free of surface air voids and finished with a smooth form finish.. Chamfers to be true and free from fins or other irregularities.

7. Curing
Indicate in the quality control plan and submit for approval the proposed method of cure in accordance with Section 1001.3 - Pub. 408. . Moisture must be retained within the concrete to insure the complete hydration of cement and to prevent the formation of cracks. The curing method must accomplish this as a minimum to qualify for acceptance. Maintain secondary curing, in a minimum 50°F environment, until the unit has reached a compressive strength of 3500 psi.

8. Removal from form - Section 1001.3(q)1 - Pub. 408
Do not remove the units from the form or lower forms from the concrete deck before the required stripping strength has been reached. If units are vertically lifted from the forms, lift them without lowering or adjusting the steel beam supports or deflection control equipment

9. Rejection of Units

Reject individual precast units for any of the following reasons:
a. Fractures or cracks passing through the deck or backwall/endwall
b. 28 day cylinder strength is less than design concrete strength
c. Camber which does not meet that required in the approved shop drawings
d. Honeycombed open texture
e. Dimensions not conforming within the allowable tolerances as specified
f. Separation of the concrete deck from the steel girders
g. Defects that indicate proportioning, mixing and molding not in compliance with the specification as specified or indicated.
h. Damaged ends where such damage would prevent making a satisfactory joint
i. Damage to the units during transportation, erection or construction.

Mark the rejected precast concrete segments "Rejected for Department (Penn DOT) Use" with waterproof paint.

10. Repair of Units
Repair and repair procedures require approval by the engineer and in accordance with the approved quality control plan.

11. Labeling
Each unit shall be clearly and permanently labeled on the underside of the deck (in the vicinity of the end diaphragm) with the following information.
1. "Inverset"
2. Manufacturer
3. Date of manufacture
4. Load Rating
5. Mark number

12. Shipping
Do not ship units until the minimum 28 day strength is attained and after the Department representative has stamped the units. Provide 24 hour advance notice of loading and shipping schedule.
a) Secure necessary hauling permits
b) Secure unit on vehicle so no fatigue cracking will occur during transportation of unit

13. Fabrication Tolerances (measured on the deck slab)
Fabricate precast units to comply with the following tolerances:
Width: ±1/4"
Overall depth of structural slab: ±1/4"
Reinforcing Cover: Top mat (bottom mat in mold) ±1/4"
Bottom mat (top mat in mold) ±1/4"
Inserts: ±1/2" between hole groups
±1/4"" for any hole or insert
Deviation from square - horizontal diagonals: ±1/2"
Deviation from precompressed design camber (inverted position): +1/4", -1/8"
Overall length of units: ±1/2" (End to end of deck)

14. Certify as specified in Section 106.03(b)3. Furnish a copy of the results of all tests performed that are necessary to assure compliance with the specifications.

E. CONSTRUCTION

1. GENERAL CONSTRUCTION
Fabricate Inverset units in accordance with the applicable sections of the Specifications, Publication 408, supplements thereto, and/or the special provisions for each respective item, and to the additional requirements contained herein. Submit construction procedures and permissible variations other than those contained herein, for approval.

Work will not proceed without approved construction and shop drawings.

2. ERECTION PROCEDURE.
Provide to the engineer in advance (15 working days) of any erection a detailed erection procedure which indicates the method of erection and the equipment to be used. The erection procedure shall be approved by the engineer in charge of the project prior to the start of any erection work.

3. LAYOUT
The fabricator shall supply to the contractor detailed as-built plans of the fabricated units. The contractor shall layout anchor bolts in accordance with the as-built drawings to facilitate proper fitting of the units during erection.

4. BEARING AND BEARING SURFACES.
Provide bearing surfaces properly finished to the correct elevation to provide full and even supporting surfaces for the bearings. Install bearings in accordance with the details shown on the plans.

5. INSTALLATION OF UNITS.
Install all units to the correct line and grade as shown on the approved drawings and as indicated in the approved erection procedure. After all the units are erected, inspect them to insure the correctness of their location. Use approved steel shims, welded between the bearing and the girder, to compensate for minor difference in elevation between units.

6. STRUCTURAL STEEL
Install all diaphragms and other structural steel work as shown on the approved shop drawings after the units are in their final locations.

7. MATCHING ELEVATION OF UNITS.
Adjacent units shall match in elevation within 3/8" vertically (along longitudinal edges). 1/4" vertically at the end of units on multiple span bridges, provided all diaphragms can be tightened without permanent deformation or damage to any structural component. If the tolerance is not met, adjust the units as indicated in the procedure shown on the approved shop drawings.

8. LONGITUDINAL JOINTS.
The surface of the joint shall be free of any material such as oil, grease or dirt which may prevent bonding of the sealing materials.

Prior to placement of the cementitious joint material, seal the bottom of the joint with an approved foam backer rod to prevent material loss. Place the cementitious material and cure in accordance with the manufacturer's instructions for use and install it to the dimensions shown on the approved shop drawings.

Additional sealing material, if required, shall be installed as shown on the approved shop drawings in accordance with the manufacturer's instructions.

9. SEALING OF LIFTING HOLES
After the units are in their final location, fill the lifting holes with cementitious grout in the same manner described in No. 8. Provide a removable form at the bottom surface of the deck to retain the grout.

10. TRANSVERSE JOINTS.
Seal transverse joints in accordance with the details shown on the approved shop drawings.

11. LOADING.
Units may be loaded upon erection and before the joints are sealed in accordance with the approved erection procedure. Once the joints are sealed, no further loading of the units will be allowed until joint material has properly and finally cured and as approved by the engineer. Cure the grout in accordance with the manufacturer's instructions until design strength has been met.

12. FINAL REPAIRS.
After all installation work is complete, repair remaining concrete defects and lifting holes as indicated and approved by the engineer.

13. TECHNICAL ASSISTANCE.
Have a representative from the fabricator present at the project site, full time, during the erection of Inverset units, to assist the contractor and engineer in the event unusual problems or special circumstances arise.

DEPARTMENT OF TRANSPORTATION
DRAWING ACCEPTANCE
RECOMMENDED BY: M. A. Patel 9/27/96
DIRECTOR, BUREAU OF DESIGN DATE

NOTE: INVERSET™ IS A PATENTED STRUCTURAL SYSTEM MANUFACTURED UNDER A LICENSE FROM ITS OWNER, THE KEITH AND GROSSMAN LEASING CO., NORMAN, OK.

STANDARD DRAWINGS

BD-601	CONCRETE DECK SLAB
BD-611	CONCRETE DIAPHRAGMS FOR STEEL I-BEAMS
BD-621	REINFORCED CONCRETE ABUTMENTS
BC-736	REBAR FABRICATION DETAIL
BC-751	BRIDGE DRAINAGE
BC-752	CONCRETE DECK SLAB DETAILS
BC-753	STEEL GIRDER DETAILS
BC-754	STEEL DIAPHRAGMS
BC-766	PREFORMED NEOPRENE COMPRESSION SEAL JOINT
BC-767	NEOPRENE STRIP SEAL DAM

NO	DATE	BY	REVISIONS

THE FORT MILLER Co., Inc.
P.O. BOX 98
SCHUYLERVILLE, NY 12871
(518) 695-5000
FAX: (518) 695-4970

DATE: 08/01/96
DRN. BY: BARBER
DWG. NO. SP1 C:\INVERSET\PDO.DWG
CHK. BY: MAZ, PJS
SHEET NO. 1 OF 4
SCALE: NONE

COMMONWEALTH OF PENNSYLVANIA
DEPARTMENT OF TR

Standard Module Schedule / Load Ratings Table

Span	Beam Size	Nominal Width* Unit	Nominal Width* Overall	No. of Units	Weight Per Unit	Reactions Per Beam	Load Ratings Table	HS 25.0	IML	P 82.0
29'-0"	W24x55	11'-10"	35'-6"	3	19.6 Tons	DL 13.5 k	IR	1.14	1.01	0.67
							OR	1.91	1.68	1.11
						Max LL 86.2 k	UC Moment	1196.3KFT		
							UC Shear	258.4 K		
34'-0"	W24x68	11'-10"	35'-6"	3	23.3 Tons	DL 16.1 k	IR	1.10	1.04	0.66
							OR	1.83	1.73	1.11
						Max LL 89.5 k	UC Moment	1465.8KFT		
							UC Shear	271.5 K		
39'-0"	W27x84	11'-10"	35'-6"	3	27.4 Tons	DL 18.7 k	IR	1.17	1.18	0.74
							OR	1.96	1.97	1.24
						Max LL 94.0 k	UC Moment	1918.2KFT		
							UC Shear	339.2K		
44'-0"	W27x94	11'-10"	35'-6"	3	31.3 Tons	DL 21.4 K	IR	1.05	1.12	0.66
							OR	1.75	1.87	1.15
						Max LL 100.9 K	UC Moment	2130.2 K-FT		
							UC Shear	361.4 K		
49'-0"	W30x108	11'-10"	35'-6"	3	35.5 Tons	DL 24.1 K	IR	1.09	1.21	0.74
							OR	1.81	2.02	1.23
						Max LL 109.3 k	UC Moment	2589.0KFT		
							UC Shear	447.4K		
54'-0"	W33x118	11'-10"	35'-6"	3	39.7 Tons	DL 26.9 k	IR	1.11	1.27	0.77
							OR	1.94	2.12	1.28
						Max LL 115.9 k	UC Moment	3010.2KFT		
							UC Shear	500.5K		
59'-0"	W33x130	11'-10"	35'-6"	3	44.1 Tons	DL 29.7 k	IR	1.07	1.26	.075
							OR	1.78	2.10	1.24
						Max LL 122.2 k	UC Moment	3300.1KFT		
							UC Shear	527.8K		
64'-0"	W36x135	11'-10"	35'-6"	3	48.1 Tons	DL 32.4 k	IR	1.01	1.22	0.69
							OR	1.68	2.04	1.14
						Max LL 127.6 k	UC Moment	3603.0KFT		
							UC Shear	591.1K		
69'-0"	W36150	11'-10"	35'-6"	3	53.0 Tons	DL 35.4 k	IR	1.02	1.26	0.67
							OR	1.70	2.10	1.12
						Max LL 132.1 k	UC Moment	3974.0KFT		
							UC Shear	615.7K		
74'-0"	W36x150	8'-10 1/2"	35'-6"	4	45.7 Tons	DL 30.0 k	IR	1.12	1.40	0.71
							OR	1.86	2.33	1.19
						Max LL 115.9 k	UC Moment	3789.5KFT		
							UC Shear	615.7K		
79'-0"	W36x150	8'-10 1/2"	35'-6"	4	49.6 Tons	DL 32.3 k	IR	1.07	1.36	0.67
							OR	1.78	2.26	1.12
						Max LL 118.3 k	UC Moment	4009.9KFT		
							UC Shear	640.3K		

Load Factor design used to calculate load ratings.
Wheel load distribution S/5.5 per beam
*Unit Width is c/c of joint, Skew = 90°

IR = Inventory Rating, OR = Operating Rating
UC Moment = Ultimate Capacity Moment
UC Shear = Ultimate Capacity Shear

DESIGN NOTES

A1) Design Specifications:
- a) Design Division I of AASHTO, Standard Specifications for Highway Bridges (15th edition, including interim specificotions), and as supplemented by Design Manual, Part 4 (including revisions).
- b) Design is in accordance with the strength design method (load factor design).
- c) Design is in accordance with the PennDOT "Design Specificotions for Inverset Bridge Units."

A2) Design Live Load:
- a) HS-25 loading, 125 percent of the Alternate Military Loading, with AASHTO Group 1 loading, P-82 (204k permit load) with AASHTO Group IB loading.
- b) reactions and load ratings include impact factor.

A3) Design Dead Loads:
- a) Includes 30 PSF for future wearing surface on the deck slab.
- b) Includes 505 PLF for concrete parapet
- c) Includes 7 PSF for top 1/2" concrete not included in structural depth of concrete slab.
- d) Includes 15 PSF for S.I.P. forms. (future redecking)

A4) The design tables shown on these drawings have been prepared to allow for redecking in the field using conventional methods, including 15 psf for S.I.P. forms, future wearing surface and dead loads from deck slab and parapets.

A5) The designs shown are for standard spans. For design of spans not shown on this sheet, use the design criteria and details shown herein.

END OF DECK/BACKWALL NOTES

C1) If integral backwall/concrete end diaphragm is required, follow PennDOT BD-611 and integral backwall/concrete end diaphragm details shown on sheet 2 of 3.

C2) Use same concrete as required for bridge deck for integral backwall/concrete end diaphragm (5,000 PSI).

C3) If integral backwall/concrete end diaphragm is required, seal joints (between units) with grout described in note B13 and as shown in joint detail on sheet 2 of 3.

C4) If integral backwall/concrete end diaphragm is not required, use steel end diaphragms shown on sheet 3 of 3, blockout area as shown in detail 1 on sheet 2 of 3, and PennDOT BD-621.

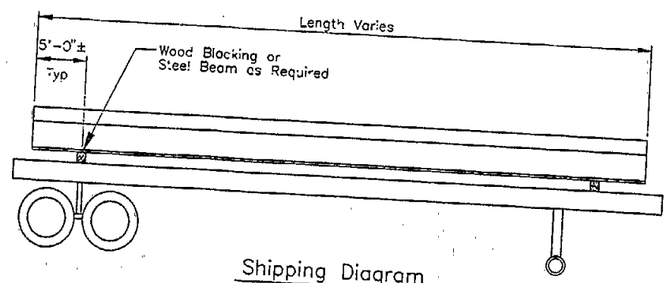

Shipping Diagram

DO NOT STACK MORE THAN (1) UNIT HIGH

**VEHICLE CONFIGURATION (TOTAL HEIGHT, LENGTH, AND WIDTH), AXLE LOADS AND AXLE DISTRIBUTION TO COMPLY WITH LOCAL AND STATE LAWS & REGULATIONS.

GENERAL NOTES

B1) Provide materials and workmanship in accordance with Specifications, Publication 408 with interim revisions, AASHTO/AWS Bridge Welding Code, and contract special provisions.

B2) All structural steel material and fabrication shall comply with Publication 408, Section 1105, Fabricated Structural Steel. All steel shall meet A572, yield 50 ksi.

B3) Provide 2" concrete cover for reinforcement, except as noted.

B4) Provide cement concrete in deck slab having fc' = 5,000 PSI @ 28 Days, in accordance with Publication 408, Section 704.

B5) Entrained air in concrete in accordance with Publication 408, Section 714.

B6) Reinforcing steel bars shall meet the requirements of Publication 408, Section 709.1. Epoxy coat all reinforcing steel bars in accordance with Publication 408, Section 709.1(d). Provide minimum lap splices and embedment length in accordance with BC-736.

B7) Reinforcement layout and spacing in bridge deck shall be as shown on sheet 3 of 3.

B8) Chamfer exposed concrete edges 1" x 1", except as noted.

B9) Superstructure dimensions shown are for a normal temperature of 68°F

B10) All fasteners are 7/8" ø High Strength bolts except as noted, meeting the requirements of Publication 408, Section 1105.02(d).

B11) Provide welded stud shear connectors as per Publication 408, Section 1105.02(e).

B12) Paint structural steel in accordance with Publication 408, Section 1060.

B13) Non-shrink grout mortar to meet Publication 408, Section 1080.2(c).

B14) Provide approved elastomeric concrete grout.

B15) Bridge Deck Finish to be coarse or No. 3 sandblast formliner finish. Sawcut transverse grooves in deck after or before erection in accordance with Publication 408, Section 501-3(j)-4 as specified.

B16) The Design Engineer will be responsible for the following:
- a) Supplying design criteria;
- b) Determining paint type and color;
- c) End of deck/backwall details;
- d) Checking the final design and shop drawings;
- e) Providing an erection procedure (including sequencing).
- f) Bearing types and details.
- g) Designing Substructure.
- h) Establishing the bridge geometry.
- i) Identifying scupper type and location.

B17) The fabricator(The Fort Miller Co., Inc.) will provide the following to the contractor:
- a) A preliminary design to the designer (including beam forces...DL,LL,LL+I, Bridge Ratings etc.);
- b) Shop drawings;
- c) Fabricated units in accordance with the shop drawings;
- d) On-site advisory assistance.

B18) The contractor will be responsible for the following:
- a) Providing any revisions to the erection procedure for approval before erection.
- b) Erecting the Inverset Units;
- c) Grouting joints and installing diaphragms as indicated;
- d) Saw cut transverse grooves in deck;
- e) Installing parapet as specified;
- f) Completing other work as specified.
- g) Providing & installing bearings as specified.

B19) Preparation of Grouted Joints - Prior to shipping, the contractor shall completely remove all oil, grease, dirt or material that would prevent bonding. Just prior to erection, clean the joint surface with compressed air, clean stiff-bristle fiber brushes or vacuum

B20) Scuppers, when specified, to be installed in accordance with BC-751. Consult fabricator for additional details as required.

NOTE: INVERSET™ IS A PATENTED STRUCTURAL SYSTEM MANUFACTURED UNDER A LICENSE FROM ITS OWNER, THE KEITH AND GROSSMAN LEASING CO., NORMAN, OK.

NO	DATE	BY	REVISIONS

Ryan-Biggs Associates, P.C.
201 River Street
Troy, New York 12180
(518) 272-0266

STANDARD DRAWINGS

BD-601	CONCRETE DECK SLAB
BD-611	CONCRETE DIAPHRAGMS FOR STEEL I-BEAMS
BD-621	REINFORCED CONCRETE ABUTMENTS
BC-736	REBAR FABRICATION DETAIL
BC-751	BRIDGE DRAINAGE
BC-752	CONCRETE DECK SLAB DETAILS
BC-753	STEEL GIRDER DETAILS
BC-754	STEEL DIAPHRAGMS
BC-766	PREFORMED NEOPRENE COMPRESSION SEAL JOINT
BC-767	NEOPRENE STRIP SEAL DAM

PADOT DWG. No. 90-117DE

THE FORT MILLER Co., Inc.
P.O. BOX 98
SCHUYLERVILLE, NY 12871
(518) 695-5000
FAX: (518) 695-4970

DATE: 8/1/96
DRN. BY: BARBER
CHK. BY: MAZ, PJS
SCALE: NONE

DWG. NO. SPI C:\INVERSET\PD1.DWG
SHEET NO. 2 OF 4

COMMONWEALTH OF PENNSYLVANIA
DEPARTMENT OF TRANSPORTATION

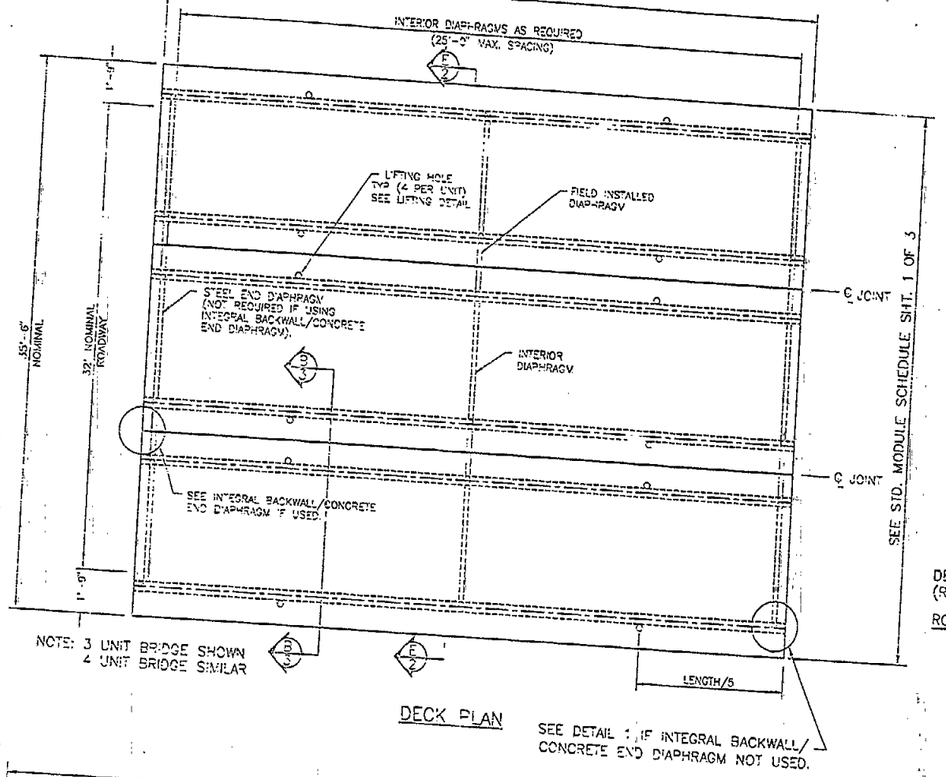

DECK PLAN

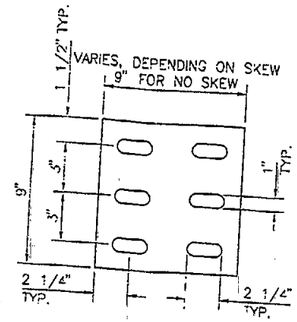

PLATE DETAIL
1/2" ASTM A36 GALV. ℞

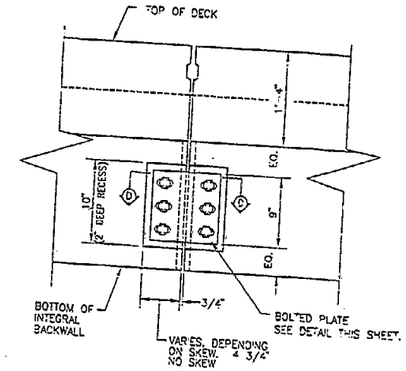

ELEVATION C–C

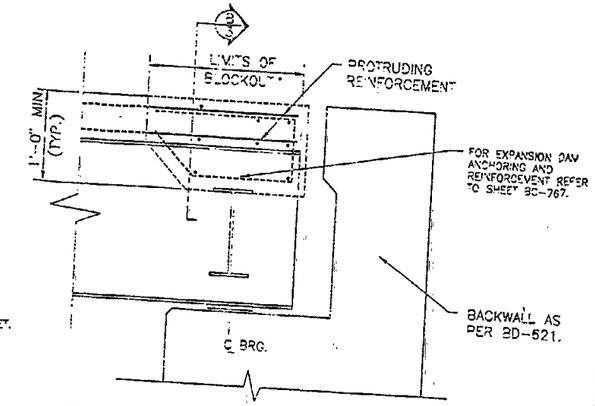

*NOTE: REINFORCEMENT WITHIN CAST IN PLACE HAUNCH AS PER TYPICAL SECTION AT ABUTMENT (STEEL BEAMS) BC-767, SHEET 2 OF 3.

DETAIL 1
WITH CAST IN PLACE BACKWALL

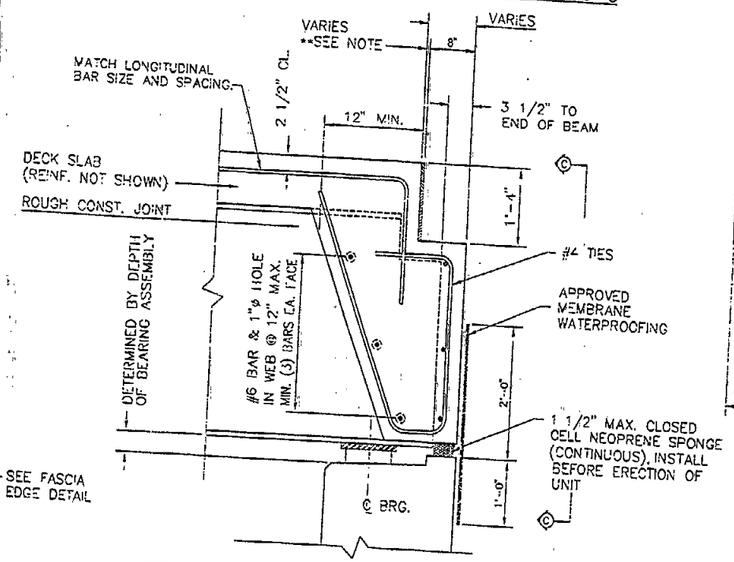

*NOTE: 1 1/2" COVER TYP. UNLESS OTHERWISE NOTED.
**NOTE: DESIGN JOINT TO ACCOMMODATE THERMAL MOVEMENT AND ROTATION FOR SPANS GREATER THAN 50 FT.

INTEGRAL BACKWALL/CONC. END DIAPHRAGM
SEE ALSO BD-611

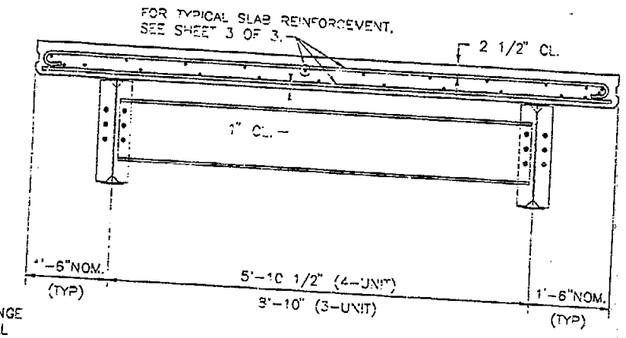

SECTION

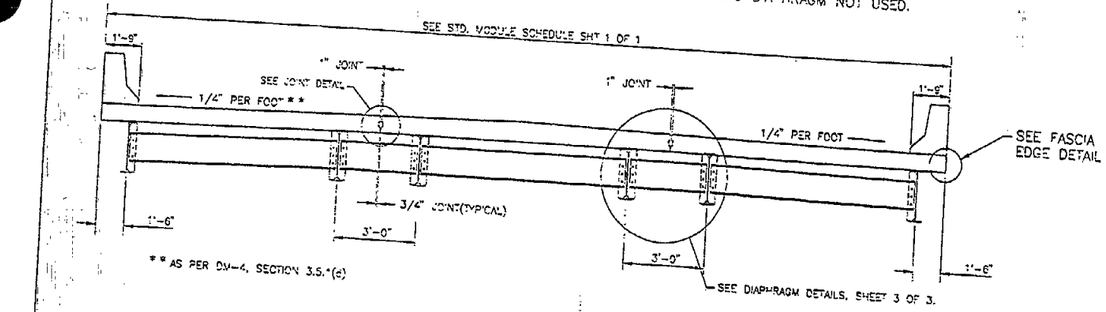

TYPICAL TRANSVERSE SECTION E–E
3 UNIT BRIDGE SHOWN
4 UNIT BRIDGE SIMILAR

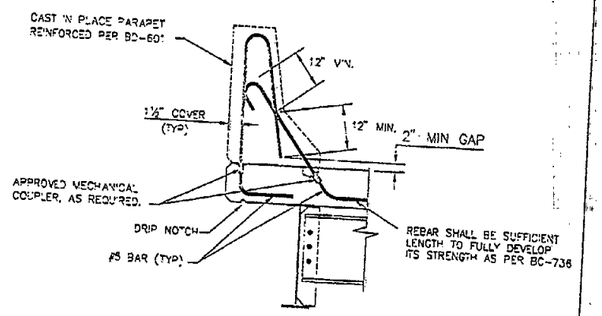

CAST IN PLACE PARAPET DETAIL
(MODIFY THIS DETAIL FOR CONCRETE MEDIAN BARRIER OR CONCRETE CURB)

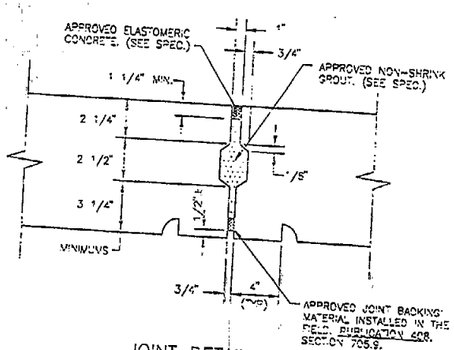

JOINT DETAIL

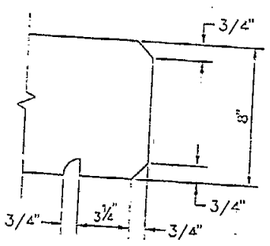

FASCIA EDGE DETAIL

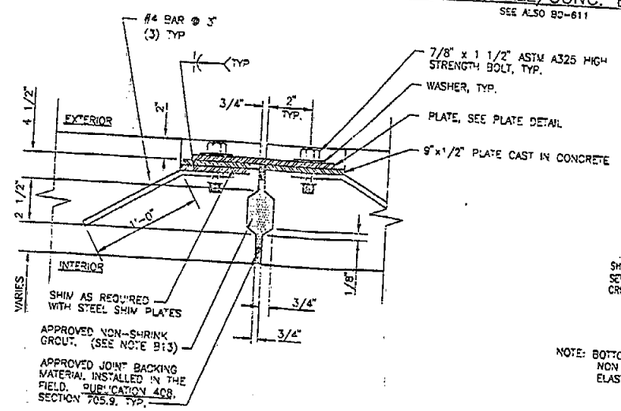

SECTION D–D

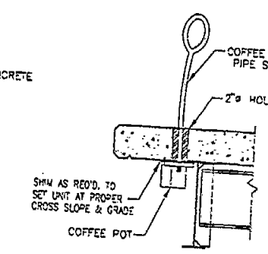

NOTE: BOTTOM 6 3/4" OF LIFTING HOLE TO BE FILLED WITH APPROVED NON SHRINK GROUT AND TOP 1 1/4" TO BE FILLED WITH ELASTOMERIC CONCRETE. (SEE NOTES B13 & B14)

LIFTING DETAIL

NO	DATE	BY	REVISIONS

THE FORT MILLER Co., Inc.
P.O. BOX 98
SCHUYLERVILLE, NY 12871
(518) 695-5000
FAX: (518) 695-4970

DATE: 08/1/96
DRN. BY: BARBER
DWG. NO. D1 C:\INVERSET\PD2.DWG
CHK. BY: MAZ, PJS
SHEET NO. 3 OF 4
SCALE: NONE

COMMONWEALTH OF PENNSYLVANIA
DEPARTMENT OF TRANSPORTATION
INVERSET™ BRIDGE STANDARD

PADOT DWG. No. 90-117PE

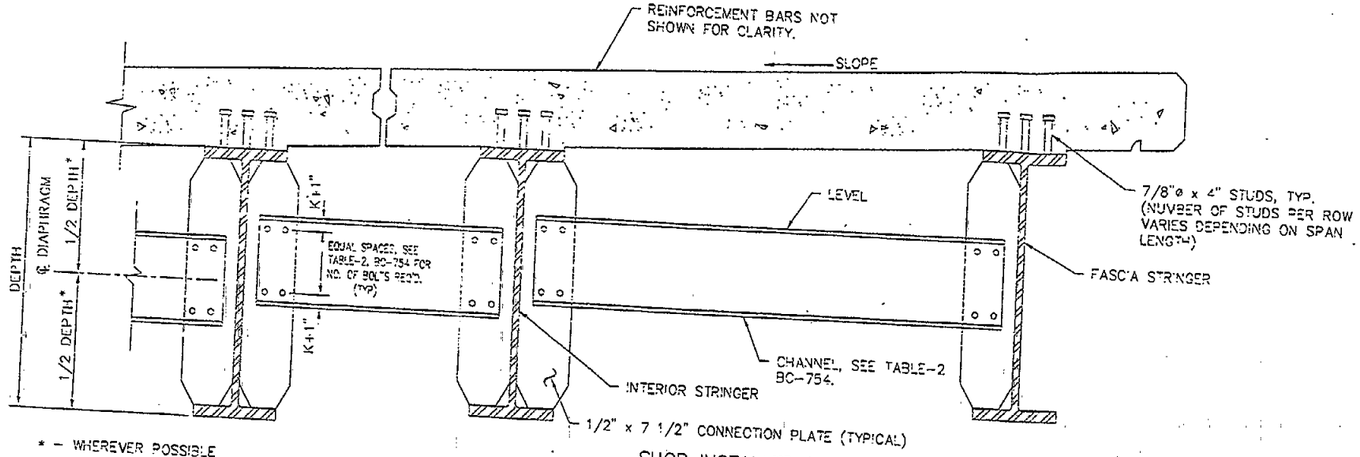

* – WHEREVER POSSIBLE

FIELD INSTALLED DIAPHRAGM

NOTE: FIELD DRILL ONE END OF DIAPHRAGM AFTER VERTICAL ADJUSTMENT IS COMPLETE – TYPICAL

SHOP INSTALLED DIAPHRAGM

INTERMEDIATE DIAPHRAGM

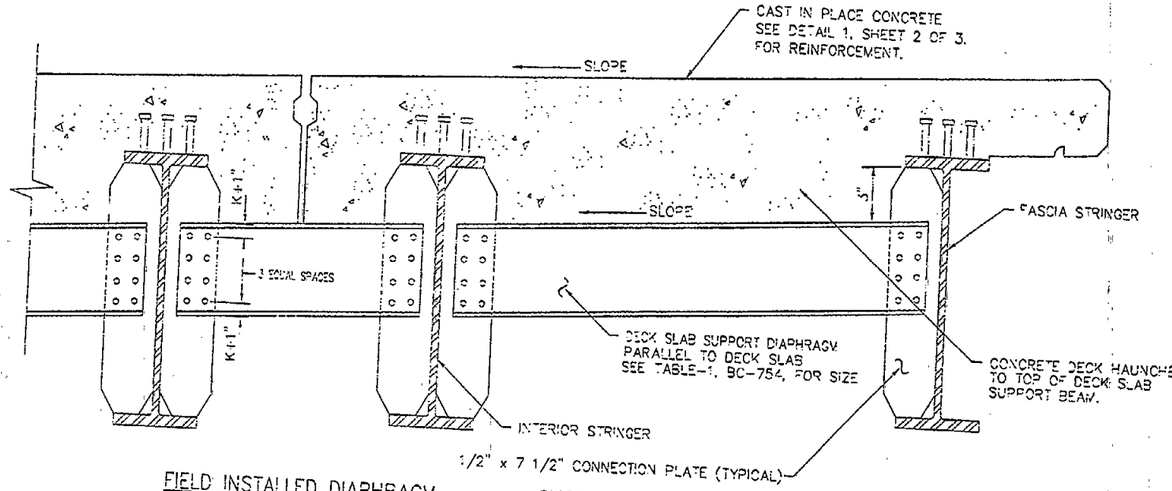

FIELD INSTALLED DIAPHRAGM

SHOP INSTALLED DIAPHRAGM

STEEL END DIAPHRAGM – SECTION B–B

(REQUIRED IF INTEGRAL BACKWALL IS NOT USED.) SEE NOTES C1 THROUGH C4, SHEET 1 OF 3.

*NOTE: SEE TABLE-1 BC-754 FOR DIAPHRAGM SIZE.

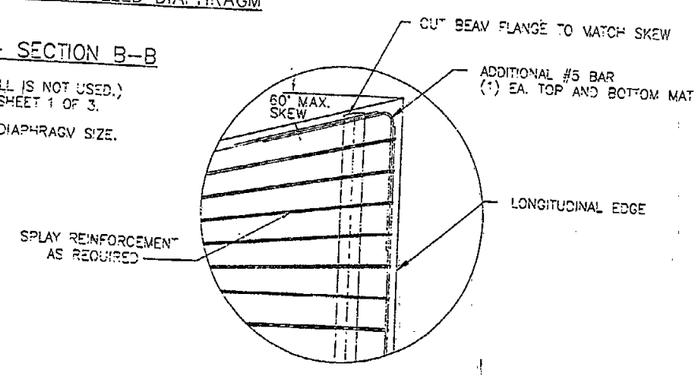

SKEWED END DETAIL

PLAN VIEW

NOTE: INVERSET™ IS A PATENTED STRUCTURAL SYSTEM MANUFACTURED UNDER A LICENSE FROM ITS OWNER, THE KEITH AND GROSSMAN LEASING CO., NORMAN, OK.

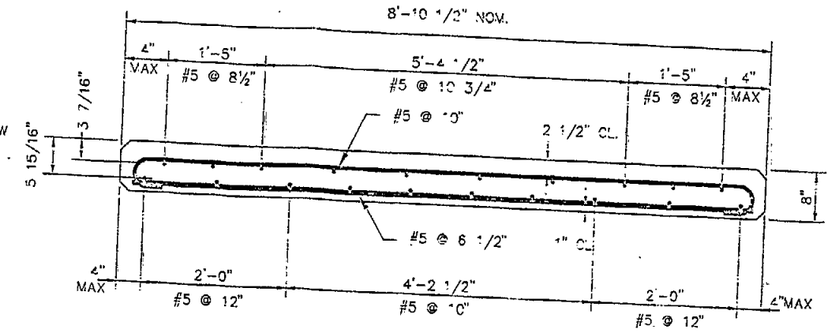

NOTE: JOINT EDGE OR FASCIA EDGE DETAILS AS REQUIRED, SEE SHEET 2 OF 3.

SLAB REINFORCEMENT – (4–UNIT)

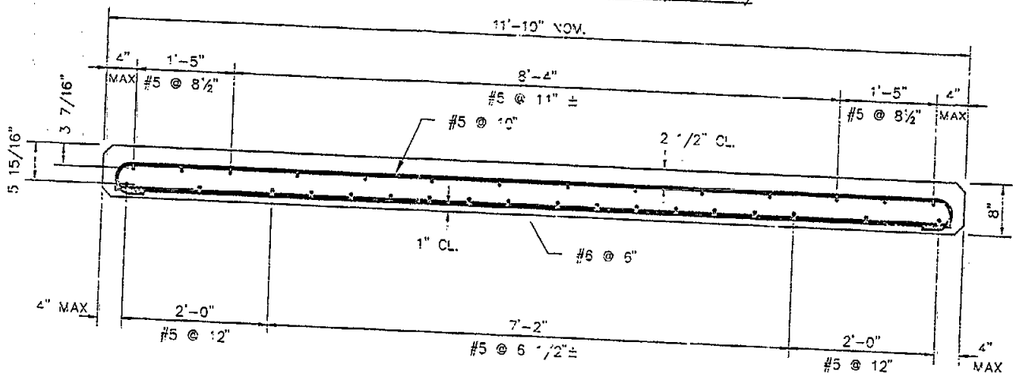

NOTE: JOINT EDGE OR FASCIA EDGE DETAILS AS REQUIRED, SEE SHEET 2 OF 3.

SLAB REINFORCEMENT – (3–UNIT)

NOTE:

SEE SHT 2 OF 4 FOR ALL NOTES.

ALL DETAILS FOR DIAPHRAGMS AND SHEAR CONNECTORS (STUDS) REFER TO BC-753 AND BC-754.

NO	DATE	BY	REVISIONS

THE FORT MILLER Co., Inc.
P.O. BOX 98
SCHUYLERVILLE, NY 12871
(518) 695-5000
FAX: (518) 695-4970

DATE: 08/1/96

DRN. BY: HARRIGAN

DWG. NO. D1 C:\INVERSET\PD3.DWG

CHK. BY: MAZ, PJS

SHEET NO. 4 OF 4

SCALE: NONE

COMMONWEALTH OF PENNSYLVANIA
DEPARTMENT OF TRANSPORTATION

INVERSET™ BRIDGE STANDARD

PADOT DWG. No. 90-117PE

Product:

Precast Concrete Diaphragms for
Prestressed Concrete I-Beams

Approval Date:

December 9, 1996

Initiated By SOL:

431-96-51

Application/Use:

Precast concrete diaphragms that may be used in lieu of cast-in-place diaphragms in prestressed concrete I-beam superstructures.
Precast diaphragms may be used in original design, as alternate, or in a value engineering proposal.
Precast end diaphragms as shown on the drawing may only be used as partial depth diaphragms in conjunction with back walls.
For the present, precast diaphragms may only be used in structures designed using AASHTO simplified analysis. They cannot be used in structures designed with finite element analysis or other sophisticated methods.
For alternate designs or approved V.E. proposals utilizing these precast diaphragms, the contractor is required to revise the as-designed structure plans showing the appropriate details in accordance with the attached drawings.

Specifications:

Special provision is attached.

Standard Drawings:

Attached is a copy of Standard Detail Drawings PADOT Drawing #95-604-BQAD (Dated 11/25/96).

Comment:

While details and erection procedures for these precast diaphragms have been reviewed and field tested in a mock-up at a prestress fabrication’s facility, feedback is requested from Department staff on actual field installations and any recommendations to improve the product or its installation procedures.

FHWA approval for the use of precast diaphragms in accordance with this letter has been secured.

SECTION 1080 PRESTRESSED CONCRETE BRIDGE SUPERSTRUCTURE

SECTION 1080.2 MATERIAL. ***Add the following:***

SECTION 1080.2(e) Precast Concrete Diaphragms. Prepare design computations and shop drawings for fabrication, erection, and post-tensioning as indicated in accordance with Drawing No. 95-604-BQAD. Drawing No. 95-604 BQAD (Dated 11/25/96), including design, material and fabrication requirements are available upon request from District Contract Management Office. Submit design computations and shop drawings for review prior to fabrication of precast concrete diaphragms.

- Precast Concrete Diaphragms. Section 714
- Post Tensioning. Section 1108
- Styrofoam Cushion. ASTM C-578, Type 1
- Cement Concrete, HES. Section 704

SECTION 1080.3(g) Precast Concrete Diaphragms Between Prestressed Concrete I-Beams. Erect Precast concrete diaphragms as shown on submitted and accepted shop drawings. At the bridge site, diaphragms will be inspected again for possible damage and cracking during shipment and for tolerances, and dimensions. Replace diaphragms damaged by improper storing, handling, transporting, erecting, or any other reason.

SECTION 1080.4 ***Revise as follows:***

SECTION 1080.4(i) Reinforcement Bars. Add the following:

Payment for reinforcement in precast concrete diaphragm will be as indicated on the approved shop drawing.

SECTION 1001.4(n) Cement Concrete Structures. Add the following:

Precast concrete diaphragms will be measured and paid as cubic yard of concrete as indicated or included in lump sum payment.

ATTACHMENT

I. **Description** - This work is the design, production, storage, delivery, and installation of precast concrete diaphragms to be used in prestressed concrete I-beam superstructures.

II. **Material**

a. Precast concrete diaphragms in accordance with PADOT Drawing #95-604-BQAD.

b. Other Material

* Class AA Cement Concrete. Section 704
* ½ ø Polystrand, Section 1107.02 (m)3.c
* Reinforcement bars, Section 1002.
* Non-shrink, Non-staining Grout, Section 1080.2(c)
* Styrofoam, Section 1107.02 (k)

III. **Construction**

(a) Design. Provide design in accordance with PADOT Drawing #95-604-BQAD.

(b) Provide approved shop drawings before fabricating precast diaphragms. Shop drawings to meet the general requirement of Section 105.02(d)

(c) Precast diaphragms will be inspected by Department representatives during fabrication process.

(d) Replace precast diaphragms damaged by improper storage, handling, transportation or erection.

(e) Do not ship precast diaphragms until 28 day strength has been reached.

(f) Erection Procedure

1. Erect precast diaphragms making sure to align holes thru beams and ducts in diaphragms. (Wedge if necessary).

2. Do not let precast diaphragms rest on bottom flange of P/S I-beams without 1" thick 3" x 12" styrofoam cushion.

3. Adjust wood end closures as required to seal joints between beams and diaphragms.

4. Place ½" 270 vinyl sheathed strand thru holes in beams and ducts in diaphragms. Keep one end of strand projecting from face of beam for 3'-0"±.

5. Seal anchorage blockouts in fascia beams with styrofoam or other suitable material.

6. Fill the pockets between beams and diaphragms with Class "AA" concrete.

7. After concrete is cured, remove wood end closures from diaphragms and anchorage blockout seals in web of beams.

8. After concrete has reached 3,500 psi, tension ½" strand to 30 kips.

9. After tensioning of strand, cut off ends and patch anchorage blockouts in web of beams with non-staining, non-shrink grout.

10. Filling the ½" thermoplastic insert cast into the diaphragms for end closures with non-staining, non-shrink grout is not required.

IV. **Measurement and Payment** - lump sum.

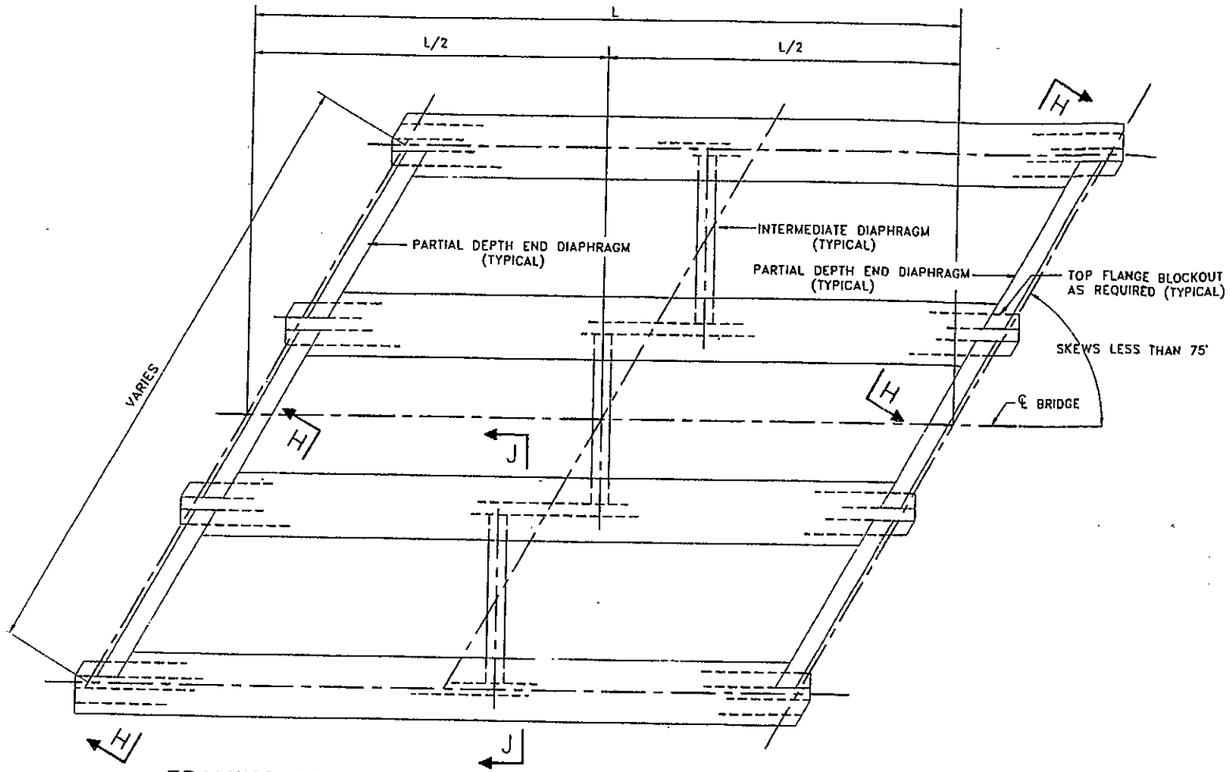

FRAMING PLAN – SKEWS LESS THAN 75°

N.T.S.

NOTE:

SEE SHEET 1 OF 3 FOR BRIDGES WITH SKEWS BETWEEN 75° AND 90°.

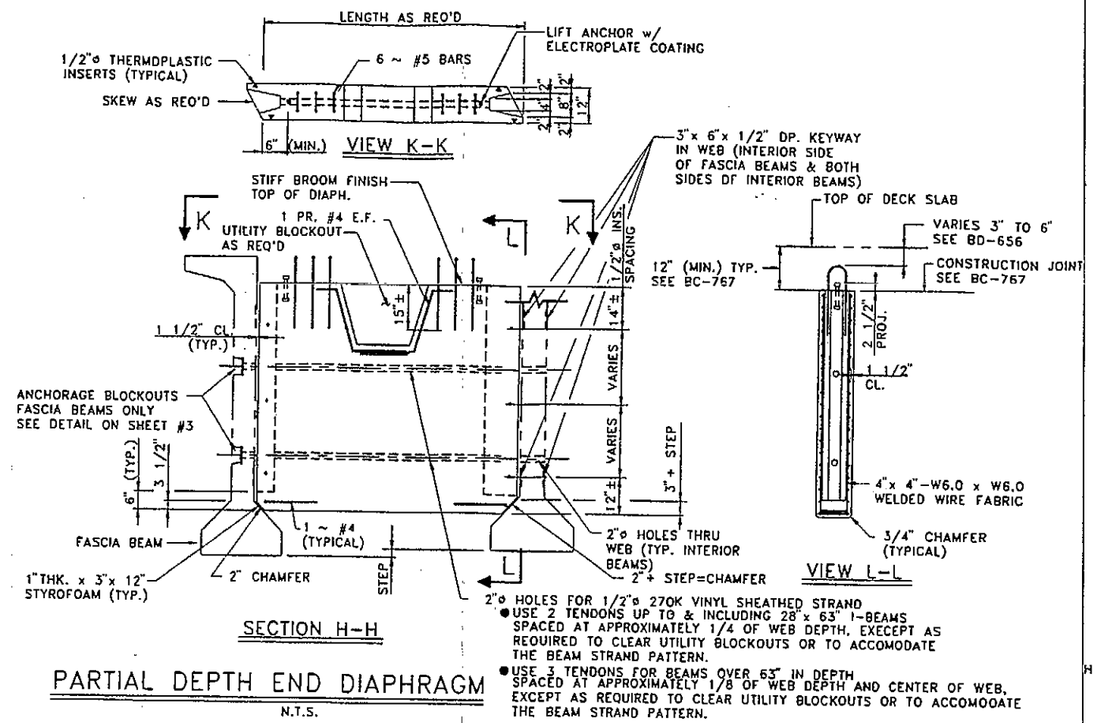

PARTIAL DEPTH END DIAPHRAGM

N.T.S.

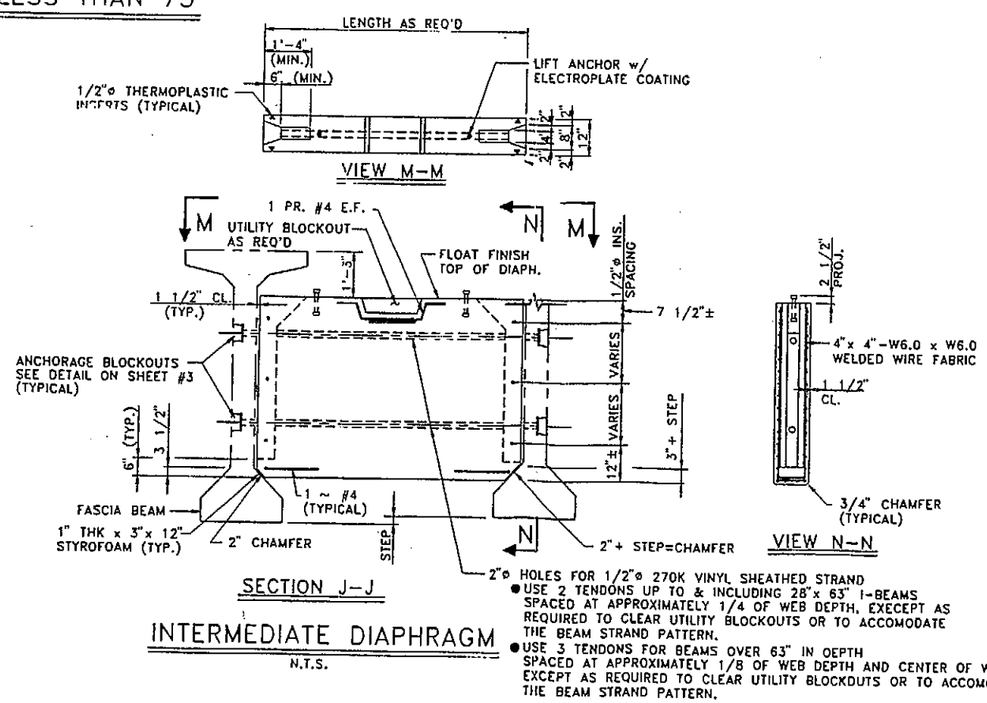

INTERMEDIATE DIAPHRAGM

N.T.S.

● THIS STANDARD IS SUBJECT TO THE REQUIREMENTS OF PENN PUB. 408/94 SECTION 107.03.

COMMONWEALTH OF PENNSYLVANIA
DEPARTMENT OF TRANSPORTATION
DRAWING APPROVAL
RECOMMENDED BY: M. G. Patel 11/5/96
DIRECTOR, BUREAU OF DESIGN DATE

MARK	DESCRIPTION	BY	CHK'D	APP'D
	REVISIONS			

COMMONWEALTH OF PENNSYLVANIA
DEPARTMENT OF TRANSPORTATION
BUREAU OF DESIGN

PRECAST CONCRETE DIAPHRAGMS FOR PRECAST CONCRETE I-BEAM BRIDGES

PADOT DWG. # 95-604-BQAD | DATE 11/20/96 | SH 2

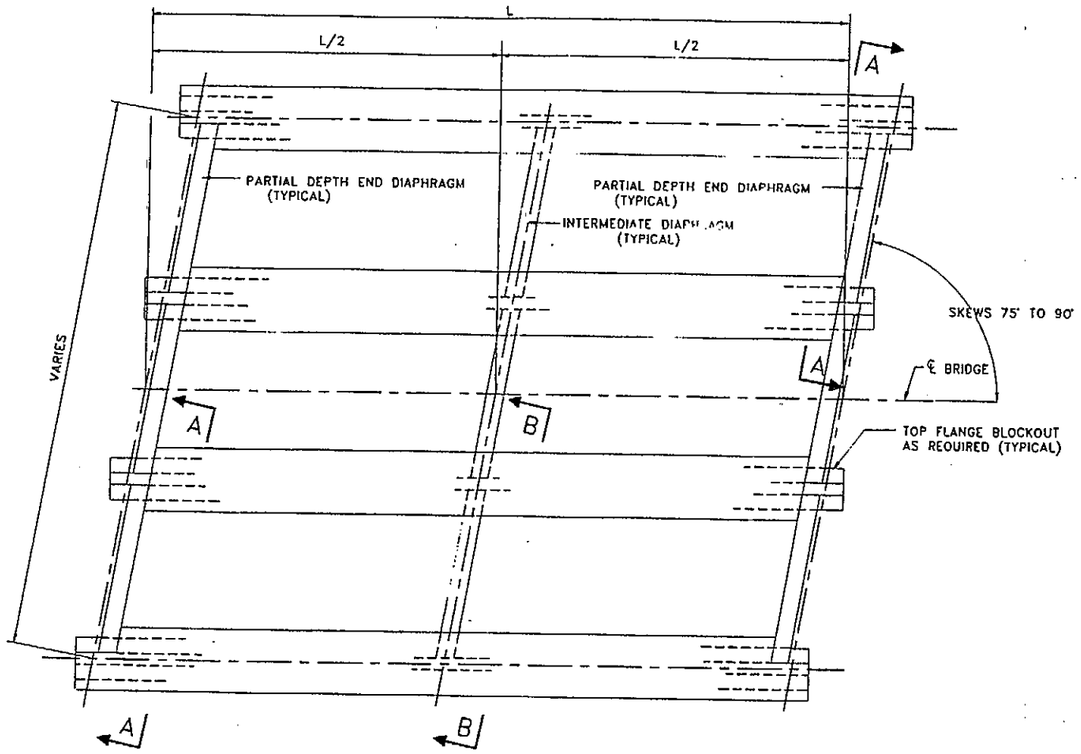

FRAMING PLAN – 75° TO 90° SKEW

N.T.S.

NOTE:

- SEE ALSO SHEET 2 OF 3 FOR BRIDGES WITH SKEWS LESS THAN 75°.

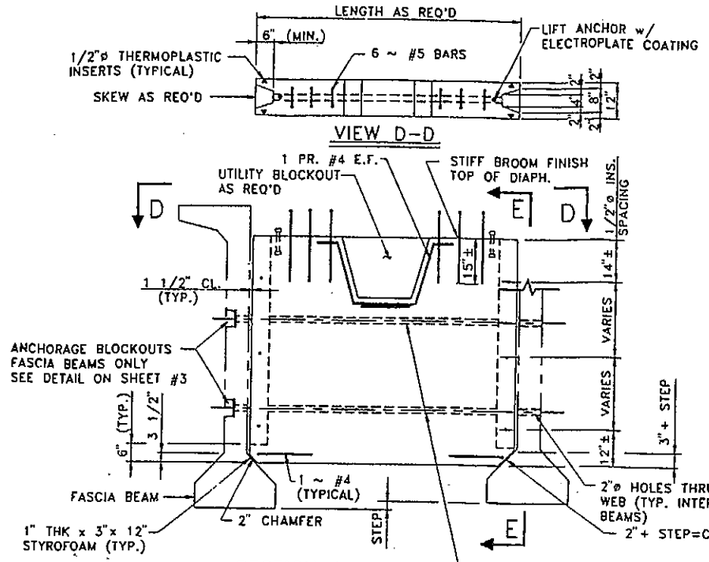

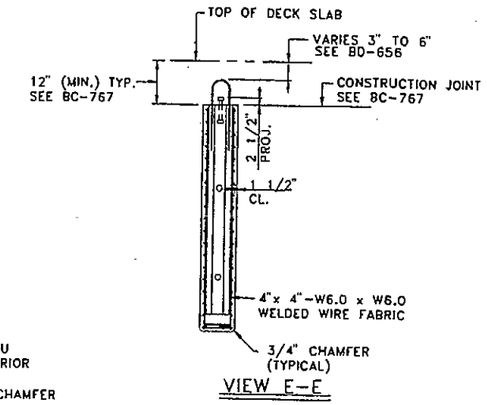

PARTIAL DEPTH END DIAPHRAGM

N.T.S.

- 2"ø HOLES FOR 1/2"ø 270K VINYL SHEATHED STRAND
- USE 2 TENDONS UP TO & INCLUDING 28"x 63" I-BEAMS SPACED AT APPROXIMATELY 1/4 OF WEB DEPTH, EXCEPT AS REQUIRED TO CLEAR UTILITY BLOCKOUTS OR TO ACCOMODATE THE BEAM STRAND PATTERN.
- USE 3 TENDONS FOR BEAMS OVER 63" IN DEPTH SPACED AT APPROXIMATELY 1/8 OF WEB DEPTH AND CENTER OF WEB, EXCEPT AS REQUIRED TO CLEAR UTILITY BLOCKOUTS OR TO ACCOMODATE THE BEAM STRAND PATTERN.

GENERAL NOTES

- MATERIALS AND WORKMANSHIP SHALL BE IN ACCORDANCE WITH PENN. D.O.T. PUBLICATION 408 AND THE CONTRACT SPECIAL PROVISIONS.
- PROVIDE 1 1/2" CLEARANCE ON REINFORCING UNLESS NOTED OTHERWISE.
- CONCRETE FOR PRECAST DIAPHRAGMS SHALL BE CLASS "AA".
- THE COARSE AGGREGATES USED IN THE CLASS "AA" CONCRETE MIX FOR FILLING THE POCKETS BETWEEN THE DIAPHRAGM AND THE BEAM SHALL BE NO LARGER THAN 3/8".
- TEMPERATURES SHALL NOT EXCEED 120° FOR ACCELERATED CURING OF CONCRETE.
- ALL REINFORCEMENT SHALL BE EPOXY COATED.
- THIS STANDARD IS SUBJECT TO THE REQUIREMENTS OF PENNDOT PUB. 408/94 SECTION 107.03.

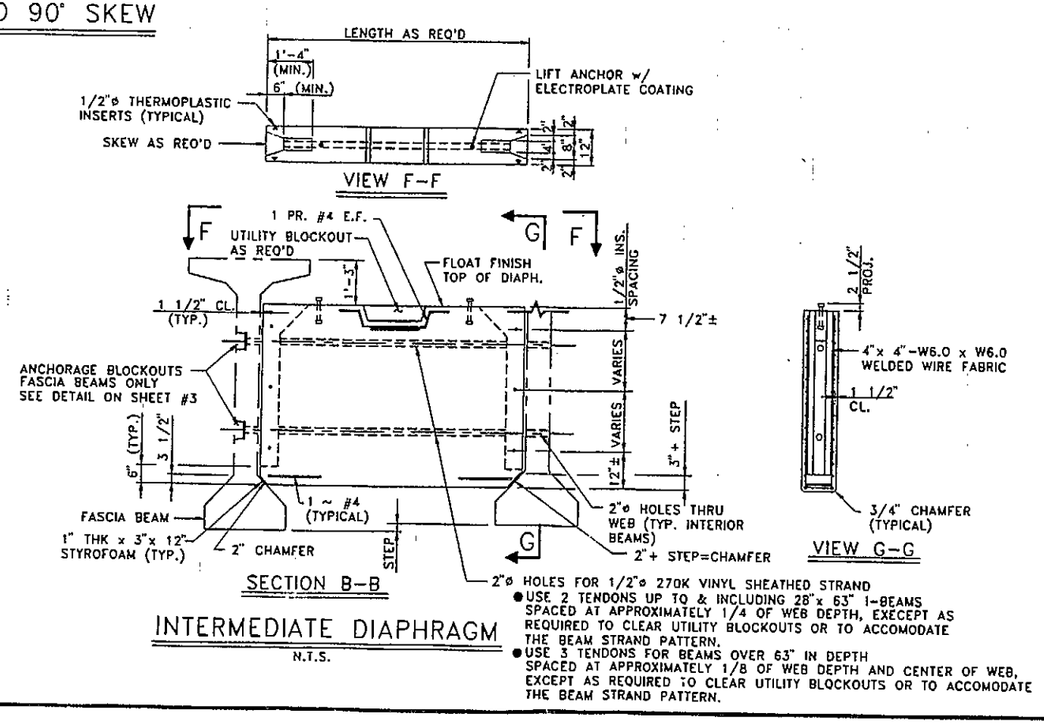

INTERMEDIATE DIAPHRAGM

N.T.S.

- 2"ø HOLES FOR 1/2"ø 270K VINYL SHEATHED STRAND
- USE 2 TENDONS UP TO & INCLUDING 28"x 63" I-BEAMS SPACED AT APPROXIMATELY 1/4 OF WEB DEPTH, EXCEPT AS REQUIRED TO CLEAR UTILITY BLOCKOUTS OR TO ACCOMODATE THE BEAM STRAND PATTERN.
- USE 3 TENDONS FOR BEAMS OVER 63" IN DEPTH SPACED AT APPROXIMATELY 1/8 OF WEB DEPTH AND CENTER OF WEB, EXCEPT AS REQUIRED TO CLEAR UTILITY BLOCKOUTS OR TO ACCOMODATE THE BEAM STRAND PATTERN.

COMMONWEALTH OF PENNSYLVANIA
DEPARTMENT OF TRANSPORTATION
BRIDGE ACCEPTANCE

RECOMMENDED BY: M. G. Patel 11/20/96
CHIEF, BUREAU OF DESIGN — DATE

MARK	DESCRIPTION	BY	CHK'D	APP'D
	REVISIONS			

COMMONWEALTH OF PENNSYLVANIA
DEPARTMENT OF TRANSPORTATION
BUREAU OF DESIGN

PRECAST CONCRETE DIAPHRAGMS
FOR PRECAST CONCRETE
I-BEAM BRIDGES

PADOT DWG. # 95-604-BQAD | DATE 11/20/96 | SHE 1 OF

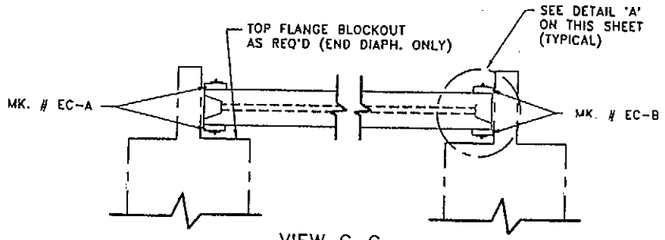

VIEW C-C

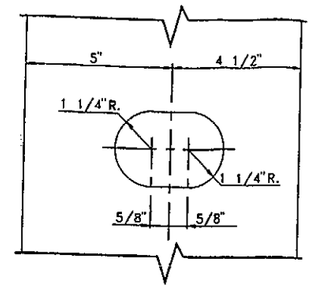

2 1/2" x 3 3/4" SLOTTED HOLE DETAIL

N.T.S.

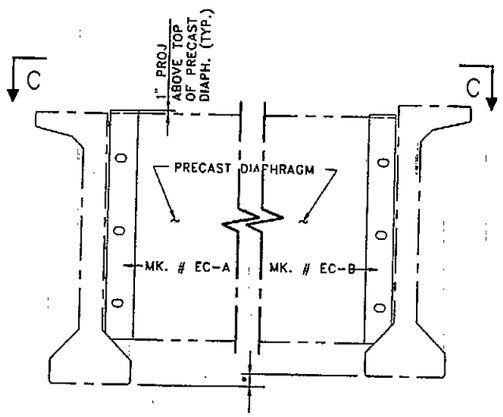

ELEVATION

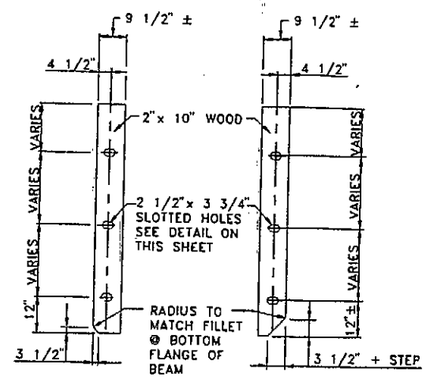

MK. # EC-A MK. # EC-B

2 EACH REQ'D PER DIAPHRAGM

DIAPHRAGM END CLOSURE DETAIL

N.T.S.

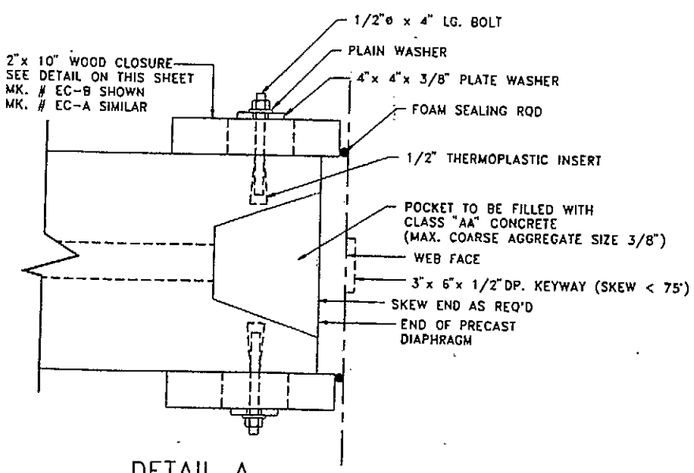

DETAIL A

N.T.S.

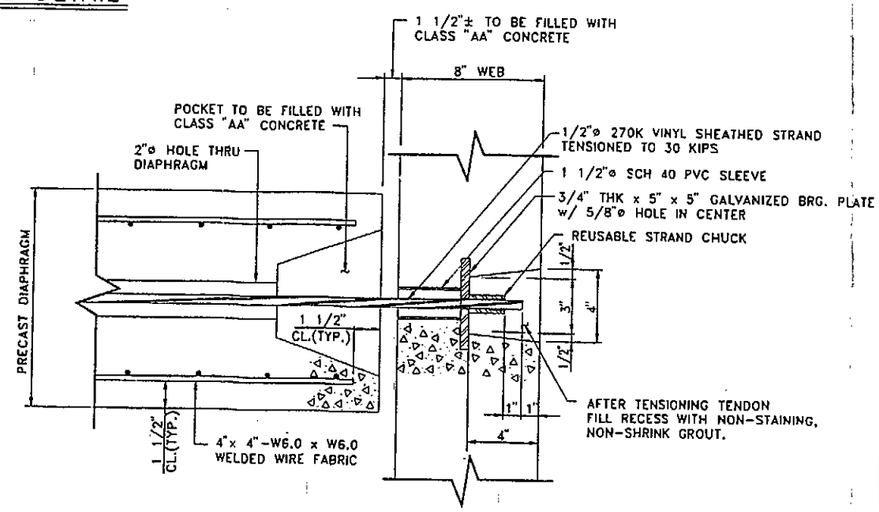

TENDON ANCHORAGE DETAIL

N.T.S.

ERECTION PROCEDURE FOR PRECAST DIAPHRAGMS

1. ERECT PRECAST DIAPHRAGMS MAKING SURE TO ALIGN HOLES THRU BEAMS & DUCTS IN DIAPHRAGMS. (WEDGE IF NECESSARY)
2. ADJUST WOOD END CLOSURES AS REQUIRED TO SEAL JOINTS BETWEEN BEAMS AND DIAPHRAGMS.
3. PLACE P/S TENDONS THRU HOLES IN BEAMS AND DUCTS IN DIAPHRAGMS. KEEP ONE END OF TENDONS PROJECTING FROM FACE OF BEAM FOR 3'-0"±.
4. SEAL ANCHORAGE BLOCKOUTS IN FASCIA BEAMS WITH STYROFOAM OR OTHER SUITABLE MATERIAL.
5. FILL THE POCKETS BETWEEN BEAMS AND DIAPHRAGMS WITH CLASS "AA" CONCRETE.
6. AFTER CONCRETE IS CURED, REMOVE WOOD END CLOSURES FROM DIAPHRAGMS AND ANCHORAGE BLOCKOUT SEALS IN WEB OF BEAMS.
7. AFTER CONCRETE HAS REACHED 3,500 PSI, TENSION TENDONS TO 30 KIPS.
8. AFTER TENSIONING OF TENDONS, CUT OFF ENDS AND PATCH ANCHORAGE BLOCKOUTS IN WEB OF BEAMS WITH NON-STAINING, NON-SHRINK GROUT.
9. FILLING THE 1/2"ø THERMOPLASTIC INSERT CAST INTO THE DIAPHRAGMS FOR END CLOSURES WITH NON-STAINING, NON-SHRINK GROUT IS NOT REQUIRED.

- THIS STANDARD IS SUBJECT TO THE REQUIREMENTS OF PENNI PUB. 408/94 SECTION 107.03.

COMMONWEALTH OF PENNSYLVANIA
DEPARTMENT OF TRANSPORTATION
DRAWING APPROVAL

RECOMMENDED BY: m.e.hitu 11/13/96
TRANSPORTATION ENGINEER

MARK	DESCRIPTION	BY	CHK'D	APP
	REVISIONS			

COMMONWEALTH OF PENNSYLVA
DEPARTMENT OF TRANSPORTATI
BUREAU OF DESIGN

PRECAST CONCRETE DIAPHRAGMS
FOR PRECAST CONCRETE
I-BEAM BRIDGES

PADOT DWG # 95-604-BQAD | DATE 11/20/96 | S 3

Product:

Approved Strip Seal Expansion
Joint Retainers, Pub. 408, Section 1026.2
Shop Drawing Review

Approval Date:

June 15, 1998

Initiated By SOL:

431-98-16

Application/Use:

Attached six sketches of approved Strip Seal Retainers are authorized to be used on Department projects.

Specifications:

None.

Standard Drawings:

The following manufacturers will furnish either extrusions or rolled sections that meet the basic requirements of the detail shown on BC-767, Sheet 2 of 3.

Manufacturer	Retainer Identification or Shop Drawing No.
Elastomeric Seals, Inc. 5 Di Tomas Court Copiague, New York 11726	SSP3
The D.S. Brown Company Inc. North Baltimore, Ohio 45872	SSPAO2SC
Watson, Bowman, ACME 95 Pineview Drive Amsherst, New York 14120	C-11382 C-12164 (to be used with Watson, Bowman, ACME Strip Seal Designation SV499 and SV500) C-14398
R. J. Watson, Inc.	#92-280-PEQ

The attached sketches are to be used as a reference in the review of shop drawings, and any variation therefrom may be cause for shop drawing disapproval.

In addition, the following requirements must be met for complete expansion dam fabrication:

a. When retainers are manufactured in two pieces a longitudinal full penetration weld is required to join the two parts; 25 % of the weld must be tested ultrasonically and if defects are found, 100% of the weld will be tested.

b. Transverse butt welds for splicing the retainers must be partial penetration double V-groove welds on prepared beveled V-groove welds on prepared beveled edges, extending all around the joint as far as practical to achieve a watertight seal. The seal cavity of course cannot be welded wherever a transverse joint occurs, two additional studs must be added on each side of the joint.

c. Studs may be piggy backed to achieve 20” length.

d. The seals furnished with the retainers must be compatible with the retainer and provide a watertight joint.

Comment:

Approval of these retainers was originally granted by way of Strike-off Letters 4310-89-28, 431-92-11, 431-92-14, and 431-92-54.

The above listed manufacturers and the approved strip seal retainers are also listed in Section 1026.2 if Bulletin 15 (Pub. #35).

OS-600 (2-85)

COMMONWEALTH OF PENNSYLVANIA
DEPARTMENT OF TRANSPORTATION

DATE: April 28, 1989

4310-89-28

SUBJECT: Strip Seal Expansion Joint Retainer

TO: All District Engineers

FROM: William R. Moyer, P. E.
Chief Engineer
Highway Administration

Attached are 3 sketches of approved strip seal retainers authorized to be used on Department projects immediately.

The following manufacturers will furnish either extrusions or rolled sections that meet the basic requirements of the detail shown on BC-767 Sheet 2 of 3:

Manufacturer	Retainer Ident. or Shop Drawing No.
Elastomer Seals, Inc. 5 DiTomas Court Copiague, New York 11726	SS-P3
The D. S. Brown Company, Inc. North Baltimore, Ohio 45872-0158	SSPA02SC
Watson, Bowman, Acme 95 Pineview Drive Amherst, New York 14120	C-11382

The attached sketches are to be used as a reference in the review of shop drawings, and any variation therefrom will be cause for shop drawing disapproval.

In addition, the manufacturers have been informed of the following additional requirements applicable to complete expansion dam fabrication:

a. A longitudinal full penetration weld is required to join the top and bottom (plate) of the retainer together when it is furnished in two pieces, 25% of the weld will be tested ultrasonically and, if defects are found, 100% of the weld will be tested.

-continued-

b. Transverse butt welds for splicing the retainer will be partial penetration double V-groove welds on prepared bevelled edges, extending all around the joint as far as practical to achieve a watertight seal. The seal cavity, of course, cannot be welded. Whenever a transverse joint occurs, two additional studs must be added on each side of the joint.

c. Studs may be piggy backed to achieve 10" length.

d. The seals furnished with the retainers must be compatible with the retainer and provide a watertight joint.

At the present time all expansion dam standards are being revised and will be re-issued. As part of the revisions, Strip Seal Standards BC-767, Sheets 1 - 3, will include the above requirements plus a conceptual erection scheme for installation of the strip seal expansion dam in deck block outs.

attachment

4310/HW/mh

CC: Mr. D. E. Zazworsky, P. E., Room 1220
Mr. W. R. Moyer, P. E., Room 1212
Mr. J. A. Filippino, P. E., Room 1212
Mr. F. W. Bowser, P. E., Room 1118
Mr. M. M. Ryan, P. E., Room 1004
Mr. G. L. Hoffman, P. E., Room 1009
Mr. K. R. Patel, P. E., Room 1009
Mr. W. Bortree, P. E. Room 105
Mr. H. Lathia, P. E., Room B-155
Mr. M. A. Marks, P. E., FHWA
Mr. J. B. Wilson, P. E., Turnpike Commission
Bureau of Design Division Chiefs
District Bridge Engineer, District_____
District Liaison Engineer, District_____
District Structural Control Engineer, District_____
Ms. Bev Cook, Room 1118
Design Consultants
Mr. Mark Miller, P. E., Mercer County Bridge Dept., Mercer County Courthouse, Mercer, PA 16137-0112
Mr. Peter Florian, Allegheny County Engineer, 501 County Office Building, Forbes Avenue and Ross Street, Pittsburgh, PA 15219
Mr. Alex Scuilli, City of Pittsburgh, Room 301, City-County Building, Pittsburgh, PA 15219
City of Philadelphia, Engineering Department, Room 215 City Hall, Philadelphia, PA 19107
Associated Pennsylvania Constructors

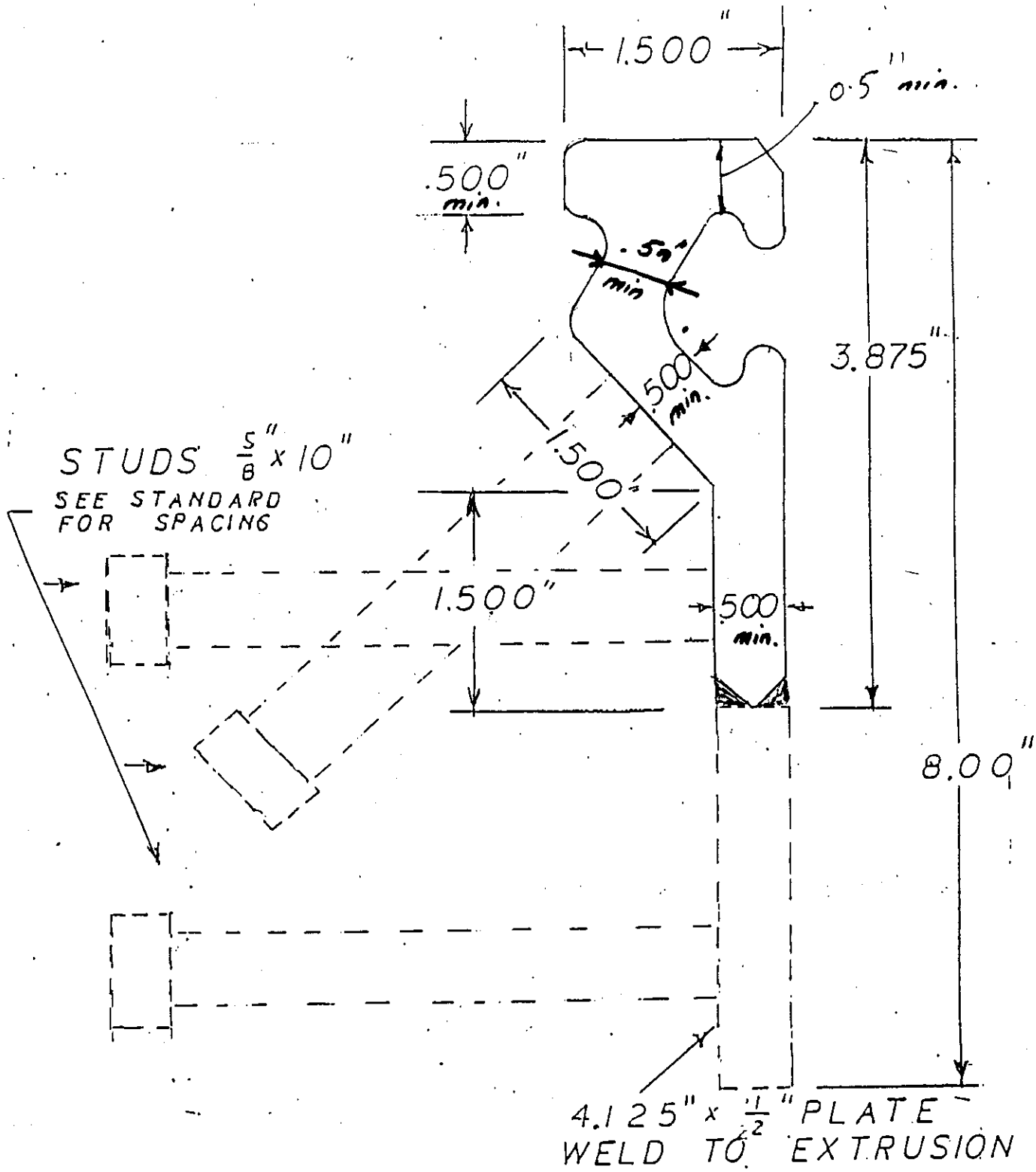

PENNA. DEPT. OF TRANS.
APPROVED AS NOTED
APR 25 1989
CHIEF BRIDGE ENGINEER
MGP.

ELASTOMER SEALS, INC. 5 DiTomas Court Copiague, New York 11726		Part No.	SS - P3
		Material	A-36
Dr. By.	Date 1·30·89	Print Ref. No.	
Ch. By.	Date	Scale	
		Specifications	

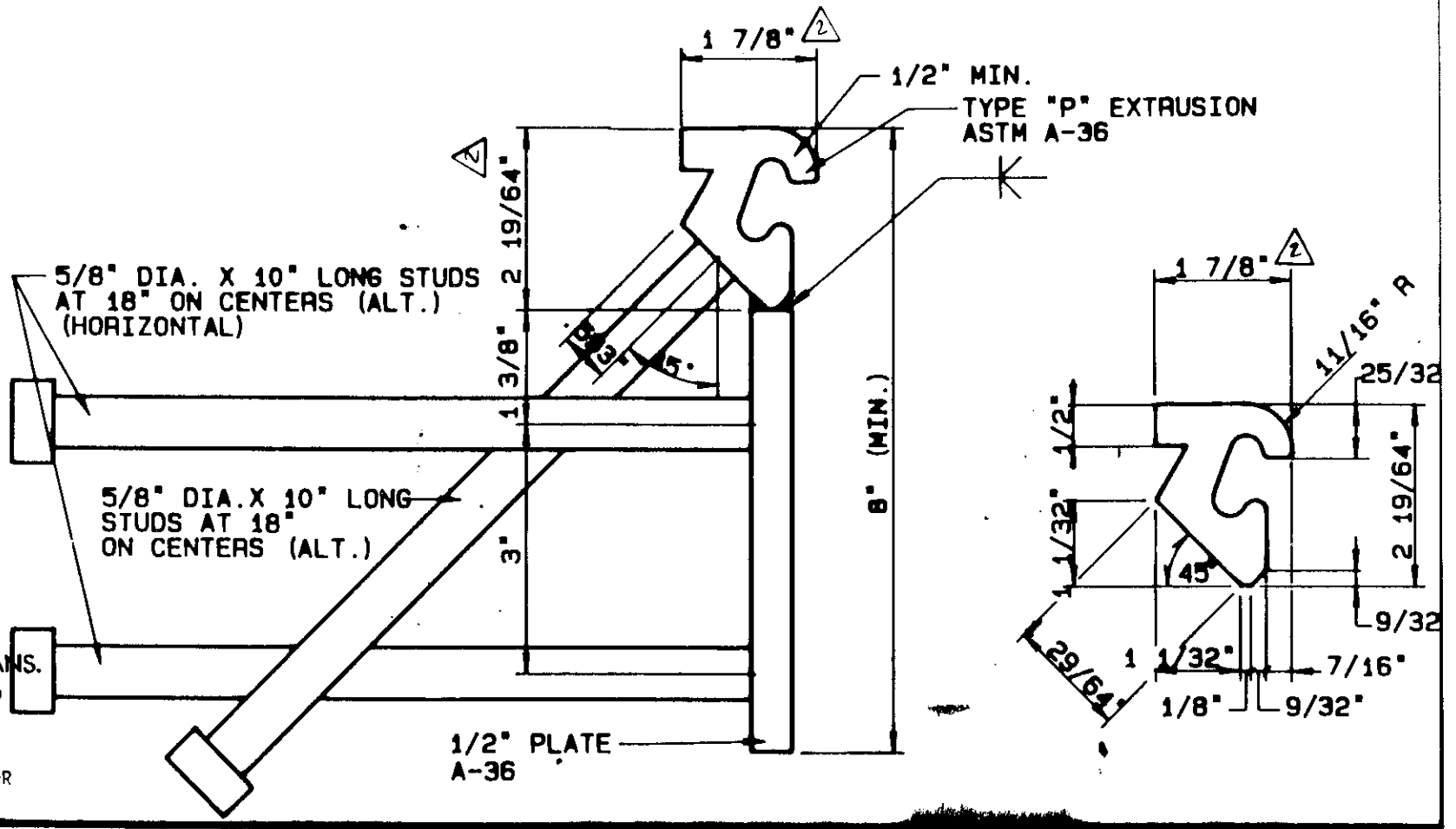

PENNA. DEPT. OF TRANS.
APPROVED [redacted]
APR 25 1989
CHIEF BRIDGE ENGINEER
MGP.

NO.	DESCRIPTION	NAME	DATE
4			
3			
2	SHAPE CHANGE		
1	SHAPE CHANGE	DJS	2-3-89

REVISIONS

[redacted]

[redacted]
95 Pineview Drive Amherst, N.Y. 14120 TEL. (716) 691-7566 FAX (716) [redacted]

PROJECT:
STATE OF PENNSYLVANIA
STEEL EXTRUSION PROPOSAL

TITLE:

DRAWN BY: MJO	DATE: 12-7-88
CHECKED BY: WW	DATE: 12-7-88
SCALE: 1=2	WBA JOB NO.: PROPOSAL
SHEET NO.: 1 OF 1	DRAWING NO.: 11382

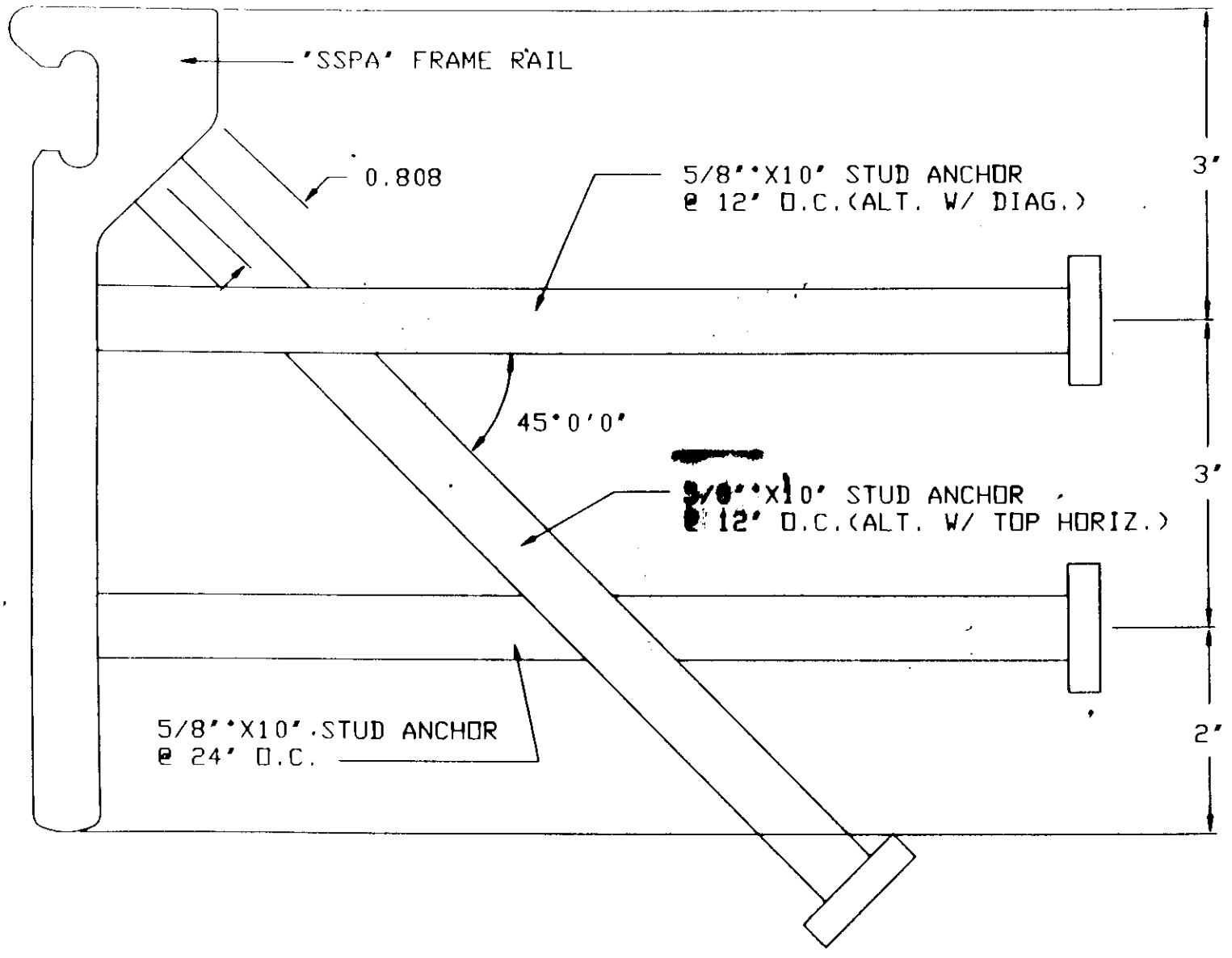

REVISION			
DATE	SYM	DESCRIPTION	BY

THE D.S. BROWN COMPANY, INC.
NORTH BALTIMORE, OHIO 45872-0158

PA STRIP SEAL W/ STUDS

[redacted] FULL

[redacted] 11-06-8[redacted]

SSPA-03

PENNA. DEPT. OF TRANS.
APPROVED [redacted]
CHIEF BRIDGE ENGINEER
MGP

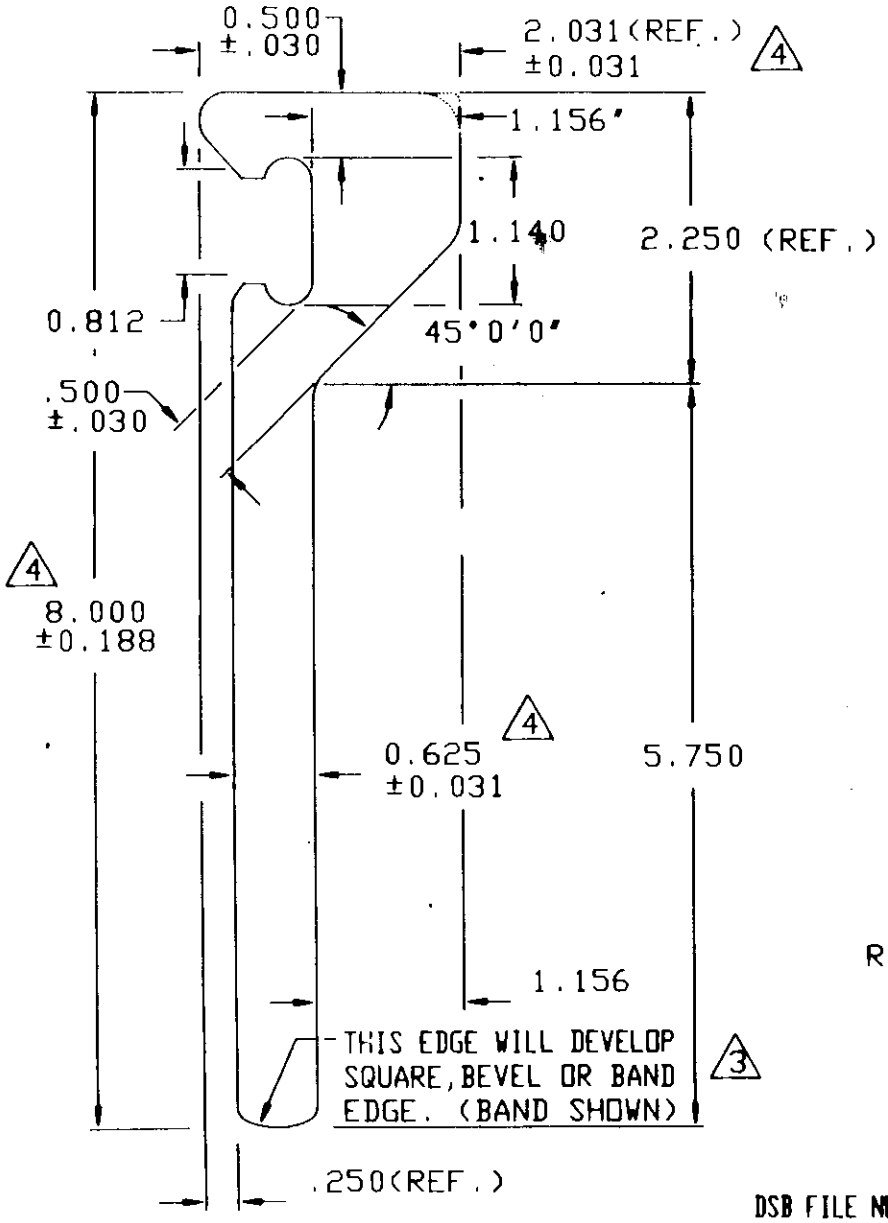

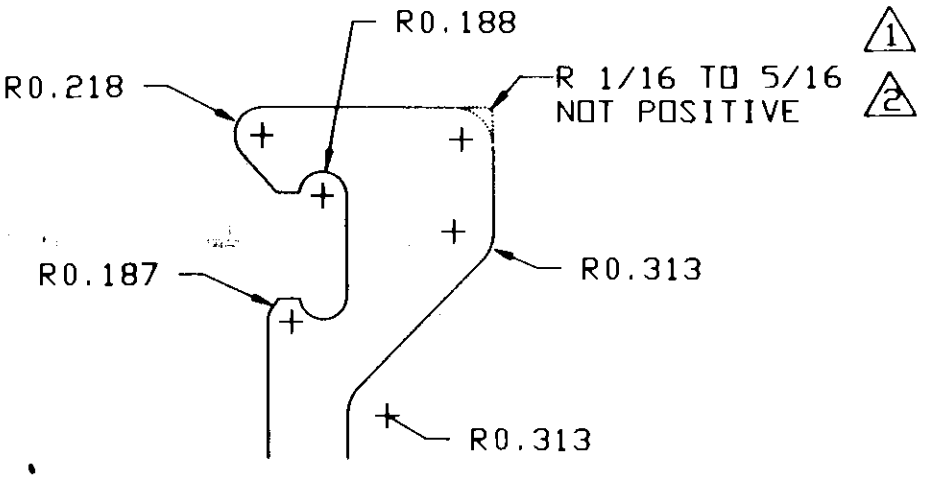

PENNA. DEPT. OF TRANS.
APPROVED AS NOTED
APR 25 1989
CHIEF BRIDGE ENGINEER
M.G.P.

REVISION 6 MOVE SEAL POCKET DOWN TO 0.500" 3-9-89

REVISION			
DATE	SYM	DESCRIPTION	BY
11-18-88	1	WAS 0.313	DHA
12-07-88	2	WAS 0.250	DHA
12-07-88	3	ADD EDGE NOTE	DHA
12-07-88	4	ADD TOLERANCES	DHA
1-26-89	5	WAS A588	DHA

THE D.S. BROWN COMPANY, INC.
NORTH BALTIMORE, OHIO 45872-0158

"SSPA" FRAME RAIL

DRAWN BY: DHA	SCALE: FULL	MATL. A36 5
CHECKED:	DATE: 11-18-88	DRAWING NO. SSPA02SC
APPD:		

DSB FILE NO:PA\SSPA02SC

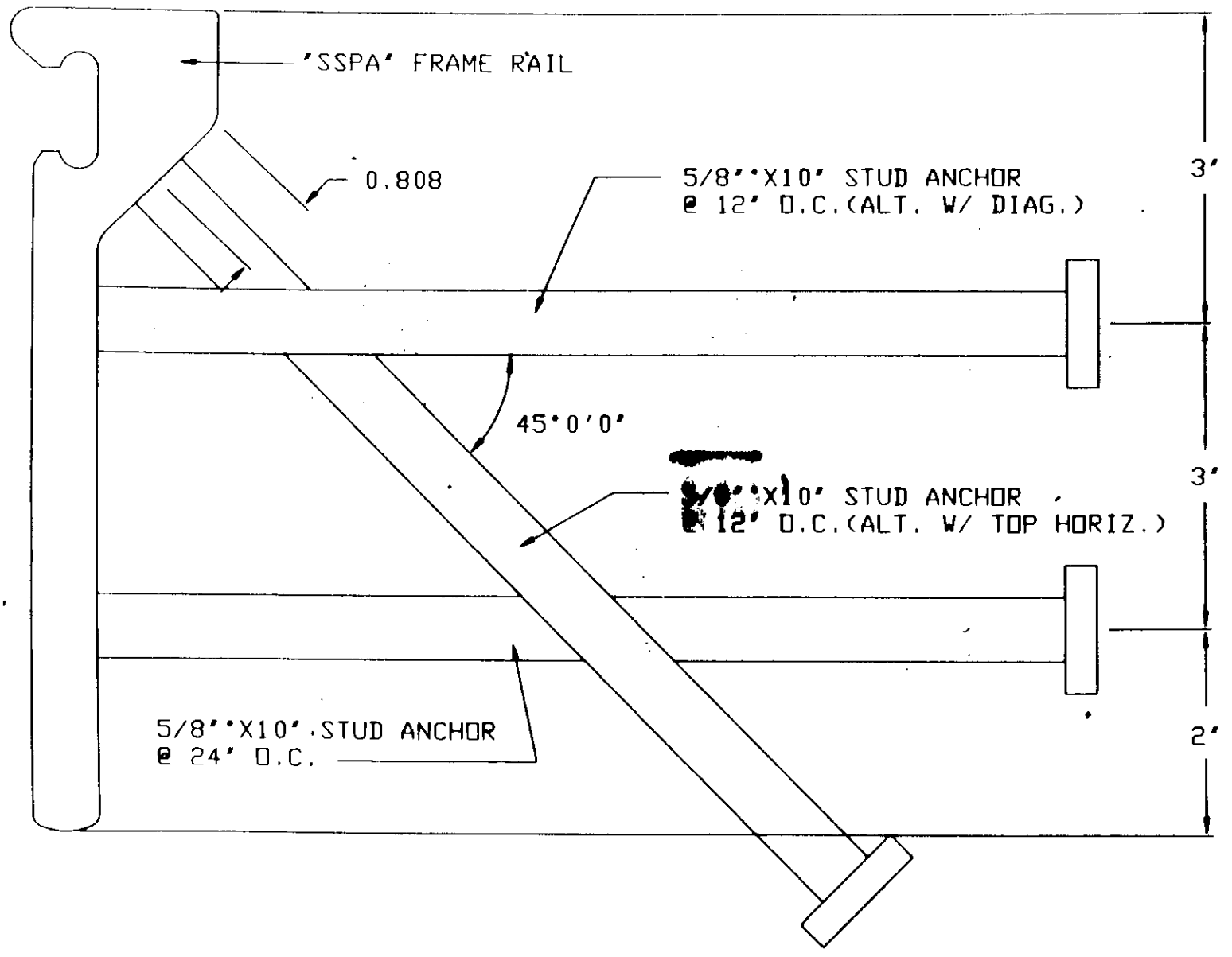

REVISION			
DATE	SYM	DESCRIPTION	BY

THE D.S. BROWN COMPANY, INC.
NORTH BALTIMORE, OHIO 45872-0158

PA STRIP SEAL W/ STUDS

[redacted] FULL [redacted]
[redacted] BBB [redacted] 11-06-88 [redacted]
[redacted] SSPA-03 [redacted]

PENNA. DEPT. OF TRANS.
APPROVED [redacted]
APR [illegible]
CHIEF BRIDGE ENGINEER
MGP

Product:

Disc Bearings
Standard Detail Drawings
PADOT DWG #97-601 BQAD

Approval Date:

September 3, 1998

Initiated By SOL:

431-98-28

Application/Use:

Disc Bearings manufactured by R.J. Watson, Inc, P.O. Box 85, East Amherst, NY 14051 (Tel. No. 716-741-2166) have been approved to be used as an “alternate” or “as-designed” Disc Bearing system.

Specifications:

None.

Standard Drawings:

Attached is a set of Standard Detail Drawings (PADOT #97-601 BQAD) showing typical Disc Bearing Details and designs dated July 27, 1998, for your reference.

Comment:

Designers may elect to use the Disc Bearing System on bridge design projects. All the necessary Disc Bearing details must be shown in the design plans.
When a High Load Multi-Rotational Bearing is required, designers must show the details of an approved bearing system (i.e., either Pot Bearings or Disc Bearings) on the design plans, and in addition must indicate that the use of approved alternate bearings is permitted.
The Department's specification section 107.03 of Publication 408 is applicable (on all projects) for use of these Disc Bearings system.
FHWA approval has been secured for use of Disc Bearing systems.

STANDARD No.: DBU-2

GENERAL NOTES :

1. MATERIAL AND WORKMANSHIP IS TO BE IN ACCORDANCE WITH PUB. 408.
2. ALL STEEL PLATES ARE TO CONFORM TO SECTION 1111.02(a) – PUB. 408 (EXCEPT AS NOTED), AND SHALL BE OF DOMESTIC ORIGIN.
3. ANCHOR BOLTS, NUTS, AND WASHERS SHALL CONFORM TO SECTION 1105.02(d) – PUB. 408. ANCHOR BOLTS, NUTS, AND WASHERS ARE TO BE HOT-DIP GALVANIZED IN ACCORDANCE WITH SECTION 1105.02(s) – PUB. 408.
4. THE POLYTRON ELEMENT IS TO BE IN ACCORDANCE WITH AASHTO 16th EDITION; DIVISION II; SECTION 18.3.3.7; TABLE 18.3.3; COMPOUND B; AND IS TO BE ROUGHED. ROTATION CAPACITY IS 0.02 RADIANS.
5. ALL WELDING TO BE PERFORMED IN ACCORDANCE WITH AWS – D1.5 BRIDGE WELDING CODE, AS WELL AS THE PENNSYLVANIA DEPARTMENT OF TRANSPORTATION STANDARDS AND SPECIFICATIONS.
6. ORIENTATION OF BEARING SOLE PLATE TO BE MARKED ON EACH INDIVIDUAL BEARING AS SHOWN ON THE SHOP DRAWINGS.
7. COMPLETED BEARINGS ARE TO BE INDIVIDUALLY STEEL BANDED FOR SHIPPING AND HANDLING.
8. BEARINGS ARE TO BE STORED IN A CLEAN, DRY, LEVEL, UPRIGHT POSITION.
9. AT NO TIME, MAY ANY BEARING BE DISASSEMBLED WITHOUT AUTHORIZATION FROM R. J. WATSON, INC.
10. ALL MILL SCALE TO BE REMOVED FROM BEARING PLATES VIA SANDBLASTING (SSPC–SP10).
11. ALL EXTERIOR STEEL SURFACES EXCEPT FOR TOP OF SOLE PLATE, AND BOTTOM OF MASONRY PLATE, ARE TO BE PAINTED IN ACCORDANCE WITH SECTION 1060.2(a) – PUB. 408.
12. ⊗ INDICATES HIGH SIDE OF BEVELED SOLE PLATE.
13. BEARINGS ARE DESIGNED WITH AN ALLOWABLE CONCRETE BEARING PRESSURE OF 1500 PSI.
14. PROVIDE CERTIFICATION IN ACCORDANCE WITH SECTION 106.03(b)3 – PUB. 408.
15. BEARINGS SHALL BE ADEQUATE FOR THE DESIGN LOADS AND MOVEMENTS SHOWN IN THE PLANS OR AS SPECIFIED.
16. USE APPLICABLE INFORMATION SHOWN ON THESE DRAWINGS TO DEVELOP SHOP DRAWINGS.

LIMITATIONS:

1. DESIGN SOLE PLATE IN ACCORDANCE WITH PADOT DESIGN MANUAL PART 4 (STRUCTURES) SECTION 14.4.1.2P CRITERIA.
2. DISC BEARINGS SHOULD NOT BE MIXED WITH OTHER TYPES OF BEARINGS HAVING DIFFERENT COMPRESSIVE AND ROTATIONAL CHARACTERISTICS.

TABLE OF DIMENSIONS

LN	VERTICAL DESIGN LOAD (kips)	HORIZONTAL DESIGN LOAD (kips)	MASONRY PLATE (in.) ▲					LBP (in.)		SHEAR PIN (in.)				UBP (in.)		SOLE PLATE (in.)				HEIGHT (in.)	POLYTRON (in.)	
			A	B	C	D	E	F	G	H	I	J	K	M	O	DD	EE	FF	GG	HH	KK	LL
01	100	10	16.00	9.50	12.00	---	1.00	6.50	0.75	2.00	0.50	1.63	1.13	6.50	0.75	11.00	11.00	PER DESIGN (BEVELED SOLE PLATE)	0.75	4.00	5.50	0.75
02	150	15	18.00	11.50	14.00	---	1.00	8.00	0.75	2.00	0.50	1.63	1.13	8.00	0.75	13.00	13.00		0.75	4.00	6.50	0.75
03	200	20	20.00	13.50	16.00	---	1.00	9.25	1.00	2.00	0.75	2.13	1.38	9.25	1.00	15.00	15.00		1.00	5.00	7.50	1.00
04	250	25	21.50	15.00	17.50	---	1.25	10.25	1.00	2.00	0.75	2.13	1.38	10.25	1.00	16.00	16.00		1.00	5.25	8.50	1.00
05	300	30	22.50	16.00	18.50	9.50	1.25	11.00	1.00	2.00	0.75	2.38	1.63	11.00	1.00	16.00	16.00		1.00	5.50	9.00	1.25
06	350	35	24.00	17.50	20.00	11.00	1.25	12.00	1.00	2.00	0.75	2.38	1.63	12.00	1.00	17.00	17.00		1.00	5.50	10.00	1.25
07	400	40	25.00	18.50	21.00	12.00	1.50	12.75	1.25	2.25	1.00	2.63	1.63	12.75	1.25	19.00	19.00		1.25	6.50	10.50	1.25
08	450	45	26.50	20.00	22.50	13.50	1.50	13.50	1.25	2.25	1.00	2.63	1.63	13.50	1.25	19.00	19.00		1.25	6.50	11.00	1.25
09	500	50	27.50	21.00	23.50	14.50	1.75	14.00	1.25	2.50	1.00	2.88	1.88	14.00	1.25	20.00	20.00		1.25	7.00	11.75	1.50
10	550	55	28.50	22.00	22.50	---	1.75	14.75	1.25	2.50	1.00	2.88	1.88	14.75	1.25	21.00	21.00		1.25	7.00	12.25	1.50
11	600	60	29.50	23.00	23.50	15.00	1.75	15.50	1.25	2.50	1.00	2.88	1.88	15.50	1.25	22.00	22.00		1.25	7.00	12.75	1.50
12	650	65	30.00	23.50	24.00	15.50	2.00	16.00	1.25	2.50	1.00	2.88	1.88	16.00	1.25	22.00	22.00		1.25	7.25	13.25	1.50
13	700	70	31.00	24.50	25.00	16.50	2.00	16.50	1.50	2.75	1.25	3.38	2.13	16.50	1.50	23.00	23.00		1.50	8.25	13.75	1.75
14	750	75	32.00	25.50	26.00	17.50	2.00	17.25	1.50	2.75	1.25	3.38	2.13	17.25	1.50	24.00	24.00		1.50	8.25	14.25	1.75
15	800	80	33.00	26.50	27.00	18.50	2.00	17.75	1.50	3.00	1.25	3.38	2.13	17.75	1.50	25.00	25.00		1.50	8.25	15.00	1.75
16	850	85	33.50	27.00	27.50	20.00	2.25	18.25	1.50	3.00	1.25	3.63	2.38	18.25	1.50	25.00	25.00		1.50	8.75	15.50	2.00
17	900	90	34.50	28.00	28.50	21.00	2.25	18.75	1.50	3.25	1.25	3.63	2.38	18.75	1.50	26.00	26.00		1.50	8.75	16.00	2.00
18	950	95	35.00	28.50	29.00	21.50	2.25	19.25	1.50	3.25	1.25	3.63	2.38	19.25	1.50	27.00	27.00		1.50	8.75	16.00	2.00
19	1000	100	36.00	29.50	30.00	22.50	2.50	19.75	1.50	3.25	1.25	3.63	2.38	19.75	1.50	27.00	27.00		1.50	9.00	16.50	2.00

* MASONRY PLATES SHOWN HAVE BEEN DESIGNED BASED ON A CONCRETE PEDESTAL ▲ COMPRESSIVE STRENGTH OF 5000 PSI. REVISED MASONRY PLATE SIZES SHALL BE DESIGNED IN ACCORDANCE WITH PADOT DESIGN MANUAL PART 4 (STRUCTURES) CRITERIA.

* BEARINGS ARE DESIGNED WITH A MINIMUM SAFETY FACTOR OF 5.0 IN THE VERTICAL LOAD DIRECTION AND 3.0 IN THE HORIZONTAL LOAD DIRECTION.

BILL OF MATERIALS

LN	MARK	QTY UNIT	DESCRIPTION	MATERIAL
01	PA5	1	MASONRY PLATE	ASTM A36
02	PB5	1	SOLE PLATE	ASTM A36
03	PC5	1	UPPER BRG. PLATE	ASTM A36
04	PD5	1	LOWER BRG. PLATE	ASTM A36
05	ba5	1	SHEAR PIN	ASTM A193 GR. B7
06	ma5	1	POLYTRON ELEMENT	SEE NOTE 5
07	mb6	1	BEARING PAD	POLYCHLOROPRENE

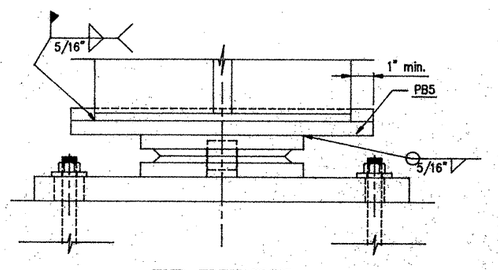

END ELEVATION
(LOOKING AWAY FROM ABUTMENT)

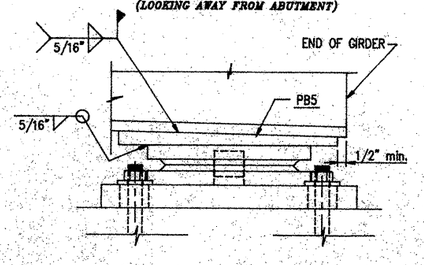

SIDE ELEVATION

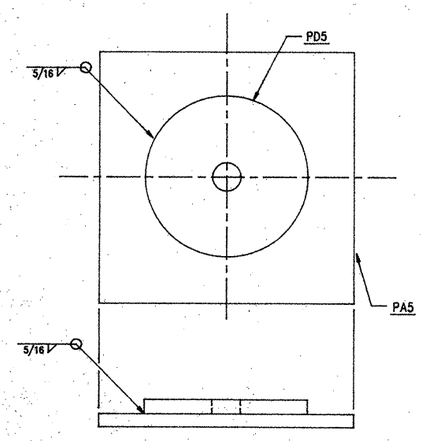

DETAIL "C"
LOWER BEARING PLATE WELD DETAIL

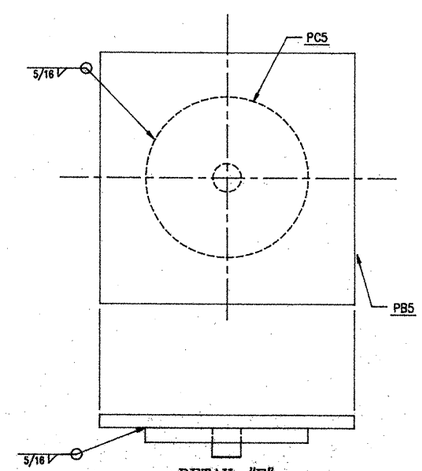

DETAIL "F"
UPPER BEARING PLATE WELD DETAIL

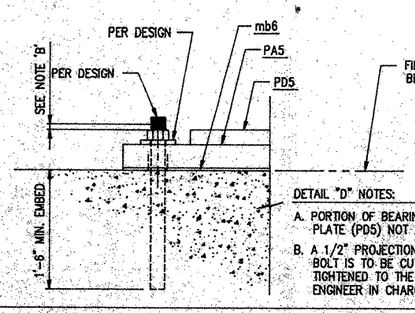

DETAIL "D"
ANCHOR BOLT DETAIL

DETAIL "D" NOTES:

A. PORTION OF BEARING ABOVE LOWER BEARING PLATE (PD5) NOT SHOWN IN DETAIL "D."

B. A 1/2" PROJECTION IS TO BE LEFT. ANCHOR BOLT IS TO BE CUT AFTER THE NUT IS TIGHTENED TO THE SATISFACTION OF THE ENGINEER IN CHARGE.

TOLERANCING:
PROVIDE TOLERANCE IN ACCORDANCE WITH PUB 408, SECTION 1111.03.

BEARING HEIGHT +/- 1/8"

REVISIONS

FIXED DISC BEARING

PROJECT INFORMATION:

CONSULTANT:

CONTRACTOR:

PADOT DWG. # 97-601-BQAD

R. J. WATSON, INC.
P. O. BOX : 95
EAST AMHERST, NEW YORK 14051

PRODUCTION COORDINATOR: DAVID G. STAFFORD
R. J. WATSON, INC.

INSPECTION, SAMPLING, & TESTING COORDINATOR:
JAY C. CONKLIN
R. J. WATSON, INC.

FABRICATOR: NATIONAL BRIDGE CO. INC.
1060 MILITARY ROAD
BUFFALO, NEW YORK 14217

OWNER: COMMONWEALTH OF PENNSYLVANIA
DEPARTMENT OF TRANSPORTATION
BUREAU OF DESIGN

STANDARD DISC BEARING DETAILS

DTL'D By:	MA	DATE: 7-FEB.-97	JOB REFERENCE: 97010
CHK'D By:	JC	DATE: 4-JUN.-98	DRAWING No: 7010-6
APP'D By:		DATE:	SHEET NUMBER 6 of 6.

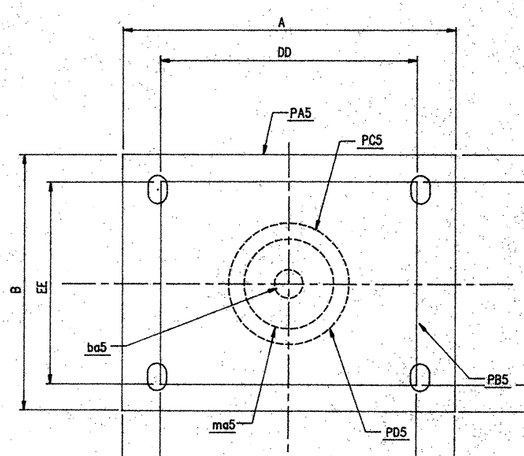

PLAN VIEW

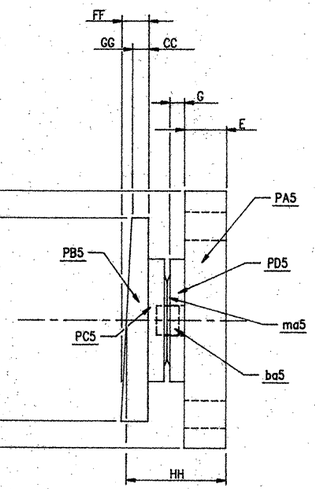

SIDE ELEVATION

NOTE:
FOR WELDING PARAMETERS, SEE DETAILS "B", & "F" ON SHEET NO. 6.

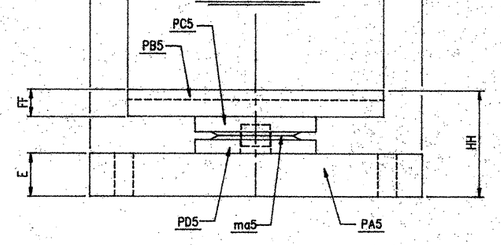

END ELEVATION

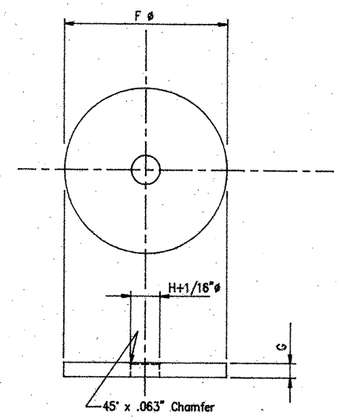

Lower Bearing Plate – PD5

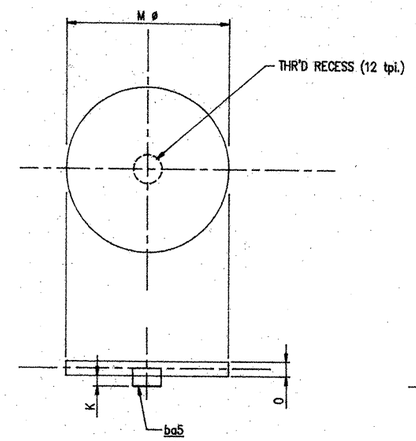

Upper Bearing Plate – PC5

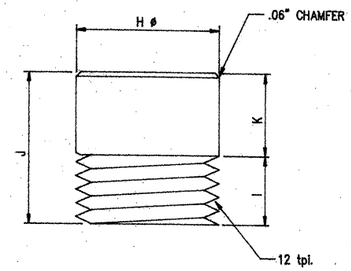

Shear Pin – ba5

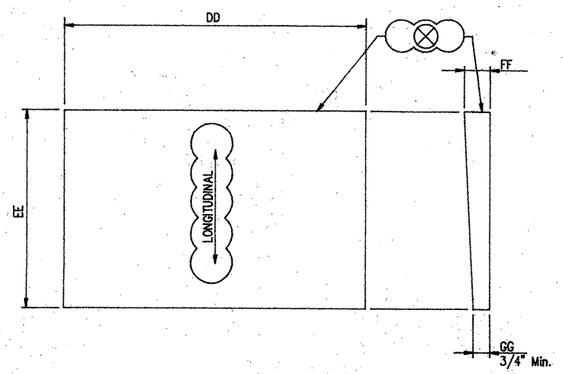

Sole Plate – PB5

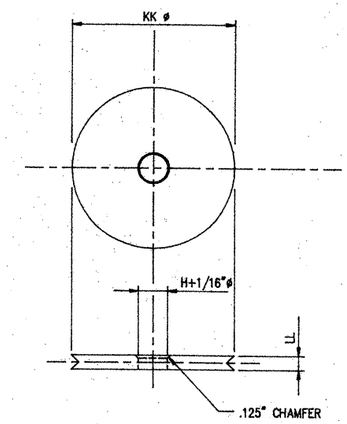

Polytron Disc – ma5

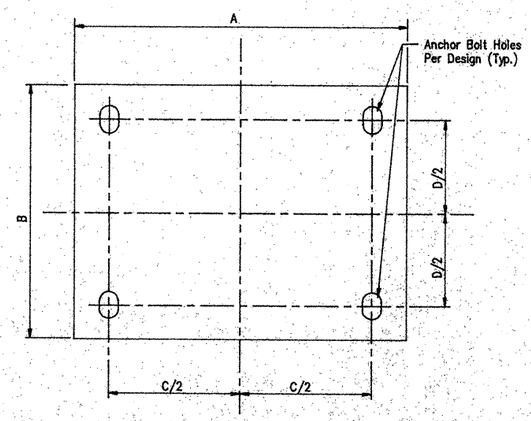

Masonry Plate – PA5

CLOUDED NOTES ARE TO BE PERMANENTLY MARKED IN POSITIONS SHOWN ON DETAILS.

The details shown on these drawings reflect the design assumptions inherent in the calculations that form the basis of these details.

PADOT DWG. # 97-601-BQAD

TOLERANCING:
PROVIDE TOLERANCE IN ACCORDANCE WITH PUB. 408, SECTION 1111.03.
BEARING HEIGHT +/- 1/8"

REVISIONS

FIXED DISC BEARING

PROJECT INFORMATION:

CONSULTANT:

CONTRACTOR:

R. J. WATSON, INC.
P. O. BOX : 86
EAST AMHERST, NEW YORK 14051

PRODUCTION COORDINATOR: DAVID G. STAFFORD
R. J. WATSON, INC.

INSPECTION, SAMPLING, & TESTING COORDINATOR:
JAY C. CONKLIN
R. J. WATSON, INC.

FABRICATOR: NATIONAL BRIDGE CO. INC.
1060 MILITARY ROAD
BUFFALO, NEW YORK 14217

OWNER: COMMONWEALTH OF PENNSYLVANIA
DEPARTMENT OF TRANSPORTATION
BUREAU OF DESIGN

STANDARD DISC BEARING DETAILS

DTL'D By:	MA	DATE: 11-FEB.-97	JOB REFERENCE: 97010
CHK'D By:	JC	DATE: 4-JUN.-98	DRAWING No: 7010-5
APP'D By:		DATE:	SHEET NUMBER 5 of 6.

STANDARD No.: DBU-2

GENERAL NOTES :

1. MATERIAL AND WORKMANSHIP IS TO BE IN ACCORDANCE WITH PUB. 408.
2. ALL STEEL PLATES ARE TO CONFORM TO SECTION 1111.02(a) – PUB. 408 (EXCEPT AS NOTED), AND SHALL BE OF DOMESTIC ORIGIN.
3. ANCHOR BOLTS, NUTS, AND WASHERS SHALL CONFORM TO SECTION 1105.02(d) – PUB. 408. ANCHOR BOLTS, NUTS, AND WASHERS ARE TO BE HOT-DIP GALVANIZED IN ACCORDANCE WITH SECTION 1105.02(s) – PUB. 408.
4. THE POLYTRON ELEMENT IS TO BE IN ACCORDANCE WITH AASHTO 16th EDITION; DIVISION II; SECTION 18.3.3.7; TABLE 18.3.3; COMPOUND B; AND IS TO BE ROUGHED. ROTATION CAPACITY IS 0.02 RADIANS.
5. PTFE IS TO BE VIRGIN, AND ETCHED ON ONE SIDE FOR BONDING INTO MACHINED RECESS PER AASHTO 16th EDITION; DIVISION II; SECTION 18.3.3.6. THE MAXIMUM COEFFICIENT OF FRICTION SHALL NOT EXCEED 4% @ 3500 psi., STATIC OR DYNAMIC, PER AASHTO 16th EDITION; DIVISION I; SECTION 15.2.6.
6. THE STAINLESS STEEL SHEET IS TO CONFORM TO ASTM-A240, TYPE 304, SHALL BE 12 GAUGE (.1046" THICKNESS), IT IS TO RECEIVE A No.8 BRIGHT MIRROR FINISH PER AASHTO 16th EDITION; DIVISION II; SECTION 18.3.3.5.
7. ALL WELDING TO BE PERFORMED IN ACCORDANCE WITH AWS – D1.5 BRIDGE WELDING CODE, AS WELL AS THE PENNSYLVANIA DEPARTMENT OF TRANSPORTATION STANDARDS AND SPECIFICATIONS.
8. ORIENTATION OF BEARING SOLE PLATE TO BE MARKED ON EACH INDIVIDUAL BEARING AS SHOWN ON THE SHOP DRAWINGS.
9. PTFE AND STAINLESS STEEL SURFACES ARE TO BE PROTECTED FROM DAMAGE AS WELL AS AIRBORNE DEBRIS AND CONTAMINANTS AT ALL TIMES PRIOR TO FINAL ASSEMBLY. THESE SURFACES ARE TO BE INSPECTED FOR SUCH DAMAGE AND DEBRIS BEFORE FINAL ASSEMBLY.
10. COMPLETED BEARINGS ARE TO BE INDIVIDUALLY STEEL BANDED FOR SHIPPING AND HANDLING.
11. BEARINGS ARE TO BE STORED IN A CLEAN, DRY, LEVEL, UPRIGHT POSITION.
12. AT NO TIME, MAY ANY BEARING BE DISASSEMBLED WITHOUT AUTHORIZATION FROM R. J. WATSON, INC.
13. ALL MILL SCALE TO BE REMOVED FROM BEARING PLATES VIA SANDBLASTING (SSPC-SP10).
14. ALL EXTERIOR STEEL SURFACES EXCEPT FOR TOP OF SOLE PLATE, AND BOTTOM OF MASONRY PLATE, ARE TO BE PAINTED IN ACCORDANCE WITH SECTION 1060.2(a) – PUB. 408.
15. ⊗ INDICATES HIGH SIDE OF BEVELED SOLE PLATE.
16. BEARINGS ARE DESIGNED WITH AN ALLOWABLE CONCRETE BEARING PRESSURE OF 1500 PSI.
17. PROVIDE CERTIFICATION IN ACCORDANCE WITH SECTION 106.03(b)3 – PUB. 408.
18. BEARINGS SHALL BE ADEQUATE FOR THE DESIGN LOADS AND MOVEMENTS SHOWN IN THE PLANS OR AS SPECIFIED.
19. USE APPLICABLE INFORMATION SHOWN ON THESE DRAWINGS TO DEVELOP SHOP DRAWINGS.

LIMITATIONS:

1. DESIGN SOLE PLATE IN ACCORDANCE WITH PADOT DESIGN MANUAL PART 4 (STRUCTURES) SECTION 14.4.1.2P CRITERIA.
2. DISC BEARINGS SHOULD NOT BE MIXED WITH OTHER TYPES OF BEARINGS HAVING DIFFERENT COMPRESSIVE AND ROTATIONAL CHARACTERISTICS.

TABLE OF DIMENSIONS

LN	VERTICAL DESIGN LOAD (kips)	HORIZONTAL DESIGN LOAD (kips)	MASONRY PLATE (in.)▲					LBP (in.)		SHEAR PIN (in.)				UBP (in.)		PTFE (in.)		STAINLESS (in.)		SLIDE PLATE (in.)			SOLE PLATE (in.)			HEIGHT (in.)		POLYTRON (in.)	
			A	B	C	D	E	F	G	H	I	J	K	M	O	P	Q	T	U	AA	BB	CC	DD	EE	FF	GG	HH	KK	LL
01	100	10	16.00	9.50	12.00	---	1.00	6.50	0.75	2.00	0.50	1.63	1.13	6.50	0.75	6.13	0.188	6.50	9.25	10.00	10.00	0.75	11.00	11.00	PER DESIGN (BEVELED SOLE PLATE)	0.75	4.95	5.50	0.75
02	150	15	18.00	11.50	14.00	---	1.00	8.00	0.75	2.00	0.50	1.63	1.13	8.00	0.75	7.50	0.188	8.00	11.00	12.00	12.00	0.75	13.00	13.00		0.75	4.95	6.50	0.75
03	200	20	20.00	13.50	16.00	---	1.00	9.25	1.00	2.00	0.75	2.13	1.38	9.25	1.00	8.75	0.188	9.25	12.00	14.00	14.00	1.00	15.00	15.00		1.00	6.20	7.50	1.00
04	250	25	21.50	15.00	17.50	---	1.25	10.25	1.00	2.00	0.75	2.13	1.38	10.25	1.00	9.75	0.188	10.25	13.00	15.00	15.00	1.00	16.00	16.00		1.00	6.45	8.50	1.00
05	300	30	22.50	16.00	18.50	9.50	1.25	11.00	1.00	2.00	0.75	2.38	1.63	11.00	1.00	10.50	0.188	11.00	14.00	15.00	15.00	1.00	16.00	16.00		1.00	6.70	9.00	1.25
06	350	35	24.00	17.50	20.00	11.00	1.25	12.00	1.00	2.00	0.75	2.38	1.63	12.00	1.00	11.50	0.188	12.00	15.00	16.00	16.00	1.00	17.00	17.00		1.00	6.70	10.00	1.25
07	400	40	25.00	18.50	21.00	12.00	1.50	12.75	1.25	2.25	1.00	2.63	1.63	12.75	1.25	12.25	0.188	12.75	16.00	18.00	18.00	1.25	19.00	19.00		1.25	7.95	10.50	1.25
08	450	45	26.50	20.00	22.50	13.50	1.50	13.50	1.25	2.25	1.00	2.63	1.63	13.50	1.25	13.00	0.188	13.50	16.50	18.00	18.00	1.25	19.00	19.00		1.25	7.95	11.00	1.25
09	500	50	27.50	21.00	23.50	14.50	1.75	14.00	1.25	2.50	1.00	2.88	1.88	14.00	1.25	13.50	0.188	14.00	17.00	19.00	19.00	1.25	20.00	20.00		1.25	8.45	11.75	1.50
10	550	55	28.50	22.00	22.50	---	1.75	14.75	1.25	2.50	1.00	2.88	1.88	14.75	1.25	14.25	0.188	14.75	17.50	20.00	20.00	1.25	21.00	21.00		1.25	8.45	12.25	1.50
11	600	60	29.50	23.00	23.50	15.00	1.75	15.50	1.25	2.50	1.00	2.88	1.88	15.50	1.25	15.00	0.188	15.50	18.50	21.00	21.00	1.25	22.00	22.00		1.25	8.45	12.75	1.50
12	650	65	30.00	23.50	24.00	15.50	2.00	16.00	1.25	2.50	1.00	2.88	1.88	16.00	1.25	15.50	0.188	16.00	19.00	21.00	21.00	1.25	22.00	22.00		1.25	8.70	13.25	1.50
13	700	70	31.00	24.50	25.00	16.50	2.00	16.50	1.50	2.75	1.25	3.38	2.13	16.50	1.50	16.00	0.188	16.50	19.50	22.00	22.00	1.50	23.00	23.00		1.50	9.95	13.75	1.75
14	750	75	32.00	25.50	26.00	17.50	2.00	17.25	1.50	2.75	1.25	3.38	2.13	17.25	1.50	16.75	0.188	17.25	20.00	23.00	23.00	1.50	24.00	24.00		1.50	9.95	14.25	1.75
15	800	80	33.00	26.50	27.00	18.50	2.00	17.75	1.50	3.00	1.25	3.38	2.13	17.75	1.50	17.25	0.188	17.75	21.00	24.00	24.00	1.50	25.00	25.00		1.50	9.95	15.00	1.75
16	850	85	33.50	27.00	27.50	20.00	2.25	18.25	1.50	3.00	1.25	3.63	2.38	18.25	1.50	17.75	0.188	18.25	21.50	24.00	24.00	1.50	25.00	25.00		1.50	10.45	15.50	2.00
17	900	90	34.50	28.00	28.50	21.00	2.25	18.75	1.50	3.25	1.25	3.63	2.38	18.75	1.50	18.25	0.188	18.75	22.00	25.00	25.00	1.50	26.00	26.00		1.50	10.45	16.00	2.00
18	950	95	35.00	28.50	29.00	21.50	2.25	19.25	1.50	3.25	1.25	3.63	2.38	19.25	1.50	18.75	0.188	19.25	22.00	26.00	26.00	1.50	27.00	27.00		1.50	10.45	16.00	2.00
19	1000	100	36.00	29.50	30.00	22.50	2.50	19.75	1.50	3.25	1.25	3.63	2.38	19.75	1.50	19.25	0.188	19.75	22.00	26.00	26.00	1.50	27.00	27.00		1.50	10.70	16.50	2.00

* VERTICAL LOADS LISTED IN THE BEARING SCHEDULE ARE ACTUAL SERVICE LOADS. THE PERCENTAGE INCREASE OF THE ALLOWABLE UNIT STRESS (AS PER COLUMN 14 OF AASHTO TABLE 3.22.1A AND DIVISION I-A SEISMIC DESIGN) HAS NOT BEEN FACTORED INTO THESE VALUES.
* ALLOWABLE COEFFICIENT OF FRICTION IS BASED ON MAXIMUM BEARING PRESSURE (PTFE) OF 3500 psi.
* FRICTIONAL RESISTANCE OF BEARING SLIDE SURFACE HAS NOT BEEN INCLUDED IN SPECIFIED HORIZONTAL LOADS.
* FIXED AND EXPANSION BEARINGS HAVE BEEN DESIGNED TO PROVIDE A MAXIMUM HORIZONTAL LOAD CAPACITY LESS THAN OR EQUAL TO 10% OF VERTICAL LOAD CAPACITY.
* EXPANSION BEARINGS HAVE BEEN DESIGNED FOR A MAXIMUM LONGITUDINAL MOVEMENT OF 1-INCH PLUS CONSTRUCTION TOLERANCES IN ACCORDANCE WITH AASHTO 16th EDITION; DIVISION I; SECTION 20.2.1.3(c). SEE GENERAL NOTE 19.

* MASONRY PLATES SHOWN HAVE BEEN DESIGNED BASED ON A CONCRETE PEDESTAL
▲ COMPRESSIVE STRENGTH OF 5000 PSI. REVISED MASONRY PLATE SIZES SHALL BE DESIGNED IN ACCORDANCE WITH PADOT DESIGN MANUAL PART 4 (STRUCTURES) CRITERIA.
* BEARINGS ARE DESIGNED WITH A MINIMUM SAFETY FACTOR OF 5.0 IN THE VERTICAL LOAD DIRECTION AND 3.0 IN THE HORIZONTAL LOAD DIRECTION.

BILL OF MATERIALS

LN	MARK	QTY UNIT	DESCRIPTION	MATERIAL
01	PA3	1	MASONRY PLATE	ASTM A36
02	PB3	1	SOLE PLATE	ASTM A36
03	PC3	1	UPPER BRG. PLATE	ASTM A36
04	PD3	1	LOWER BRG. PLATE	ASTM A36
05	PF3	1	SLIDE PLATE	ASTM A36
06	ssa4	1	STAINLESS STEEL	A240 – TYPE 304 12 GA 20 Micro-Inch RMS
07	ba3	1	SHEAR PIN	ASTM A193 GR. B7
08	ma3	1	POLYTRON ELEMENT	SEE NOTE 5
09	mb3	1	PTFE	SEE NOTE 6
10	mb4	1	BEARING PAD	POLYCHLOROPRENE

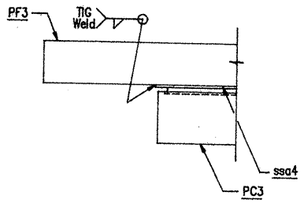

DETAIL "E"
STAINLESS WELD DETAIL

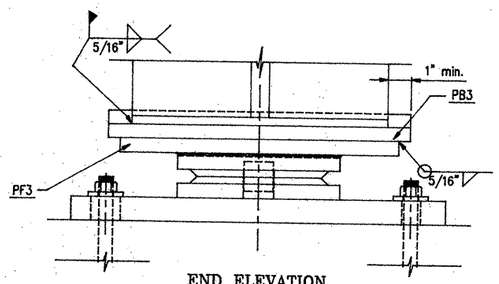

END ELEVATION
(LOOKING AWAY FROM ABUTMENT)

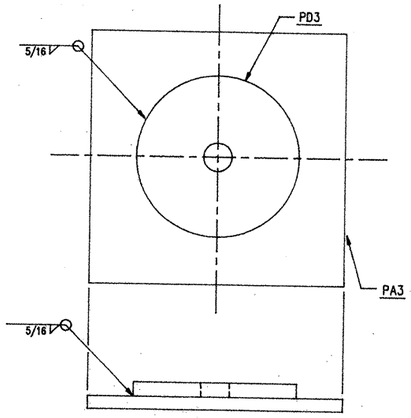

DETAIL "C"
LOWER BEARING PLATE WELD DETAIL

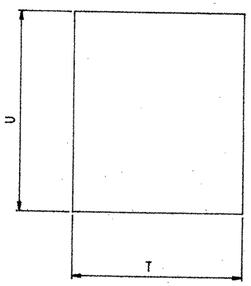

Mirror Stainless Plates – ssa4

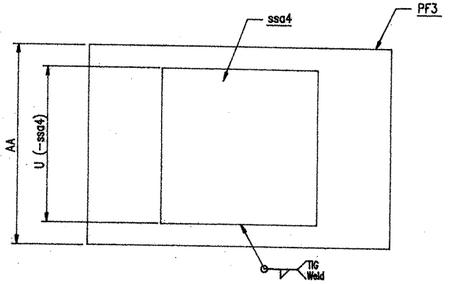

DETAIL "B"
STAINLESS PLACEMENT DETAIL

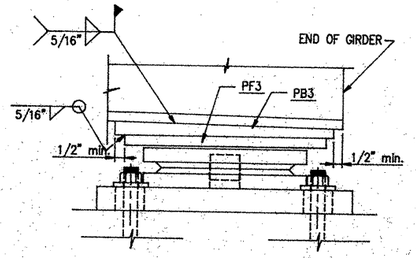

SIDE ELEVATION

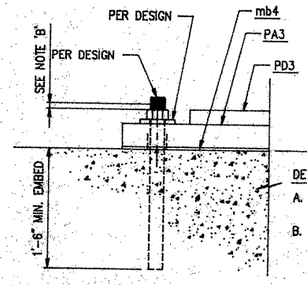

FINISHED CONCRETE BEARING SURFACE.

DETAIL "D"
ANCHOR BOLT DETAIL

DETAIL "D" NOTES:

A. PORTION OF BEARING ABOVE LOWER BEARING PLATE (PD3) NOT SHOWN IN DETAIL "D."

B. A 1/2" PROJECTION IS TO BE LEFT. ANCHOR BOLT IS TO BE CUT AFTER THE NUT IS TIGHTENED TO THE SATISFACTION OF THE ENGINEER IN CHARGE.

PADOT DWG. # 97-601-BQAD

TOLERANCING:
PROVIDE TOLERANCE IN ACCORDANCE WITH PUB 408, SECTION 1111.03.

BEARING HEIGHT +/- 1/8"

REVISIONS

NON-GUIDED EXP. DISC BEARING

PROJECT INFORMATION:

CONSULTANT:

CONTRACTOR:

R. J. WATSON, INC.
P. O. BOX : 86
EAST AMHERST, NEW YORK 14051

PRODUCTION COORDINATOR: DAVID G. STAFFORD
R. J. WATSON, INC.

INSPECTION, SAMPLING, & TESTING COORDINATOR:
JAY C. CONKLIN
R. J. WATSON, INC.

FABRICATOR: NATIONAL BRIDGE CO. INC.
1060 MILITARY ROAD
BUFFALO, NEW YORK 14217

OWNER: COMMONWEALTH OF PENNSYLVANIA
DEPARTMENT OF TRANSPORTATION
BUREAU OF DESIGN

STANDARD DISC BEARING DETAILS

DTL'D By: MA	DATE: 7-FEB.-97	JOB REFERENCE: 97010	
CHK'D By: JC	DATE: 4-JUN.-98	DRAWING No: 7010-4	
APP'D By:	DATE:	SHEET NUMBER 4 of 6.	

STANDARD No.: QBU-1

NOTE:
FOR CLARITY PTFE and STAINLESS STEEL NOT SHOWN ON PLAN & SIDE VIEWS.

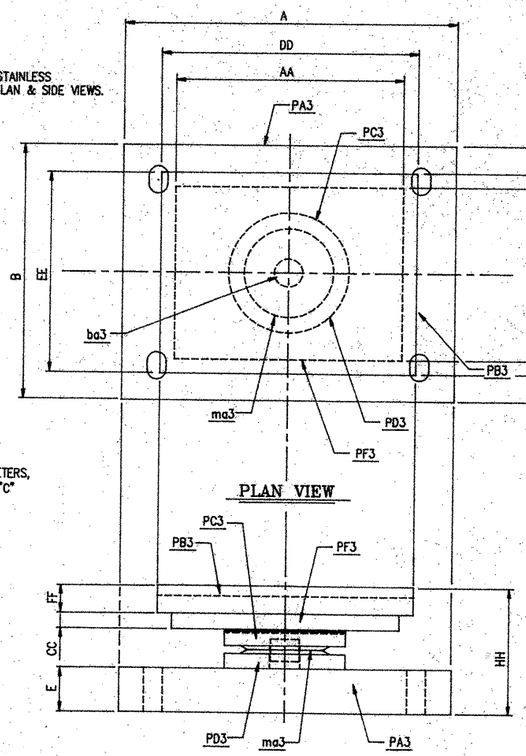

PLAN VIEW

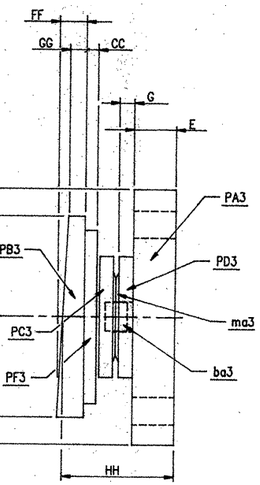

SIDE ELEVATION

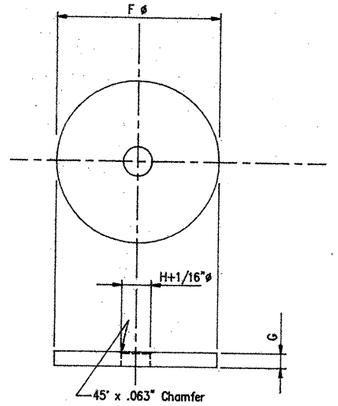

Lower Bearing Plate – PD3

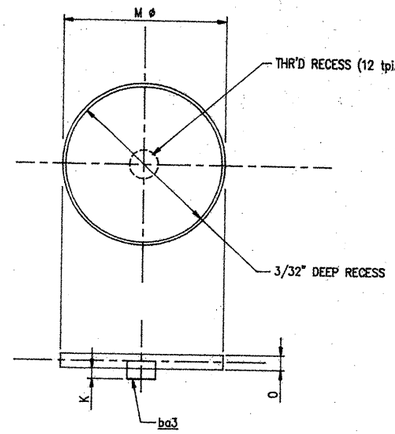

Upper Bearing Plate – PC3

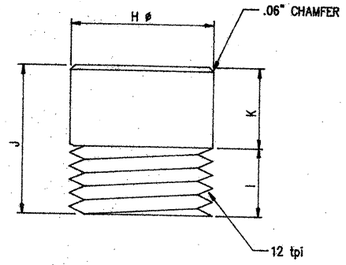

Shear Pin – ba3

NOTE:
FOR WELDING PARAMETERS, SEE DETAILS "B", & "C" ON SHEET NO. 4.

END ELEVATION

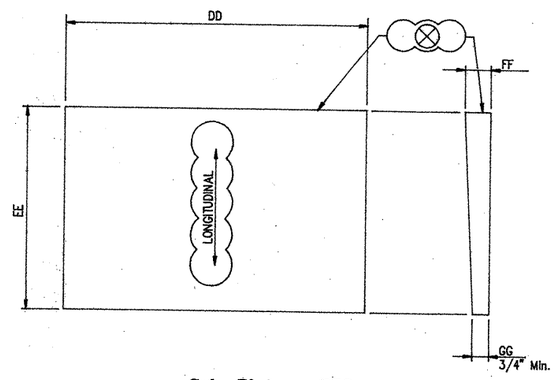

Sole Plate – PB3

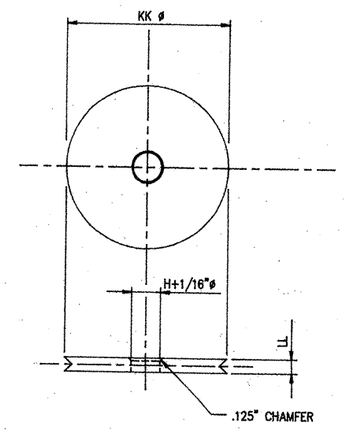

Polytron Disc – ma3

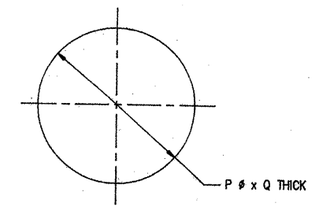

PTFE DISC – mb3

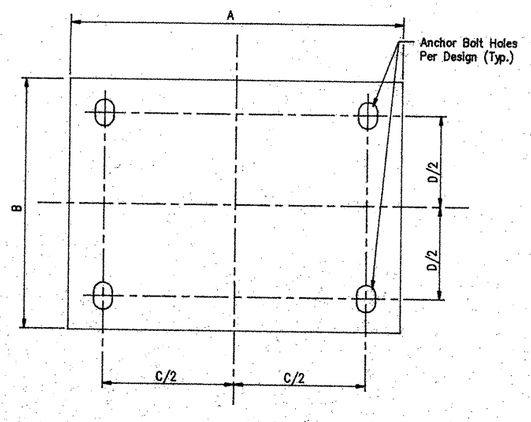

Masonry Plate – PA3

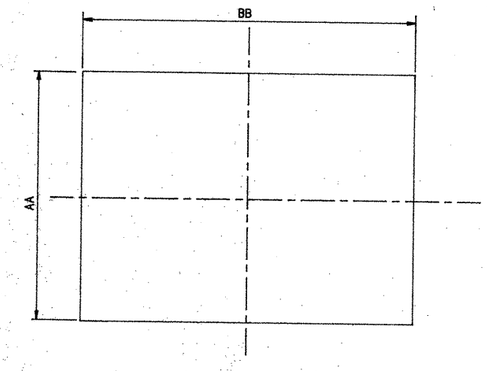

Slide Plate – PF3

CLOUDED NOTES ARE TO BE PERMANENTLY MARKED IN POSITIONS SHOWN ON DETAILS.

PADOT DWG. # 97-601-BQAD

The details shown on these drawings reflect the design assumptions inherent in the calculations that form the basis of these details.

TOLERANCING:
PROVIDE TOLERANCE IN ACCORDANCE WITH PUB.408, SECTION 1111.03.

BEARING HEIGHT +/- 1/8"

REVISIONS

NON-GUIDED EXP. DISC BEARING

PROJECT INFORMATION:

CONSULTANT:

CONTRACTOR:

R. J. WATSON, INC.
P. O. BOX : 85
EAST AMHERST, NEW YORK 14051

PRODUCTION COORDINATOR: DAVID G. STAFFORD
R. J. WATSON, INC.

INSPECTION, SAMPLING, & TESTING COORDINATOR: JAY C. CONKLIN
R. J. WATSON, INC.

FABRICATOR: NATIONAL BRIDGE CO. INC.
1060 MILITARY ROAD
BUFFALO, NEW YORK 14217

OWNER: COMMONWEALTH OF PENNSYLVANIA
DEPARTMENT OF TRANSPORTATION
BUREAU OF DESIGN

STANDARD DISC BEARING DETAILS

DTL'D By: MA	DATE: 11-FEB.-97	JOB REFERENCE: 97010
CHK'D By: JC	DATE: 4-JUN.-98	DRAWING No: 7010-3
APP'D By:	DATE:	SHEET NUMBER 3 of 6.

STANDARD No.: DBU-2

GENERAL NOTES :

1. MATERIAL AND WORKMANSHIP IS TO BE IN ACCORDANCE WITH PUB. 408.
2. ALL STEEL PLATES ARE TO CONFORM TO SECTION 1111.02(a) – PUB. 408 (EXCEPT AS NOTED), AND SHALL BE OF DOMESTIC ORIGIN.
3. ANCHOR BOLTS, NUTS, AND WASHERS SHALL CONFORM TO SECTION 1105.02(d) – PUB. 408. ANCHOR BOLTS, NUTS, AND WASHERS ARE TO BE HOT-DIP GALVANIZED IN ACCORDANCE WITH SECTION 1105.02(s) – PUB. 408.
4. THE POLYTRON ELEMENT IS TO BE IN ACCORDANCE WITH AASHTO 16th EDITION; DIVISION II; SECTION 18.3.3.7; TABLE 18.3.3; COMPOUND B; AND IS TO BE ROUGHED. ROTATION CAPACITY IS 0.02 RADIANS.
5. PTFE IS TO BE VIRGIN, AND ETCHED ON ONE SIDE FOR BONDING INTO MACHINED RECESS PER AASHTO 16th EDITION; DIVISION II; SECTION 18.3.3.6. THE MAXIMUM COEFFICIENT OF FRICTION SHALL NOT EXCEED 4% @ 3500 psi., STATIC OR DYNAMIC, PER AASHTO 16th EDITION; DIVISION I; SECTION 15.2.6.
6. SIDE PTFE IS TO BE 15% GLASS FILLED, AND ETCHED ON ONE SIDE FOR BONDING ONTO THE SIDE OF THE BEARING BLOCK.
7. THE STAINLESS STEEL SHEET IS TO CONFORM TO ASTM-A240, TYPE 304, SHALL BE 12 GAUGE (.1046" THICKNESS), IT IS TO RECEIVE A No.8 BRIGHT MIRROR FINISH PER AASHTO 16th EDITION; DIVISION II; SECTION 18.3.3.5.
8. ALL WELDING TO BE PERFORMED IN ACCORDANCE WITH AWS – D1.5 BRIDGE WELDING CODE, AS WELL AS THE PENNSYLVANIA DEPARTMENT OF TRANSPORTATION STANDARDS AND SPECIFICATIONS.
9. ORIENTATION OF BEARING SOLE PLATE TO BE MARKED ON EACH INDIVIDUAL BEARING AS SHOWN ON THE SHOP DRAWINGS.
10. PTFE AND STAINLESS STEEL SURFACES ARE TO BE PROTECTED FROM DAMAGE AS WELL AS AIRBORNE DEBRIS AND CONTAMINANTS AT ALL TIMES PRIOR TO FINAL ASSEMBLY. THESE SURFACES ARE TO BE INSPECTED FOR SUCH DAMAGE AND DEBRIS BEFORE FINAL ASSEMBLY.
11. COMPLETED BEARINGS ARE TO BE INDIVIDUALLY STEEL BANDED FOR SHIPPING AND HANDLING.
12. BEARINGS ARE TO BE STORED IN A CLEAN, DRY, LEVEL, UPRIGHT POSITION.
13. AT NO TIME, MAY ANY BEARING BE DISASSEMBLED WITHOUT AUTHORIZATION FROM R. J. WATSON, INC.
14. ALL MILL SCALE TO BE REMOVED FROM BEARING PLATES VIA SANDBLASTING (SSPC-SP10).
15. ALL EXTERIOR STEEL SURFACES EXCEPT FOR TOP OF SOLE PLATE, AND BOTTOM OF MASONRY PLATE, ARE TO BE PAINTED IN ACCORDANCE WITH SECTION 1060.2(a) – PUB. 408.
16. ⊗ INDICATES HIGH SIDE OF BEVELED SOLE PLATE.
17. BEARINGS ARE DESIGNED WITH AN ALLOWABLE CONCRETE BEARING PRESSURE OF 1500 PSI.
18. PROVIDE CERTIFICATION IN ACCORDANCE WITH SECTION 106.03(b)3 – PUB. 408.
19. BEARINGS SHALL BE ADEQUATE FOR THE DESIGN LOADS AND MOVEMENTS SHOWN IN THE PLANS OR AS SPECIFIED.
20. USE APPLICABLE INFORMATION SHOWN ON THESE DRAWINGS TO DEVELOP SHOP DRAWINGS.

LIMITATIONS:

1. DESIGN SOLE PLATE IN ACCORDANCE WITH PADOT DESIGN MANUAL PART 4 (STRUCTURES) SECTION 14.4.1.2P CRITERIA.
2. DISC BEARINGS SHOULD NOT BE MIXED WITH OTHER TYPES OF BEARINGS HAVING DIFFERENT COMPRESSIVE AND ROTATIONAL CHARACTERISTICS.

* MASONRY PLATES SHOWN HAVE BEEN DESIGNED BASED ON A CONCRETE PEDESTAL
▲ COMPRESSIVE STRENGTH OF 5000 PSI. REVISED MASONRY PLATE SIZES SHALL BE DESIGNED IN ACCORDANCE WITH PADOT DESIGN MANUAL PART 4 (STRUCTURES) CRITERIA.

* BEARINGS ARE DESIGNED WITH A MINIMUM SAFETY FACTOR OF 5.0 IN THE VERTICAL LOAD DIRECTION AND 3.0 IN THE HORIZONTAL LOAD DIRECTION.

TABLE OF DIMENSIONS

LN	VERTICAL DESIGN LOAD (kips)	HORIZONTAL DESIGN LOAD (kips)	MASONRY PLATE (in.) ▲ A	B	C	D	E	LBP (in.) F	G	SHEAR PIN (in.) H	I	J	K	UBP (in.) L	M	N	O	PTFE (in.) P	Q	SPTFE (in.) R	S	STAINLESS (in.) T	U	V	GUIDE BAR (in.) W	X	Y	SLIDE PLATE (in.) Z	AA	BB	CC	SOLE PLATE (in.) DD	EE	FF	GG	HEIGHT (in.) HH	POLYTRON (in.) KK	LL
01	100	10	16.00	9.50	12.00	---	1.00	6.50	0.75	2.00	0.50	1.63	1.13	6.50	6.50	1.00	0.75	6.13	0.188	4.00	0.75	6.50	9.25	1.13	7.00	0.75	1.25	7.22	10.00	10.00	0.75	11.00	11.00	PER DESIGN (BEVELED SOLE PLATE)	0.75	4.95	5.50	0.75
02	150	15	18.00	11.50	14.00	---	1.00	8.00	0.75	2.00	0.50	1.63	1.13	8.00	8.00	1.00	0.75	7.50	0.188	4.00	0.75	8.00	11.00	1.13	7.00	0.75	1.25	8.71	12.00	12.00	0.75	13.00	13.00		0.75	4.95	6.50	0.75
03	200	20	20.00	13.50	16.00	---	1.00	9.25	1.00	2.00	0.75	2.13	1.38	9.25	9.25	1.50	1.00	8.75	0.188	5.00	0.75	9.25	12.00	1.13	8.00	1.00	1.25	9.96	14.00	14.00	1.00	15.00	15.00		1.00	6.20	7.50	1.00
04	250	25	21.50	15.00	17.50	---	1.25	10.25	1.00	2.00	0.75	2.13	1.38	10.25	10.25	2.00	1.00	9.75	0.188	6.00	0.75	10.25	13.00	1.13	9.00	1.00	1.25	10.96	15.00	15.00	1.00	16.00	16.00		1.00	6.45	8.50	1.00
05	300	30	22.50	16.00	18.50	9.50	1.25	11.00	1.00	2.00	0.75	2.38	1.63	11.00	11.00	2.50	1.00	10.50	0.188	7.00	0.75	11.00	14.00	1.13	10.00	1.00	1.25	11.71	15.00	15.00	1.00	16.00	16.00		1.00	6.70	9.00	1.25
06	350	35	24.00	17.50	20.00	11.00	1.25	12.00	1.00	2.00	0.75	2.38	1.63	12.00	12.00	3.00	1.00	11.50	0.188	8.00	0.75	12.00	15.00	1.13	11.00	1.00	1.25	12.71	16.00	16.00	1.00	17.00	17.00		1.00	6.70	10.00	1.25
07	400	40	25.00	18.50	21.00	12.00	1.50	12.75	1.25	2.25	1.00	2.63	1.63	12.75	12.75	3.50	1.25	12.25	0.188	9.00	0.75	12.75	16.00	1.38	12.00	1.25	1.50	13.46	18.00	18.00	1.25	19.00	19.00		1.25	7.95	10.50	1.25
08	450	45	26.50	20.00	22.50	13.50	1.50	13.50	1.25	2.25	1.00	2.63	1.63	13.50	13.50	4.00	1.25	13.00	0.188	10.50	0.75	13.50	16.50	1.38	13.50	1.25	1.50	14.21	18.00	18.00	1.25	19.00	19.00		1.25	7.95	11.00	1.25
09	500	50	27.50	21.00	23.50	14.50	1.75	14.00	1.25	2.50	1.00	2.88	1.88	14.00	14.00	4.50	1.25	13.50	0.188	11.50	0.75	14.00	17.00	1.38	14.50	1.50	1.50	14.71	19.00	19.00	1.25	20.00	20.00		1.25	8.45	11.75	1.50
10	550	55	28.50	22.00	22.50	---	1.75	14.75	1.25	2.50	1.00	2.88	1.88	14.75	14.75	5.00	1.25	14.25	0.188	12.50	0.75	14.75	17.50	1.38	15.50	1.50	1.50	15.46	20.00	20.00	1.25	21.00	21.00		1.25	8.45	12.25	1.50
11	600	60	29.50	23.00	23.50	15.00	1.75	15.50	1.25	2.50	1.00	2.88	1.88	15.50	15.50	5.50	1.25	15.00	0.188	13.50	0.75	15.50	18.50	1.38	16.50	1.50	1.50	16.21	21.00	21.00	1.25	22.00	22.00		1.25	8.45	12.75	1.50
12	650	65	30.00	23.50	24.00	15.50	2.00	16.00	1.25	2.50	1.00	2.88	1.88	16.00	16.00	6.00	1.25	15.50	0.188	14.50	0.75	16.00	19.00	1.38	17.50	1.50	1.50	16.71	21.00	21.00	1.25	22.00	22.00		1.25	8.70	13.25	1.50
13	700	70	31.00	24.50	25.00	16.50	2.00	16.50	1.50	2.75	1.25	3.38	2.13	16.50	16.50	6.50	1.50	16.00	0.188	16.00	0.75	16.50	19.50	1.38	19.00	1.50	1.50	17.21	22.00	22.00	1.50	23.00	23.00		1.50	9.95	13.75	1.75
14	750	75	32.00	25.50	26.00	17.50	2.00	17.25	1.50	2.75	1.25	3.38	2.13	17.25	17.25	7.00	1.50	16.75	0.188	17.00	0.75	17.25	20.00	1.38	20.00	1.50	1.50	17.96	23.00	23.00	1.50	24.00	24.00		1.50	9.95	14.25	1.75
15	800	80	33.00	26.50	27.00	18.50	2.00	17.75	1.50	3.00	1.25	3.38	2.13	17.75	17.75	6.50	1.50	17.25	0.188	16.00	1.00	17.75	21.00	1.63	19.00	1.75	1.75	18.46	24.00	24.00	1.50	25.00	25.00		1.50	9.95	15.00	1.75
16	850	85	33.50	27.00	27.50	20.00	2.25	18.25	1.50	3.00	1.25	3.63	2.38	18.25	18.25	6.50	1.50	17.75	0.188	16.00	1.00	18.25	21.50	1.63	19.00	1.75	1.75	18.96	24.00	24.00	1.50	25.00	25.00		1.50	10.45	15.50	2.00
17	900	90	34.50	28.00	28.50	21.00	2.25	18.75	1.50	3.25	1.25	3.63	2.38	18.75	18.75	6.50	1.50	18.25	0.188	16.00	1.00	18.75	22.00	1.63	20.00	2.00	1.75	19.46	25.00	25.00	1.50	26.00	26.00		1.50	10.45	16.00	2.00
18	950	95	35.00	28.50	29.00	21.50	2.25	19.25	1.50	3.25	1.25	3.63	2.38	19.25	19.25	6.50	1.50	18.75	0.188	16.00	1.00	19.25	22.00	1.63	21.00	2.00	1.75	19.96	26.00	26.00	1.50	27.00	27.00		1.50	10.45	16.00	2.00
19	1000	100	36.00	29.50	30.00	22.50	2.50	19.75	1.50	3.25	1.25	3.63	2.38	19.75	19.75	7.00	1.50	19.25	0.188	17.00	1.00	19.75	22.00	1.63	22.00	2.00	1.75	20.46	26.00	26.00	1.50	27.00	27.00		1.50	10.70	16.50	2.00

* VERTICAL LOADS LISTED IN THE BEARING SCHEDULE ARE ACTUAL SERVICE LOADS. THE PERCENTAGE INCREASE OF THE ALLOWABLE UNIT STRESS (AS PER COLUMN 14 OF AASHTO TABLE 3.22.1A AND DIVISION I-A SEISMIC DESIGN) HAS NOT BEEN FACTORED INTO THESE VALUES.
* ALLOWABLE COEFFICIENT OF FRICTION IS BASED ON MAXIMUM BEARING PRESSURE (PTFE) OF 3500 psi.
* FRICTIONAL RESISTANCE OF BEARING SLIDE SURFACE HAS NOT BEEN INCLUDED IN SPECIFIED HORIZONTAL LOADS.

* FIXED AND EXPANSION BEARINGS HAVE BEEN DESIGNED TO PROVIDE A MAXIMUM HORIZONTAL LOAD CAPACITY LESS THAN OR EQUAL TO 10% OF VERTICAL LOAD CAPACITY.
* EXPANSION BEARINGS HAVE BEEN DESIGNED FOR A MAXIMUM LONGITUDINAL MOVEMENT OF 1-INCH PLUS CONSTRUCTION TOLERANCES IN ACCORDANCE WITH AASHTO 16th EDITION; DIVISION I; SECTION 20.2.1.3(c). SEE GENERAL NOTE 20.

BILL OF MATERIALS

LN	MARK	QTY UNIT	DESCRIPTION	MATERIAL
01	PA1	1	MASONRY PLATE	ASTM A36
02	PB1	1	SOLE PLATE	ASTM A36
03	PC1	1	UPPER BRG. PLATE	ASTM A36
04	PD1	1	LOWER BRG. PLATE	ASTM A36
05	PF1	1	SLIDE PLATE	ASTM A36
06	ssa2	1	STAINLESS STEEL	A240 – TYPE 304 12 GA 20 Micro-Inch RMS
07	ssb2	2	STAINLESS STEEL	A240 – TYPE 304 12 GA 20 Micro-Inch RMS
08	ba1	1	SHEAR PIN	ASTM A193 GR. B7
09	ba2	2	GUIDE BARS	ASTM A108 GR. C1018
10	ma1	1	POLYTRON ELEMENT	SEE NOTE 5
11	mb1	1	PTFE	SEE NOTE 6
12	mc1	2	SIDE PTFE	SEE NOTE 7
13	mb2	1	BEARING PAD	POLYCHLOROPRENE
14	sa2	6	COUNTERSUNK SCREWS	GRADE 5

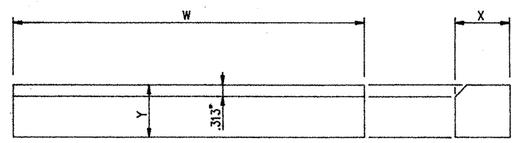

Guide Bars – ba2

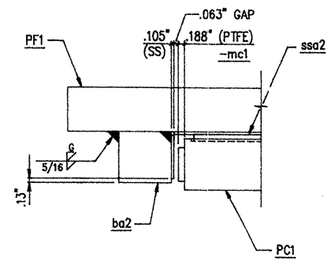

DETAIL "A"
GUIDE BAR WELD DETAIL

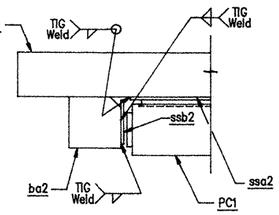

DETAIL "E"
STAINLESS WELD DETAIL

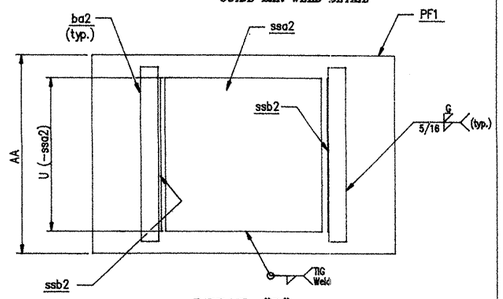

DETAIL "B"
STAINLESS PLACEMENT DETAIL

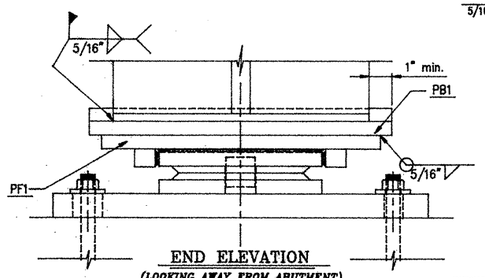

END ELEVATION
(LOOKING AWAY FROM ABUTMENT)

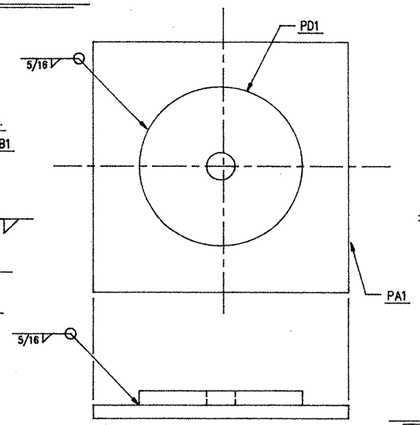

DETAIL "C"
LOWER BEARING PLATE WELD DETAIL

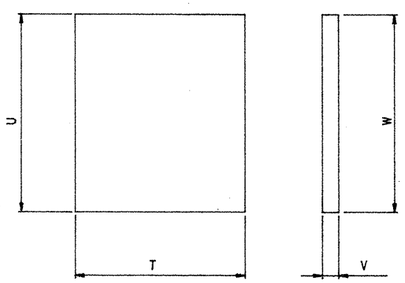

Mirror Stainless Plates – ssa2 & ssb2

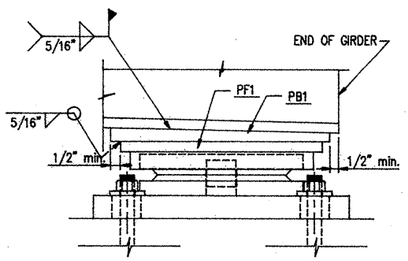

SIDE ELEVATION

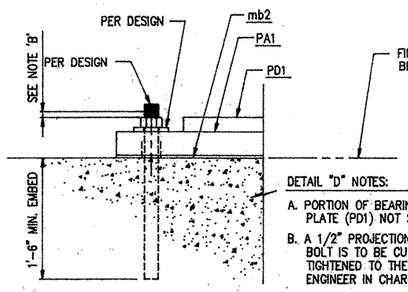

DETAIL "D"
ANCHOR BOLT DETAIL

DETAIL "D" NOTES:

A. PORTION OF BEARING ABOVE LOWER BEARING PLATE (PD1) NOT SHOWN IN DETAIL "D."
B. A 1/2" PROJECTION IS TO BE LEFT. ANCHOR BOLT IS TO BE CUT AFTER THE NUT IS TIGHTENED TO THE SATISFACTION OF THE ENGINEER IN CHARGE.

PADOT DWG. # 97-601-BQAD

TOLERANCING:
PROVIDE TOLERANCE IN ACCORDANCE WITH PUB 408, SECTION 1111.03.
BEARING HEIGHT +/- 1/8"

REVISIONS

GUIDED EXP. DISC BEARING

PROJECT INFORMATION:

CONSULTANT:

CONTRACTOR:

R. J. WATSON, INC.
P. O. BOX : 85
EAST AMHERST, NEW YORK 14051

PRODUCTION COORDINATOR: DAVID G. STAFFORD, R. J. WATSON, INC.
INSPECTION, SAMPLING, & TESTING COORDINATOR: JAY C. CONKLIN, R. J. WATSON, INC.
FABRICATOR: NATIONAL BRIDGE CO. INC., 1060 MILITARY ROAD, BUFFALO, NEW YORK 14217
OWNER: COMMONWEALTH OF PENNSYLVANIA, DEPARTMENT OF TRANSPORTATION, BUREAU OF DESIGN

STANDARD DISC BEARING DETAILS

DTL'D By: MA	DATE: 7-FEB.-97	JOB REFERENCE: 97010
CHK'D By: JC	DATE: 4-JUN.-98	DRAWING No: 7010-2
APP'D By:	DATE:	SHEET NUMBER 2 of 6.

STANDARD No.: DBU-1

NOTE:
FOR CLARITY PTFE and STAINLESS STEEL NOT SHOWN ON PLAN & SIDE VIEWS.

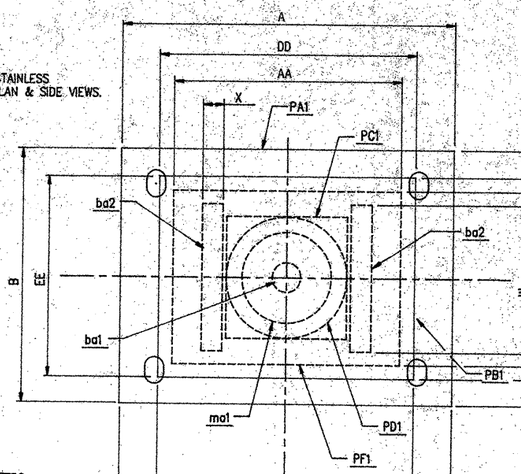

PLAN VIEW

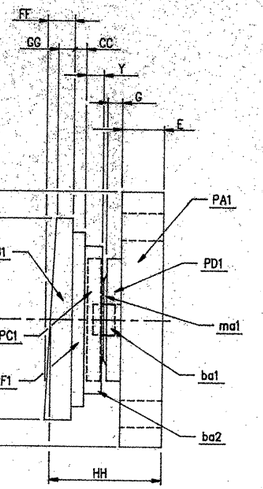

SIDE ELEVATION

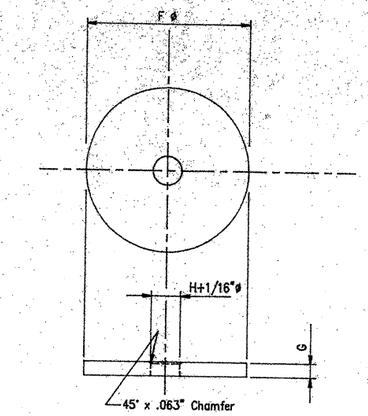

Lower Bearing Plate – PD1

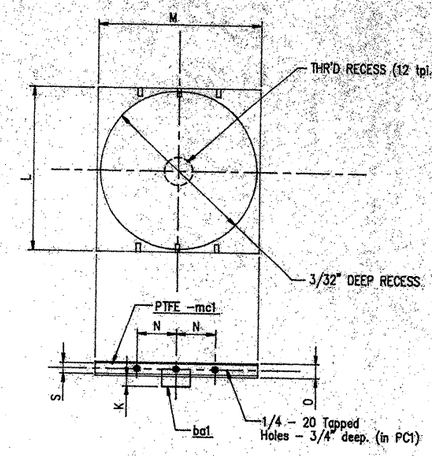

Upper Bearing Plate – PC1

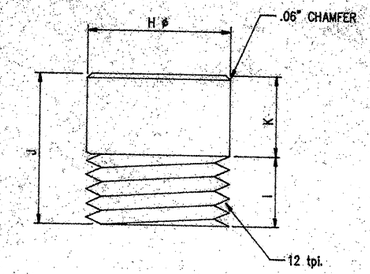

Shear Pin – ba1

NOTE:
FOR WELDING PARAMETERS, SEE DETAILS "A", "B", & "C" ON SHEET NO. 2.

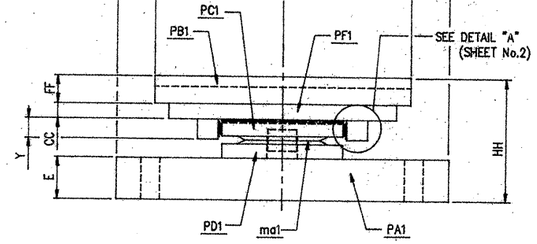

END ELEVATION

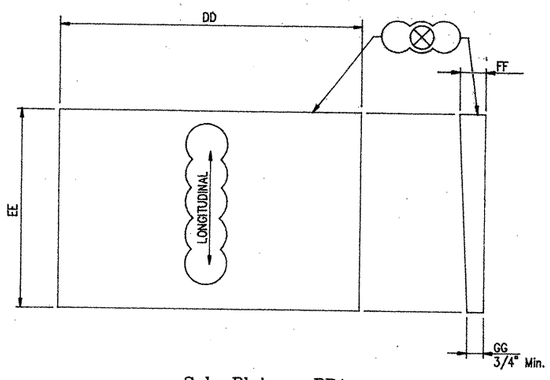

Sole Plate – PB1

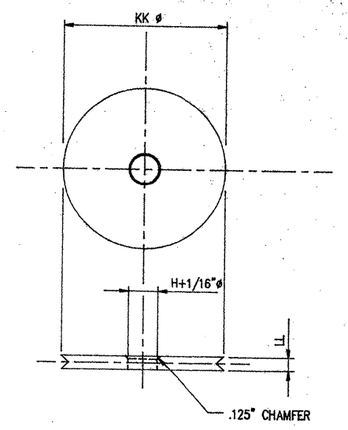

Polytron Disc – ma1

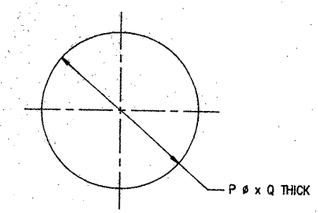

PTFE DISC – mb1

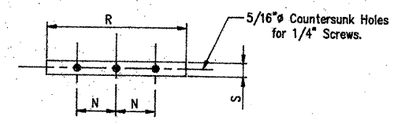

SIDE PTFE – mc1

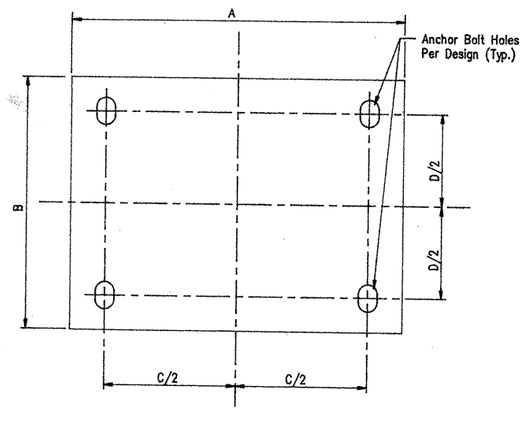

Masonry Plate – PA1

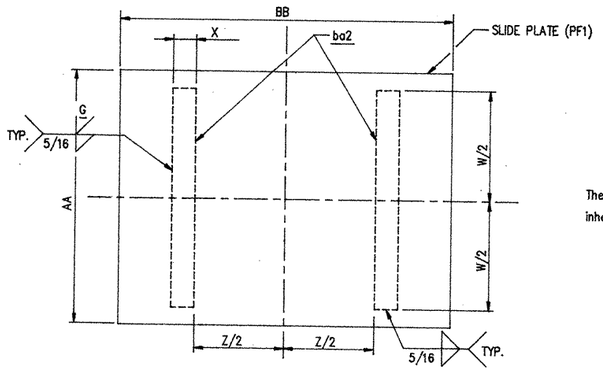

Slide Plate – PF1

GUIDE BAR ATTACHMENT DETAIL

CLOUDED NOTES ARE TO BE PERMANENTLY MARKED IN POSITIONS SHOWN ON DETAILS.

PENNSYLVANIA DEPARTMENT OF TRANSPORTATION RECOMMENDED

Scott Christ

CHIEF BRIDGE ENGINEER

JUL 27 1998

The details shown on these drawings reflect the design assumptions inherent in the calculations that form the basis of these details.

COMMONWEALTH OF PENNSYLVANIA REGISTERED PROFESSIONAL MANFRED LO ... ENGINEER

6-15-1998

PADOT DWG. # 97-601-BQAD

TOLERANCING:
PROVIDE TOLERANCE IN ACCORDANCE WITH PUB. 408, SECTION 1111.03.

BEARING HEIGHT +/- 1/8"

REVISIONS

GUIDED EXP. DISC BEARING

PROJECT INFORMATION:

CONSULTANT:

CONTRACTOR:

R. J. WATSON, INC.
P. O. BOX : 85
EAST AMHERST, NEW YORK 14051

PRODUCTION COORDINATOR: DAVID G. STAFFORD
R. J. WATSON, INC.

INSPECTION, SAMPLING, & TESTING COORDINATOR:
JAY C. CONKLIN
R. J. WATSON, INC.

FABRICATOR: NATIONAL BRIDGE CO. INC.
1060 MILITARY ROAD
BUFFALO, NEW YORK 14217

OWNER: COMMONWEALTH OF PENNSYLVANIA
DEPARTMENT OF TRANSPORTATION
BUREAU OF DESIGN

STANDARD DISC BEARING DETAILS

DTL'D By:	MA	DATE: 7-FEB.-97	JOB REFERENCE: 97010
CHK'D By:	JC	DATE: 4-JUN.-98	DRAWING No: 7010-1
APP'D By:		DATE:	SHEET NUMBER 1 of 6.

Product:

Item 8550-**5006** Bebo Precast Concrete Arch Bridge System (English Units) - Lump sum
Special Provisions and Standard Detail Drawings
PADOT DWG. #98-211 PE **(English Units)**

Approval Date:

January 31, 2000

Initiated By SOL:

Not Applicable

Application/Use:

Bebo Precast Concrete Arch Bridge System manufactured by Bebo Arch System, 514 Township Line Road (Tel. No. 215-257- 8081) have been approved to be used as an **"alternate"** or **"as-designed"** to concrete box culvert.

District Engineers/Administrator may permit the use of these Bebo Precast Concrete Systems as an "alternate" or "as-designed" on a project by project basis.

Specifications:

Attached is a copy of the Design/Material/Construction Specifications specified on the Standard Detail Drawings PADOT #98-211 PE (English Units) dated January 31, 2000 for Bebo Precast Concrete Arch Bridge System for your use.

Standard Drawings:

Attached is a copy of the Standard Detail Drawings PADOT #98-211 PE (English Units) dated January 31, 2000for Bebo Precast Concrete Arch Bridge System for your use.

Comment:

On those projects permitting the use of this system as an alternate, a special provision should be included in the proposal to indicate that the "Bebo Precast Concrete Arch Bridge System" as an alternate is allowed.

The contractor will be required to revise the pertinent contract drawings as per DM-4, PP 1.10 to show the usage of "Bebo Precast Concrete Arch Bridge System" and will also be

required to reimburse the Department a fee of **$1000** per design for the review and approval of the revision. This should be specified in the contract's Special Provision.

FHWA approval has been secured for Bebo Precast Concrete Arch Bridge System.

DESIGN SPECIFICATIONS FOR BEBO PRECAST CONCRETE ARCH BRIDGE SYSTEM

1.0 General:

a. BEBO Bridge System representative and or his designated design consultant to prepare the design calculations of precast concrete arch system which includes arch elements, spandrels, and wing walls (design of foundations by others) in accordance with the guidelines specified herein and as indicated on the Standard Detail Drawings (Drawing 98-211 PE). Submit design procedures or permissible variations other than those contained herein for approval to Bureau of Design, Bridge Division, Harrisburg, Pennsylvania.

b. The BEBO Bridge System's design consultant takes full responsibility for the engineering theory, calculations, correctness and ensuring all design assumptions are validated in the contract documents, either by needed details or construction specifications.

c. BEBO precast bridges are permitted on Non – NHS System (non-critical location)and will be limited to spans not to exceed 84 feet.

d. Secure Chief Bridge Engineer's approval in writing before incorporating BEBO Bridge System in any project.

2.0 Design:

a. Secure District Bridge and Geotechnical (Soils) Engineers' approval before incorporating BEBO precast bridges in any project.

b. Provide at no expense to the Department four sets (three sets to District and one set to Central Office Bridge Division) of construction drawings (22" x 34"), calculations erection methods, and detailed erection plans for approval. Provide approved drawings, using Department drafting standards. Show a professional engineer's seal licensed in Pennsylvania with valid signature in ink, the date signed, a business name and business address, on the first sheet of the design drawings, use mylar furnished by the Department. The District Bridge Engineer will sign the final design plans.

Include the following statement on the first sheet of the drawings above the P.E. Seal: "I hereby certify that all design assumptions have been validated either through construction details or notes on these drawings or through construction details or notes on these drawings or through the contract plans and provisions.

c. On the first sheets of the computations, show a professional engineer's seal (licensed in Pennsylvania), signature and the date signed. BEBO Bridge System parameters, and other limitations on fill heights are as per manufacture's standard drawings.

d. In the event that certain design parameters, stresses or specifications are in conflict, the following order of performance governs:

1. Design requirements listed in "Special Drawings and Special Design Requirements" (Part B) of the special provision.

2. Design related strike off letters in effect on the date of project advertisement.
Refer to list in Part B.

3. PDT – Design Manual Part 4 (Structures).

4. PDT – Design Standards.

5. AASHTO Standard Specifications for Highway Bridges. (1992 and approved Interim Specifications.)

e. In the event that a clear order of predominance cannot be established or a difference in the interpretation of the design cannot be solved, the Chief Bridge Engineer will arbitrate and make final decision.

f. Design and rate for HS-25 and modified (125%) Alternate Military Loading and P-82 with Service Load Design. Comply with the design criteria in Design Manual Part 4 Structures, the AASHTO Standard Specifications for Highway Bridges, and as specified, subject to exceptions and/or additions under "SPECIAL DRAWINGS AND SPECIAL DESIGN REQUIREMENTS" (Part B).

g. Check foundation pressure, scour and settlement to ensure that no foundation failure occurs. Preferably, provide footing on non-yielding foundation material. However, allowable differential settlement for footing on soil supporting the BEBO structure = 1/400 ft. per ft. (max.) of the arch span. The maximum difference in vertical displacements should not exceed ½ inch per 30 feet along the length of one foundation. Bebo System manufacturer will provide horizontal and vertical design loads at the top of the foundation to the designer. Design structural components to resist forces caused by this differential settlement. Adequately reinforce the entire footing as required by design

h. Do not reduce the original horizontal and vertical clearances and/or waterway opening. Do not change the roadway grade and/or alignment.

i. The curb and parapet are to meet the Department standard shape, size, and reinforcement. All reinforcement bars in the curb and parapet are to be epoxy coated.

j. Provide minimum cover of 18" from top of precast crown to top of pavement.

k. Do not change bottom of footing elevation unless authorized by the District Bridge Engineer / District Geotechnical Engineer (Soils) Engineer.

l. Provide a suitable drainage system (drainpipe) or weep holes at regular intervals (not to exceed 15') along the culvert to release hydrostatic pressure. Where significant seepage or relatively rapid accumulation of water is anticipated behind the wall, incorporate drainage pipe as specified, into the two-foot minimum width of select backfill, wrap with geotextile fabric, behind the wall to improve drainage conditions. Direct seepage from drainage pipe to weep holes along the exterior face of the wall or to the storm water conveyances.

m. Place footings below scour and frost depths. Use PADOT – Department criteria in determining scour depth. Place bottom of footing as a minimum depth equal to prevailing frost depth or scour depth but not less than 3 feet below ground elevation unless constructed on rock foundation or otherwise indicated. If non-yielding material is found above the scour depth, the height of non-yielding material will govern.

n. Provide cast-in-place parapets, barriers.

o. Provide ductile joint system between vertical leg of the precast segment and footer as indicated on the Standard Detail Drawings.

p. Use Working Stress Design Methods

q. Design of cast-in-place foundation shall be reviewed and acceptable by BEBO Bridge System's Engineer prior to construction.

CONSTRUCTION SPECIFICATIONS FOR BEBO PRECAST CONCRETE ARCH BRIDGE SYSTEM

BEBO Bridge System (Arch, Spandrel, Wing wall: Cast-in-place footings constructed by others)

1.0 Description

This work consists of furnishing and constructing a BEBO Precast Concrete Arch Bridge System (arch elements, spandrels, endwalls, wing walls and cast-in-place footing by others) including excavation of on-site soils and placement and compaction of structure and random backfill, in accordance with these specifications and in conformity with the lines, grades, and dimensions, locations, and sections shown on the approved drawings and in accordance with the contact documents and the requirements set forth herein.

2.0 Materials

a. Provide materials and workmanship in accordance with Publication 408, and
supplements thereto, and/or special conditions as specified herein.

b. Precast Concrete Products. Section 714 and as follows:

1. Concrete segments: Provide concrete in accordance with Section 704
minimum 28 day compressive strength of 5000 psi. Whenever high range water reduces are used, provide a mix with a maximum slump of 7" and air content of 6 +/- 1.5%. Do not place concrete when ambient temperature are below 40F or above 100F.

2. Cement Concrete: Section 704. Use Class A concrete for cast-in-place footings and Class AA for curbs and parapets. Do not use admixture containing chlorides.

c. Selected Borrow Excavation – Structural Backfill: Section 1001.3(t) – pub 408 as shown on standard drawing RC-12. Structure Backfill shall also meet the minimum requirements set forth by the manufacturer. Do not use metallurgical slag or cinders or any 'R' class rock.

d. Geotextiles: Class 2 type A, Section 735.

e. Joint Wrap: ASTM C-877 Type I or C-877 Type II (Excluding Steel Wraps) with primer.

f. Mortar: Section 705.7(a)

g. Grout: Shall be a minimum of 5000 psi at 28 days.

h. Concrete Sealers: Approved by MTD.

i. Pipe Underdrain: Section 610.2.

j. High Strength, hot dipped galvanized bolts & nuts per section 1105.02(c)3
Certification as specified in section 106.03(b)3

3.0 Fabrication, Testing and Inspection

a. Fabricate in accordance with approved shop drawings and approved quality control plan, and Publication 408, Section 714. Maintain secondary concrete cure in a minimum 50F environment until the units have reached a compressive strength of 3500 psi.

b. Concrete Finish. Provide steel form finish for front face. The rear face shall have a floated surface finish unless otherwise indicated or specified. Screed to eliminate open pockets of aggregate and surface distortions in excess of ¼ inch on both faces of the precast concrete segment.

When a special or decorative surface finish is required, display the typical sample of the face segment showing the color, texture and finish for approval.

c. Tolerances: Manufacture all precast segments within the following tolerances:

1. The internal dimension does not vary more than 1 percent nor more than 1 ½ inches from the design dimensions whichever is less.

2. The arch dimension does not vary more than ¾ inch from design dimension.

3. The slab and wall thickness do not vary ¼" less than that shown in the design. A thickness more than required in design will not cause rejection.

4. The maximum variations in position of the reinforcement in any direction will be +/- ½". In no case may the cover over the reinforcement vary by more than ¼" from the position shown on the approved drawings. The cover at the end of the reinforcement will be a minimum of ½" at the mating surfaces.

5. The underrun in length of a section will not be more than ½ inch in any precast concrete segment.

6. The outside diagonal dimensions shall not vary more than 1 percent nor more than 1 ½" inches from the design dimensions whichever is less.

7. Other tolerances in accordance with ACI 117.

d. Reject individual precast concrete segments for any of the following:

1. Fractures or cracks passing through the wall, except for a single end crack that does not exceed one half the thickness of the wall.

2. Defects that indicate proportioning, mixing and molding not in compliance with the specification as specified or indicated.

3. Honeycombed open texture.

4. Test core strength is less than design concrete strength.

5. Damaged ends where such damage would prevent making a satisfactory joint.

6. Dimensions not conforming to the allowable tolerances as specified.

7. Color variation on front face.

Mark the rejected precast concrete segments "REJECTED for PENNDOT USE" with waterproof paint.

e. Repair procedures require approval by the engineer.

f. Mark each precast concrete segment with waterproof paint to show the following information on the inside surface of the arch segment.

- Size: Span x Rise (in mm)
- Earth cover (in mm)
- Date of manufacture
- Name or Trademark of the Manufacture
- Date of installation
- Inspection date and stamp

g. Manufacturer must be listed in Bulletin 15, "Approved Construction Material".

4.0 Handling, Transportation, and Shipping

a. Handling, storage, and transportation must be in accordance with Pub 408, Section
714.10 and 714.11

5.0 Construction

a. In accordance with the applicable sections of the Specifications, Publication 408, Supplements thereto, and/or the Special provisions for each respective item, and additional requirements specified herein. Submit construction procedures and permissible variations other than those contained herein, for approval.

No construction of the precast concrete bridge will be permitted without the approved shop drawings or a preconstruction meeting between PENNDOT, contractor and manufacturer representatives.

b. Excavation and Foundations.

Grade the foundation for the structure level for a width of 1'-0" beyond the width of the strip foundation when strip foundations are utilized. Prior to construction, except where constructed in rock, compact the foundation with a smooth wheel vibratory roller. Remove all foundation soils determined by the Engineer to be unsuitable, and replace with granular material (2A). Excavate in accordance with Section 203 to limits and construction stages as indicated.

The Engineer shall certify that the bearing capacity meets or exceeds the footing design requirements, prior to the contractor

COMMONWEALTH OF PENNSYLVANIA
REGISTERED PROFESSIONAL
MICHAEL A. GRAPSY
ENGINEER

I hereby certify that all design assumptions have been validated Either through construction details or notes on these drawings or through the contract plans and provisions.

PENNSYLVANIA
DEPARTMENT OF TRANSPORTATION
RECOMMENDED
Scott Christie
CHIEF BRIDGE ENGINEER

JAN 3 1 2000

△	
△	
△	

BEBO ARCH SYSTEM

514 TOWNSHIP LINE ROAD
TELFORD, PA 18969
PHONE: 215-257-8081
FAX: 215-453-1671

BEBO ARCH PRECAST STRUCTURE
DESIGN & CONSTRUCTION SPECIFICATIONS
(ENGLISH UNITS)

PADOT DWG. # 98-211 PE

pouring of the footings. A copy of the letter shall be submitted to the manufacturer, prior to shipment of BEBO Arch elements.

Provide properly cured (reach a minimum compressive strength of 2750 psi before placement of the precast concrete segments). cast-in-place footings, in accordance with grade shown. Provide a smooth float finish to the dimensions and details as indicated. Provide the depth of the keyway and leveling pads locations as indicated on the contract plans and recommended by the manufacturer.

Before starting erection or arch elements, check the following items on the foundation:

1. Distance between two opposite arch key backs; to be the arch outside span plus 8 inches approximately or per manufacturers submittal drawings.
2. Alignment of the arch key along the length of the foundation.
3. Total length of the arch foundation in order to calculate the exact spacing needed between the arch elements.
4. Foundation surfaces for the spandrel and wingwalls to ensure that they are level and within 1/4 inch of the dimensions indicated.
5. Anchor rod holes in the wingwall foundation for proper positioning.
6. The arch elements are plum and perpendicular to the keyway and foundation relative to the arch introdose and springline.

Arch leveling pads:

1. Mortar leveling pads must be poured in the arch keys to guarantee correct seating of the arch elements. Leveling pads must be approximately 2 inches thick and 16 inches long to ensure that each arch element is resting on approximately 8 inches of pad at each joint.
2. The leveling pads are to be poured to within 1/8 inch of the required elevation.
3. The grout shall be designed f(c) = 5000 psi with maximum aggregate size of ¼ inch.
4. No loads are allowed on the mortar leveling pads within 72 hours of their placement. (e.g. Arch is set on cured pads)
5. Provide ductile joint detail as indicated.

c. Erection of the precast concrete arch elements.

Install precast concrete segments in accordance with the manufacturer's recommendations as shown on the approved shop drawings.

A sufficient quantity of 1-1/2" x 7-1/2" x 16" concrete blocks as well as hardwood wedges must be available and on site for use as shims to prevent lateral spreading of the arch after installation. Also, a good supply of ¼, ½ inch and 1/8 thick steel or plastic plate shims for various shimming purposes should be on site.

Measure from the end of the foundation and mark the top of each leveling pad where each arch is to be placed. Spacing between arch elements is approximately ½ inch. Check the total length of the foundation against this value. It is helpful to have ½ inch thick wooden boards or plastic shims available to assist in spacing the arch elements as they are being set.

A spreader beam must be used to lift the arch elements from the truck.

A sling assembly, with rigging must be used to rotate the element in the air to the installation position.

The BEBO arch element is then lowered into/onto the key. It is imperative that any lateral spreading of the arch element be avoided after it is installed. Therefore, the concrete blocks are placed in the key on the leveling pads and smaller shims and wedges added before complete release of the arch element from the crane.

Make sure that a BEBO end arch element (arch element with curb) is placed as the first and last arch element.

BEBO Twin-leaf arch units are transported and lifted/rotated in a similar manner as the single-leaf elements. Two double-drum cranes (or one crane and displaceable scaffolding) are required for the erection of the precast arch units.

Ideally, one crane shall be located on each (outer) side of the foundations to independently lift half-arch units from the delivery trucks and into position. The two twin units are lifted and positioned simultaneously.
Alternatively, if cranes are to be positioned on the same side of the foundations or within the arch span, they should be located so that the final jointing movement of the units at the crown can be effected without damage to the interlocking joint key.

Before releasing the load of each arch half unit from the crane, both elements must be blocked at the foundation key in the correct position and the curved tie rod must be inserted and fixed in the blockouts at the crown joint.
Again, check the span width at regular intervals to minimize the spreading.
Once correctly positioned and aligned, the twin-leaf units are jointed at the crown with cast-in-place concrete as shown in the drawings.

BEBO Bridge System twin-leaf profiles are designed for the arch dead load to act on the three-pinned arch. In case scaffoldings are used for the erection, they must be removed (or lowered) before the crown joint is cast.

d. Erection of Precast Spandrel Walls.

Place the spandrel wall segments onto the arch and foundation on a wet layer of mortar starting with the center piece. Add the adjoining lateral segments, attaching them temporarily to the arch end element and the wingwalls.
The keyway joint between the spandrel wall and the first wing wall element should be clean, smooth and uniform so to provide an even bearing support for the spandrel wall.

e. Erection of Precast Wingwalls.

Place a layer of mortar on the wingwall foundation surface, using the leveling pads for guidance. Make sure that the anchor rod holes are recessed.

Place the wingwall elements onto the leveling pads and wet mortar. Insert the 1 ¼ inch diameter by 18 inch long footing anchor rods into the 4 inch diameter precast holes in the wingwall base

f. Waterproofing.

Waterproof tape over joint sealers to be 40 mil thick, 12" wide, self-adhering rubberized asphalt sheet flashing and shall meets the requirements of Material section 2(e) (Sheet 1 of 13).

Apply approved pvc membrane sealer, as recommended by the manufacturer in the backfill above the concrete segments for the full length of the structure or limits which are in contact with the backfill.

g. Grouting.

Fill the arch key with grout. Compact as required to ensure that the entire key around the arch element is completely filled.

Grout the wingwall footing anchor rods.

Fill the lifting and erection anchor recesses with grout.

All grout shall be 5000 psi with maximum aggregate size of ¼ inch.

f. Backfilling and Compaction.

Do not place backfill against any installed structural elements or segments until they have been approved by the Engineer.

Backfill Zones

Zone A: In accordance with section 206.2.(a).1.1a or 1b.

Zone B: Place selected borrow excavation, structure backfill (OGS only) in accordance with the requirement of section 1001.3 (t) and standard RC-12.

Zone C: Road structure per requirements of section 305.

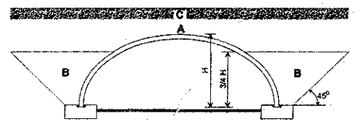

Refer to RC-12

The necessary fill properties for Zone B can also be achieved by the use of flowable backfill, if indicated and/or specified.

Unless otherwise specified, backfilling operations should not begin until the grout of the arch key and wingwall anchor rods has been in place for 72 hours.

Dumping for backfilling is not allowed any nearer than 3 ft to a vertical plane through the arch key.
The fill must be placed and compacted in layers not exceeding 8" loose lifts. The maximum difference in the surface levels of the fill on opposite sides of the arch must not exceed 2 feet. Lines are painted and numbered on arch elements to indicate each backfill level. This serves as a guide for equipment operators and helps to ensure that the maximum difference is not exceeded.

The fill behind wingwalls must be placed at the same time as that of the arch fill. It must be placed in progressively placed horizontal layers not exceeding one foot per layer.

Compact backfill in accordance with section 206.3(b)1

Soil within 1 foot of concrete surfaces should be hand-compacted. Elsewhere, use of rollers is acceptable. If vibrating roller-compactors are used, they should not be started or stopped within Zone B and the vibration frequency should be at least 30 cycles per second.

Provide backfill material and compacting behind wingwalls as specified in Pub. 408

Place a geotextile fabric meeting the requirements of section 212.3(3) class 4-layer separation between zones A and B.

h. Drainage.

Install pipe underdrain as indicated and in accordance with Section 610.3. Install weep holes as per Bridge Standard BD-625 and/or as indicated. Separate all interfacing materials of distinctly different gradation by using Geotextile filter fabric (Class 2, TypeA)

i. Dewatering

Furnish, install, operate and maintain satisfactory dewatering system as required to maintain the site in a dry and workable condition. Include all equipment and materials, and continue as long as necessary.

j. Technical Assistance

Have a company representative present the project site for five consecutive days to assist the fabricator, contractor and Engineer. Provide a technical representative to assist in the event unusual problems or special circumstances arise.

k. Measurement and Payment

Payment shall be considered full compensation for all labor, material, and equipment to install the BEBO Bridge System (arch elements, spandrels, and wingwalls), footings, backfill, roadway and clean up.

The BEBO Bridge System shall be paid for on a lump sum basis.

l. Submittals

Provide (5) copies of shop drawings and calculations.

JAN 3 1 2000

BEBO ARCH SYSTEM
514 TOWNSHIP LINE ROAD
TELFORD, PA 18969
PHONE: 215-257-8081
FAX: 215-453-1671

BEBO ARCH PRECAST STRUCTURE
DESIGN & CONSTRUCTION SPECIFICATIONS
(ENGLISH UNITS)

PADOT DWG. # 98-211 PE

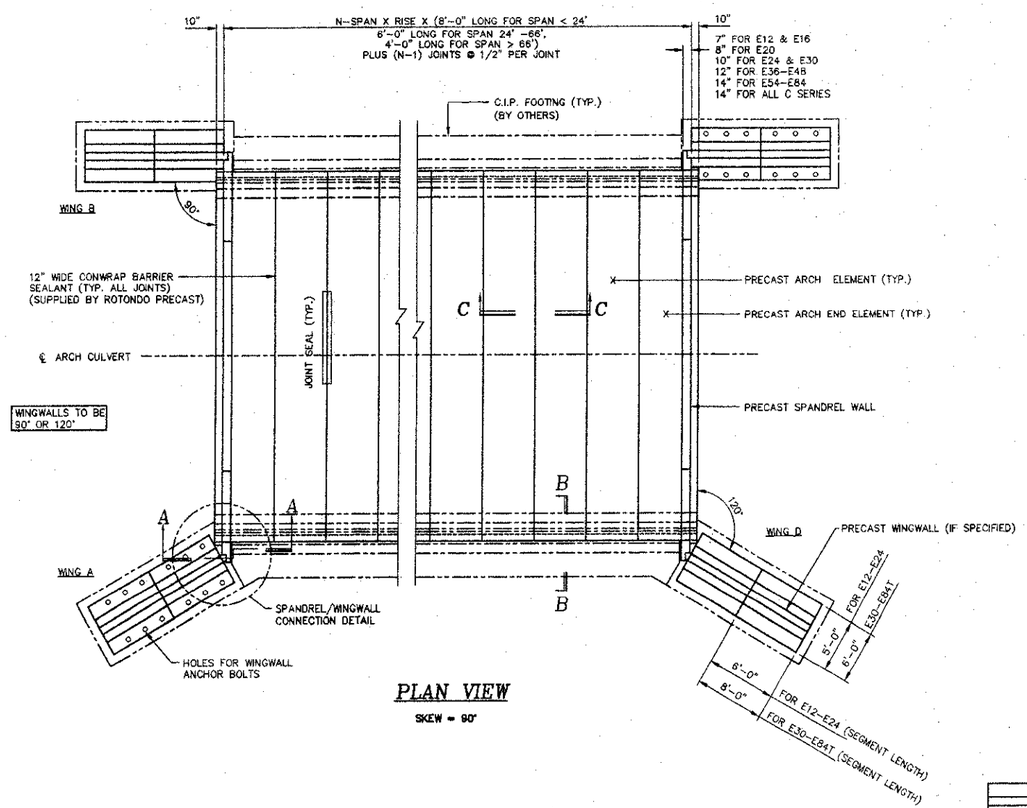

PLAN VIEW

SKEW = 90°

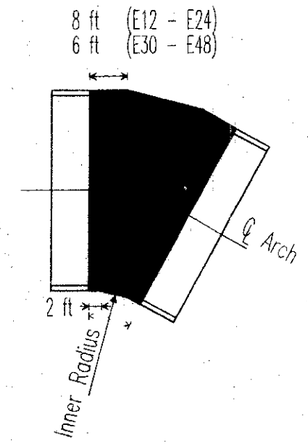

Arch Type	R_i [ft]
E 12	4' 5"
E 16	5' 9"
E 20	7' 1"
E 24	8' 5"
E 30	15' 10"
E 36	18' 10"
E 42	21' 10"
E 48	24' 11"

TAPERED ARCH ELEMENTS

GENERAL NOTES:

MATERIALS AND WORKMANSHIP SHALL BE IN ACCORDANCE WITH PENNSYLVANIA DEPARTMENT OF TRANSPORTATION PUBLICATION 408, AND THE CONTRACT SPECIAL PROVISIONS.

DESIGN SPECIFICATIONS:
DESIGN DIVISION OF 1992 AASHTO "STANDARD SPECIFICATIONS FOR HIGHWAY BRIDGES" AND AS SUPPLEMENTAL BY THE PENNA. DEPT. OF TRANSPORTATION DESIGN MANUAL, PART 4, STRUCTURES.

CULVERT RATING TABLE SPAN W/FILL				MAX. ALLOWABLE
LOADING / RATING	HS20	HS25	P82	AXLE LOAD
INVENTORY (TONS)				
OPERATING (TONS)				

- USE CLASS A CEMENT CONCRETE FOR FOOTINGS
- PROVIDE CONCRETE COVER ON REINFORCING BARS AS NOTED HERE IN
- CHAMFER EXPOSED EDGES 3/4" X 3/4" EXCEPT AS NOTED
- PROVIDE DEFORMED REINFORCEMENT STEEL MEETING THE REQUIREMENTS OF ASTM DESIGNATION 615, GRADE 60 AS SET FORTH IN PUBLICATION 408
- PROVIDE REINFORCEMENT STEEL LAP SPLICE LENGTHS AND EMBEDMENT LEGNTHS OF 30 DIAMETERS OR IN ACCORDANCE WITH AASHTO SPECIFICATIONS, WHICHEVER IS GREATER (SEE BC-736)
- PROVIDE MIN. COVER OF 18" FROM TOP OF PRECAST SEGMENT CROWN TO TOP OF PAVEMENT
- DESIGN LOADS FOR THE FOUNDATION DESIGN WILL BE PROVIDED BY THE BEBO MANUFACTURER
- AT ANY TIME DURING PLACEMENT OF BACKFILL, DO NOT PERMIT A DIFFERENCE IN FILL ELEVATION ON THE SIDES OF THE CULVERT BARREL IN EXCESS OF 24 INCHES. DURING COMPACTION OF THE BACKFILL, DO NOT ALLOW THE WHEELS OF ROLLERS TO COME CLOSER THAN 1 FOOT TO THE FACE OF THE STRUCTURE.
- NOTIFY ALL INVOLVED UTILITY COMPANIES PRIOR TO STARTING WORK. UTILITIES WILL NOT BE DISTURBED OR ENDANGERED DURING CONSTRUCTION OPERATIONS.
- PROVIDE WATERPROOFING MEMBRANE AS PER BD-632 STANDARD DRAWINGS.
- FOR ALTERNATE DESIGN PROJECTS- BEBO P/C STRUCTURE SYSTEM, WINGWALLS AND HEADWALLS/PARAPETS AND FOOTERS WILL BE DESIGNED BY THE CONTRACTOR

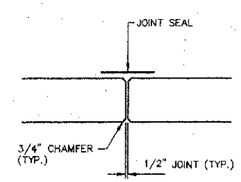

SECTION C-C

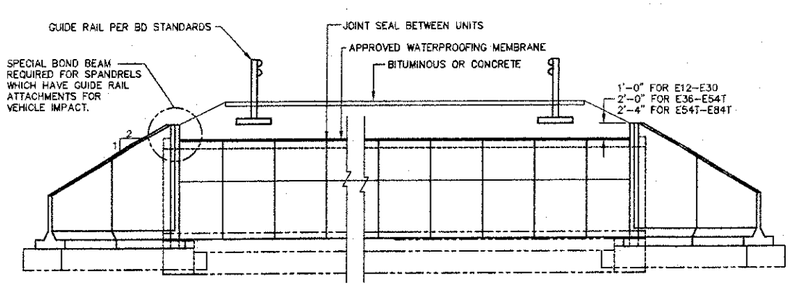

ELEVATION

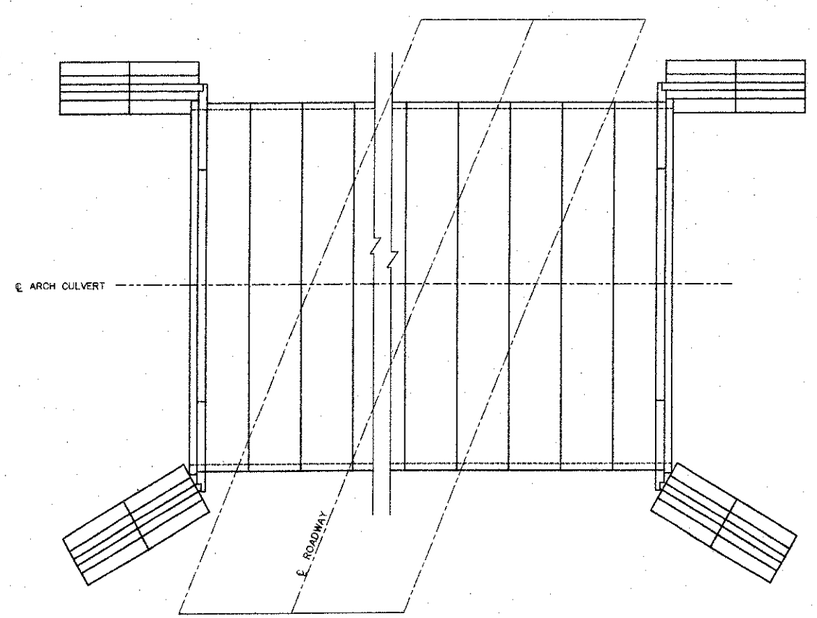

PLAN VIEW

SKEW

JAN 3 1 2001

BEBO ARCH SYSTEM
514 TOWNSHIP LINE ROAD
TELFORD, PA 18969
PHONE: 215-257-8081
FAX: 215-453-1671

BEBO ARCH PRECAST STRUCTURE
DESIGN & CONSTRUCTION SPECIFICATIONS
(ENGLISH UNITS)

PADOT DWG. # 98-211 PE

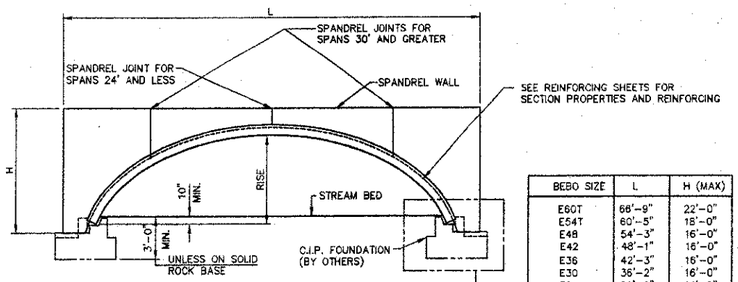

THREE PIECE SPANDREL SHOWN. FOR E24-E12, (2) PIECE SPANDREL IS USED WITH JOINT AT CENTERLINE ARCH SPAN

TYP. END ELEVATION

(WINGWALLS NOT SHOWN)

BEBO SIZE	L	H (MAX)
E60T	66'-9"	22'-0"
E54T	60'-5"	18'-0"
E48	54'-3"	16'-0"
E42	48'-1"	16'-0"
E36	42'-3"	16'-0"
E30	36'-2"	16'-0"
E24	29'-9"	14'-0"
E20	25'-9"	11'-6"
E16	21'-5"	10'-1"
E12	17'-5"	8'-9"

E66T-E84T SPANDREL WALLS AND WINGWALLS TO BE CIP OR MECHANICAL STABILIZED EARTH WALL SYSTEM

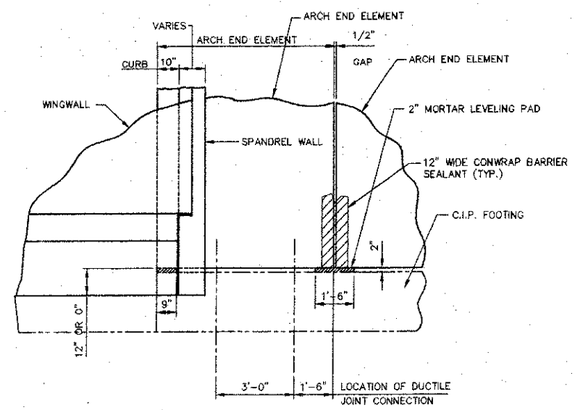

SECTION A-A

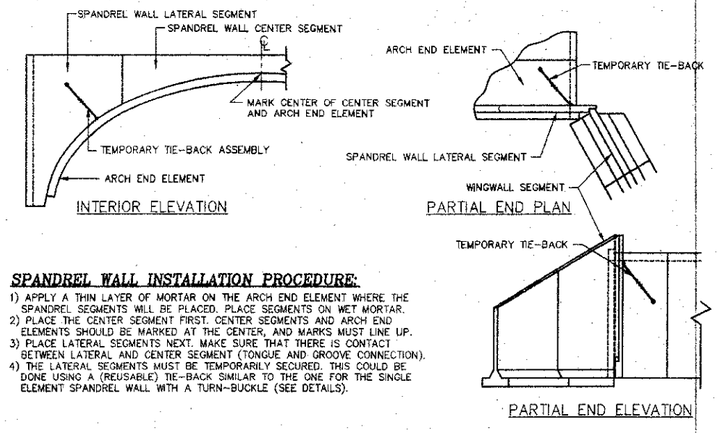

SPANDREL WALL INSTALLATION PROCEDURE:

1) APPLY A THIN LAYER OF MORTAR ON THE ARCH END ELEMENT WHERE THE SPANDREL SEGMENTS WILL BE PLACED. PLACE SEGMENTS ON WET MORTAR.
2) PLACE THE CENTER SEGMENT FIRST. CENTER SEGMENTS AND ARCH END ELEMENTS SHOULD BE MARKED AT THE CENTER, AND MARKS MUST LINE UP.
3) PLACE LATERAL SEGMENTS NEXT. MAKE SURE THAT THERE IS CONTACT BETWEEN LATERAL AND CENTER SEGMENT (TONGUE AND GROOVE CONNECTION).
4) THE LATERAL SEGMENTS MUST BE TEMPORARILY SECURED. THIS COULD BE DONE USING A (REUSABLE) TIE-BACK SIMILAR TO THE ONE FOR THE SINGLE ELEMENT SPANDREL WALL WITH A TURN-BUCKLE (SEE DETAILS).

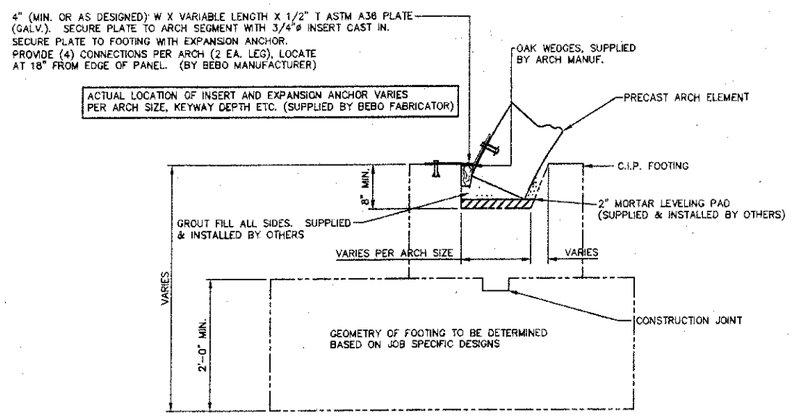

DETAIL A

ALLOWABLE FOUNDATION PRESSURE = 3.0 KSF

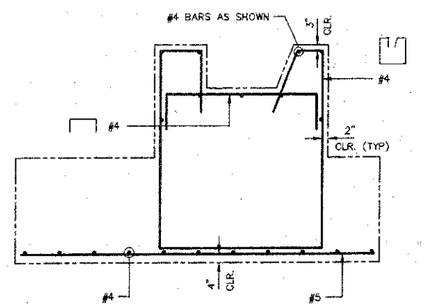

FOOTING REINF.

FOOTING SIZE AND REINFORCEMENT TO BE DETERMINED BY DESIGN

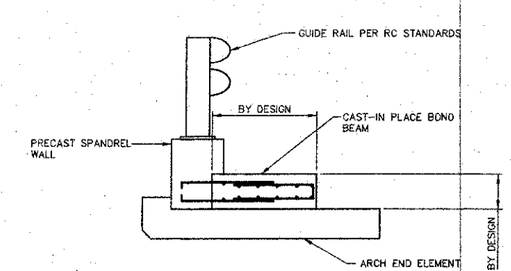

IMPACT SPANDREL DETAIL

REINFORCEMENT AND BOND BEAM TO BE DETERMINED BY DESIGN

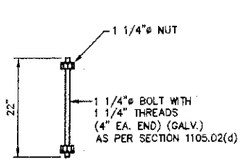

ANCHOR DETAIL

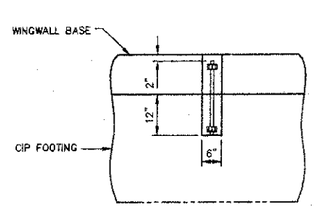

SECTION THROUGH WINGWALL ANCHOR

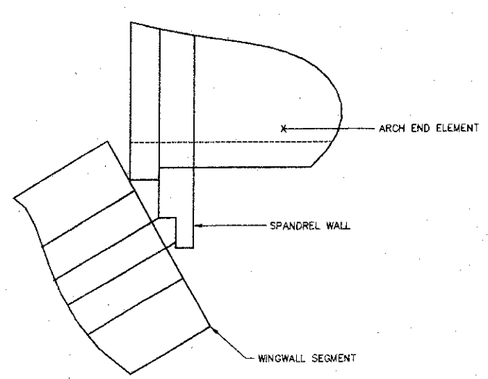

SPANDREL/WINGWALL CONNECTION DETAIL

BEBO ARCH SYSTEM
514 TOWNSHIP LINE ROAD
TELFORD, PA 18969
PHONE: 215-257-8081
FAX: 215-453-1671

BEBO ARCH PRECAST STRUCTURE
DESIGN & CONSTRUCTION SPECIFICATIONS
(ENGLISH UNITS)

PADOT DWG. # 98-211 PE

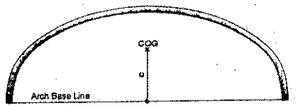

E12	c [ft]	Waterway Area (SQ. FT.)
E12/0	2' - 7"	28.3
E12/1	3' - 2"	39.9
E12/2	3' - 9"	51.8
E12/3	4' - 4 1/2"	63.8
E16	c [ft]	
E16/0	2' - 10"	39.5
E16/1	3' - 5 1/2"	54.4
E16/2	4' - 1"	70
E16/3	4' - 8"	85.9
E16/4	5' - 3 1/2"	101.9
E20	c [ft]	
E20/0	3' - 8 1/2"	69.7
E20/1	4' - 4"	88.7
E20/2	4' - 11 1/2"	108.4
E20/3	5' - 7"	128.3
E20/4	6' - 2 1/2"	148.3
E24	c [ft]	
E24/0	4' - 7 1/2"	108.3
E24/1	5' - 3"	131.5
E24/2	5' - 10 1/2"	155.2
E24/3	6' - 6"	179.1
E24/4	7' - 1 1/2"	203.1
E24/5	7' - 9"	227.1
E30	c [ft]	
E30/0	6' - 0"	181.9
E30/1	6' - 8"	211.2
E30/2	7' - 3 1/2"	240.9
E30/3	7' - 11"	270.9
E30/4	8' - 6 1/2"	300.9
E30/5	9' - 2"	330.9
E36	c [ft]	
E36/0	6' - 6 1/2"	234.8
E36/1	7' - 2 1/2"	269.8
E36/2	7' - 10 1/2"	305.4
E36/3	8' - 6"	341.3
E36/4	9' - 1 1/2"	377.3
E42	c [ft]	
E42/0	7' - 4"	306.7
E42/1	7' - 11 1/2"	347.7
E42/2	8' - 7 1/2"	389.3
E42/3	9' - 3 1/2"	431.2
E48	c [ft]	
E48/0	8' - 8"	431
E48/1	9' - 4"	478.6

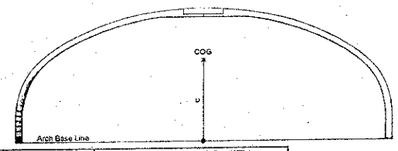

E54T	c [ft]	Waterway Area (SQ. FT.)
E54T/0	10' - 3"	587.6
E54T/1	10' - 11"	641.4
E54T/2	11' - 7"	695.3
E54T/3	12' - 3"	749.3
E54T/4	12' - 11"	803.3
E54T/5	13' - 7"	857.3
E54T/6	14' - 2 1/2"	911.3
E60T	c [ft]	
E60T/0	12' - 3"	807.1
E60T/1	12' - 11 1/2"	867.1
E60T/2	13' - 7 1/2"	927.2
E60T/3	14' - 3 1/2"	987.2
E60T/4	14' - 11 1/2"	1047
E60T/5	15' - 7"	1107
E66T	c [ft]	
E66T/0	13' - 8"	991.8
E66T/1	14' - 4"	1058
E66T/2	15' - 0"	1124
E66T/3	15' - 8"	1190
E66T/4	16' - 4"	1256
E66T/5	16' - 11 1/2"	1322
E72T	c [ft]	
E72T/0	14' - 5"	1121
E72T/1	15' - 1"	1192
E72T/2	15' - 9"	1264
E72T/3	16' - 5"	1338
E72T/4	17' - 0 1/2"	1408
E72T/5	17' - 8 1/2"	1480
E72T/6	18' - 4 1/2"	1552
E78T	c [ft]	
E78T/0	15' - 9 1/2"	1337
E78T/1	16' - 5 1/2"	1415
E78T/2	17' - 1 1/2"	1493
E78T/3	17' - 9 1/2"	1571
E78T/4	18' - 5 1/2"	1649
E78T/5	19' - 1"	1727
E78T/6	19' - 9"	1805
E84T	c [ft]	
E84T/0	16' - 6 1/2"	1489
E84T/1	17' - 2 1/2"	1572
E84T/2	17' - 10"	1656
E84T/3	18' - 6"	1740
E84T/4	19' - 2"	1824
E84T/5	19' - 10"	1908
E84T/6	20' - 5 1/2"	1992
E84T/7	21' - 1 1/2"	2076

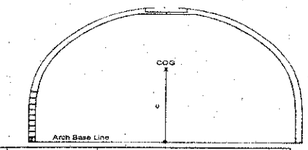

C30T	c [ft]	Waterway Area (SQ. FT.)
C30T/0	7' - 10 1/2"	261.4
C30T/1	8' - 6"	291
C30T/2	9' - 0 1/2"	320.8
C30T/3	9' - 8"	350.8
C30T/4	10' - 3"	380.8
C30T/5	10' - 10"	410.8
C30T/6	11' - 5"	440.8
C30T/7	12' - 0"	470.8
C36T	c [ft]	
C36T/0	9' - 10"	398.6
C36T/1	10' - 5"	434.3
C36T/2	11' - 0"	470.1
C36T/3	11' - 7 1/2"	506.1
C36T/4	12' - 2 1/2"	542.1
C36T/5	12' - 9 1/2"	578.1
C36T/6	13' - 4 1/2"	614.1
C36T/7	13' - 11 1/2"	650.1
C36T/8	14' - 6"	686.1
C36T/9	15' - 1"	722.1
C42T	c [ft]	
C42T/0	11' - 9"	564
C42T/1	12' - 4 1/2"	605.7
C42T/2	12' - 11 1/2"	647.6
C42T/3	13' - 6 1/2"	689.6
C42T/4	14' - 1 1/2"	731.6
C42T/5	14' - 8 1/2"	773.6
C42T/6	15' - 3 1/2"	815.6
C42T/7	15' - 10 1/2"	857.6
C42T/8	16' - 5 1/2"	899.6
C42T/9	17' - 0 1/2"	941.6

The waterway area shown is the total square foot opening for the selected structure. Consult the Bebo fabricator for other areas as may be required.

The Bebo manufacturer will provide a hydraulic analysis of the structure.

Standard design fill heights for all Bebo Arches are:

1'-6" min. to 15'-0" max.

Designs for other fill heights are allowable with a custom design furnished by the Bebo System fabricator.

COG is Center of Gravity

JAN 6 1 2000

BEBO ARCH SYSTEM
514 TOWNSHIP LINE ROAD
TELFORD, PA 18969
PHONE: 215-257-8081
FAX: 215-453-1671

BEBO ARCH PRECAST STRUCTURE
DESIGN & CONSTRUCTION SPECIFICATIONS
(ENGLISH UNITS)

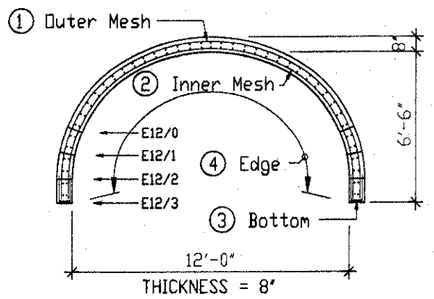

BEBO E12

Welded Wire Fabric							
Sheet No.	Circumferential Area Required [in2/ft]	Longitudinal Area Required [in2/ft]	Shape	E12/0 Length [ft]	E12/1 Length [ft]	E12/2 Length [ft]	E12/3 Length [ft]
1	0.36	0.24		14'-10"	17'- 2"	19'- 4"	21'- 4"
2	0.72	0.24		14'- 0"	16'- 1"	18'- 2"	20'- 2"
3	0.36	-		3'- 0"	3'- 0"	3'- 0"	3'- 0"
4	-	0.24		3'- 0"	3'- 0"	3'- 0"	3'- 0"

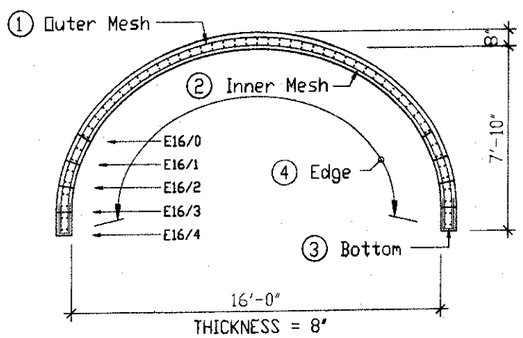

BEBO E16

Welded Wire Fabric								
Sheet No.	Circumferential Area Required [in2/ft]	Longitudinal Area Required [in2/ft]	Shape	E16/0 Length [ft]	E16/1 Length [ft]	E16/2 Length [ft]	E16/3 Length [ft]	E16/4 Length [ft]
1	0.36	0.24		17'-10"	20'- 2"	22'- 5"	24'- 7"	26'- 7"
2	0.72	0.24		17'- 0"	19'- 3"	21'- 5"	23'- 5"	25'- 5"
3	0.36	-		3'- 0"	3'- 0"	3'- 0"	3'- 0"	3'- 0"
4	-	0.24		3'- 0"	3'- 0"	3'- 0"	3'- 0"	3'- 0"

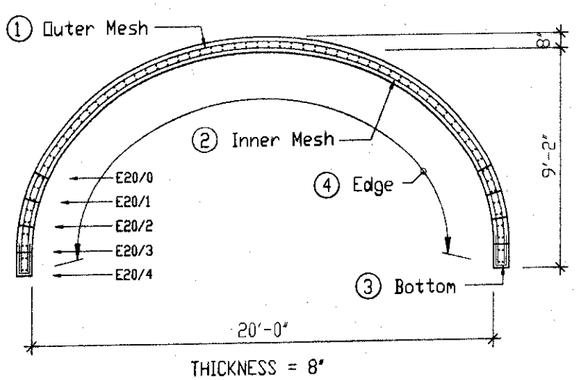

BEBO E20

Welded Wire Fabric								
Sheet No.	Circumferential Area Required [in2/ft]	Longitudinal Area Required [in2/ft]	Shape	E20/0 Length [ft]	E20/1 Length [ft]	E20/2 Length [ft]	E20/3 Length [ft]	E20/4 Length [ft]
1	0.36	0.24		23'- 3"	25'- 6"	27'- 9"	29'-11"	31'-11"
2	0.72	0.24		22'- 5"	24'- 8"	26'- 9"	28'- 9"	30'- 9"
3	0.36	-		3'- 0"	3'- 0"	3'- 0"	3'- 0"	3'- 0"
4	-	0.24		3'- 0"	3'- 0"	3'- 0"	3'- 0"	3'- 0"

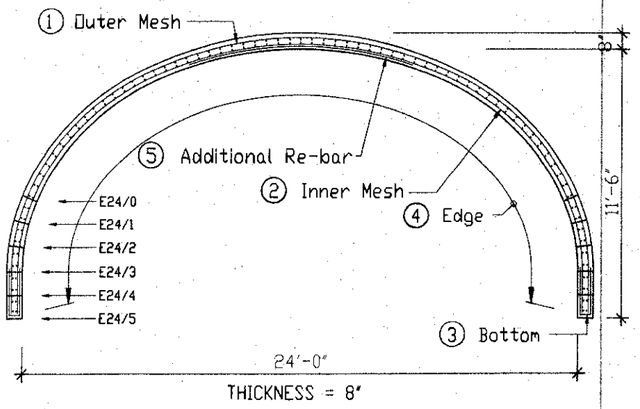

BEBO E24

Welded Wire Fabric									
Sheet No.	Circumferential Area Required [in2/ft]	Longitudinal Area Required [in2/ft]	Shape	E24/0 Length [ft]	E24/1 Length [ft]	E24/2 Length [ft]	E24/3 Length [ft]	E24/4 Length [ft]	E24/5 Length [ft]
1	0.36	0.24		28'- 7"	30'-10"	33'- 1"	35'- 2"	37'- 2"	39'- 2"
2	0.72	0.24		27'-10"	30'- 0"	32'- 1"	34'- 1"	36'- 1"	38'- 1"
3	0.36	-		3'- 0"	3'- 0"	3'- 0"	3'- 0"	3'- 0"	3'- 0"
4	-	0.24		3'- 0"	3'- 0"	3'- 0"	3'- 0"	3'- 0"	3'- 0"
Additional Re-bar									
Bar No.	Area Required [in2/ft]		Shape	E24/0 Length [ft]	E24/1 Length [ft]	E24/2 Length [ft]	E24/3 Length [ft]	E24/4 Length [ft]	E24/5 Length [ft]
5	0.11			9'- 9"	9'- 9"	9'- 9"	9'- 9"	9'- 9"	9'- 9"

JAN 8 1 2003

BEBO ARCH SYSTEM
514 TOWNSHIP LINE ROAD
TELFORD, PA 18969
PHONE: 215-257-8081
FAX: 215-453-1671

BEBO ARCH PRECAST STRUCTURE
DESIGN & CONSTRUCTION SPECIFICATIONS
(ENGLISH UNITS)

PADOT DWG. # 98-211 PE

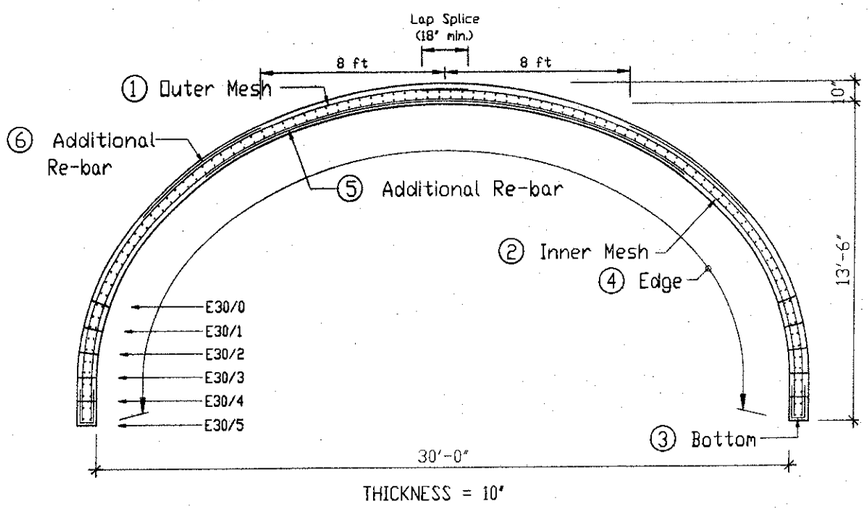

BEBO E30

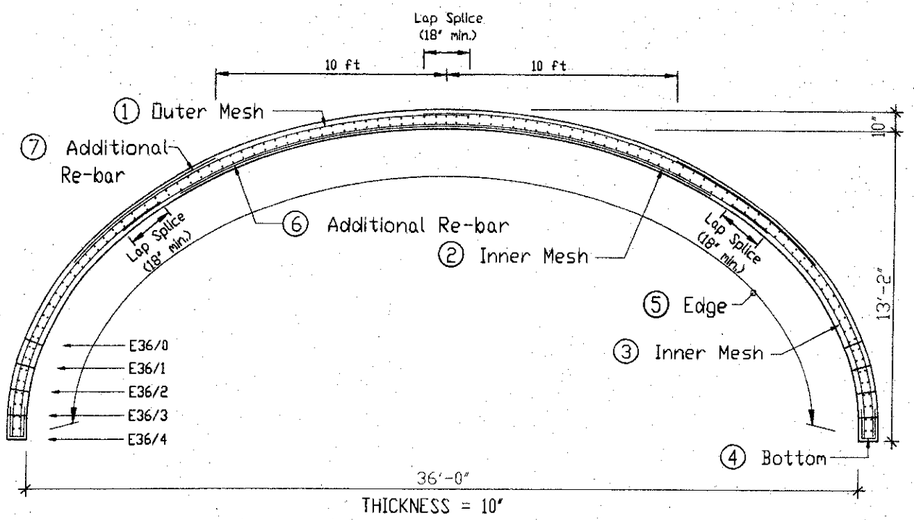

BEBO E30

Welded Wire Fabric									
Sheet No.	Circumferential Area Required [in2/ft]	Longitudinal Area Required [in2/ft]	Shape	E30/0 Length [ft]	E30/1 Length [ft]	E30/2 Length [ft]	E30/3 Length [ft]	E30/4 Length [ft]	E30/5 Length [ft]
1	0.42	0.24		19'- 5"	20'- 6"	21'- 7"	22'- 8"	23'- 8"	24'- 8"
2	0.42	0.24		35'- 9"	37'-11"	40'- 0"	42'- 0"	44'- 0"	46'- 0"
3	0.36	-		3'- 0"	3'- 0"	3'- 0"	3'- 0"	3'- 0"	3'- 0"
4	-	0.24		3'- 0"	3'- 0"	3'- 0"	3'- 0"	3'- 0"	3'- 0"
Additional Re-bar									
Bar No.	Area Required [in2/ft]		Shape	E30/0 Length [ft]	E30/1 Length [ft]	E30/2 Length [ft]	E30/3 Length [ft]	E30/4 Length [ft]	E30/5 Length [ft]
5	0.29			19'- 8"	19'- 8"	19'- 8"	19'- 8"	19'- 8"	19'- 8"
6	0.17			6'- 3"	6'- 3"	6'- 3"	6'- 3"	6'- 3"	6'- 3"

Note: No lap splices of inner mesh at arch crown

Welded Wire Fabric									
Sheet No.	Circumferential Area Required [in2/ft]	Longitudinal Area Required [in2/ft]	Shape	E36/0 Length [ft]	E36/1 Length [ft]	E36/2 Length [ft]	E36/3 Length [ft]	E36/4 Length [ft]	
1	0.42	0.24		25'- 4"	26'- 6"	27'- 7"	28'- 8"	29'- 8"	
2	0.42	0.24		30'- 0"	30'- 0"	30'- 0"	30'- 0"	30'- 0"	
3	0.42	0.24		8'- 8"	9'- 9"	10'-10"	11'-10"	12'-10"	
4	0.36	-		3'- 0"	3'- 0"	3'- 0"	3'- 0"	3'- 0"	
5	-	0.24		3'- 0"	3'- 0"	3'- 0"	3'- 0"	3'- 0"	
Additional Re-bar									
Bar No.	Area Required [in2/ft]		Shape	E36/0 Length [ft]	E36/1 Length [ft]	E36/2 Length [ft]	E36/3 Length [ft]	E36/4 Length [ft]	
6	0.46			27'- 6"	27'- 6"	27'- 6"	27'- 6"	27'- 6"	
7	0.17			7'- 6"	7'- 6"	7'- 6"	7'- 6"	7'- 6"	

Note: No lap splices of inner mesh at arch crown

JAN 3 1 2000

BEBO ARCH SYSTEM
514 TOWNSHIP LINE ROAD
TELFORD, PA 18969
PHONE: 215-257-8081
FAX: 215-453-1671

BEBO ARCH PRECAST STRUCTURE
DESIGN & CONSTRUCTION SPECIFICATIONS
(ENGLISH UNITS)

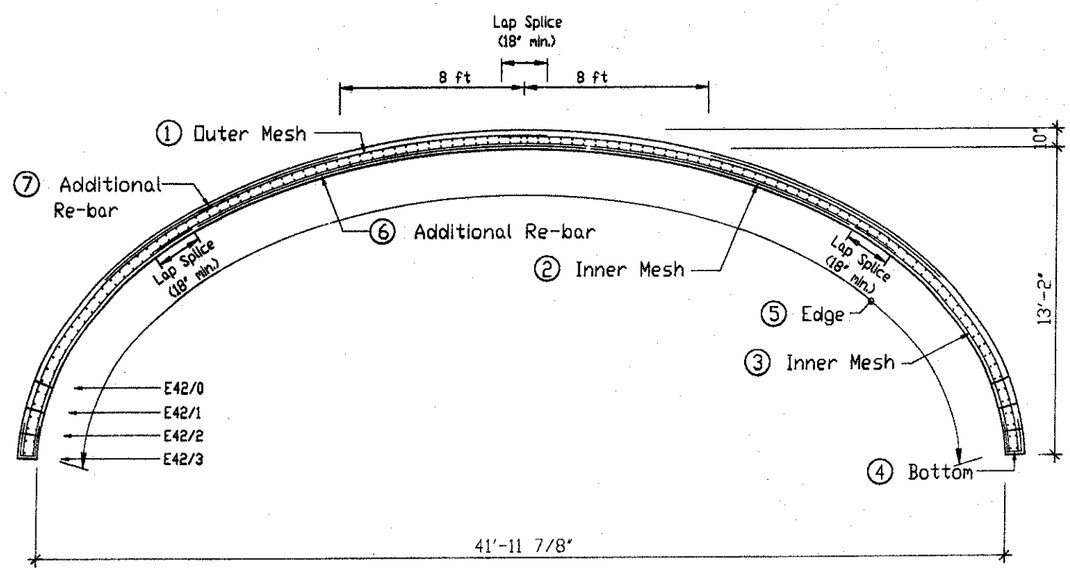

THICKNESS = 10"

BEBO E42

Welded Wire Fabric							
Sheet No.	Circumferential Area Required [in2/ft]	Longitudinal Area Required [in2/ft]	Shape	E42/0 Length [ft]	E42/1 Length [ft]	E42/2 Length [ft]	E42/3 Length [ft]
1	0.42	0.24		25'- 8"	26'- 9"	27'-10"	28'-11"
2	0.42	0.24		36'- 0"	36'- 0"	36'- 0"	36'- 0"
3	0.42	0.24		8'- 0"	9'- 0"	10'- 0"	11'- 0"
4	0.36	-		3'- 0"	3'- 0"	3'- 0"	3'- 0"
5	-	0.24		3'- 0"	3'- 0"	3'- 0"	3'- 0"

Additional Re-bar							
Bar No.	Area Required [in2/ft]		Shape	E42/0 Length [ft]	E42/1 Length [ft]	E42/2 Length [ft]	E42/3 Length [ft]
6	0.46			34'- 0"	34'- 0"	34'- 0"	34'- 0"
7	0.33			11'- 6"	11'- 6"	11'- 6"	11'- 6"

Note: No lap splices of inner mesh at arch crown

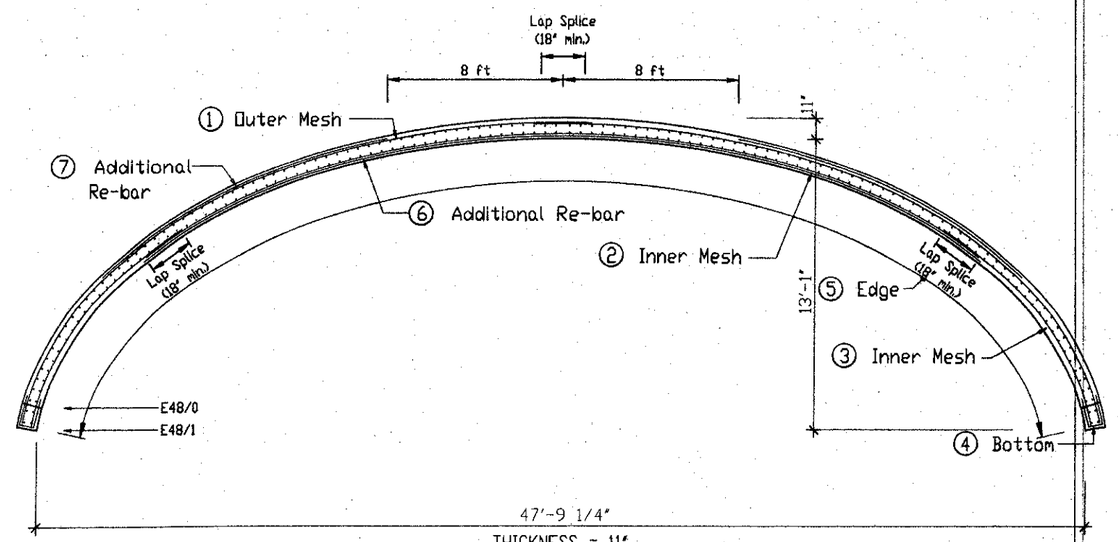

THICKNESS = 11"

BEBO E48

Welded Wire Fabric					
Sheet No.	Circumferential Area Required [in2/ft]	Longitudinal Area Required [in2/ft]	Shape	E48/0 Length [ft]	E48/1 Length [ft]
1	0.42	0.24		30'- 5"	31'- 6"
2	0.42	0.24		40'- 0"	40'- 0"
3	0.42	0.24		10'- 6"	11'- 6"
4	0.36	-		3'- 0"	3'- 0"
5	-	0.24		3'- 0"	3'- 0"

Additional Re-bar					
Bar No.	Area Required [in2/ft]		Shape	E48/0 Length [ft]	E48/1 Length [ft]
6	0.46			40'- 6"	40'- 6"
7	0.59			14'- 6"	14'- 6"

Note: No lap splices of inner mesh at arch crown

JAN 9 1 2000

BEBO ARCH SYSTEM
514 TOWNSHIP LINE ROAD
TELFORD, PA 18969
PHONE: 215-257-8081
FAX: 215-453-1671

BEBO ARCH PRECAST STRUCTURE
DESIGN & CONSTRUCTION SPECIFICATIONS
(ENGLISH UNITS)

PADOT DWG. # 98-211 PE

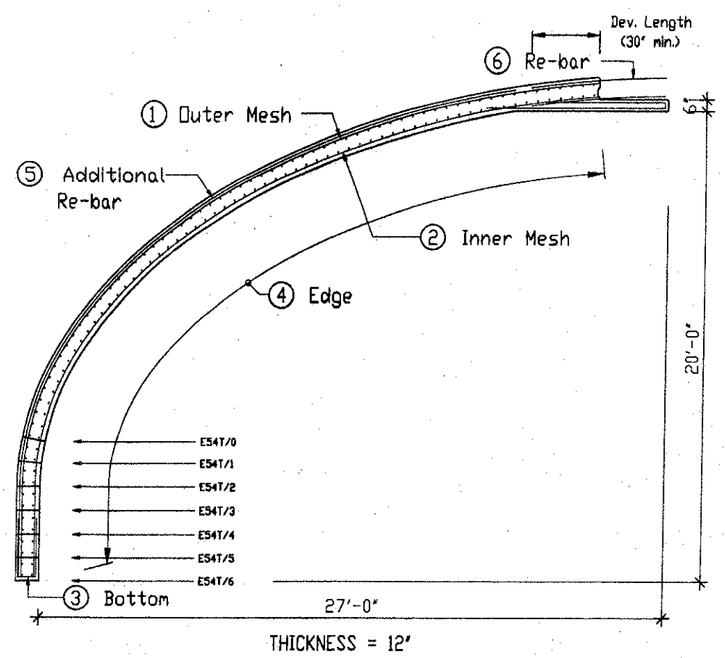

BEBO E54T

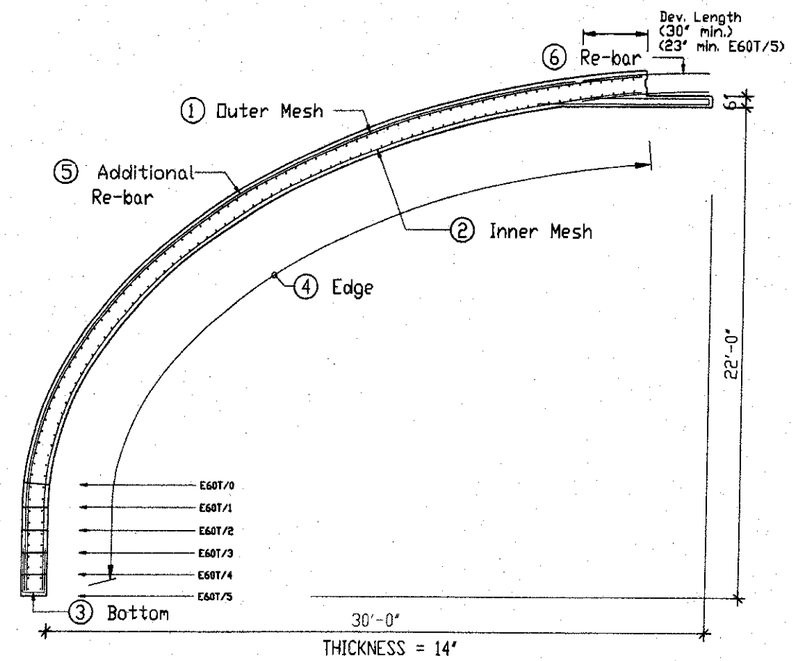

BEBO E60T

Welded Wire Fabric										
Sheet No.	Circumferential Area Required [in2/ft]	Longitudinal Area Required [in2/ft]	Shape	E54T/0 Length [ft]	E54T/1 Length [ft]	E54T/2 Length [ft]	E54T/3 Length [ft]	E54T/4 Length [ft]	E54T/5 Length [ft]	E54T/6 Length [ft]
1	0.72	0.24		30'- 6"	31'- 6"	32'- 7"	33'- 7"	34'- 7"	35'- 7"	36'- 7"
2	0.36	0.24		29'- 7"	30'- 8"	31'- 8"	32'- 8"	33'- 8"	34'- 8"	35'- 8"
3	0.36	-		3'- 4"	3'- 4"	3'- 4"	3'- 4"	3'- 4"	3'- 4"	3'- 4"
4	-	0.24		3'- 4"	3'- 4"	3'- 4"	3'- 4"	3'- 4"	3'- 4"	3'- 4"
Additional Re-bars										
Bar No.	Area Required [in2/ft]		Shape	E54T/0 Length [ft]	E54T/1 Length [ft]	E54T/2 Length [ft]	E54T/3 Length [ft]	E54T/4 Length [ft]	E54T/5 Length [ft]	E54T/6 Length [ft]
5	0.11			-	-	-	-	18'-11"	-	-
5	0.22			-	-	-	-	-	32'- 2"	-
5	0.29			-	-	-	-	-	-	33'- 2"
6	0.59			5'- 6"	5'- 6"	5'- 6"	5'- 6"	5'- 6"	5'- 6"	5'- 6"

Minimum steel requirements for bottom crown joint bar

Welded Wire Fabric									
Sheet No.	Circumferential Area Required [in2/ft]	Longitudinal Area Required [in2/ft]	Shape	E60T/0 Length [ft]	E60T/1 Length [ft]	E60T/2 Length [ft]	E60T/3 Length [ft]	E60T/4 Length [ft]	E60T/5 Length [ft]
1	0.72	0.24		35'- 7"	36'- 8"	37'- 8"	38'- 8"	39'- 8"	40'- 8"
2	0.36	0.24		34'- 6"	35'- 6"	36'- 6"	37'- 6"	38'- 6"	39'- 6"
3	0.36	-		3'- 4"	3'- 4"	3'- 4"	3'- 4"	3'- 4"	3'- 4"
4	-	0.24		3'- 4"	3'- 4"	3'- 4"	3'- 4"	3'- 4"	3'- 4"
Additional Re-bars									
Bar No.	Area Required [in2/ft]		Shape	E60T/0 Length [ft]	E60T/1 Length [ft]	E60T/2 Length [ft]	E60T/3 Length [ft]	E60T/4 Length [ft]	E60T/5 Length [ft]
5	0.11			-	21'-10"	-	-	-	-
5	0.13			-	-	24'- 0"	-	-	-
5	0.22			-	-	-	26'- 0"	-	-
5	0.33			-	-	-	-	37'-10"	-
5	0.39			-	-	-	-	-	38'-10"
6	0.59			5'- 6"	5'- 6"	5'- 6"	5'- 6"	5'- 6"	-
6	0.66			-	-	-	-	-	5'- 6"

Minimum steel requirements for bottom crown joint bar

JAN 3 1 2001

BEBO ARCH SYSTEM
514 TOWNSHIP LINE ROAD
TELFORD, PA 18969
PHONE: 215-257-8081
FAX: 215-453-1671

BEBO ARCH PRECAST STRUCTURE
DESIGN & CONSTRUCTION SPECIFICATIONS
(ENGLISH UNITS)

PADOT DWG. # 98-211 PE

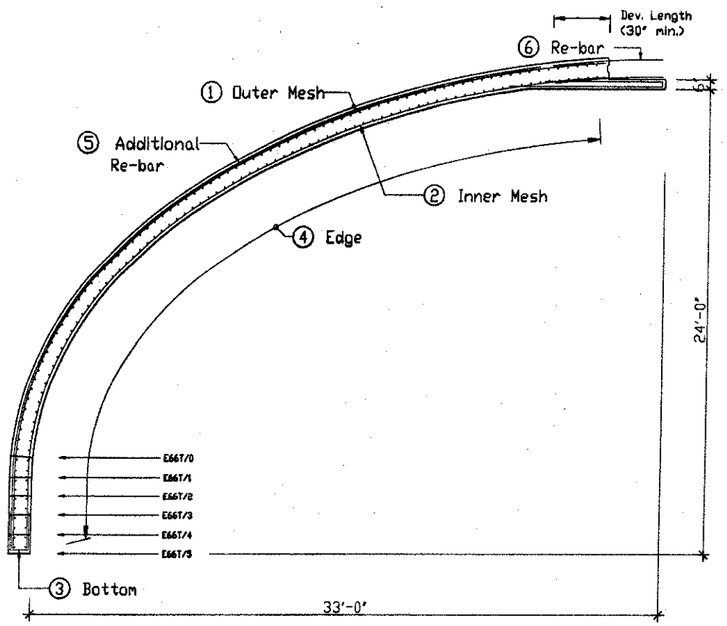

THICKNESS = 14"

BEBO E66T

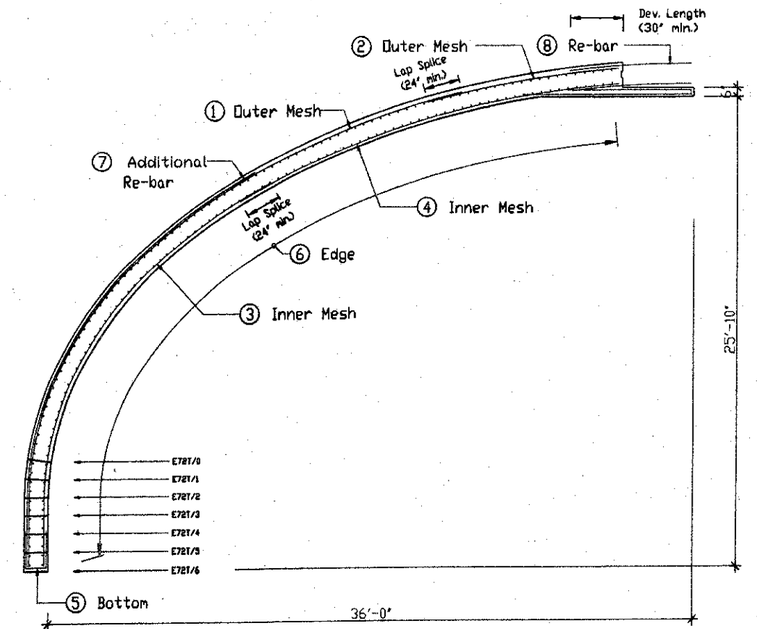

THICKNESS = 16"

BEBO E72T

Welded Wire Fabric									
Sheet No.	Circumferential Area Required [in2/ft]	Longitudinal Area Required [in2/ft]	Shape	E66T/0 Length [ft]	E66T/1 Length [ft]	E66T/2 Length [ft]	E66T/3 Length [ft]	E66T/4 Length [ft]	E66T/5 Length [ft]
1	0.96	0.24		39'- 8"	40'- 8"	41'- 8"	42'- 8"	43'- 8"	44'- 8"
2	0.36	0.24		38'- 6"	39'- 6"	40'- 6"	41'- 6"	42'- 6"	43'- 6"
3	0.36	-		3'- 4"	3'- 4"	3'- 4"	3'- 4"	3'- 4"	3'- 4"
4	-	0.24		3'- 4"	3'- 4"	3'- 4"	3'- 4"	3'- 4"	3'- 4"
Additional Re-bars									
Bar No.	Area Required [in2/ft]		Shape	E66T/0 Length [ft]	E66T/1 Length [ft]	E66T/2 Length [ft]	E66T/3 Length [ft]	E66T/4 Length [ft]	E66T/5 Length [ft]
5	0.11			-	-	21'- 0"	-	-	-
5	0.20			-	-	-	24'- 0"	-	-
5	0.29			-	-	-	-	41'- 0"	-
5	0.39			-	-	-	-	-	42'- 0"
6	1.18			5'- 6"	5'- 6"	5'- 6"	5'- 6"	5'- 6"	5'- 6"

Minimum steel requirements for bottom crown joint bar

Welded Wire Fabric											
Sheet No.	Circumferential Area Required [in2/ft]	Longitudinal Area Required [in2/ft]	Shape	E72T/0 Length [ft]	E72T/1 Length [ft]	E72T/2 Length [ft]	E72T/3 Length [ft]	E72T/4 Length [ft]	E72T/5 Length [ft]	E72T/6 Length [ft]
1	1.32	0.24		32'- 8"	33'- 8"	34'- 8"	35'- 8"	36'- 8"	37'- 8"	38'- 8"
2	1.32	0.24		11'- 0"	11'- 0"	11'- 0"	11'- 0"	11'- 0"	11'- 0"	11'- 0"
3	0.42	0.24		20'- 2"	21'- 2"	22'- 2"	23'- 2"	24'- 2"	25'- 2"	26'- 2"
4	0.42	0.24		22'- 4"	22'- 4"	22'- 4"	22'- 4"	22'- 4"	22'- 4"	22'- 4"
5	0.36	-		3'- 6"	3'- 6"	3'- 6"	3'- 6"	3'- 6"	3'- 6"	3'- 6"
6	-	0.24		3'- 6"	3'- 6"	3'- 6"	3'- 6"	3'- 6"	3'- 6"	3'- 6"
Additional Re-bars										
Bar No.	Area Required [in2/ft]		Shape	E72T/0 Length [ft]	E72T/1 Length [ft]	E72T/2 Length [ft]	E72T/3 Length [ft]	E72T/4 Length [ft]	E72T/5 Length [ft]	E72T/6 Length [ft]
7	0.11			-	-	-	-	-	22'- 0"	-
7	0.20			-	-	-	-	-	-	27'- 0"
8	1.18			6'- 6"	6'- 6"	6'- 6"	6'- 6"	6'- 6"	6'- 6"	6'- 6"

Minimum steel requirement for bottom crown joint bar

JAN 8 1 2000

BEBO ARCH SYSTEM
514 TOWNSHIP LINE ROAD
TELFORD, PA 18969
PHONE: 215-257-8081
FAX: 215-453-1671

BEBO ARCH PRECAST STRUCTURE
DESIGN & CONSTRUCTION SPECIFICATIONS
(ENGLISH UNITS)

PADOT DWG. # 98-211 PE

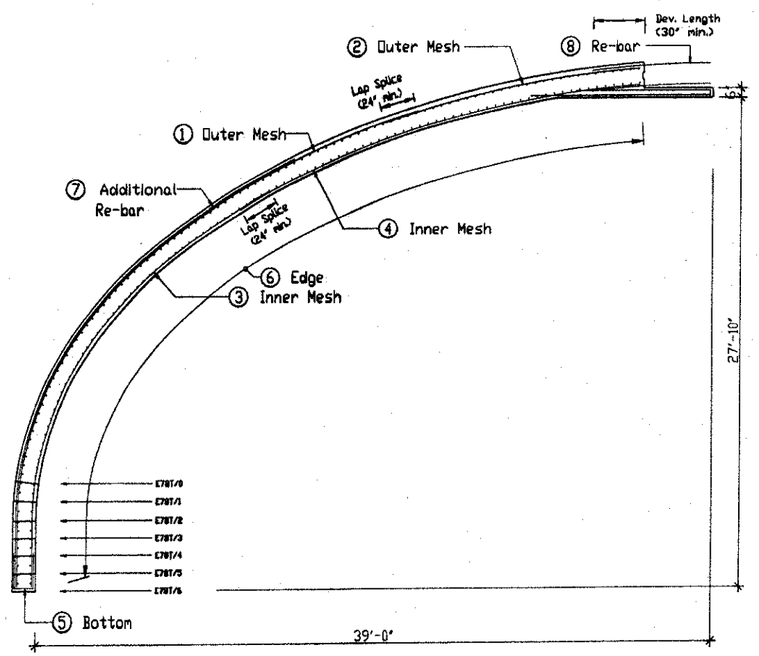

THICKNESS = 16"

BEBO E78T

Welded Wire Fabric											
Sheet No.	Circumferential Area Required [in2/ft]	Longitudinal Area Required [in2/ft]	Shape	E78T/0 Length [ft]	E78T/1 Length [ft]	E78T/2 Length [ft]	E78T/3 Length [ft]	E78T/4 Length [ft]	E78T/5 Length [ft]	E78T/6 Length [ft]
1	1.32	0.24		32'- 9"	33'- 9"	34'- 9"	35'- 9"	36'- 9"	37'- 9"	38'- 9"
2	1.32	0.24		15'- 0"	15'- 0"	15'- 0"	15'- 0"	15'- 0"	15'- 0"	15'- 0"
3	0.42	0.24		22'- 4"	23'- 4"	24'- 4"	25'- 4"	26'- 4"	27'- 4"	28'- 4"
4	0.42	0.24		24'- 0"	24'- 0"	24'- 0"	24'- 0"	24'- 0"	24'- 0"	24'- 0"
5	0.36	-		3'- 6"	3'- 6"	3'- 6"	3'- 6"	3'- 6"	3'- 6"	3'- 6"
6	-	0.24		3'- 6"	3'- 6"	3'- 6"	3'- 6"	3'- 6"	3'- 6"	3'- 6"
Additional Re-bars										
Bar No.	Area Required [in2/ft]		Shape	E78T/0 Length [ft]	E78T/1 Length [ft]	E78T/2 Length [ft]	E78T/3 Length [ft]	E78T/4 Length [ft]	E78T/5 Length [ft]	E78T/6 Length [ft]
7	0.11			-	-	-	24'- 6"	-	-	-
7	0.20			-	-	-	-	27'- 6"	-	-
7	0.29			-	-	-	-	-	30'- 6"	-
7	0.39			-	-	-	-	-	-	31'- 6"
8	1.18			6'- 6"	6'- 6"	6'- 6"	6'- 6"	6'- 6"	6'- 6"	6'- 6"

Minimum steel requirement for bottom crown joint bar

Welded Wire Fabric											
Sheet No.	Circumferential Area Required [in2/ft]	Longitudinal Area Required [in2/ft]	Shape	E84T/0 Length [ft]	E84T/1 Length [ft]	E84T/2 Length [ft]	E84T/3 Length [ft]	E84T/4 Length [ft]	E84T/5 Length [ft]	E84T/6 Length [ft]	E84T/7 Length [ft]
1	1.32	0.24		36'- 0"	37'- 0"	38'- 0"	39'- 0"	40'- 0"	41'- 0"	42'- 0"	43'- 0"
2	1.32	0.24		15'- 0"	15'- 0"	15'- 0"	15'- 0"	15'- 0"	15'- 0"	15'- 0"	15'- 0"
3	0.42	0.24		23'- 0"	24'- 0"	25'- 0"	26'- 0"	27'- 0"	28'- 0"	29'- 0"	30'- 0"
4	0.42	0.24		26'- 4"	26'- 4"	26'- 4"	26'- 4"	26'- 4"	26'- 4"	26'- 4"	26'- 4"
5	0.36	-		3'- 6"	3'- 6"	3'- 6"	3'- 6"	3'- 6"	3'- 6"	3'- 6"	3'- 6"
6	-	0.24		3'- 6"	3'- 6"	3'- 6"	3'- 6"	3'- 6"	3'- 6"	3'- 6"	3'- 6"
Additional Re-bars											
Bar No.	Area Required [in2/ft]		Shape	E84T/0 Length [ft]	E84T/1 Length [ft]	E84T/2 Length [ft]	E84T/3 Length [ft]	E84T/4 Length [ft]	E84T/5 Length [ft]	E84T/6 Length [ft]	E84T/7 Length [ft]
7	0.11			-	-	-	26'- 8"	-	-	-	-
7	0.24			-	-	-	-	29'- 8"	-	-	-
7	0.37			-	-	-	-	-	32'- 8"	-	-
7	0.46			-	-	-	-	-	-	33'- 8"	-
7	0.59			-	-	-	-	-	-	-	36'- 8"
6	1.18			6'- 6"	6'- 6"	6'- 6"	6'- 6"	6'- 6"	6'- 6"	6'- 6"	6'- 6"

Minimum steel requirement for bottom crown joint bar

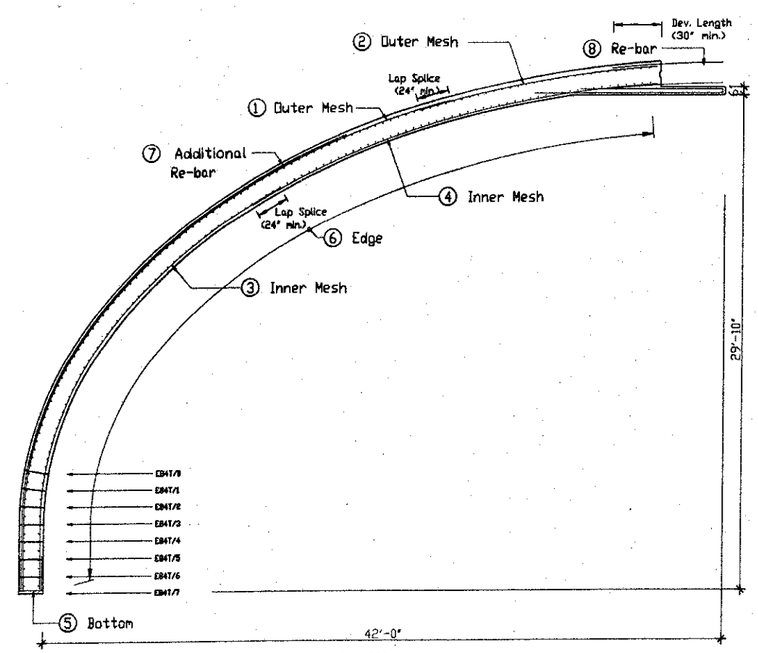

THICKNESS = 18"

BEBO E84T

JAN 8 1 2000

△		
△		
△		

BEBO ARCH SYSTEM

514 TOWNSHIP LINE ROAD
TELFORD, PA 18969
PHONE: 215-257-8081
FAX: 215-453-1671

BEBO ARCH PRECAST STRUCTURE
DESIGN & CONSTRUCTION SPECIFICATIONS
(ENGLISH UNITS)

PADOT DWG. # 98-211 PE

SHEET 11 OF 13

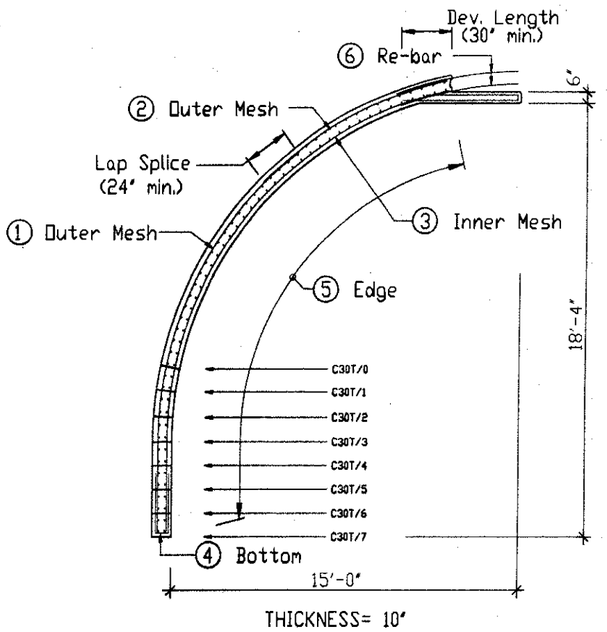

THICKNESS= 10"

BEBO C30T

Welded Wire Fabric													
Sheet No.	Circumferential Area Required [in2/ft]	Longitudinal Area Required [in2/ft]	Shape	C30T/0 Length [ft]	C30T/1 Length [ft]	C30T/2 Length [ft]	C30T/3 Length [ft]	C30T/4 Length [ft]	C30T/5 Length [ft]	C30T/6 Length [ft]	C30T/7 Length [ft]		
1	0.36	0.24		18'- 4"	19'- 4"	15'- 2"	16'- 2"	15'- 2"	16'- 2"	17'- 2"	9'- 0"		
2	0.72	0.24		-	-	7'- 2"	7'- 2"	9'- 2"	9'- 2"	9'- 2"	18'- 4"		
3	0.36	0.24		17'- 7"	18'- 7"	19'- 7"	20'- 7"	21'- 7"	22'- 7"	23'- 7"	24'- 7"		
4	0.36	-		3'- 2"	3'- 2"	3'- 2"	3'- 2"	3'- 2"	3'- 2"	3'- 2"	3'- 2"		
5	-	0.24		3'- 2"	3'- 2"	3'- 2"	3'- 2"	3'- 2"	3'- 2"	3'- 2"	3'- 2"		
Additional Re-bars													
Bar No.	Area Required [in2/ft]		Shape	C30T/0 Length [ft]	C30T/1 Length [ft]	C30T/2 Length [ft]	C30T/3 Length [ft]	C30T/4 Length [ft]	C30T/5 Length [ft]	C30T/6 Length [ft]	C30T/7 Length [ft]		
6	0.59			5'- 6"	5'- 6"	5'- 6"	5'- 6"	5'- 6"	5'- 6"	5'- 6"	5'- 6"		

Welded Wire Fabric													
Sheet No.	Circumferential Area Required [in2/ft]	Longitudinal Area Required [in2/ft]	Shape	C36T/0 Length [ft]	C36T/1 Length [ft]	C36T/2 Length [ft]	C36T/3 Length [ft]	C36T/4 Length [ft]	C36T/5 Length [ft]	C36T/6 Length [ft]	C36T/7 Length [ft]	C36T/8 Length [ft]	C36T/9 Length [ft]
1	0.72	0.24		23'- 2"	24'- 2"	25'- 2"	26'- 2"	27'- 2"	28'- 2"	26'- 3"	24'- 3"	25'- 3"	24'- 3"
2	0.96	0.24		-	-	-	-	-	-	5'- 0"	8'- 0"	8'- 0"	10'- 0 "
3	0.36	0.24		22'- 4"	23'- 4"	24'- 4"	25'- 4"	26'- 4"	27'- 4"	28'- 4"	29'- 4"	30'- 4"	31'- 4"
4	0.36	-		3'- 2"	3'- 2"	3'- 2"	3'- 2"	3'- 2"	3'- 2"	3'- 2"	3'- 2"	3'- 2"	3'- 2"
5	-	0.24		3'- 2"	3'- 2"	3'- 2"	3'- 2"	3'- 2"	3'- 2"	3'- 2"	3'- 2"	3'- 2"	3'- 2"
Additional Re-bars													
Bar No.	Area Required [in2/ft]		Shape	C36T/0 Length [ft]	C36T/1 Length [ft]	C36T/2 Length [ft]	C36T/3 Length [ft]	C36T/4 Length [ft]	C36T/5 Length [ft]	C36T/6 Length [ft]	C36T/7 Length [ft]	C36T/8 Length [ft]	C36T/9 Length [ft]
6	0.58			5'- 6"	5'- 6"	5'- 6"	5'- 6"	5'- 6"	-	-	-	-	-
6	1.18			-	-	-	-	-	5'- 6"	5'- 6"	5'- 6"	5'- 6"	9'- 6"

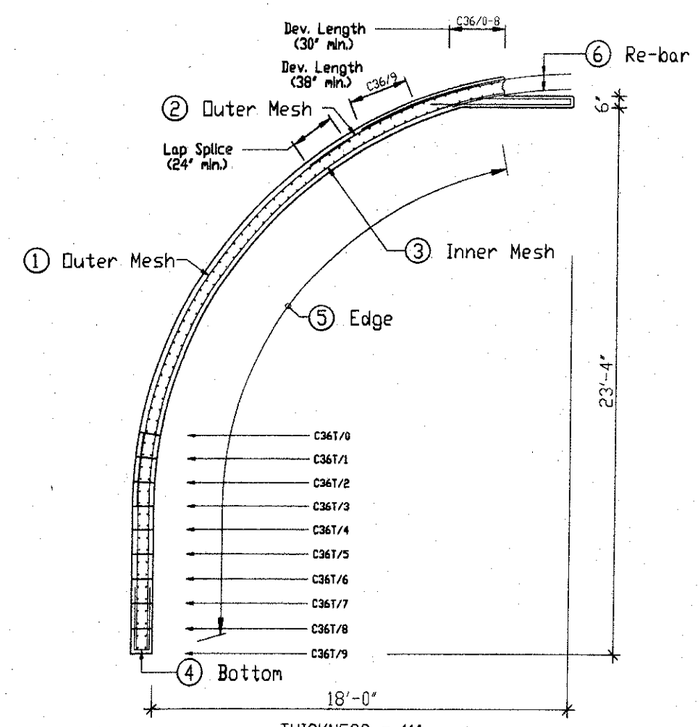

THICKNESS = 11"

BEBO C36T

JAN 9 1 2000

△		
△		
△		

BEBO ARCH SYSTEM
514 TOWNSHIP LINE ROAD
TELFORD, PA 18969
PHONE: 215-257-8081
FAX: 215-453-1671

BEBO ARCH PRECAST STRUCTURE
DESIGN & CONSTRUCTION SPECIFICATIONS
(ENGLISH UNITS)

PADOT DWG. # 98-211 PE

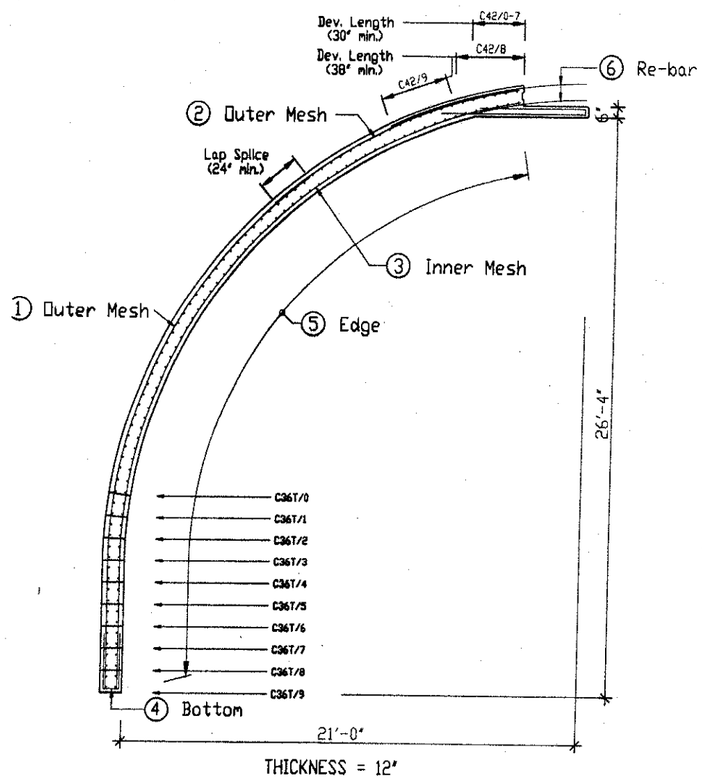

THICKNESS = 12"

BEBO C42T

SECTION A

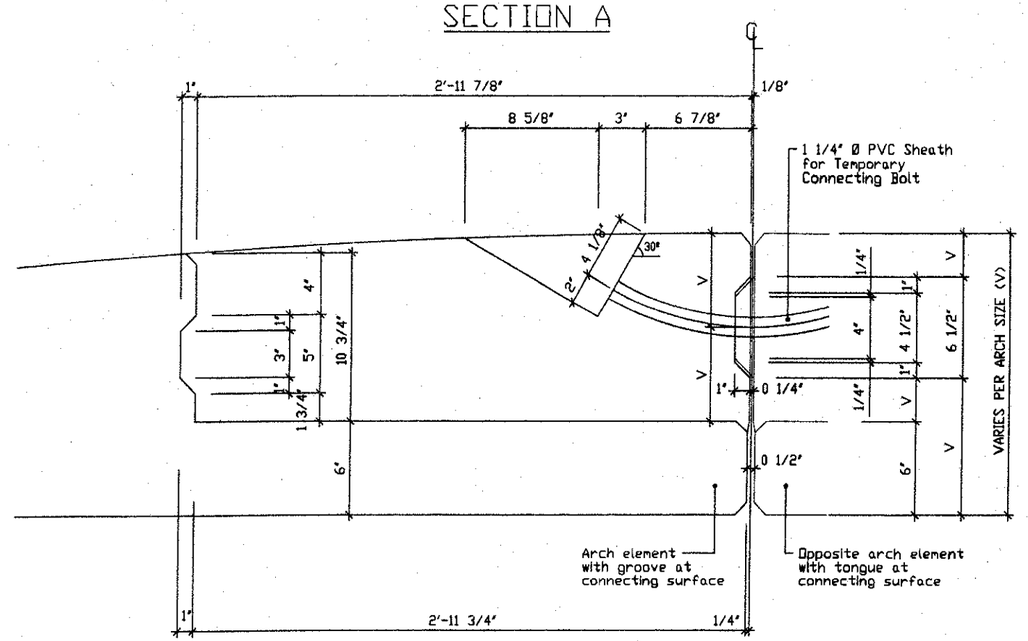

TOP VIEW CROWN JOINT

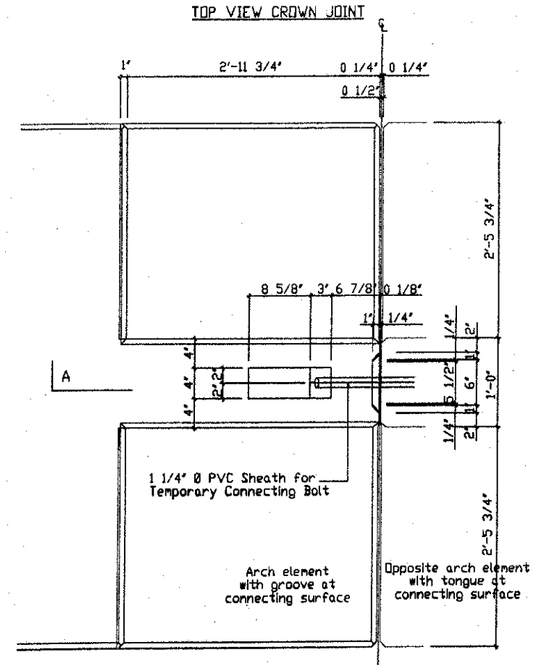

JAN 0 1 2003

Welded Wire Fabric													
Sheet No.	Circumferential Area Required [in2/ft]	Longitudinal Area Required [in2/ft]	Shape	C42T/0 Length [ft]	C42T/1 Length [ft]	C42T/2 Length [ft]	C42T/3 Length [ft]	C42T/4 Length [ft]	C42T/5 Length [ft]	C42T/6 Length [ft]	C42T/7 Length [ft]	C42T/8 Length [ft]	C42T/9 Length [ft]
1	0.72	0.24		27'-10"	28'-10"	29'-10"	26'- 8"	25'- 8"	26'- 8"	25'- 8"	26'- 8"	25'- 8"	26'- 8"
2	1.32	0.24		-	-	-	6'- 5"	8'- 5"	8'- 5"	10'- 5"	10'- 5"	12'- 5"	12'- 5"
3	0.36	0.24		27'- 0"	28'- 0"	29'- 0"	30'- 0"	31'- 0"	32'- 0"	33'- 0"	34'- 0"	35'- 0"	36'- 0"
4	0.36	-		3'- 4"	3'- 4"	3'- 4"	3'- 4"	3'- 4"	3'- 4"	3'- 4"	3'- 4"	3'- 4"	3'- 4"
5	-	0.24		3'- 4"	3'- 4"	3'- 4"	3'- 4"	3'- 4"	3'- 4"	3'- 4"	3'- 4"	3'- 4"	3'- 4"

Additional Re-bars													
Bar No.	Area Required [in2/ft]		Shape	C42T/0 Length [ft]	C42T/1 Length [ft]	C42T/2 Length [ft]	C42T/3 Length [ft]	C42T/4 Length [ft]	C42T/5 Length [ft]	C42T/6 Length [ft]	C42T/7 Length [ft]	C42T/8 Length [ft]	C42T/9 Length [ft]
6	1.18			5'- 6"	5'- 6"	5'- 6"	5'- 6"	5'- 6"	5'- 6"	5'- 6"	5'- 6"	-	-
6	1.84			-	-	-	-	-	-	-	-	6'- 2"	9'- 5"

BEBO ARCH SYSTEM
514 TOWNSHIP LINE ROAD
TELFORD, PA 18969
PHONE: 215-257-8081
FAX: 215-453-1671

BEBO ARCH PRECAST STRUCTURE
DESIGN & CONSTRUCTION SPECIFICATIONS
(ENGLISH UNITS)

PADOT DWG. # 98-211 PE

Product:

Pre–approved Shop Drawings
MSE Walls
Foster Geotechnical Retained
Earth Wall Panels (Square & Hexagon Panels)

Approval Date:

April 13, 2001

Initiated By SOL:

Not Applicable

Application/Use:

Standard Shop Drawings for MSE Wall Panels.

Specifications:

None

Standard Drawings:

Product Name	Drawing No.
Foster Geotechnical Retained Earth Walls	
Square Panel (Metric)	00-601-BQAD (M)
Square Panel (English)	00-601-BQAD
Hexagon Panel (Metric)	00-602-BQAD (M)
Hexagon Panel (English)	00-602-BQAD

Comment:

These drawings may be used as standard approved shop drawings and any panels types shown on these drawings may be produced without further checking or reviewing of the details presented in the drawings.

Panels type not shown on these drawings will require a separate shop drawing that must be submitted at the time of shop drawing submission for the entire wall on a project-by-project basis.

Having pre-approved shop drawings for most panels encountered in MSE Walls should drastically reduce review time and any

required review for special panels can easily be accomplished “In house”.

The Department’s Specifications, Section 107.03 of Publication 408 is applicable on all projects for the use of these panels.

The FHWA’s approval has been secured for these panels. These panels must be fabricated in approved P/C plants.

The following approved products (Shop Drawings) listed in the INDEX LIST are now **DELETED:**

<u>Product</u>

7.	MSE Wall-VSL Wall (Retained Earth Wall) New Square Panels
8.	Pre-approved Shop Drawings MSE Wall (Delete **only** Retained Earth Walls Panels - Drawing No. 94-602-BQAD)

PENNSYLVANIA
DEPARTMENT OF TRANSPORTATION
RECOMMENDED

Scott Christie

CHIEF BRIDGE ENGINEER

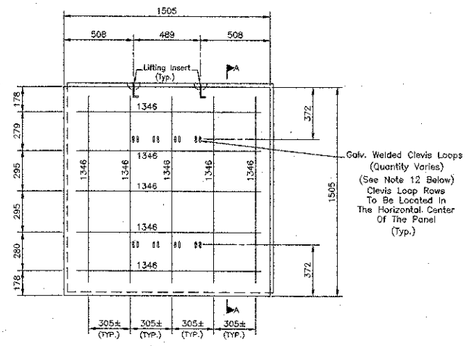

TYPE "4A"
(BACK FACE)

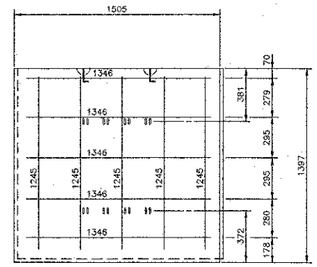

TYPE "4H55"
(BACK FACE)

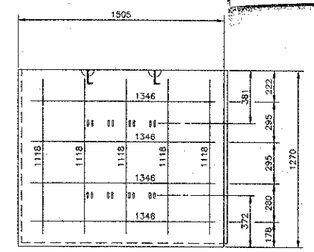

TYPE "4H50"
(BACK FACE)

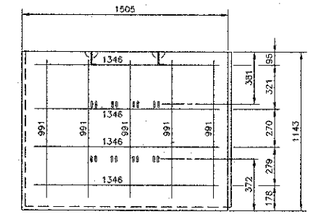

TYPE "4H45"
(BACK FACE)

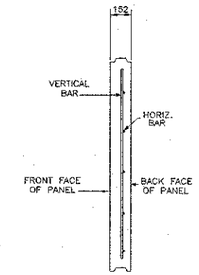

SECTION A–A

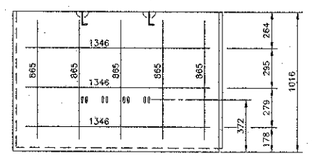

TYPE "4H40"
(BACK FACE)

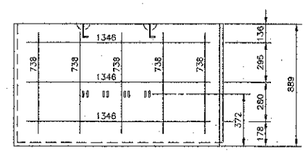

TYPE "4H35"
(BACK FACE)

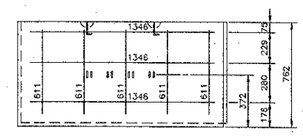

TYPE "4H30"
(BACK FACE)

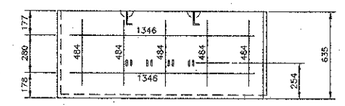

TYPE "4H25"
(BACK FACE)

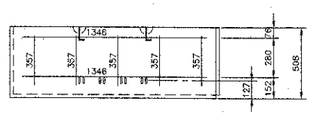

TYPE "4H20"
(BACK FACE)

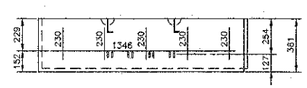

TYPE "4H15"
(BACK FACE)

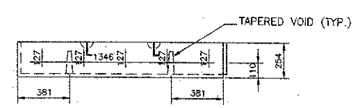

TYPE "H10"
(BACK FACE)

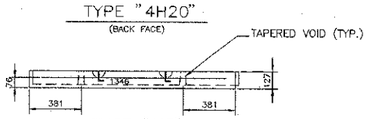

TYPE "H5"
(BACK FACE)

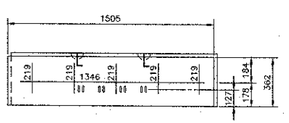

TYPE "4B15"
(BACK FACE)

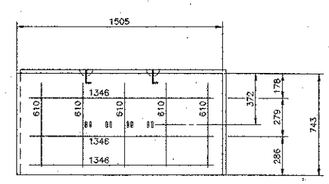

TYPE "4B30"
(BACK FACE)

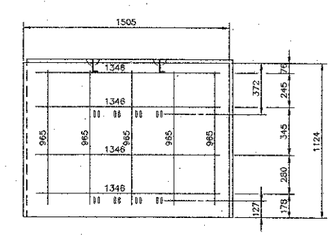

TYPE "4B45"
(BACK FACE)

NOTES:

1. ALL REINFORCING STEEL TO BE 13M BARS, (ASTM–A 615M–96a).
2. ALL REINFORCING STEEL TO BE GRADE 400, EPOXY COATED.
3. DIMENSIONS SHOWN ARE TO THE FRONT FACE UNLESS NOTED OTHERWISE.
4. HORIZONTAL BARS TO HAVE 50mm(MIN.),63mm(MAX.) CLEAR TO THE BACK FACE.
5. VERTICAL BARS TO HAVE 63mm(MIN.),75mm(MAX.) CLEAR TO THE BACK FACE.
6. ALL BARS TO HAVE 50mm MIN. CLEAR TO SIDES.
7. FOR LEFT END PANELS REMOVE THE 25mm VERTICAL MALE KEY FROM THE LEFT SIDE OF PANEL AS SEEN FROM THE FRONT FACE.
8. REINFORCEMENT LABELS INDICATE BAR SIZE AND LENGTH. EXAMPLE: 1346 IS A 13M BAR 1346mm LONG.
9. LIFTING INSERT AS SUGGESTED BY MANUFACTURER.
10. REFER TO BC–799 FOR PRECAST COPING REBAR DETAILS.
11. CONCRETE MINIMUM COMPRESSIVE STRENGTH AS SPECIFIED IN THE CONTRACT SPECIAL PROVISIONS.
12. PANEL TYPE IS DESIGNATED ON EACH PANEL ON THE WALL ELEVATION SHEET. PREFIX NUMBER INDICATES NUMBER OF CLEVIS LOOPS PER ROW. EXAMPLE: 5B30 IS A "B30" PANEL WITH FIVE (5) CLEVIS LOOPS PER ROW.
13. REINFORCEMENT EQUALLY SPACED UNLESS OTHERWISE INDICATED.
14. PANEL TOLERANCES IN ACCORDANCE WITH ACI 117.
15. FABRICATE IN ACCORDANCE WITH PUBLICATION 408 SECTION 714.
16. PROVIDE 10mm x 10mm MINIMUM CHAMFER ON ALL EXPOSED EDGES OF PANELS (FRONT FACE ONLY).

PA DOT DWG #00–601–BQAD (M)

APR 13 2001

PLANS PREPARED BY:

FOSTER-GEOTECHNICAL
A Division of L. B. Foster Company
1372 Old Bridge Rd., Suite 101, Woodbridge, VA 22192
Telephone: (703) 499-9818/ Fax: (703) 499-9348
SAN DIEGO, CA / WOODBRIDGE, VA / NORCROSS, GA

Foster Geotechnical claims a strict proprietary right in all drawings, specifications and calculations ("Information") set forth on this sheet. The use of such information in whole or in part, or any reproduction thereof, is restricted to the site for which it was prepared and to the material and/or service provided by Foster Geotechnical. Any other use is strictly prohibited, and Foster Geotechnical disclaims any LIABILITY THEREFOR.

REGISTERED PROFESSIONAL ENGINEER
JOHN A. NICHOLSON, JR.
92044-E
COMMONWEALTH OF PENNSYLVANIA

Commonwealth of Pennsylvania
DEPARTMENT OF TRANSPORTATION
BUREAU OF DESIGN

PREFABRICATED RETAINING WALL DETAILS
M.S.E. WALL: FOSTER GEOTECHNICAL RETAINED EARTH WALL
SQUARE PANEL
SHOP DRAWING (METRIC UNITS)

SHEET 1 OF 3

PANEL REINFORCEMENT (BACK FACE)

U.S. PATENT NUMBER 4,725,170

NOTE: "I HEREBY CERTIFY THAT ALL DESIGN ASSUMPTIONS HAVE BEEN VALIDATED EITHER THROUGH CONSTRUCTION DETAILS OR NOTES ON THESE DRAWINGS OR THROUGH THE CONTRACT PLANS AND PROVISIONS."

DESIGNED: LC
DRAWN: LC
CHECKED: MM

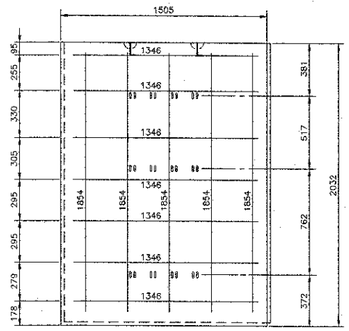

TYPE "4H80"
(BACK FACE)

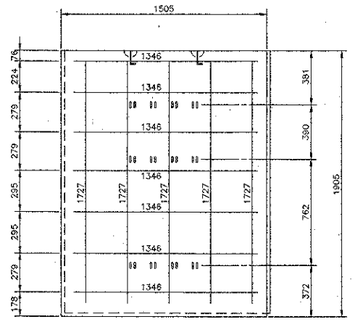

TYPE "4H75"
(BACK FACE)

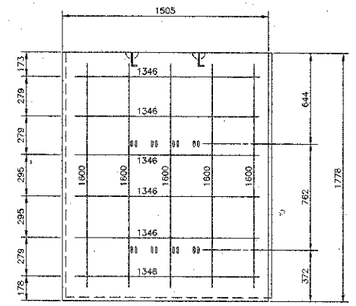

TYPE "4H70"
(BACK FACE)

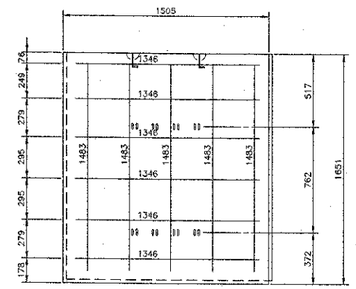

TYPE "4H65"
(BACK FACE)

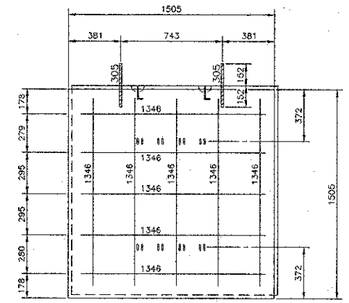

TYPE "4AT1"
(BACK FACE)

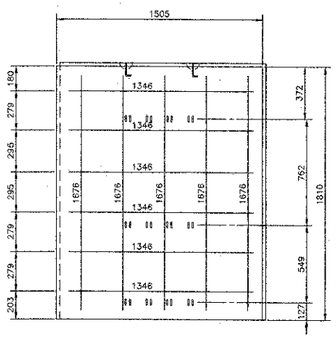

TYPE "4B72"
(BACK FACE)

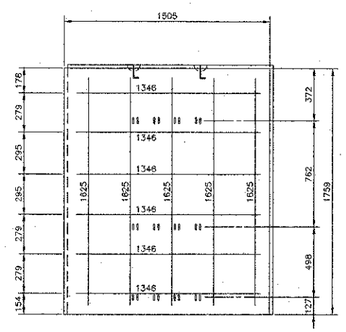

TYPE "4B70"
(BACK FACE)

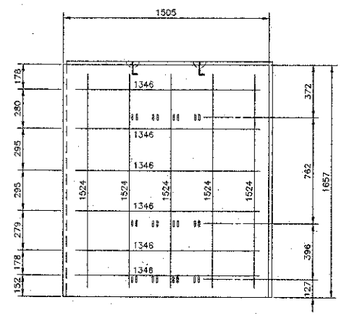

TYPE "4B66"
(BACK FACE)

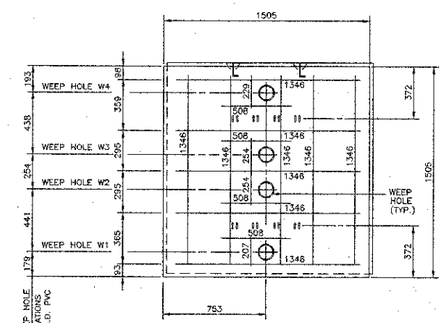

WEEP HOLE LOCATION DETAILS
STANDARD PANEL DESIGNATIONS ENDING WITH THE SUFFIX; W1,W2,W3 OR W4.
(BACK FACE)

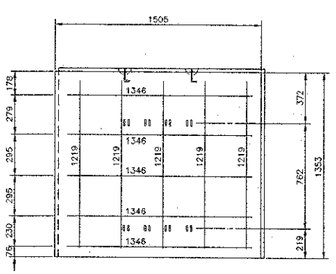

TYPE "4B54"
(BACK FACE)

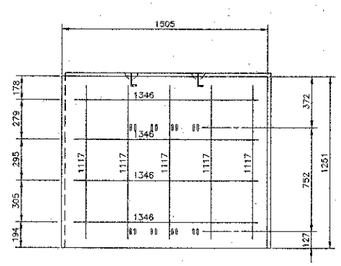

TYPE "4B50"
(BACK FACE)

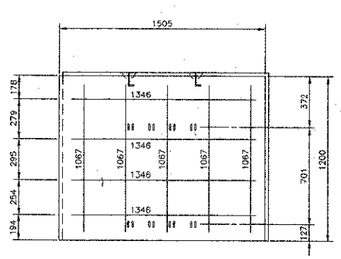

TYPE "4B48"
(BACK FACE)

APR 13 2001

PA DOT DWG #00-601-BQAD (M)

PLANS PREPARED BY:
FOSTER-GEOTECHNICAL
A Division of L. B. Foster Company
1372 Old Bridge Rd., Suite 101, Woodbridge, VA 22192
Telephone: (703) 499-9818/ Fax: (703) 499-9348
SAN DIEGO, CA / WOODBRIDGE, VA / NORCROSS, GA

Foster Geotechnical claims a strict proprietary right in all drawings, specifications and calculations ("information") set forth on this sheet. The use of such information in whole or in part, or any reproduction thereof, is restricted to the site for which it was prepared and to the material and/or service provided by Foster Geotechnical. Any other use is strictly prohibited, and Foster Geotechnical disclaims any LIABILITY THEREFOR.

COMMONWEALTH OF PENNSYLVANIA
REGISTERED PROFESSIONAL ENGINEER
JOHN A. NICHOLSON, JR.
No. 044446

Commonwealth of Pennsylvania
DEPARTMENT OF TRANSPORTATION
BUREAU OF DESIGN

PREFABRICATED RETAINING WALL DETAILS
M.S.E. WALL: FOSTER GEOTECHNICAL RETAINED EARTH WALL
SQUARE PANEL
SHOP DRAWING (METRIC UNITS)

SHEET 2 OF 3

PANEL REINFORCEMENT (BACK FACE)

U.S. PATENT NUMBER 4,725,170
NOTE: "I HEREBY CERTIFY THAT ALL DESIGN ASSUMPTIONS HAVE BEEN VALIDATED EITHER THROUGH CONSTRUCTION DETAILS OR NOTES ON THESE DRAWINGS OR THROUGH THE CONTRACT PLANS AND PROVISIONS."

DESIGNED: LC
DRAWN: LC
CHECKED: MM

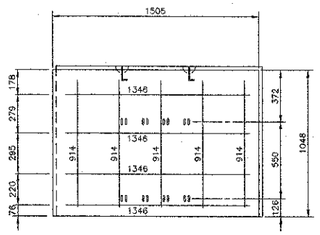

TYPE "4B42"
(BACK FACE)

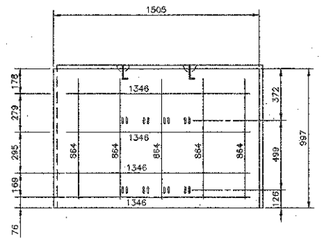

TYPE "4B40"
(BACK FACE)

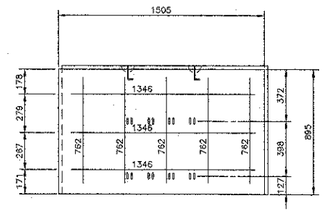

TYPE "4B36"
(BACK FACE)

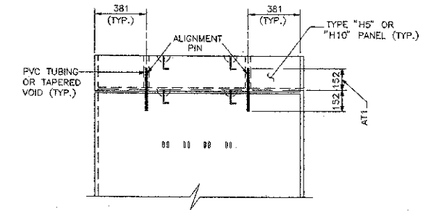

TYPE: "AT1" DETAIL
NOTE: TYPE "AT1" PANELS HAVE 2-305mm 13M BAR ALIGNMENT PINS.

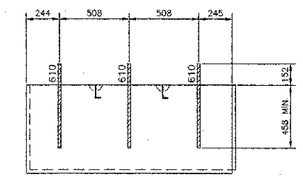

TYPE "T" PANEL DETAIL
(BACK FACE)

NOTE: ALL PANELS WITH A "T" SUFFIX REQUIRE 3-610mm 13M BARS EMBEDDED 458mm MINIMUM INTO PANEL, SPACED AS SHOWN ABOVE.

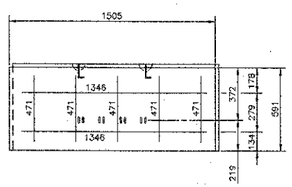

TYPE "4B24"
(BACK FACE)

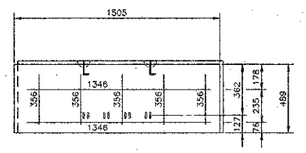

TYPE "4B20"
(BACK FACE)

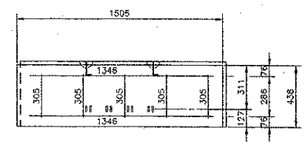

TYPE "4B18"
(BACK FACE)

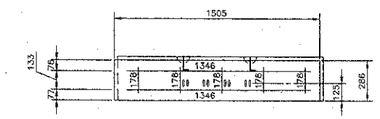

TYPE "4B12"
(BACK FACE)

APR 13 2001

PA DOT DWG #00-601-BQAD (M)

PLANS PREPARED BY:
FOSTER-GEOTECHNICAL
A Division of L. B. Foster Company
1372 Old Bridge Rd., Suite 101, Woodbridge, VA 22192
Telephone: (703) 499-9818/ Fax: (703) 499-9348
SAN DIEGO, CA / WOODBRIDGE, VA / NORCROSS, GA

Foster Geotechnical claims a strict proprietary right in all drawings, specifications and calculations ("information") set forth on this sheet. The use of such information in whole or in part, or any reproduction thereof, is restricted to the site for which it was prepared and to the material and/or service provided by Foster Geotechnical. Any other use is strictly prohibited, and Foster Geotechnical disclaims any LIABILITY THEREFOR.

REGISTERED PROFESSIONAL ENGINEER
JOHN A. NICHOLSON, JR.
PENNSYLVANIA

Commonwealth of Pennsylvania
DEPARTMENT OF TRANSPORTATION
BUREAU OF DESIGN

PREFABRICATED RETAINING WALL DETAILS
M.S.E. WALL: FOSTER GEOTECHNICAL RETAINED EARTH WALL
SQUARE PANEL
SHOP DRAWING (METRIC UNITS)

SHEET 3 OF 3

DESIGNED: LC
DRAWN: LC
CHECKED: MM

PANEL REINFORCEMENT (BACK FACE)

U.S. PATENT NUMBER 4,725,170
NOTE: "I HEREBY CERTIFY THAT ALL DESIGN ASSUMPTIONS HAVE BEEN VALIDATED EITHER THROUGH CONSTRUCTION DETAILS OR NOTES ON THESE DRAWINGS OR THROUGH THE CONTRACT PLANS AND PROVISIONS."

PENNSYLVANIA
DEPARTMENT OF TRANSPORTATION
RECOMMENDED

Scott Christie

CHIEF BRIDGE ENGINEER

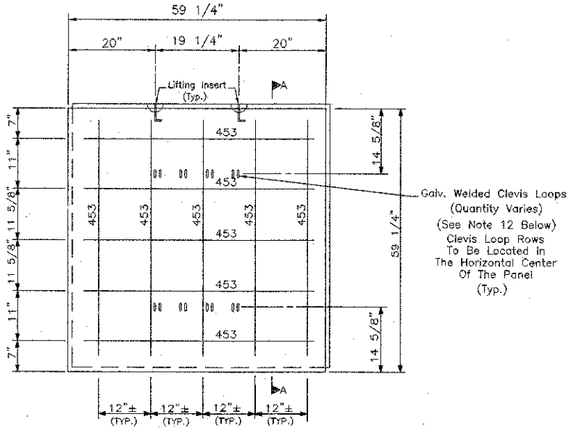

TYPE "4A"
(BACK FACE)

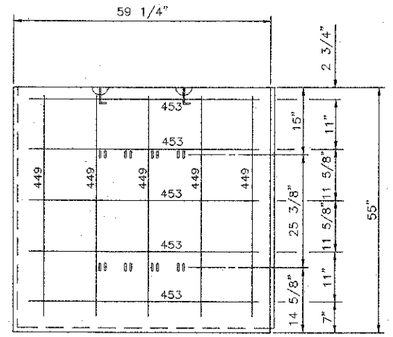

TYPE "4H55"
(BACK FACE)

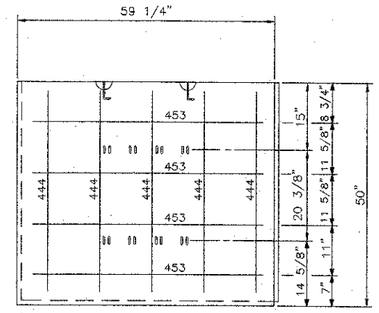

TYPE "4H50"
(BACK FACE)

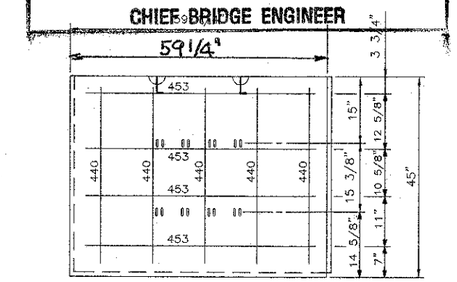

TYPE "4H45"
(BACK FACE)

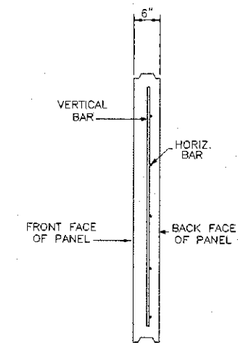

SECTION A–A

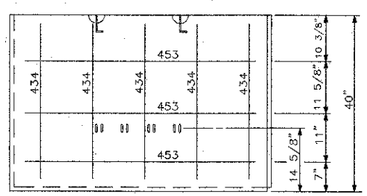

TYPE "4H40"
(BACK FACE)

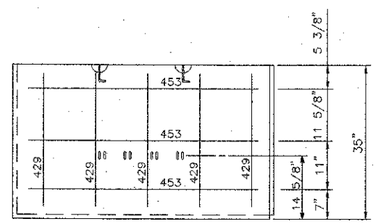

TYPE "4H35"
(BACK FACE)

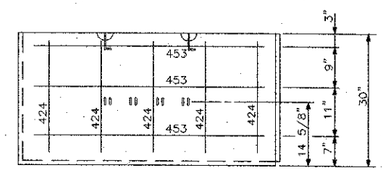

TYPE "4H30"
(BACK FACE)

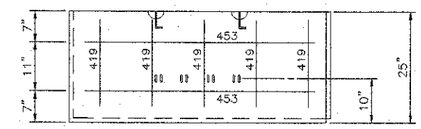

TYPE "4H25"
(BACK FACE)

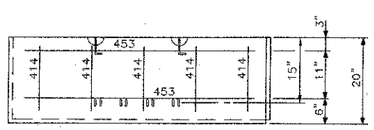

TYPE "4H20"
(BACK FACE)

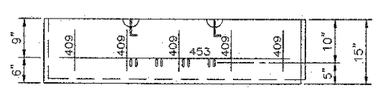

TYPE "4H15"
(BACK FACE)

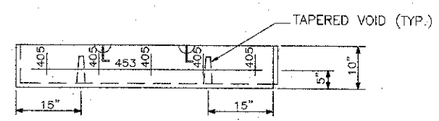

TYPE "H10"
(BACK FACE)

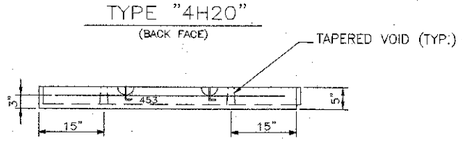

TYPE "H5"
(BACK FACE)

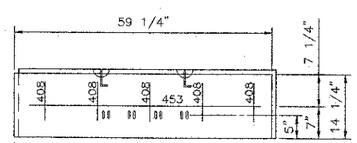

TYPE "4B15"
(BACK FACE)

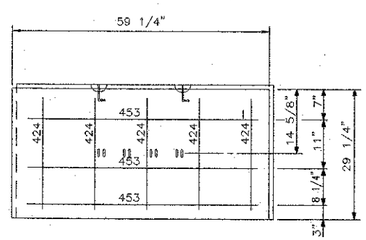

TYPE "4B30"
(BACK FACE)

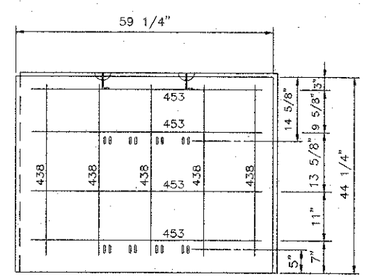

TYPE "4B45"
(BACK FACE)

PANEL REINFORCEMENT (BACK FACE)

U.S. PATENT NUMBER 4,725,170

NOTE: "I HEREBY CERTIFY THAT ALL DESIGN ASSUMPTIONS HAVE BEEN VALIDATED EITHER THROUGH CONSTRUCTION DETAILS OR NOTES ON THESE DRAWINGS OR THROUGH THE CONTRACT PLANS AND PROVISIONS."

APR 13 2001

PLANS PREPARED BY:
FOSTER-GEOTECHNICAL
A Division of L. B. Foster Company
1372 Old Bridge Rd., Suite 101, Woodbridge, VA 22192
Telephone: (703) 499-9818/ Fax: (703) 499-9348
SAN DIEGO, CA / WOODBRIDGE, VA / NORCROSS, GA

Foster Geotechnical claims a strict proprietary right in all drawings, specifications and calculations ("information") set forth on this sheet. The use of such information in whole or in part, or any reproduction thereof, is restricted to the site for which it was prepared and to the material and/or service provided by Foster Geotechnical. Any other use is strictly prohibited, and Foster Geotechnical disclaims any LIABILITY THEREFOR.

REGISTERED PROFESSIONAL ENGINEER JOSHUA A. NICHOLSON, JR. NO. 4

NOTES:

1. ALL REINFORCING STEEL TO BE #4 BARS, (ASTM–A615).
2. ALL REINFORCING STEEL TO BE GRADE 60, EPOXY COATED.
3. DIMENSIONS SHOWN ARE TO THE FRONT FACE UNLESS NOTED OTHERWISE.
4. HORIZONTAL BARS TO HAVE 2"(MIN.),2 1/2"(MAX.) CLEAR TO THE BACK FACE.
5. VERTICAL BARS TO HAVE 2 1/2"(MIN.),3"(MAX.) CLEAR TO THE BACK FACE.
6. ALL BARS TO HAVE 2" MIN. CLEAR TO SIDES.
7. FOR LEFT END PANELS REMOVE THE ONE INCH VERTICAL MALE KEY FROM THE LEFT SIDE OF PANEL AS SEEN FROM THE FRONT FACE.
8. REINFORCEMENT LABELS INDICATE BAR SIZE AND LENGTH. EXAMPLE: 453 IS A #4 BAR 53" LONG.
9. LIFTING INSERT AS SUGGESTED BY MANUFACTURER.
10. REFER TO BC–799 FOR PRECAST COPING REBAR DETAILS.
11. CONCRETE MINIMUM COMPRESSIVE STRENGTH AS SPECIFIED IN THE CONTRACT SPECIAL PROVISIONS.
12. PANEL TYPE IS DESIGNATED ON EACH PANEL ON THE WALL ELEVATION SHEET. PREFIX NUMBER INDICATES NUMBER OF CLEVIS LOOPS PER ROW. EXAMPLE: 5B30 IS A "B30" PANEL WITH FIVE (5) CLEVIS LOOPS PER ROW.
13. REINFORCEMENT EQUALLY SPACED UNLESS OTHERWISE INDICATED.
14. PANEL TOLERANCES IN ACCORDANCE WITH ACI 117.
15. FABRICATE IN ACCORDANCE WITH PUBLICATION 408 SECTION 714.
16. PROVIDE 3/8" x 3/8" MINIMUM CHAMFER ON ALL EXPOSED EDGES OF PANELS (FRONT FACE ONLY).

PA DOT DWG #00–601–BQAD

Commonwealth of Pennsylvania
DEPARTMENT OF TRANSPORTATION
BUREAU OF DESIGN

PREFABRICATED RETAINING WALL DETAILS
M.S.E. WALL: FOSTER GEOTECHNICAL RETAINED EARTH WALL
SQUARE PANEL
SHOP DRAWING (ENGLISH UNITS)

SHEET 1 OF 3

DESIGNED: LC
DRAWN: LC
CHECKED: MM

NV 1/TAN

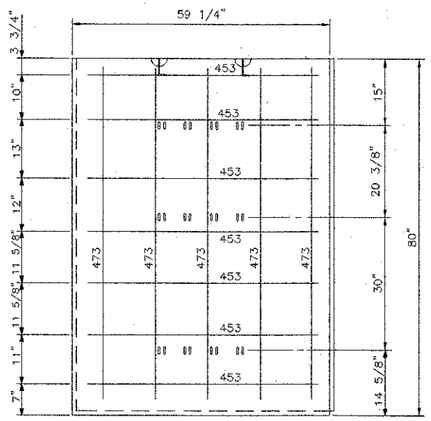

TYPE "4H80"
(BACK FACE)

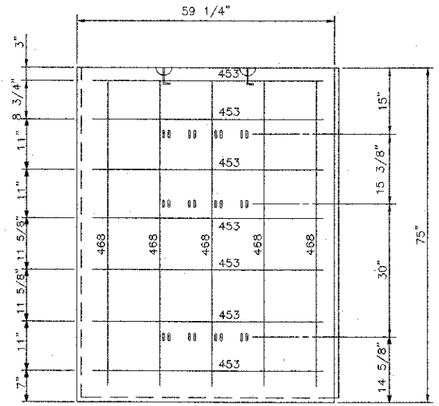

TYPE "4H75"
(BACK FACE)

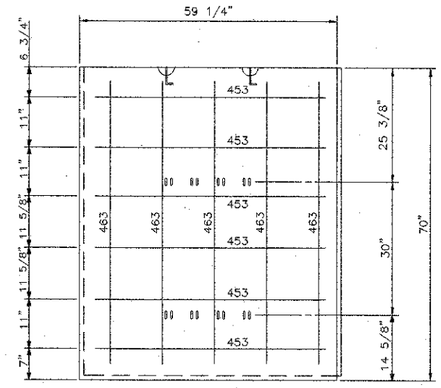

TYPE "4H70"
(BACK FACE)

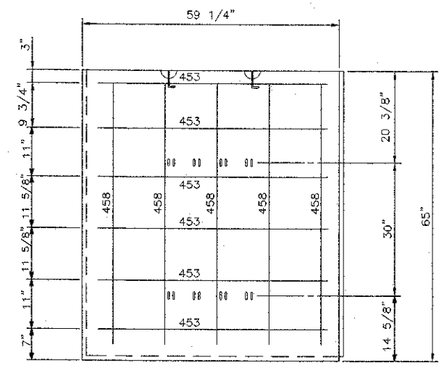

TYPE "4H65"
(BACK FACE)

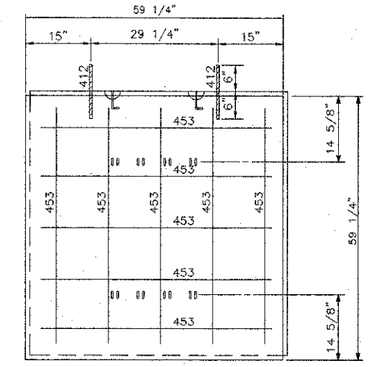

TYPE "4AT1"
(BACK FACE)

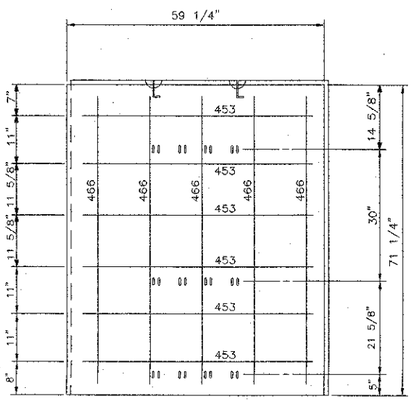

TYPE "4B72"
(BACK FACE)

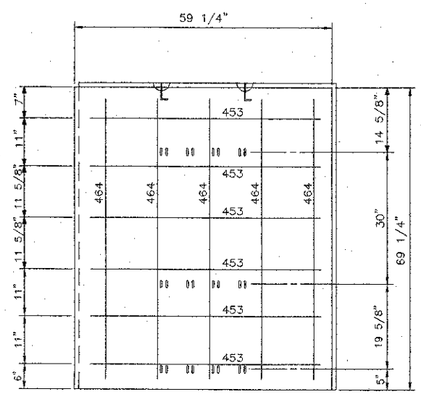

TYPE "4B70"
(BACK FACE)

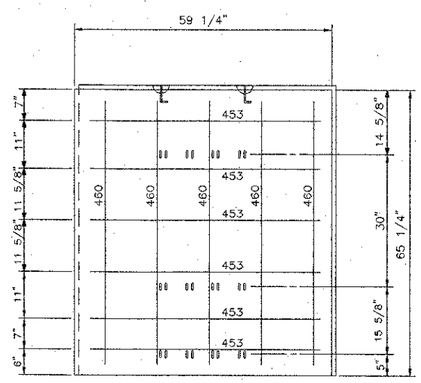

TYPE "4B66"
(BACK FACE)

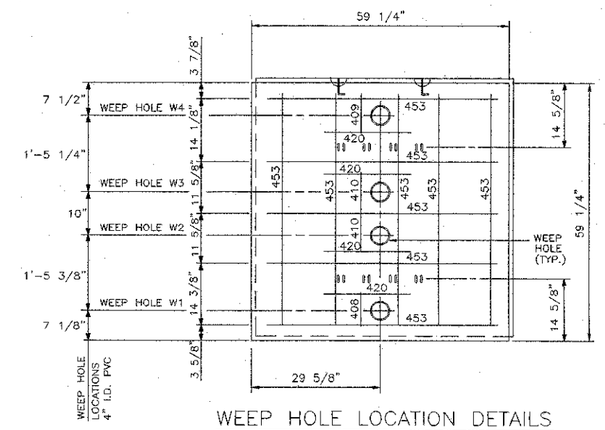

WEEP HOLE LOCATION DETAILS
STANDARD PANEL DESIGNATIONS ENDING WITH THE SUFFIX; W1,W2,W3 OR W4.
(BACK FACE)

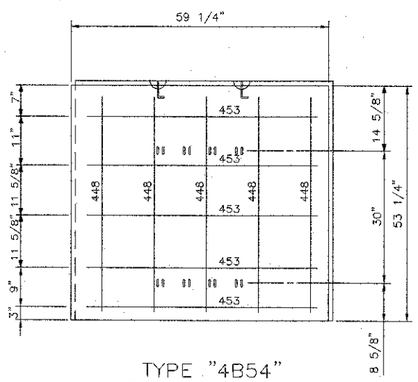

TYPE "4B54"
(BACK FACE)

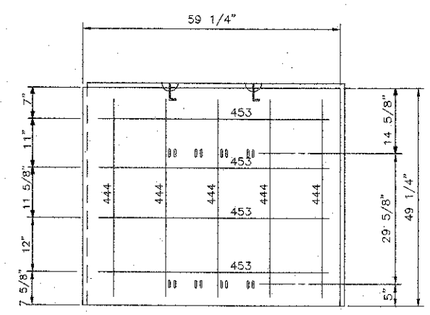

TYPE "4B50"
(BACK FACE)

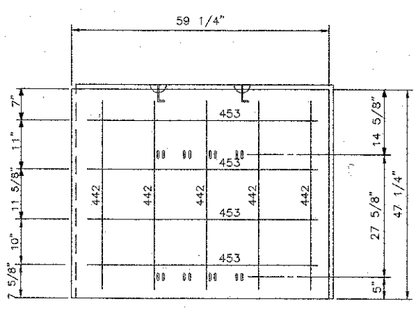

TYPE "4B48"
(BACK FACE)

PANEL REINFORCEMENT (BACK FACE)

U.S. PATENT NUMBER 4,725,170

NOTE: "I HEREBY CERTIFY THAT ALL DESIGN ASSUMPTIONS HAVE BEEN VALIDATED EITHER THROUGH CONSTRUCTION DETAILS OR NOTES ON THESE DRAWINGS OR THROUGH THE CONTRACT PLANS AND PROVISIONS."

APR 13 2001

PLANS PREPARED BY:
FOSTER-GEOTECHNICAL
A Division of L. B. Foster Company
1372 Old Bridge Rd., Suite 101, Woodbridge, VA 22192
Telephone: (703) 499-9818/ Fax: (703) 499-9348
SAN DIEGO, CA / WOODBRIDGE, VA / NORCROSS, GA

Foster Geotechnical claims a strict proprietary right in all drawings, specifications and calculations ("information") set forth on this sheet. The use of such information in whole or in part, or any reproduction thereof, is restricted to the site for which it was prepared and to the material and/or service provided by Foster Geotechnical. Any other use is strictly prohibited, and Foster Geotechnical disclaims any LIABILITY THEREFOR.

JOHN A. NICHOLSON JR.
Registered Professional Engineer
Commonwealth of Pennsylvania

PA DOT DWG #00-601-BQAD

Commonwealth of Pennsylvania
DEPARTMENT OF TRANSPORTATION
BUREAU OF DESIGN

PREFABRICATED RETAINING WALL DETAILS
M.S.E. WALL: FOSTER GEOTECHNICAL RETAINED EARTH WALL
SQUARE PANEL
SHOP DRAWING (ENGLISH UNITS)

DESIGNED: LC
DRAWN: LC
CHECKED: MM

SHEET 2 OF 3

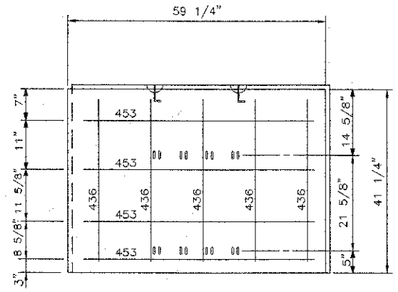

TYPE "4B42"
(BACK FACE)

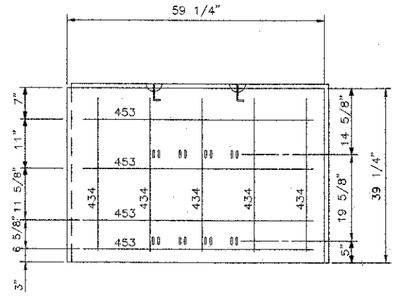

TYPE "4B40"
(BACK FACE)

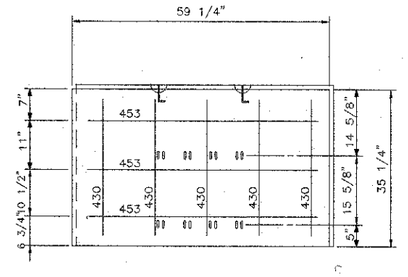

TYPE "4B36"
(BACK FACE)

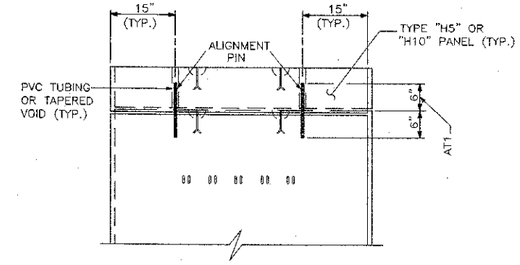

TYPE: "AT1" DETAIL

NOTE: TYPE "AT1" PANELS HAVE 2-12" #4 BAR ALIGNMENT PINS.

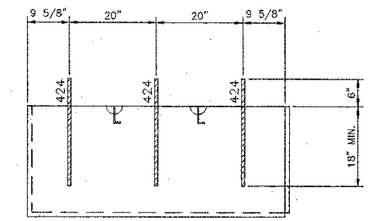

TYPE "T" PANEL DETAIL
(BACK FACE)

NOTE: ALL PANELS WITH A "T" SUFFIX REQUIRE 3-24" #4 BARS EMBEDDED 18" MINIMUM INTO PANEL, SPACED AS SHOWN ABOVE.

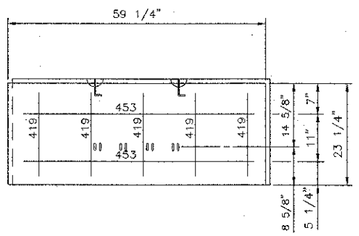

TYPE "4B24"
(BACK FACE)

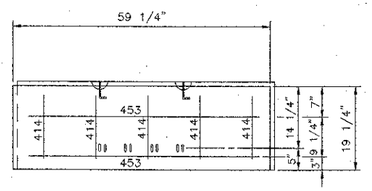

TYPE "4B20"
(BACK FACE)

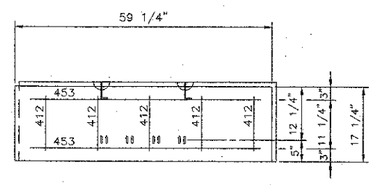

TYPE "4B18"
(BACK FACE)

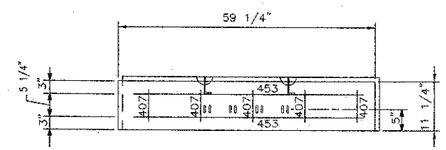

TYPE "4B12"
(BACK FACE)

APR 13 2001

PA DOT DWG #00-601-BQAD

PLANS PREPARED BY:
FOSTER-GEOTECHNICAL
A Division of L. B. Foster Company
1372 Old Bridge Rd., Suite 101, Woodbridge, VA 22192
Telephone: (703) 499-9818/ Fax: (703) 499-9348
SAN DIEGO, CA / WOODBRIDGE, VA / NORCROSS, GA

Foster Geotechnical claims a strict proprietary right in all drawings, specifications and calculations ("information") set forth on this sheet. The use of such information in whole or in part, or any reproduction thereof, is restricted to the site for which it was prepared and to the material and/or service provided by Foster Geotechnical. Any other use is strictly prohibited, and Foster Geotechnical disclaims any LIABILITY THEREFOR.

REGISTERED PROFESSIONAL ENGINEER
JOHN A. NICHOLSON, JR.
NO. 15000
COMMONWEALTH OF PENNSYLVANIA

Commonwealth of Pennsylvania
DEPARTMENT OF TRANSPORTATION
BUREAU OF DESIGN

PREFABRICATED RETAINING WALL DETAILS
M.S.E. WALL: FOSTER GEOTECHNICAL RETAINED EARTH WALL
SQUARE PANEL
SHOP DRAWING (ENGLISH UNITS)

SHEET 3 OF 3

DESIGNED: LC
DRAWN: LC
CHECKED: MM

PANEL REINFORCEMENT (BACK FACE)

U.S. PATENT NUMBER 4,725,170

NOTE: "I HEREBY CERTIFY THAT ALL DESIGN ASSUMPTIONS HAVE BEEN VALIDATED EITHER THROUGH CONSTRUCTION DETAILS OR NOTES ON THESE DRAWINGS OR THROUGH THE CONTRACT PLANS AND PROVISIONS."

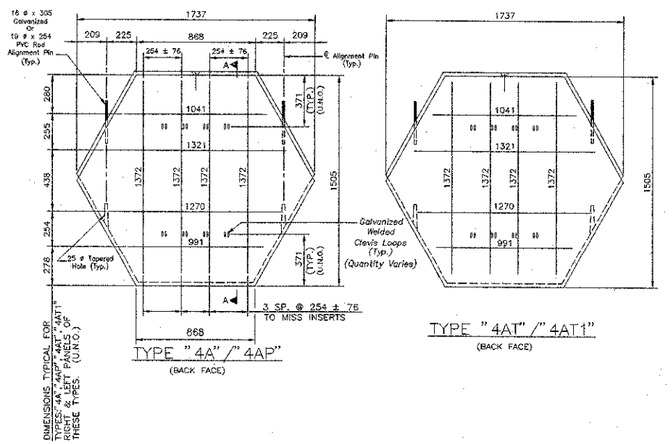

TYPE "4A" / "4AP"
(BACK FACE)

TYPE "4AT" / "4AT1"
(BACK FACE)

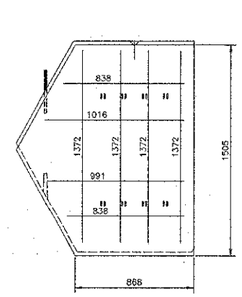

TYPE "4AL"
(BACK FACE)

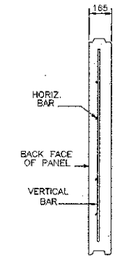

SECTION A–A

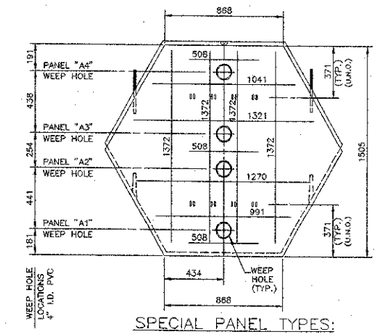

SPECIAL PANEL TYPES:
A1,A2,A3 & A4
(BACK FACE)
NOTE: USE ONE 420 BAR TO REINFORCE WEEP HOLE.

PENNSYLVANIA
DEPARTMENT OF TRANSPORTATION
RECOMMENDED

Scott Christie

CHIEF BRIDGE ENGINEER

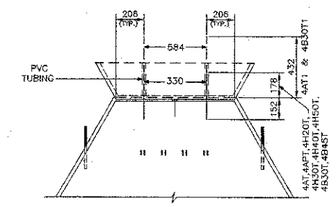

TYPES: 4AT,4AT1,4APT,4H20T,4H30T,
4H40T,4H50T,4B30T,4B30T1 & 4B45T
(SIMILAR FOR RIGHT AND LEFT END PANELS OF THESE TYPES.)
NOTE: 4AT,4APT,4H20T,4H30T,4H40T,4H50T,4B30T & 4B45T PANELS HAVE 2–330 BARS.
4AT1 & 4B30T1 PANELS HAVE 2–584 BARS.

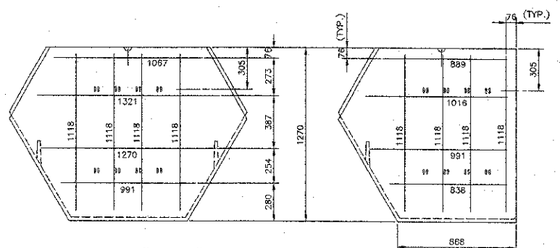

TYPE "4H50"
(BACK FACE)

TYPE "4H50L"
(BACK FACE)

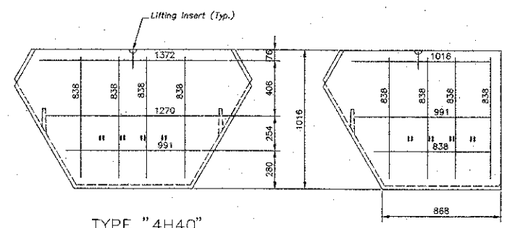

TYPE "4H40"
(BACK FACE)

TYPE "4H40L"
(BACK FACE)

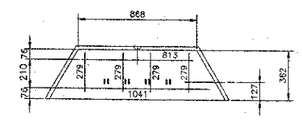

TYPE "4B15"
(BACK FACE)

NOTES:

1. ALL REINFORCING STEEL TO BE 13M BARS. (ASTM–A 615M–96a)
2. ALL REINFORCING STEEL TO BE GRADE 400, EPOXY COATED.
3. DIMENSIONS SHOWN ARE TO THE FRONT FACE UNLESS NOTED OTHERWISE.
4. HORIZONTAL BARS TO HAVE 50mm(MIN.),63mm(MAX.) CLEAR TO THE BACK FACE.
5. VERTICAL BARS TO HAVE 63mm(MIN.),75mm(MAX.) CLEAR TO THE BACK FACE.
6. ALL BARS TO HAVE 50mm MIN. CLEAR TO SIDES.
7. RIGHT END PANELS ARE OPPOSITE OF LEFT END PANELS.
8. PANEL DESIGNATIONS FOLLOWED BY A "T" INDICATES THAT TWO 13M BARS 330mm OR 584mm LONG ARE REQUIRED. SEE DETAIL UPPER RIGHT THIS SHEET.
9. REINFORCEMENT LABELS INDICATE BAR SIZE AND LENGTH. EXAMPLE: 1372 IS A 13M BAR 1372mm LONG.
10. PANEL TYPES; "4A","4B30","4B45" (INCLUDING LEFT AND RIGHT END PANELS) REQUIRE ALIGNMENT PINS.
11. LIFTING INSERT AS SUGGESTED BY MANUFACTURER.
12. REFER TO BC–799 FOR PRECAST COPING REBAR DETAILS.
13. CONCRETE MINIMUM COMPRESSIVE STRENGTH AS SPECIFIED IN THE CONTRACT SPECIAL PROVISIONS.
14. PANEL TYPE IS DESIGNATED ON EACH PANEL ON THE WALL ELEVATION SHEET. PREFIX NUMBER INDICATES NUMBER OF CLEVIS LOOPS PER ROW. EXAMPLE: 5B30 IS A "B30" PANEL WITH FIVE (5) CLEVIS LOOPS PER ROW.
15. REINFORCEMENT EQUALLY SPACED UNLESS OTHERWISE INDICATED.
16. PANEL TOLERANCES IN ACCORDANCE WITH ACI 117.
17. FABRICATE IN ACCORDANCE WITH PUBLICATION 408 SECTION 714.
18. PROVIDE 10mm x 10mm MINIMUM CHAMFER ON ALL EXPOSED EDGES OF PANELS (FRONT FACE ONLY).

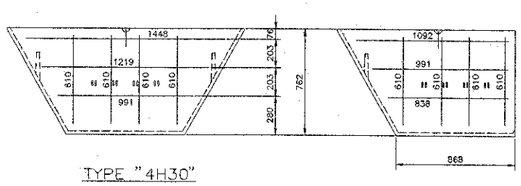

TYPE "4H30"
(BACK FACE)

TYPE "4H30L"
(BACK FACE)

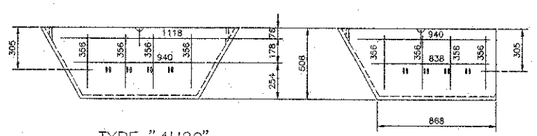

TYPE "4H20"
(BACK FACE)

TYPE "4H20L"
(BACK FACE)

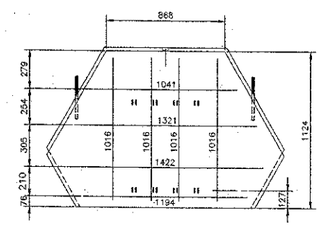

TYPE "4B45"
(BACK FACE)

APR 13 2001

PA DOT DWG #00–602–BQAD (M)

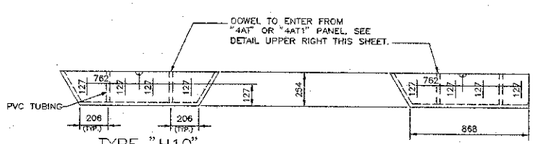

TYPE "H10"
(BACK FACE)

TYPE "H10L"
(BACK FACE)

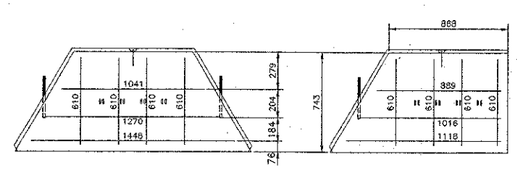

TYPE "4B30"
(BACK FACE)

TYPE "4B30L"
(BACK FACE)

PANEL REINFORCEMENT (BACK FACE)

U.S. PATENT NUMBER 4,725,170

NOTE: "I HEREBY CERTIFY THAT ALL DESIGN ASSUMPTIONS HAVE BEEN VALIDATED EITHER THROUGH CONSTRUCTION DETAILS OR NOTES ON THESE DRAWINGS OR THROUGH THE CONTRACT PLANS AND PROVISIONS."

PLANS PREPARED BY:
FOSTER-GEOTECHNICAL
A Division of L. B. Foster Company
1372 Old Bridge Rd., Suite 101, Woodbridge, VA 22192
Telephone: (703) 499-9818/ Fax: (703) 499-9348
SAN DIEGO, CA / WOODBRIDGE, VA / NORCROSS, GA

Foster Geotechnical claims a strict proprietary right in all drawings, specifications and calculations ("information") set forth on this sheet. The use of such information in whole or in part, or any reproduction thereof, is restricted to the site for which it was prepared and to the material and/or service provided by Foster Geotechnical. Any other use is strictly prohibited, and Foster Geotechnical disclaims any LIABILITY THEREFOR.

REGISTERED PROFESSIONAL ENGINEER JOHN A. NICHOLSON, JR.

Commonwealth of Pennsylvania
DEPARTMENT OF TRANSPORTATION
BUREAU OF DESIGN

PREFABRICATED RETAINING WALL DETAILS
M.S.E. WALL: FOSTER GEOTECHNICAL RETAINED EARTH WALL
HEXAGON PANEL
SHOP DRAWING (METRIC UNITS)

SHEET 1 OF 1

DESIGNED: LC
DRAWN: RW
CHECKED: MM

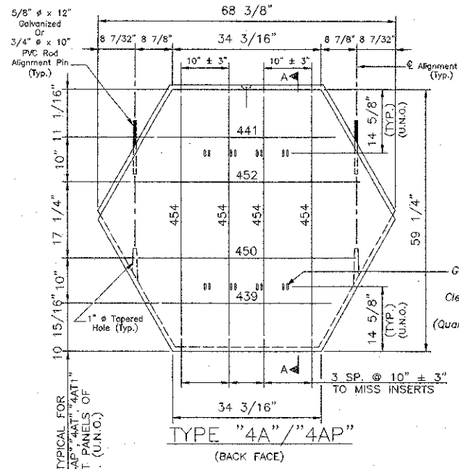

TYPE "4A"/"4AP"
(BACK FACE)

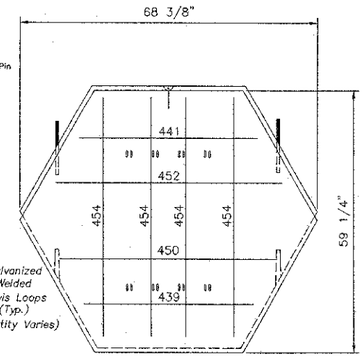

TYPE "4AT"/"4AT1"
(BACK FACE)

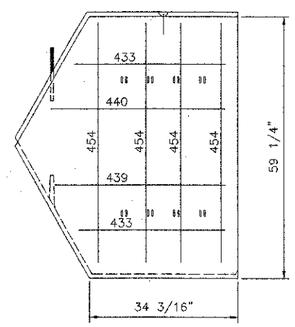

TYPE "4AL"
(BACK FACE)

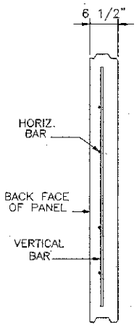

SECTION A–A

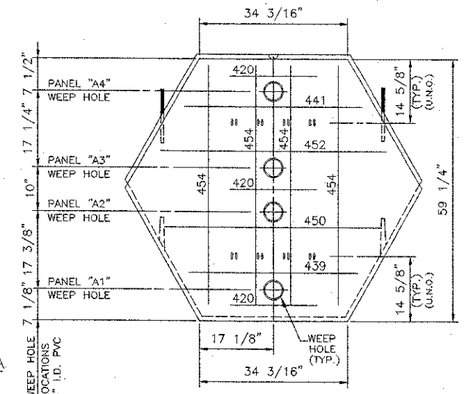

SPECIAL PANEL TYPES:
A1,A2,A3 & A4
(BACK FACE)
NOTE: USE ONE 420 BAR TO REINFORCE WEEP HOLE.

PENNSYLVANIA
DEPARTMENT OF TRANSPORTATION
RECOMMENDED
Scott Christie
CHIEF BRIDGE ENGINEER

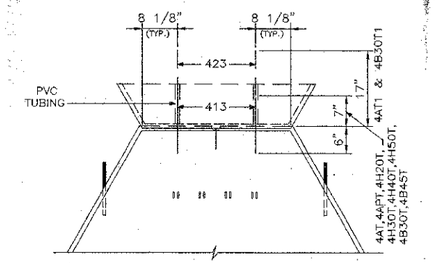

TYPES: 4AT,4AT1,4APT,4H20T,4H30T, 4H40T,4H50T,4B30T,4B30T1 & 4B45T
(SIMILAR FOR RIGHT AND LEFT END PANELS OF THESE TYPES.)
NOTE: 4AT,4APT,4H20T,4H30T,4H40T,4H50T,4B30T & 4B45T PANELS HAVE 2–413 BARS. 4AT1 & 4B30T1 PANELS HAVE 2–423 BARS.

APR 13 2001

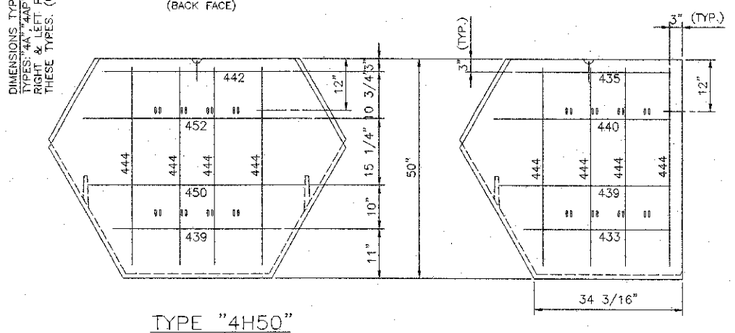

TYPE "4H50"
(BACK FACE)

TYPE "4H50L"
(BACK FACE)

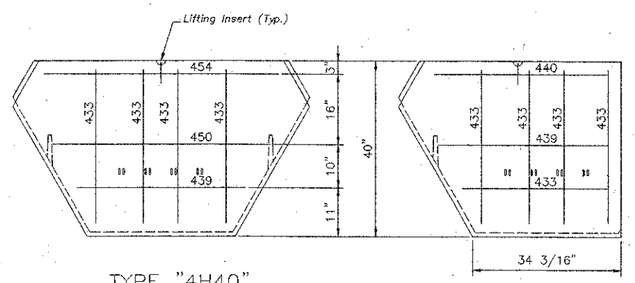

TYPE "4H40"
(BACK FACE)

TYPE "4H40L"
(BACK FACE)

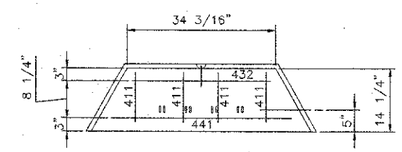

TYPE "4B15"
(BACK FACE)

NOTES:
1. ALL REINFORCING STEEL TO BE #4 BARS, (ASTM–A615).
2. ALL REINFORCING STEEL TO BE GRADE 60, EPOXY COATED.
3. DIMENSIONS SHOWN ARE TO THE FRONT FACE UNLESS NOTED OTHERWISE.
4. HORIZONTAL BARS TO HAVE 2"(MIN.),2 1/2"(MAX.) CLEAR TO THE BACK FACE.
5. VERTICAL BARS TO HAVE 2 1/2"(MIN.),3"(MAX.) CLEAR TO THE BACK FACE.
6. ALL BARS TO HAVE 2" MIN. CLEAR TO SIDES.
7. RIGHT END PANELS ARE OPPOSITE OF LEFT END PANELS.
8. PANEL DESIGNATIONS FOLLOWED BY A "T" INDICATES THAT TWO #413 OR #423 BARS ARE REQUIRED. SEE DETAIL UPPER RIGHT THIS SHEET.
9. REINFORCEMENT LABELS INDICATE BAR SIZE AND LENGTH. EXAMPLE: 454 IS A #4 BAR 54" LONG.
10. PANEL TYPES: "4A","4B30","4B45" (INCLUDING LEFT AND RIGHT END PANELS) REQUIRE ALIGNMENT PINS.
11. LIFTING INSERT AS SUGGESTED BY MANUFACTURER.
12. REFER TO BC–799 FOR PRECAST COPING REBAR DETAILS.
13. CONCRETE MINIMUM COMPRESSIVE STRENGTH AS SPECIFIED IN THE CONTRACT SPECIAL PROVISIONS.
14. PANEL TYPE IS DESIGNATED ON EACH PANEL ON THE WALL ELEVATION SHEET. PREFIX NUMBER INDICATES NUMBER OF CLEVIS LOOPS PER ROW. EXAMPLE: 5B30 IS A "B30" PANEL WITH FIVE (5) CLEVIS LOOPS PER ROW.
15. REINFORCEMENT EQUALLY SPACED UNLESS OTHERWISE INDICATED.
16. PANEL TOLERANCES IN ACCORDANCE WITH ACI 117.
17. FABRICATE IN ACCORDANCE WITH PUBLICATION 408 SECTION 714.
18. PROVIDE 3/8" x 3/8" MINIMUM CHAMFER ON ALL EXPOSED EDGES OF PANELS (FRONT FACE ONLY).

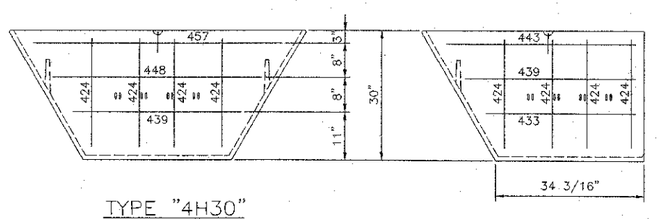

TYPE "4H30"
(BACK FACE)

TYPE "4H30L"
(BACK FACE)

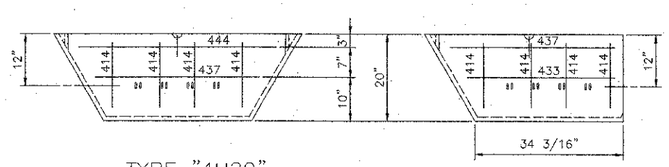

TYPE "4H20"
(BACK FACE)

TYPE "4H20L"
(BACK FACE)

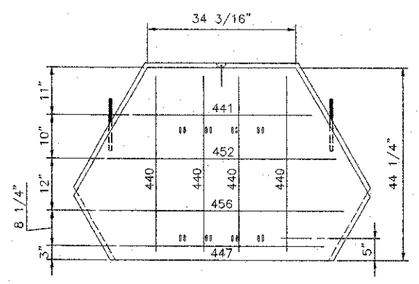

TYPE "4B45"
(BACK FACE)

PA DOT DWG #00–602–BQAD

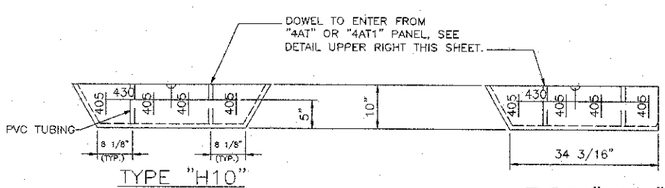

TYPE "H10"
(BACK FACE)

TYPE "H10L"
(BACK FACE)

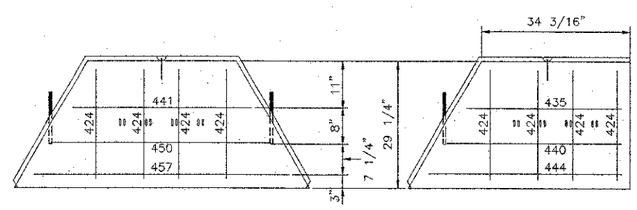

TYPE "4B30"
(BACK FACE)

TYPE "4B30L"
(BACK FACE)

PANEL REINFORCEMENT (BACK FACE)
SCALE: 3/4"=1'–0"

U.S. PATENT NUMBER 4,725,170

NOTE: "I HEREBY CERTIFY THAT ALL DESIGN ASSUMPTIONS HAVE BEEN VALIDATED EITHER THROUGH CONSTRUCTION DETAILS OR NOTES ON THESE DRAWINGS OR THROUGH THE CONTRACT PLANS AND PROVISIONS."

PLANS PREPARED BY:
FOSTER•GEOTECHNICAL
A Division of L. B. Foster Company
1372 Old Bridge Rd., Suite 101, Woodbridge, VA 22192
Telephone: (703) 499–9818/ Fax: (703) 499–9348
SAN DIEGO, CA / WOODBRIDGE, VA / NORCROSS, GA

Foster Geotechnical claims a strict, proprietary right in all drawings, specifications and calculations ("information") set forth on this sheet. The use of such information in whole or in part, or any reproduction thereof, is restricted to the site for which it was prepared and to the material and/or service provided by Foster Geotechnical. Any other use is strictly prohibited, and Foster Geotechnical disclaims any LIABILITY THEREFOR.

REGISTERED PROFESSIONAL ENGINEER JOHN A. NICHOLSON, JR. 22244-E

Commonwealth of Pennsylvania
DEPARTMENT OF TRANSPORTATION
BUREAU OF DESIGN

PREFABRICATED RETAINING WALL DETAILS
M.S.E. WALL: FOSTER GEOTECHNICAL RETAINED EARTH WALL
HEXAGON PANEL
SHOP DRAWING (ENGLISH UNITS)

SHEET 1 OF 1

DESIGNED: LC
DRAWN: RW
CHECKED: MM

Product:

Item 8642-xxxx – Evergreen Precast Retaining Wall System – Square Foot
Special Provisions and Standard Detail Drawings
PADOT DWG. #92-047 PE (1)

Approval Date:	**Initiated by SOL**
June 26, 2003	Not Applicable

Application/Use:

Evergreen Precast Concrete Retaining Wall Systems manufactured by Schuylkill Products Inc., 121 River Street, Cressona, PA 17929-1133 (Telephone No. 570-385-2352), have been approved to be used as an **"alternate"** or **"as-designed"** to Precast Modular Retaining Wall System and/or MSE Wall System.

Also Consider Evergreen Precast Concrete Retaining Wall System for the following conditions:

1. **Suitable**:

    - Supporting and/or carrying live loads as indicated on the Standard Detail Drawings [PADOT DWG. #92-047 PE (1), dated June 26, 2003]

2. **Not Suitable**:

    - Along stream channels

District Engineers/Administrator may permit the use of these Evergreen Precast Concrete Retaining Wall Systems, as an **"alternate"** or **"as-designed"** on a project-by-project basis.

Specifications:

Attached is a copy of the Design/Material/Construction Specifications specified on the Standard Detail Drawings PADOT DWG. #92-047 PE (1) dated June 26, 2003 for Evergreen Precast Concrete Retaining Wall Systems.

Standard Drawings:

Attached is a copy of the Standard Detail Drawings PADOT DWG. #92-047 PE (1) dated June 26, 2003 for Evergreen Precast Concrete Retaining Wall Systems for your use.

Comment:

On those projects permitting the use of this system as an alternate, a special provision should be included in the proposal to indicate that the “Evergreen Precast Concrete Retaining Wall Systems” as an alternate is allowed.

The contractor will be required to revise the pertinent contract drawings as per DM-4, PP 1.10 to show the usage of “Evergreen Precast Concrete Retaining Wall Systems” and will be required to reimburse the Department a fee of **$1000** per design for the review and approval of the revision. This should be specified in the contract’s Special Provisions.

The Department’s specifications, Section 107.03 of the Publication 408 is applicable on all projects for the use of Evergreen Precast Concrete Retaining Wall Systems.

FHWA approval has been secured for Evergreen Precast Concrete Retaining Wall Systems.

DESIGN SPECIFICATIONS FOR EVERGREEN PRECAST CONCRETE RETAINING WALL SYSTEM

1.0 General:

a. Schuylkill Product's designated design consultant to prepare the design calculations of Evergreen Precast Walls in accordance with the guidelines specified herein and as indicated on the Standard Detail Drawings (Drawing 92-047PE). Submit design procedures or permissible variations other than those contained herein for approval to the Bureau of Design, Bridge Quality Assurance Division, Harrisburg, Pennsylvania.

b. The Evergreen Precast Concrete Retaining Wall design consultant takes full responsibility for the engineering theory, calculations, correctness, and ensuring all design assumptions are validated in the contract documents, either by needed details or construction specifications.

c. Secure Chief Bridge Engineer's approval in writing before incorporating Evergreen Precast Walls in any project.

d. Limit Evergreen Precast Concrete Retaining Walls to wall heights not exceeding 43'-0" (13.1 M).

e. Limit Evergreen Precast Concrete Retaining Walls to height not to exceed 30'-0" (9.2 M) for live load applications.

2.0 Design:

a. Secure District Bridge and Geotechnical (Soils) Engineer's approval before incorporating Evergreen Precast Walls in any project.

b. Provide at no expense to the Department four sets (three sets to District and one set to Central Office Bridge Division) of construction drawings (22"x34") (594x841), calculations, erection methods, and detailed erection calculations, erection methods, and detailed erection plans for approval. Provide approved drawings, using Department drafting standards. Show a professional engineer's seal licensed in Pennsylvania with valid signature in ink, the date signed, a business name and business address, on the first sheet of the design drawings, use mylar furnished by the Department. The District Bridge Engineer will sign the final design plans.

Include the following statement on the first sheet of the drawings above the P.E. Seal: "I hereby certify that all design assumptions have been validated either through construction details or notes on these drawings or through the contract plans and provisions.

c. On the first sheets of the computations, show a professional engineer's seal (licensed in Pennsylvania), signature and the date signed. Evergreen Precast Concrete Retaining Wall parameters, and other limitations on fill heights are as per manufacturer's standard drawings.

d. In the event that certain design parameters, stresses or specifications are in conflict, the following order of performance governs:

1. Design requirements listed in "Special Drawings and Special Design Requirements" (Part B) of the special provision.

2. Design related strike-off letters in effect on the date of project advertisement. Refer to list in Part B.

3. PDT – Design Manual Part 4, (April, 2000 Edition) (Structures).

4. PDT – Design Standards.

5. AASHTO Standard LRFD Bridge Design Specifications (1998 Second Edition and approved Interim Specifications).

e. In the event that a clear order of predominance cannot be established or a difference in the interpretation of the design cannot be solved, the Chief Bridge Engineer will arbitrate and make a final decision.

f. Comply with the design criteria in Design Manual Part 4 (April, 2000 Edition) Structures, the AASHTO LRFD Bridge Design Specifications, (1998 2nd Edition) for Highway Bridges, and as specified, subject to exception and/or additions under "SPECIAL DRAWINGS AND SPECIAL DESIGN REQUIREMENTS" (Part B).

- Apply a live load surcharge in the wall design where vehicular load is expected to act on the surface of the backfill within a distance equal to the wall height behind the back of the front face of Evergreen Wall. (AASHTO 3.11.6)

g. Check foundation pressure and settlement and overall stability in accordance with the criteria specified in DM-4 to ensure that no foundation failure occurs. The Evergreen Precast Concrete Retaining Wall manufacturer will provide horizontal and vertical design loads at the top of the foundation to the designer. Design structural components to resist forces. Adequately reinforce the entire footing as required by design.

h. Do not change bottom of footing elevation unless authorized by the District Bridge Engineer/District Geotechnical (Soils) Engineer.

i. Provide a 6" (152) diameter foundation drain into the two-foot minimum width of select backfill, wrap with Geotextile Fabric, Class 1, behind the wall to improve drainage conditions. Direct seepage from foundation drain to storm water conveyances.

j. Place bottom of footing as a minimum depth equal to prevailing frost depth but no less than 3 feet (915) below ground elevation with one foot minimum cover on the top of footing.

k. Provide a single faced concrete barrier in front of the wall for traffic protection if required.

PENNSYLVANIA
DEPARTMENT OF TRANSPORTATION
RECOMMENDED

Scott Christie

CHIEF BRIDGE ENGINEER

JUN 26 2003

INDEX OF DRAWINGS

1. DESIGN SPECIFICATIONS
2. CONSTRUCTION SPECIFICATIONS
3. CONSTRUCTION SPECIFICATIONS (CONTINUED)
4. SAMPLE EVERGREEN RETAINING WALL PLAN & ELEVATION – I
5. SAMPLE EVERGREEN RETAINING WALL PLAN & ELEVATION – II
6. SAMPLE CROSS SECTIONS TYPICAL SECTIONS – I
7. SAMPLE CROSS SECTIONS TYPICAL SECTIONS – II
8. MISCELLANEOUS JOINT DETAILS
9. EVERGREEN PRECAST CONCRETE UNIT DIMENSIONS AND DESIGN INFORMATION
10. EVERGREEN PRECAST CONCRETE UNIT DIMENSIONS AND REINFORCEMENT DETAILS
11. END SHELF DETAIL
12. SAMPLE CROSS SECTIONS FOR 4:1 BATTERED WALLS – I
13. SAMPLE CROSS SECTIONS FOR 4:1 BATTERED WALLS – II
14. SAMPLE CROSS SECTIONS FOR VERTICAL WALLS

COMMONWEALTH OF PENNSYLVANIA
REGISTERED PROFESSIONAL
LIN CHEN
ENGINEER
No. 14128E

PREPARED BY:
EVERGREEN PRECAST CONCRETE
RETAINING WALL SYSTEMS, INC.
SCHUYLKILL PRODUCTS
121A RIVER STREET
CRESSONA, PA 17929

Lin Chen

ENGINEER

6/18/03

DATE

"I HEREBY CERTIFY THAT ALL DESIGN ASSUMPTIONS HAVE BEEN VALIDATED EITHER THROUGH CONSTRUCTION DETAILS OR THROUGH THE CONTRACT PLANS AND PROVISIONS."

All dimensions are in millimeter unless otherwise noted. Metric units are in parentheses. Either all metric or all English values must be used on plans. Metric and English values shown may not be mixed.

COMMONWEALTH OF PENNSYLVANIA
DEPARTMENT OF TRANSPORTATION

EVERGREEN PRECAST CONCRETE
RETAINING WALL SYSTEM
STANDARD DRAWINGS

DESIGN SPECIFICATIONS

PADOT DWG # 92-047PE (1)

File: SHEET1of14.dwg Date/Time: April 25, 2003 2:44 p.m. Scale: 1=1 Cdavis Xrefs:

NVV/TPM

DESIGN SPECIFICATIONS FOR EVERGREEN PRECAST CONCRETE RETAINING WALL SYSTEM (CONT.)

I. Provide the following material for precast concrete wall:

- Minimum 28 day strength of concrete, f'c, 4,500 psi (31.0 MPa).
- Chamfer all exposed edges 1" x 1" (25x25) except as noted.
- Reinforcement Bars:
  Grade 60 reinforcing steel bars that meet the requirements of deformed billet – steel bars (ASTM A615), or low alloy deformed bars (A706). Do not weld Grade 60 reinforcing steel bars unless specified. Grade 40 reinforcing steel bars may be substitued with a proportional increase in cross sectional area.
- Steel Welded Wire Fabric:
  AASHTO M55 (ASTM 185)
  (a) Epoxy Coating (when indicated), ASTM A884/A884M, Type 1, Class A.

CONSTRUCTION SPECIFICATIONS FOR EVERGREEN PRECAST RETAINING WALL SYSTEMS

I. DESCRIPTION

This work is the designing, furnishing, and erecting of Evergreen Precast Wall Systems used as retaining walls.

These systems, some of which are propriety, consist of precast concrete units erected to form a gravity retaining wall.

II. MATERIAL

(a) Provide materials and workmanship in accordance with Publication 408, and as specified herein.

(b) Evergreen Precast Concrete Wall Units. Furnish precast wall units in accordance with Section 714, except provide concrete for precast wall units and end panels having a 28–day minimum compressive strength of 4,500 psi (31.0 MPa) when tested in accordance with PTM No. 604.

Place reinforcement and handling devices, to the dimensions and tolerances indicated or as approved by the Engineer, prior to casting.

1. Testing and Inspection. Acceptability of the precast wall units will be determined on the basis of entrained air content testing of the concrete mixture, compressive strength testing, and visual inspection. Furnish facilities for the Department to perform all necessary sampling and testing in an expeditious and satisfactory manner. Acceptance will be as herein specified.

   Acceptance of precast concrete wall units with respect to compressive strength will be based on the results of production lot testing. A production lot is defined as the wall units represented by one day's production. Four cylinders per lot will be selected in accordance with PTM No. 601. Cylinder specimens will be cured with the product and tested in accordance with PTM No. 611. Acceptance will be based on compliance with the requirements of Sections 714.4(b) and 714.7(a), except the lot compressive strength will be determined as the average of the compressive strength testing of 2 cylinders and no individual test result may be below 3500 psi.

   Acceptance with respect to visual inspection will be based on compliance with the requirements of Section 713.2(d). In addition, precast wall units may be rejected for color or texture variations of the front face due to excess form oil or other causes.

   Completed precast units will be inspected before shipment, and cracked, damaged, or otherwise unsatisfactory units will be rejected. Properly patch all excesive voids and other defectes on exterior surfaces in accordance with the approved Quality Control Plan.

   Repairs and repair procedures require the approval of the Engineer. Mark rejected precast units with the words "Rejected for Department Use" using waterproof paint.

2. Forms. Construct forms of steel in a manner that assures the production of uniform units, and leave forms in place until they can be removed without damage to the unit.

   Replace damaged forms or forms having a deteriorated surface.

3. Mixing and Placing Concrete. Mix and deliver concrete as specified in Section 704. For transporting, placement, and consolidation of concrete, use methods that will prevent segregation of concrete materials and displacement of steel reinforcement from its proper position in the form. Do not place concrete when ambient temperature are below 40 degrees Fahrenheit (5 degress Celsius) or above 100 degrees Fahrenheit (38 degrees Celsius). Do not use admixtures containing chlorides.

4. Casting. Carefully place concrete in the forms and vibrate sufficiently to produce a surface free from imperfections such as honeycombing, segregation, or cracking. Use clear form oil from the same manufacturer throughout the casting operation.

5. Finish. Provide a conventional surface finish unless otherwise indicated. When a special or decorative surface finish is required, display for approval a typical sample of the precast unit, showing the color, texture, and finish intended to be used prior to standard production of units.

6. Curing. Cure units in accordance with Section 714 and the approved QC plan for the period of time required for the concrete to obtain the specified minimum compressive strength. Control curing until a compressive strength of 3.600 psi (25 MPa), 80% fc', is achieved.

7. Tolerance. Manufacture all units within the following tolerances:
   - General dimensions, position of lifting devices within 1 inch (25); all other dimensions within $^1/_4$ inch (5).
   - Unit dimensions: Not to exceed $^1/_2$ inch (13) as determined by length and transverse width near the legs.
   - Unit surface finish: Not to exceed $^1/_4$ inch (6) on smooth formed surface measured over a length of 10 feet (3048).
   - Location of reinforcement steel: Cover tolerance; Minimum $^1/_4$ to + $^1/_2$ inch (6 to 13). Otherwise within plus or minus $^1/_2$ inch (13).
   - ACI 117. (Others not specified).

8. Marking. Clearly scribed or paint with waterproof paint on the interior surface of each unit the date of manufacture, lot production number, piece mark, and QC inspection date, and stamp.

9. Handling, Storing, and Shipping. Handle, store, and ship all units in such a manner as to eliminate the danger of chipping, cracking, fracture, and excessive handling stress.

   Do not ship units until the 28–day minimum compressive strength is attained. Provide 24–hour advance notice of loading and shipping schedule.

   Repair or replace any unit damaged during handling, transporting, erecting or backfilling, or any unit that cannot be placed satisfactorily in the wall, in accordance with the approved Quality Control Plan.

JUN 26 2003

COMMONWEALTH OF PENNSYLVANIA DEPARTMENT OF TRANSPORTATION	
EVERGREEN PRECAST CONCRETE RETAINING WALL SYSTEM STANDARD DRAWINGS CONSTRUCTION SPECIFICATIONS	
PADOT DWG # 92–047PE (1)	SHEET 2 of 14

File: SHEET2of14.dwg Date/Time: April 25, 2003 2:45 p.m. Scale: 1=1 Cdavis Xrefs:

(c) Cement Concrete: Section 704. Use Class A concrete for cast–in–place footings and Class AA for single face barrier.

(d) Reinforcement Bars. Grade 60, Section 709.1(a)l., except No. 3 (No. 10) stirrup bars may be Grade 40. Provide epoxy coated reinforcement bars, as specified in Section 709.1(c), for cast–in–place or precast single face concrete barrier, and precast wall unit, if indicated or specified.

(e) Steel Welded Wire Fabric. Section 709.3.

(f) Joint Filler.

- For Joints Between L–Shaped Trays at the Front Face of Units:

  Cover the jaints with geotextile fabric meeting the requirements of Section 735, Class 2, Type A.

- For Horizontal Joints:

  Provide a thin quick set mortar meeting the requirements of Section 1001.2(d) on the full contact surface of precast concrete units and the footing where the first level of precast wall units are placed.

(g) Granular Fill Material for Precast Concrete Wall Unit.

Provide the granular fill material to meet the following requirements: Gradation limits as determined by AASHTO–T27:

Sieve size:	Percent passing:
5 inches (130)	100%
No. 200 (75 μ m)	10–25%

(h) Selected Barrow Excavation. Structure Backfill as shown on the Standard Drawings RC 12–M.

(i) Structural Foundation Drains. Section 610.2(a).

(j) Geotextiles. Class 1 and Class 2, Section 735.

(k) Coarse Aggregate No. 8 and Coarse Aggregate No. 57. Section 703.2. Coarse Aggregate, 2RC. Section 703.3.

(l) Top Soil. Section 801.2.

(m) Seed. Section 804.2(b).

III. CONSTRUCTION

(a) Shop Drawings. Prior to fabrication, submit and obtain approval for shop drawings. Show complete fabrication details and dimensions, as well as handling, transportation, and construction procedures for all wall units.

(b) Excavation and Foundations. Grade the structure foundation level, or to the indicated slope, for the width required or as indicated in accordance with Section 203. Prior to wall construction, except where constructed in rock, compact the foundation with a smooth wheel vibratory roller. Remove any foundation soils found to be unsuitable and replace with granular material 2RC or Class C concrete as directed. Excavate, in accordance with Section 204, to the limits and construction stages indicated.

Do not begin wall erection until the foundation has been approved.

Construct cast–in–place or precast footings and leveling pads as indicated and specified in the applicable portions of Section 1001.3, to the dimensions and details indicated and within the right–of–way, prior to placement of precast wall units. The tolerance to set the precast footing level or on an indicated slope on the appoved foundation is 1 inch (25) maximum measured at the end of the footing. If the limit is exceeded, reconstruct the foundation in accordance with the method described in the first paragraph and reset the footing.

Comply with Section 1001.3(q) for removal of false work and forms and application of external load to concrete. Construct in conformance with the grades and cross slopes indicated.

Place bottom of foating and/or leveling pad at a minimum depth equal to prevailing frost depth but not less than 3 feet (915) below finished ground elevatian, unless otherwise indicated.

(c) Wall Erection.

1. Install precast wall units as shown on the approved shop drawings and in compliance with the lines and grades as indicated. Erection of the units typically should begin at the lowest elevation and proceed laterally along the wall length. Where a wall meets a fixed structure or a critical location such as a bend point, erection should begin at that point, provided the site configuration is suitable. Set precast wall units of the front faces in line with the plan layout of the structure. For Vertical Walls set the front faces of walls in vertically. For battered walls, set precast wall units at the batter rate of the structure. Adjust first level of units with smalle wedge shims, made of a non–biodegrodable material, using an engineers level to set front level and legs at slant for proper wall batter within $^{1}/_{8}$–inch (3) tolerance. Gauge vertical joint width with a flot steel bar whose width is equal to the desired joint width. Take special care to set the bottam course of precast unit to true line and grade.

2. Install faundation drain behind the wall as indicated or as shawn an the approved shap drawings.

3. Special Handling of Units

- Use long suspension gear with minimum angle of 1:1 = 45 degrees.
- Use special gear with 4 point equal suspension for stripping element from mold, never 2 or 3 points only.
- Use 4 point suspension for any later handling or hang units at transverse beams.
- Prepare level stockpile pads in yard and on site to avoid twist.

4. Erection of Precast Units:

- Place first level of units on non–shrink mortar. Place other levels of precast wall units on o thin quick set mortar on the full contact surface. Use two connecting pins to prevent dislocation.
- Use Joint Unit at jaints with two unequal Evergreen Precast Wall Units as shown on Sheet 6 and place End Shelf Unit on exposed ends of the Evergreen Precast Wall Units.
- Use geotextile, Class 2, Type A, to bridge the joints and gaps between the L shape trays at the front face of units to prevent erosion.

(d) Backfilling

1. Fill first level of units with a minimum of 12–inches (305) of the specified granular fill material.

2. Compact the backfill material to a minimum of 90% and a maximum of 95% dry density as determined by ASTM Test D1557. Do not over compact to avoid damage to units. Fill and compact each unit with specified backfill material in two equal lifts of each successive course of precast wall units.

3. Place structure backfill material behind the wall within the limits shown on the Standard Drawings, as indicated or directed, in accordance with the requirements of Sectian 1001.3 (t), except the 10–day waiting period is not required. Limit the placement of the structure backfill in maximum 12–inch (305) thick lifts and compact to a minimum 90% and maximum 95% of maximum dry density as determined by ASTM Test 1557 with 4 feet (1220) from the backside of the wall. Do not use heavy compacting equipment in this area. Compact structure backfill beyond 4 feet (1220) from back of wall units in accordance with Section 1001.3(t).

4. Build up the Evergreen wall units and backfilling simultaneously to ensure that the elevation of the fill behind the wall and the fill within the elements not differ by more then 30 inches (762). Fill the units first and behind the wall second to prevent the elements from sliding. At the end of each day, slope the last level of backfill away from the wall in order to rapidity direct runoff away from the wall face. In addition do not allow surface runoff from adjacent areas to enter the wall construction site.

5. Fill front pockets of L–shaped tray with min. of 10 inches (254) plantable top soil min. 1–inch (25) freeboard to rim of tray. Fill and grade topsoil as wall goes up. Seed for erosion protection in accardance with Section 804.

6. Where wall is below roadway or not visible, planting vegetation is not necessary and elements may be filled with No. 57 caarse aggregate rather than top soil.

(e) The following vegetation is recammended:

- January Jasmine, Blue Rug Junipers, Cotaneaster, Ivy, Honey Suckle or PennDOT formula "L" Seed Mix

(f) Technical Assistance. Arrange for a company representative to be present at the project site to assist the fabricator, Contractor, and Engineer until they are familiar and confident in casting, installation, and erection procedures. Arrange far manthly visits to the project site by a company representative/engineer during wall construction. Provide a technical representative to assist in the event unusual problems or special circumstances arise.

IV. MEASUREMENT AND PAYMENT

Evergreen Precast Retaining Wall System – Square Foot or (Square Meter).

Item 0804–0012 Seeding and Soil Supplements

JUN 26 2003

COMMONWEALTH OF PENNSYLVANIA
DEPARTMENT OF TRANSPORTATION

EVERGREEN PRECAST CONCRETE RETAINING WALL SYSTEM STANDARD DRAWINGS

CONSTRUCTION SPECIFICATIONS (CONTINUED)

PADOT DWG # 92–047PE (1)

File: SHEET3of14.dwg Date/Time: April 25, 2003 2:46 p.m. Scale: 1=1 Cdavis Xrefs:

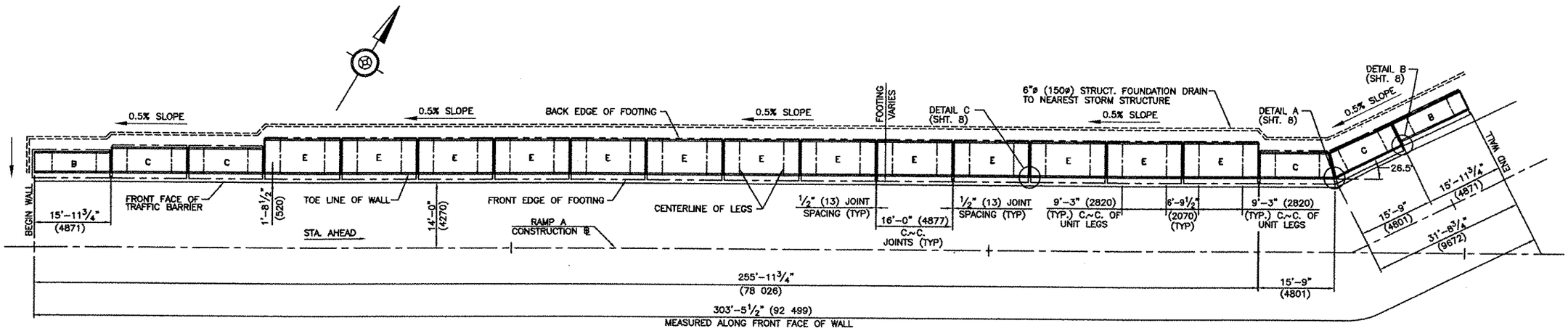

PLAN VIEW

(FOR CLARITY FOOTING AND BOTTOM UNIT SHOWN ONLY)
SCALE: 1" = 10'-0"

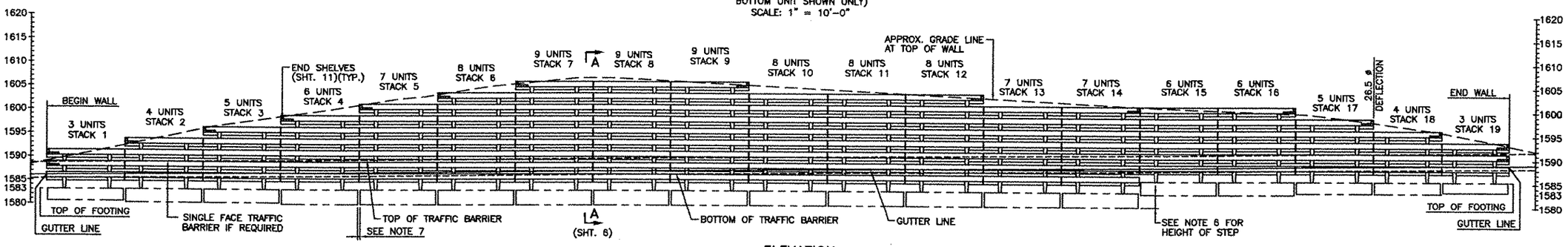

ELEVATION

SCALE: 1" = 10'-0"

VERTICAL CURVE DATA

PROPOSED RAMP A

P.V.I. STA. 297+50 (9+067.800)
ELEV. = 1583.5 (482.651)
V.C. = 500.00 (152.400)

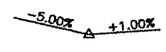

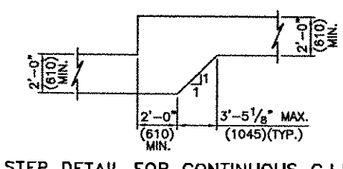

FOOTING STEP DETAIL FOR CONTINUOUS C.I.P. FOOTING

SCALE: NONE
(SEE NOTE 6)

NOTES:

1. FOR COMPOSITION OF EACH STACK OF EVERGREEN PRECAST CONCRETE UNITS. SEE SHEET 12
2. USE EITHER CAST-IN-PLACE CLASS A CEMENT CONCRETE FOOTING OR INDIVIDUAL PRECAST CLASS A CEMENT CONCRETE (SIZE AS PER DESIGN)
3. DESIGN FOOTING BASED ON THE ALLOWABLE FOUNDATION PRESSURES OR FACTORED BEARING RESISTANCE APPROVED BY THE DEPARTMENT
4. DIMENSIONS SHOWN IN PARENTHSIS ( ) ARE IN METRIC
5. WALL UNITS SHOWN FOR ILLUSTRATION PURPOSES ONLY
6. SET THE MAXIMUM HEIGHT OF STEP TO THE THICKNESS OF THE FOOTING WITH INDIVIDUAL CAST-IN-PLACE OR PRECAST OR TO 3'-5⅛" MAXIMUM WITH CONTINUOS CAST-IN-PLACE FOOTING.
7. ELIMINATE JOINTS BETWEEN THE FOOTINGS AND CAST FOOTING AS A CONTINUOUS FOOTING IF PREFERRED.

JUN 26 2003

COMMONWEALTH OF PENNSYLVANIA
DEPARTMENT OF TRANSPORTATION

EVERGREEN PRECAST CONCRETE
RETAINING WALL SYSTEM
STANDARD DRAWINGS

SAMPLE EVERGREEN
RETAINING WALL PLAN & ELEVATION – I

PADOT DWG # 92-047PE (1)

SHEET 4 of 14

File: SHEET4of14.dwg Date/Time: April 25, 2003 2:47 p.m. Scale: 1=1 Cdavis Xrefs:

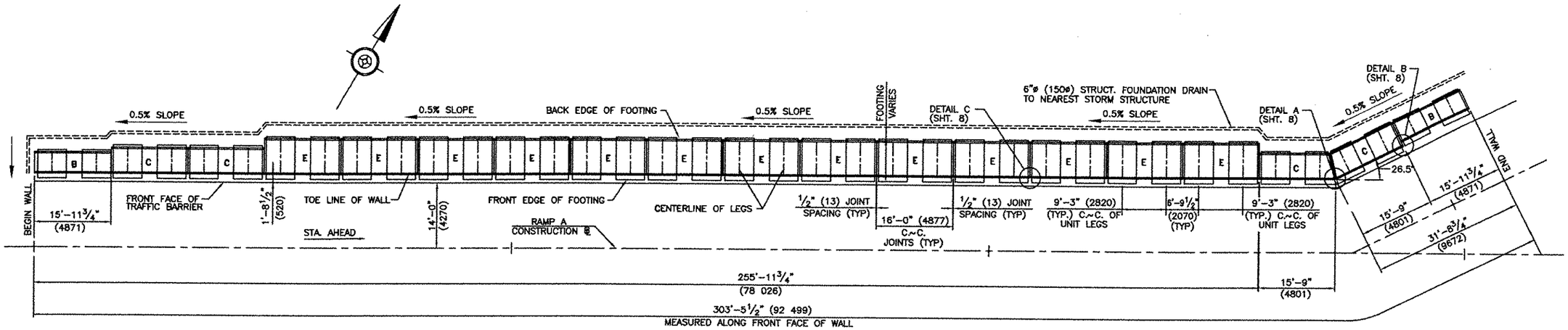

PLAN VIEW

(FOR CLARITY FOOTING AND BOTTOM UNIT SHOWN ONLY)
SCALE: 1" = 10'-0"

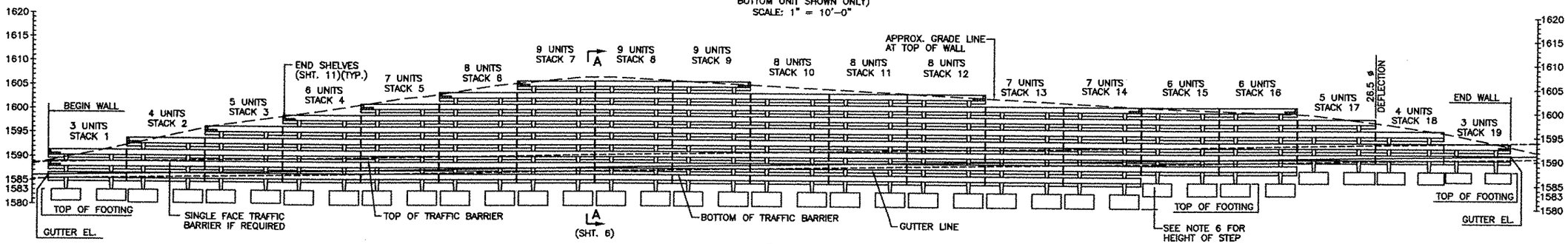

ELEVATION

SCALE: 1" = 10'-0"

NOTES:

1. FOR COMPOSITION OF EACH STACK OF EVERGREEN PRECAST CONCRETE UNITS. SEE SHEET 12
2. USE EITHER CAST-IN-PLACE CLASS A CEMENT CONCRETE FOOTING OR INDIVIDUAL PRECAST CLASS A CEMENT CONCRETE (SIZE AS PER DESIGN)
3. DESIGN FOOTING BASED ON THE ALLOWABLE FOUNDATION PRESSURES OR FACTORED BEARING RESISTANCE APPROVED BY THE DEPARTMENT
4. DIMENSIONS SHOWN IN PARENTHSIS ( ) ARE IN METRIC
5. WALL UNITS SHOWN FOR ILLUSTRATION PURPOSES ONLY
6. SET THE MAXIMUM HEIGHT OF STEP TO THE THICKNESS OF THE FOOTING WITH INDIVIDUAL CAST-IN-PLACE OR PRECAST FOOTING.

JUN 26 2003

COMMONWEALTH OF PENNSYLVANIA
DEPARTMENT OF TRANSPORTATION

EVERGREEN PRECAST CONCRETE
RETAINING WALL SYSTEM
STANDARD DRAWINGS

SAMPLE EVERGREEN
RETAINING WALL PLAN & ELEVATION – II

PADOT DWG # 92-047PE (1)

SHEET 5 of 14

File: SHEET5of14.dwg Date/Time: April 25, 2003 2:47 p.m. Scale: 1=1 Cdavis Xrefs:

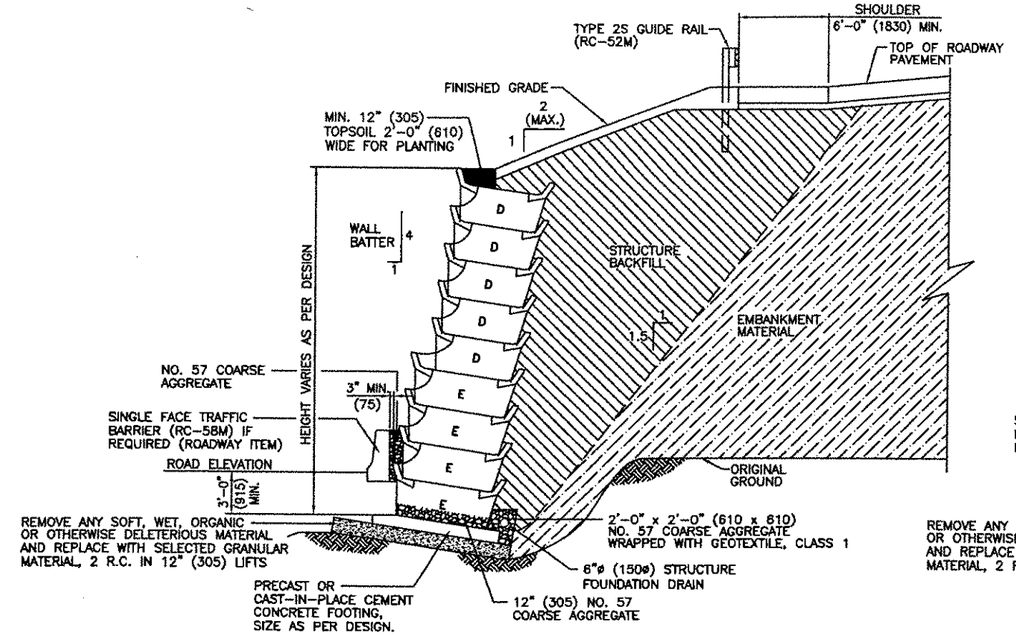

SECTION A-A (EMBANKMENT SECTION)

NOT TO SCALE

(WALL UNITS SHOWN FOR ILLUSTRATION PURPOSES ONLY)

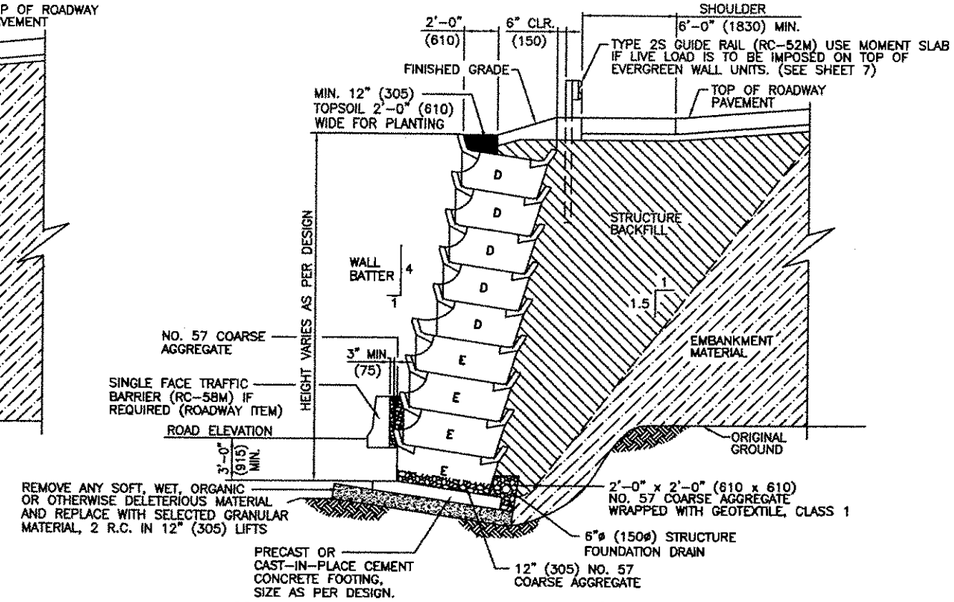

SECTION A-A (EMBANKMENT SECTION)
WITH ROADWAY ON THE TOP OF WALL

NOT TO SCALE

(WALL UNITS SHOWN FOR ILLUSTRATION PURPOSES ONLY)

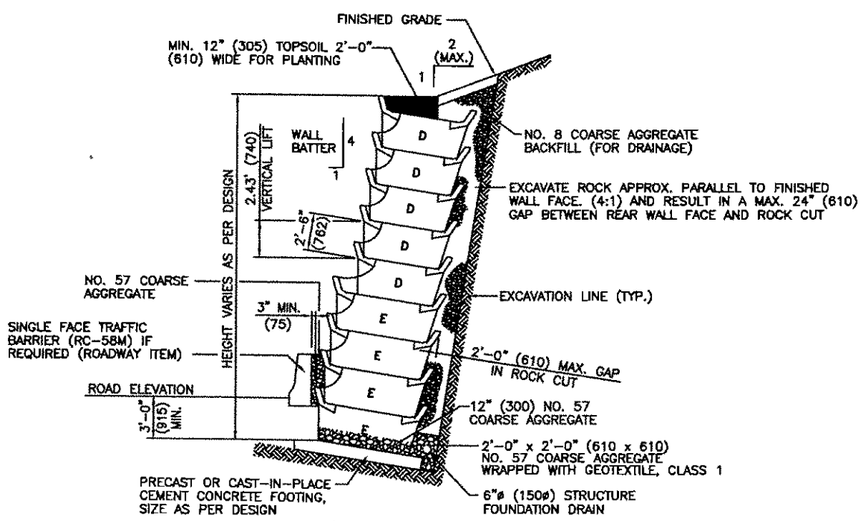

SECTION A-A (CUT SECTION)

NOT TO SCALE

(WALL UNITS SHOWN FOR ILLUSTRATION PURPOSES ONLY)

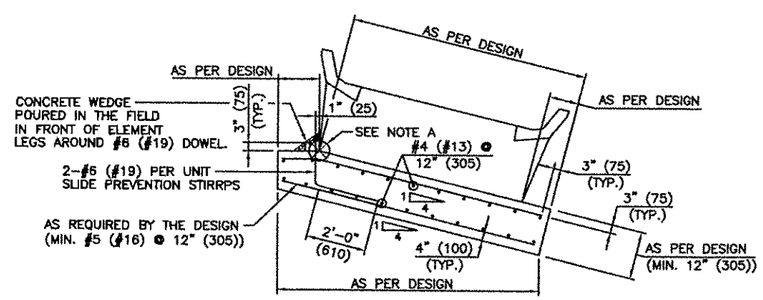

FOOTING & REINFORCEMENT DETAIL

NOT TO SCALE

NOTE A:
TOE LINE OF THE WALL, THIS LINE OCCURS WHERE THE FLAT TOP OF THE FOOTING BREAKS ON THE 4:1 SLOPE. THE LOCATION & ELEVATION OF THIS LINE IS MOST CRITICAL TO CORRECT INSTALLATION OF WALL.

JUN 26 2003

COMMONWEALTH OF PENNSYLVANIA
DEPARTMENT OF TRANSPORTATION

EVERGREEN PRECAST CONCRETE
RETAINING WALL SYSTEM
STANDARD DRAWINGS

SAMPLE CROSS SECTIONS
TYPICAL SECTIONS - I

PADOT DWG # 92-047PE (1)

SHEET 6 of 14

File: SHEET6of14.dwg Date/Time: April 25, 2003 2:49 p.m. Scale: 1=1 Cdovia Xrefs:

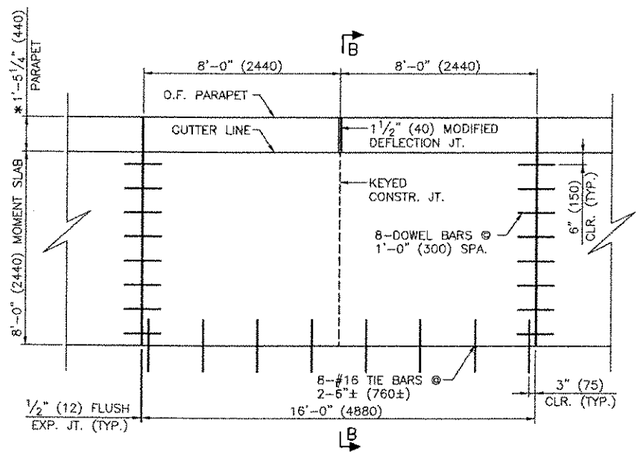

C.I.P. MOMENT SLAB AND PARAPET PLAN

NOT TO SCALE

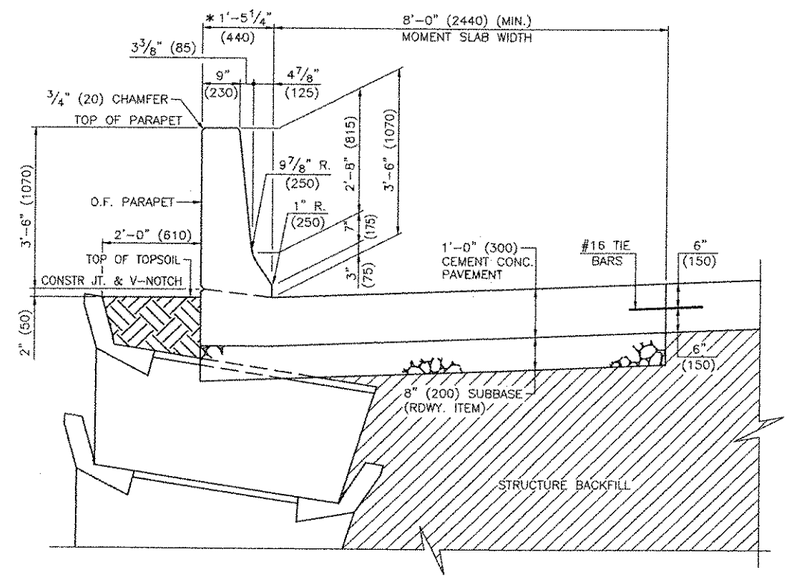

SECTION B-B

NOT TO SCALE

* – REVISE WIDTH AS REQUIRED TO ACCOMODATE SOUND BARRIER INSTALLATION (SEE BD-601M).

NOTES:

- FOR PARAPET REINFORCEMENT DETAIL, SEE BC-602M.
- WORK THIS SHEET WITH SHEET 6.

JUN 26 2003

COMMONWEALTH OF PENNSYLVANIA
DEPARTMENT OF TRANSPORTATION

EVERGREEN PRECAST CONCRETE
RETAINING WALL SYSTEM
STANDARD DRAWINGS

SAMPLE CROSS SECTIONS
TYPICAL SECTIONS – II

PADOT DWG # 92-047PE (1)

SHEET 7 of 14

File: SHEET7of14.dwg Date/Time: April 25, 2003 2:53 p.m. Scale: 1=1 Cdavis Xrefs:

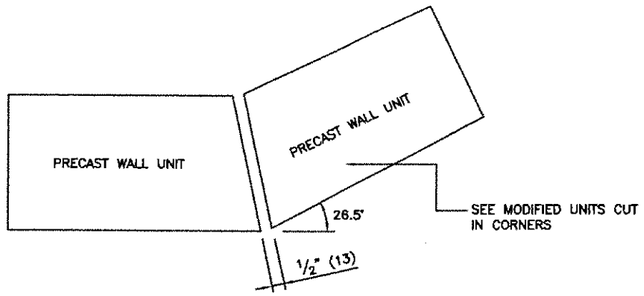

DETAIL A
NOT TO SCALE

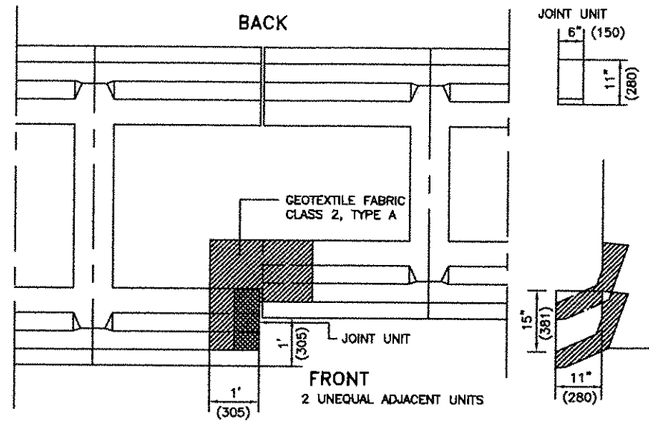

DETAIL B

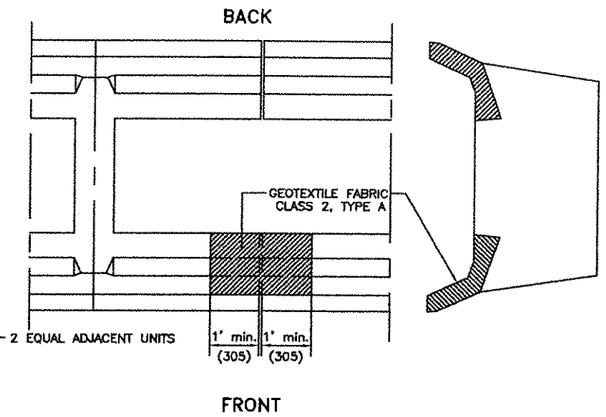

DETAIL C

JOINT COVER AND FILTER GEOTEXTILE FABRIC PLACEMENT DETAIL

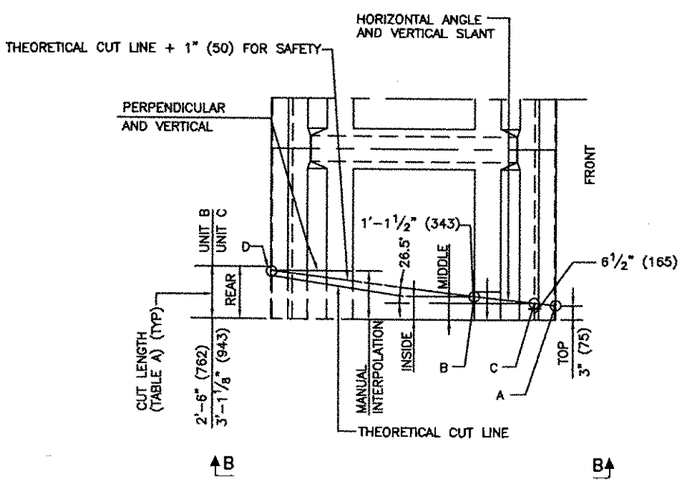

MODIFIED UNITS CUT IN CORNERS

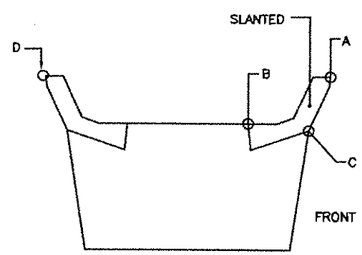

SECTION B–B

NOTE: CUT LENGTHS AT POINTS A, B, C, AND D AS PER COMPUTER PROGRAM'S MAIN MENU "CUTS IN CORNERS"

TABLE A – CUT LENGTHS

POINT	FORMULA
A	ℓ 3" (75) (MINIMUM)
B	ℓ + 1" (25) + 1'–7 1/8" (486) tan θ
C	ℓ + 1" (25) + 5" (127) tan θ
D	ℓ + 1" (25) + α tan θ

θ = Deflection Angle in Degrees
α value – Table B on Sheet 7

JUN 26 2003

COMMONWEALTH OF PENNSYLVANIA
DEPARTMENT OF TRANSPORTATION

EVERGREEN PRECAST CONCRETE
RETAINING WALL SYSTEM
STANDARD DRAWINGS
MISCELLANEOUS JOINT DETAILS

PADOT DWG # 92-047PE (1)

SHEET 8 of 14

File: SHEET8of14.dwg Date/Time: April 25, 2003 2:54 p.m. Scale: 1=1 Cdavis Xrefs:

TYPE OF UNITS

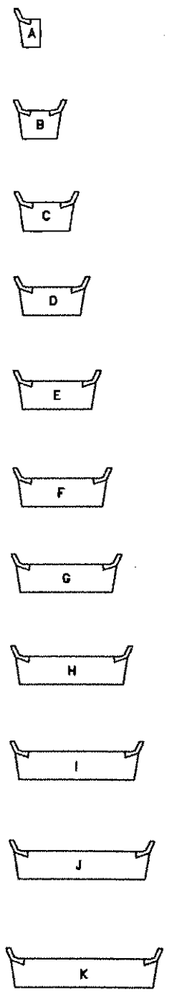

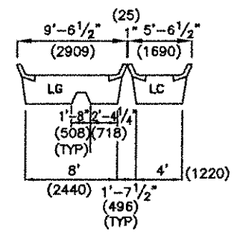

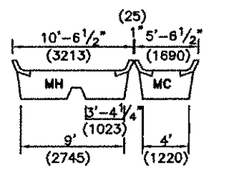

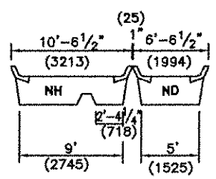

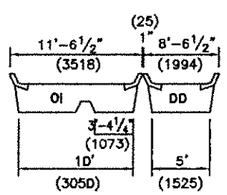

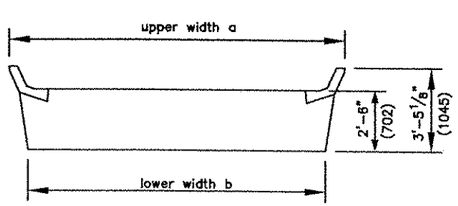

TYPICAL UNIT SECTION

TABLE B

DIMENSION element type	lower width b ft. (mm)	upper width a ft. (mm)	concrete weight / unit kips KN	earth fill volume / unit cu.yd. m^3	total weight concrete+earth (design weight) kips/ft. KN/m
A	1'-6" (458)	2'-3 1/4" (693)	2.457 (10.929)	1.9 (1.453)	0.47 (6.859)
B	3'-0" (915)	4'-6 1/2" (1385)	5.240 (23.308)	4.3 (3.288)	1.12 (16.345)
C	4'-0" (1220)	5'-6 1/2" (1690)	5.724 (25.461)	5.6 (4.282)	1.43 (20.869)
D	5'-0" (1525)	6'-6 1/2" (1995)	6.208 (27.613)	7.0 (5.352)	1.75 (25.539)
E	6'-0" (1830)	7'-6 1/2" (2300)	6.693 (29.771)	8.3 (6.346)	2.08 (30.355)
F	7'-0" (2135)	8'-6 1/2" (2605)	7.178 (31.928)	9.7 (7.416)	2.41 (35.171)
G	8'-0" (2440)	9'-6 1/2" (2910)	7.662 (34.081)	11.0 (8.410)	2.72 (39.696)
H	9'-0" (2745)	10'-6 1/2" (3215)	8.147 (36.238)	12.4 (9.481)	3.06 (44.658)
I	10'-0" (3050)	11'-6 1/2" (3520)	8.631 (38.391)	13.7 (10.475)	3.39 (39.474)
J	11'-0" (3355)	12'-6 1/2" (3825)	9.115 (40.544)	15.1 (11.545)	3.73 (54.436)
K	12'-0" (3660)	13'-6 1/2" (4130)	9.600 (42.701)	16.5 (12.615)	4.08 (59.543)
L=G+C	13'-7 1/2" (4153)	14'-2" (4623)	13.386 (59.541)	16.6 (12.692)	4.15 (60.565)
M=H+C	14'-7 1/2" (4458)	16'-2" (4928)	13.871 (61.698)	18.0 (13.762)	4.49 (65.527)
N=H+D	15'-7 1/2" (4763)	17'-2" (5233)	14.355 (63.851)	19.3 (14.756)	4.81 (70.197)
O=I+D	16'-7 1/2" (5068)	18'-2" (5538)	14.839 (66.004)	20.7 (15.826)	5.14 (75.013)

TABLE C

UNIT TYPE	w ft. (mm)	x ft. (mm)
S1B	4'-6 1/2" (1385)	3'-9 15/16" (1167)
S1C	5'-6 1/2" (1689)	4'-9 15/16" (1472)
S1D	6'-6 1/2" (1994)	5'-9 15/16" (1777)
S1E	7'-6 1/2" (2299)	6'-9 15/16" (2082)
S1F	8'-6 1/2" (2604)	7'-9 15/16" (2387)
S1G	9'-6 1/2" (2909)	8'-9 15/16" (2692)
S1H	10'-6 1/2" (3213)	9'-9 15/16" (2997)
S1I	11'-6 1/2" (3518)	10'-9 15/16" (3302)
S1J	12'-6 1/2" (3823)	11'-9 15/16" (3607)
S1K	13'-6 1/2" (4128)	12'-9 15/16" (3912)

END SHELVES DETAIL

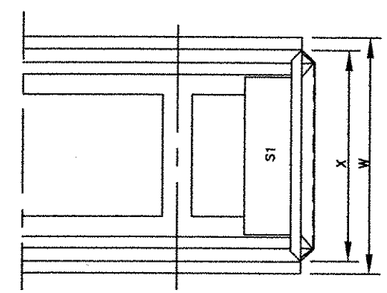

PLAN

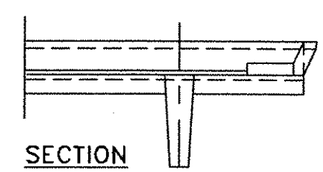

SECTION

NOTES:

- FOR MORE PRECAST UNIT DIMENSIONS AND REINFORCEMENT INFORMATION SEE SHEET 10.
- DIMENSIONS SHOWN IN PARENTHESIS ( ) ARE IN MILLIMETER UNLESS AS NOTED.
- FOR END SHELVES DETAIL SEE SHEET 11.

JUN 26 2003

COMMONWEALTH OF PENNSYLVANIA
DEPARTMENT OF TRANSPORTATION

EVERGREEN PRECAST CONCRETE
RETAINING WALL SYSTEM
STANDARD DRAWINGS

EVERGREEN PRECAST CONCRETE
UNIT DIMENSIONS AND DESIGN INFORMATION

PADOT DWG # 92-047PE (1)

SHEET 9 of 14

File: SHEET9of14.dwg Date/Time: April 25, 2003 2:54 p.m. Scale: 1=1 Cdavis Xrefs:

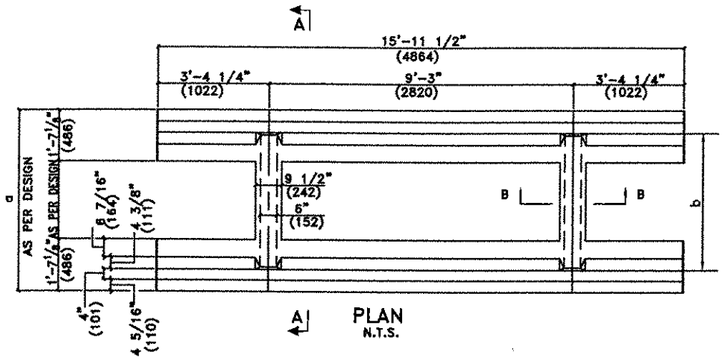

PLAN
N.T.S.

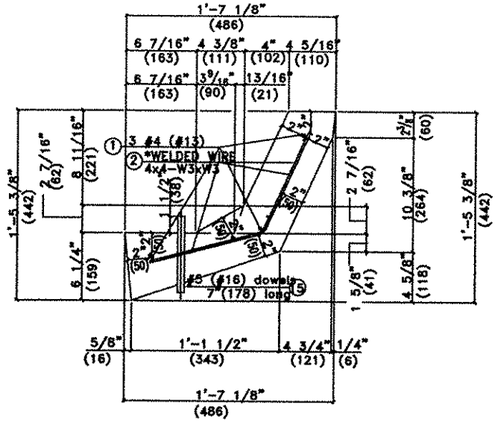

CROSS SECTION
N.T.S.

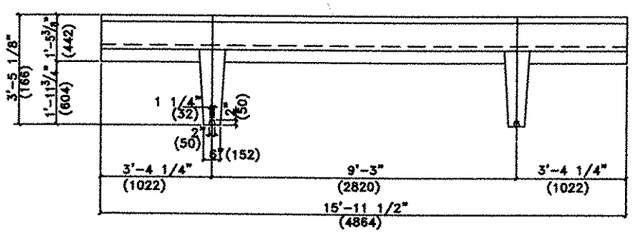

ELEVATION
N.T.S.

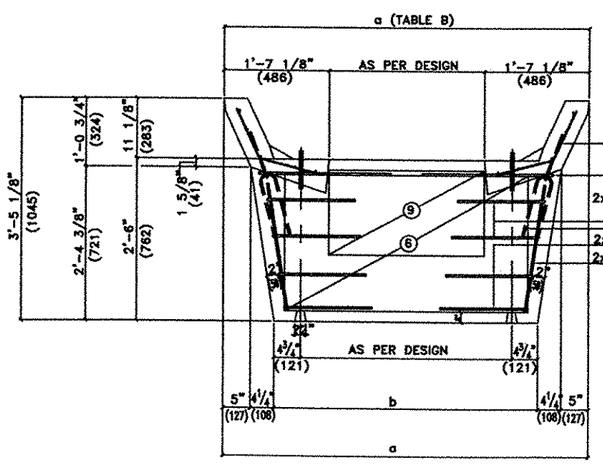

SECTION A-A
N.T.S.

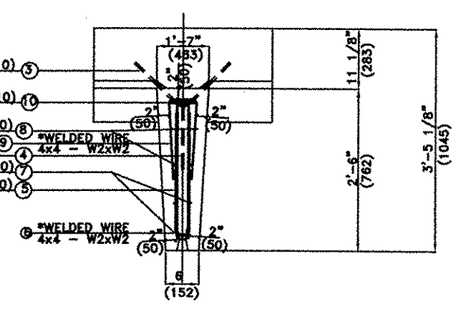

SECTION B-B
N.T.S.

Item No.	Pieces	Bar No. #	Cutting Length (ft.)	Cutting Length (mm)	Form	c	Total length (ft.)	Total length (mm)	Total weight (lbs)	Total weight (kg)
1	2x3	4(13)	15.62	4761		15.62' (4761)	93.72	28 566	62.60	28.40
2	2 *WELDED WIRE 4x4-W3xW3		15.66(4773)x1.90(579)=27.02					2.51□ m	33.06	15.00
3	2x2	3(10)	2.0	610		–	8.0	2438	3.00	1.36
4	2x2	3(10)	2.25	686		–	9.02	2749	3.39	1.54
5	2x2	3	2.17	662		–	8.70	2652	3.27	1.49
6	2 *WELDED WIRE 4x4-W2xW2		4.475(1364)xd				4.475d	1.364d	3.65d	5.45d
7	2x4	3(10)	2.811	857			22.488	6855	8.45	3.83
8	2x4	3(10)	3.00	915			24.00	7315	9.02	4.09
9	2 *WELDED WIRE 4x4-W2xW2		3.061(933)xe				3.061e	933e	2.50e	3.73e
10	2x2	3(10)	4.405	1343		–	17.62	5371	6.62	3.00
15	2x2	5(16)	0.58	177		0.58' (177)	2.32	707	2.41	1.10
								TOTAL	132.82	59.81
									+3.65d	+5.45d
									+2.50e	+3.73e

Shape

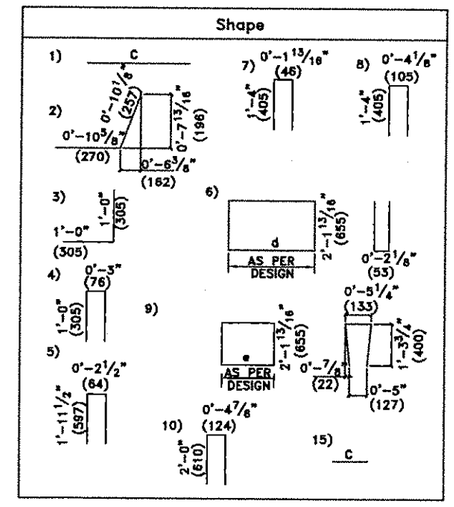

*NOTE

- WELDED WIRE 4X4-W2XW2 (102X102XMW12.9XMW12.9)
- WELDED WIRE 4X4-W3XW3 (102X102XMW19.4XMW19.4)

NOTE:

- DIMENSIONS SHOWN IN PARENTHESIS ( ) ARE IN MILLIMETERS.
- FOR a AND b VALUES – SEE TABLE B ON SHEET 9.
- d=b-0.31'(96)
- e=b-1.775'(541)

JUN 26 2003

COMMONWEALTH OF PENNSYLVANIA
DEPARTMENT OF TRANSPORTATION

EVERGREEN PRECAST CONCRETE
RETAINING WALL SYSTEM
STANDARD DRAWINGS

EVERGREEN PRECAST CONCRETE
UNIT DIMENSIONS AND REINFORCEMENT DETAILS

PADOT DWG # 92-047PE (1)

SHEET 10 of 14

File: SHEET10of14.dwg Date/Time: April 25, 2003 2:55 p.m. Scale: 1=1 Cdovis Xrefs:

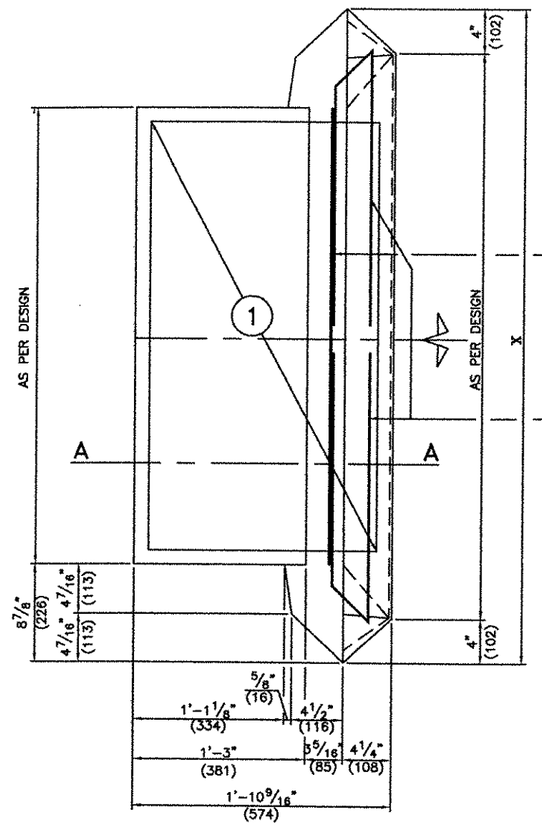

PLAN VIEW

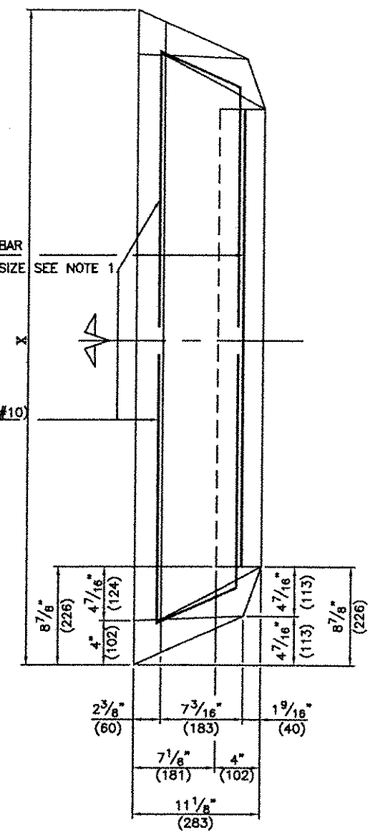

ELEVATION

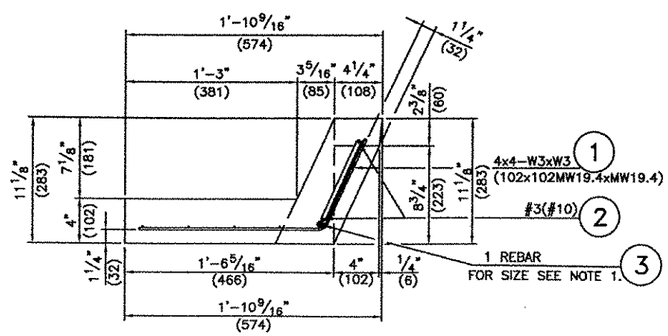

SECTION A-A

ITEM NO.	PIECES	BAR NO.	CUTTING LENGTH (ft)	CUTTING LENGTH (mm)	FORM	a (ft)	a (mm)	TOTAL LENGTH (ft)	TOTAL LENGTH (mm)	TOTAL WEIGHT (lb)	TOTAL WEIGHT (kg)
ELEMENT TYPE		S1B									
1	*WELDED	WIRE 4x4-W3xW3				2.145'	(654) x	1.92'	(586)		
2		#3(#10)	3.80'	1159	2	–		7.60'	2317	2.86	1.29
ELEMENT TYPE		S1C									
1	*WELDED	WIRE 4x4-W3xW3				3.145'	(959) x	1.92	(586)		
2	2	#3(#10)	3.80'	1159	2	–		7.60'	2317	2.86	1.29
ELEMENT TYPE		S1D									
1	*WELDED	WIRE 4x4-W3xW3				4.145'	(1264) x	1.92	(586)		
2	2	#3(#10)	3.80'	1159	2	–		7.60'	2137	2.86	1.29
ELEMENT TYPE		S1E									
1	*WELDED	WIRE 4x4-W3xW3				5.145'	(1568) x	1.92	(586)		
2	2	#3(#10)	3.80'	1159	2	–		7.60'	2137	2.86	1.29
ELEMENT TYPE		S1F									
1	*WELDED	WIRE 4x4-W3xW3				6.145'	(1873) x	1.92	(586)		
2	2	#3(#10)	3.80'	1159	2	–		7.60'	2137	2.86	1.29
3	1	#3(#10)	6.35'	1936	3	6.35'	1936	6.35'	1936	2.38	1.08
ELEMENT TYPE		S1G									
1	*WELDED	WIRE 4x4-W3xW3				7.15'	(2180) x	1.92	(586)		
2	2	#3(#10)	3.80'	1159	2	–		7.60'	2137	2.86	1.29
3	1	#3(#10)	7.35'	2241	3	7.35'	2241	7.35'	2241	2.76	1.26
ELEMENT TYPE		S1H									
1	*WELDED	WIRE 4x4-W3xW3				8.145'	(2483) x	1.92	(586)		
2	2	#3(#10)	3.80'	1159	2	–		7.60'	2137	2.86	1.29
3	1	#3(#10)	8.35'	2545	3	8.35'	2545	8.35'	2545	3.13	1.42
ELEMENT TYPE		S1I									
1	*WELDED	WIRE 4x4-W3xW3				9.145'	(2788) x	1.92	(586)		
2	2	#3(#10)	3.80'	1159	2	–		7.60'	2137	2.86	1.29
3	1	#3(#10)	9.35'	2850	3	9.35'	2850	9.35'	2850	9.75	4.43
ELEMENT TYPE		S1J									
1	*WELDED	WIRE 4x4-W3xW3				10.145'	(3093) x	1.92	(586)		
2	2	#3(#10)	3.80'	1159	2	–		7.60'	2137	2.86	1.29
3	1	#5(#16)	10.35'	3155	3	10.35'	3155	10.35'	3155	10.79	4.90
ELEMENT TYPE		S1K									
1	*WELDED	WIRE 4x4-W3xW3				11.145'	(3397) x	1.92	(586)		
2	2	#3(#10)	3.80'	1157	2	–		7.60'	2137	2.86	1.29
3	1	#5(#16)	11.35'	3460	3	11.35'	3460	11.35'	3460	11.83	5.37

SHAPE

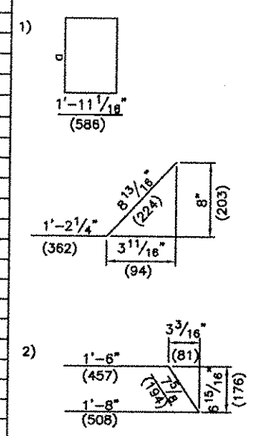

* WELDED WIRE 4x4-W3xW3 (102x102 MW19.4xMW19.4)

ELEMENT TYPE	X (ft.)	X (mm)
S1B	3'-9 15/16"	1167
S1C	4'-9 15/16"	1472
S1D	5'-9 15/16"	1777
S1E	6'-9 15/16"	2082
S1F	7'-9 15/16"	2386
S1G	8'-9 15/16"	2691
S1H	9'-9 15/16"	2996
S1I	10'-9 15/16"	3300
S1J	11'-9 15/16"	3605
S1K	12'-9 15/16"	3910

NOTE 1:
#3(#10), EXCEPT #5(#16) FOR TYPES S1J AND S1K. (SEE TABLE ON THIS SHEET)

JUN 26 2003

COMMONWEALTH OF PENNSYLVANIA
DEPARTMENT OF TRANSPORTATION

EVERGREEN PRECAST CONCRETE
RETAINING WALL SYSTEM
STANDARD DRAWINGS

END SHELF DETAIL

PADOT DWG # 92-047PE (1)

SHEET 11 of 14

File: SHEET11of14.dwg Date/Time: April 25, 2003 2:37 p.m. Scale: 1=1 Cdavis Xrefs:

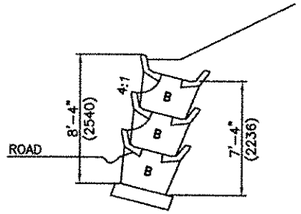

3 UNITS

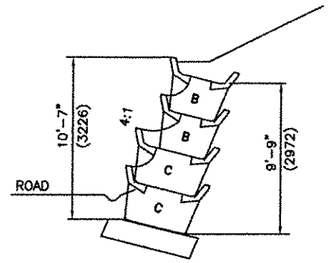

4 UNITS

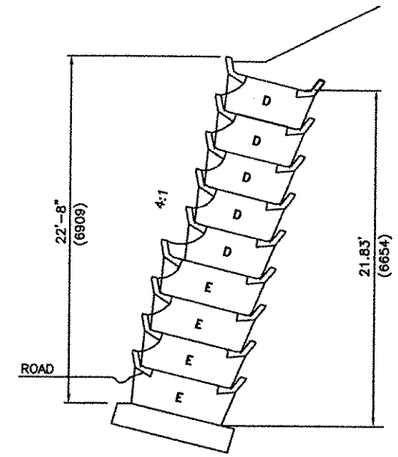

9 UNITS

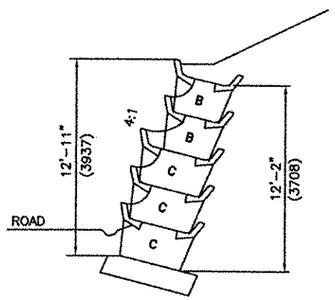

5 UNITS

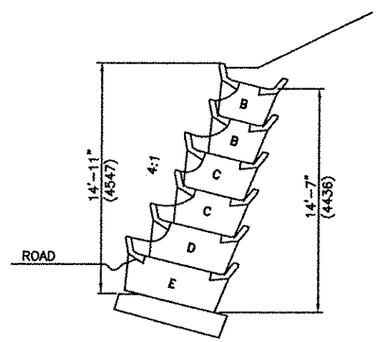

6 UNITS

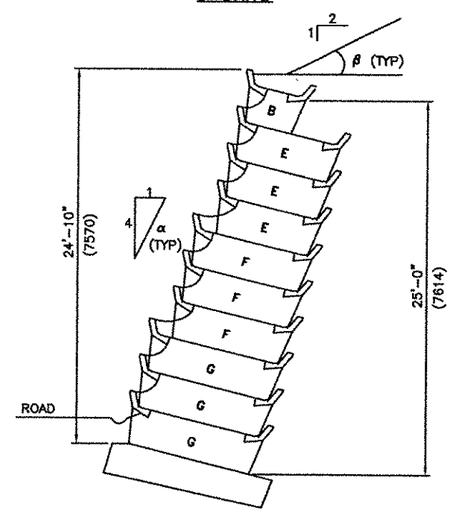

10 UNITS

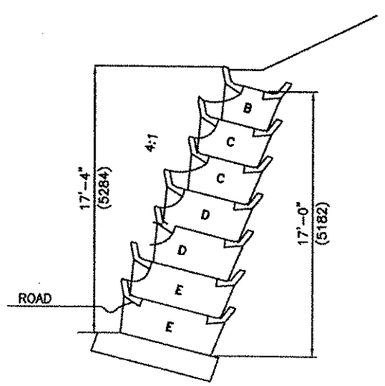

7 UNITS

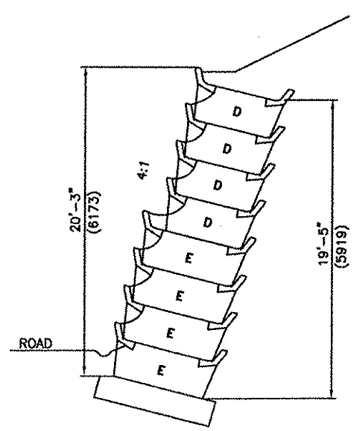

8 UNITS

Backfill Material:

Effective Angle of Friction, ϕ, = 34 degrees
Cohesive Strength, c, = 0.0 KSF (0 Kg/m^3)
Moist Unit Weight of Soil, γ, = 120 pcf (1923 kg/m^3)
Wall Battered Slope (α) = 14.04 degrees
Embankment Slope (β) = 25.5 degrees (2:1 Slope)

Note:
Design the footing based on the allowable foundation pressure or factored bearing resistance approved by the Department.

JUN 26 2003

COMMONWEALTH OF PENNSYLVANIA
DEPARTMENT OF TRANSPORTATION

EVERGREEN PRECAST CONCRETE
RETAINING WALL SYSTEM
STANDARD DRAWINGS

SAMPLE CROSS SECTIONS FOR 4:1 BATTERED WALL - I

PADOT DWG # 92-047PE (1)

SHEET 12 of 14

File: SHEET12of14.dwg Date/Time: April 25, 2003 2:57 p.m. Scale: 1=1 Cdevie Xrefs:

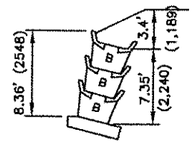

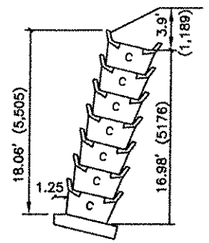

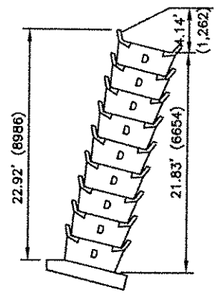

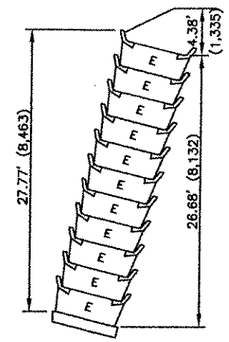

Backfill Material:

Effective Angle of Friction, ϕ, = 34 degrees
Cohesive Strength, c, = 0.0 KSF (0 Kg/m^3)
Moist Unit Weight of Soil, γ, = 120 pcf (1923 kg/m^3)
Wall Battered Slope (α) = 14.04 degrees
Embankment Slope (β) = 25.5 degrees (2:1 Slope)

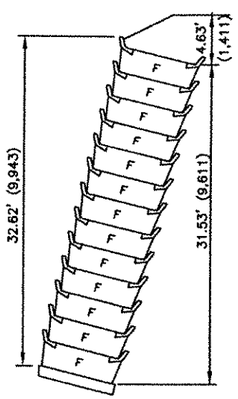

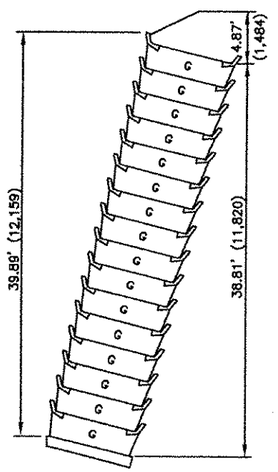

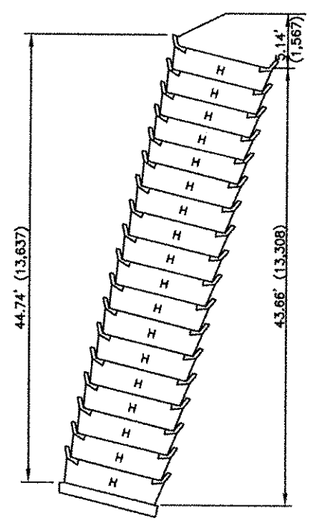

NOTE: DESIGN THE FOOTING BASED ON THE ALLOWABLE FOUNDATION PRESSURE OR FACTORED BEARING RESISTANCE APPROVED BY THE DEPARTMENT.

JUN 26 2003

COMMONWEALTH OF PENNSYLVANIA
DEPARTMENT OF TRANSPORTATION

EVERGREEN PRECAST CONCRETE
RETAINING WALL SYSTEM
STANDARD DRAWINGS

SAMPLE CROSS SECTIONS FOR 4:1 BATTERED WALL – II

PADOT DWG # 92-047PE (1)

SHEET 13 of 14

File: SHEET13of14.dwg Date/Time: April 25, 2003 2:58 p.m. Scale: 1=1 Cdovis Xrefs:

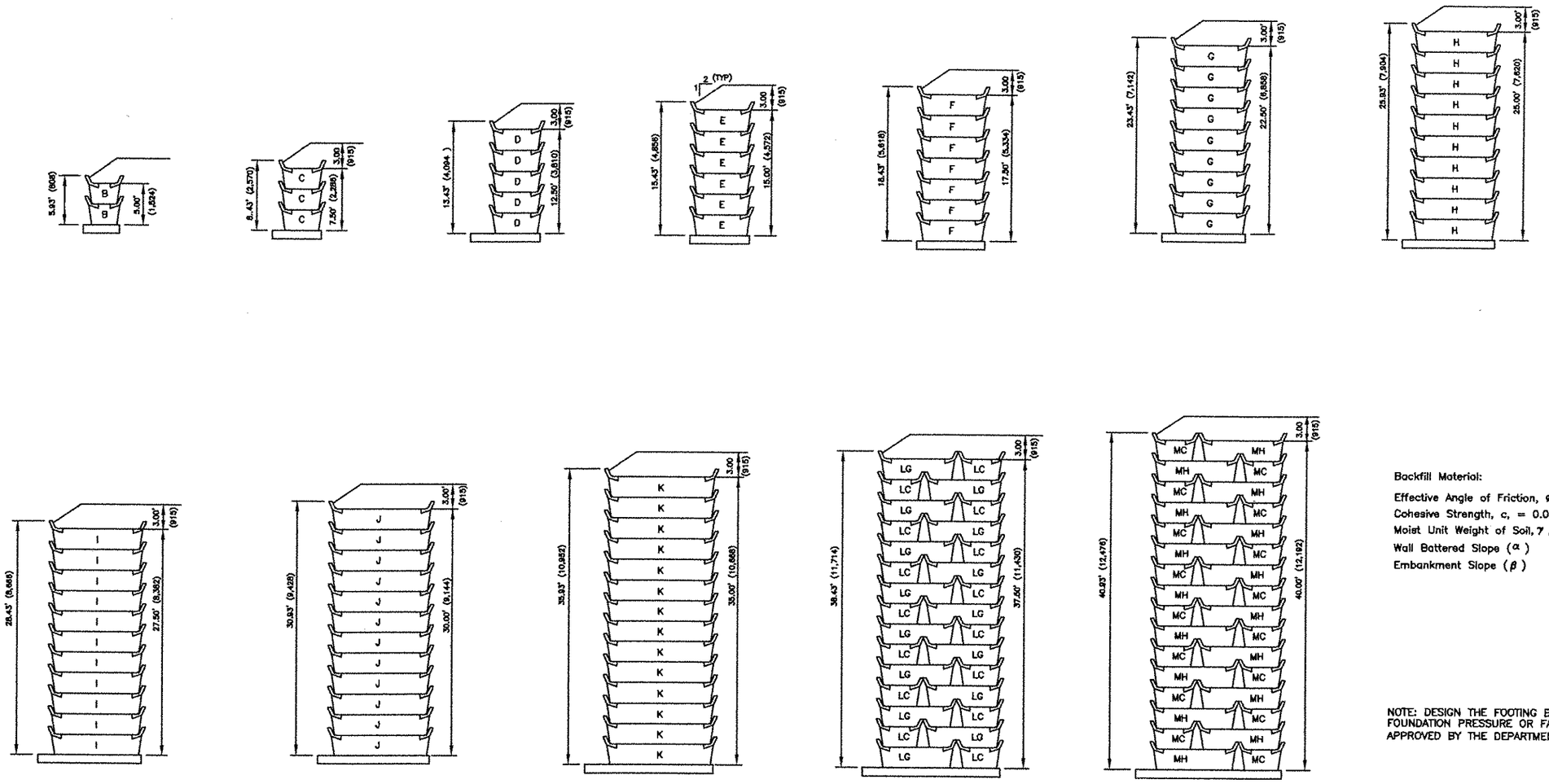

Backfill Material:

Effective Angle of Friction, ϕ, = 34 degrees
Cohesive Strength, c, = 0.0 KSF (0 Kg/m^3)
Moist Unit Weight of Soil, γ, = 120 pcf (1923 kg/m^3)
Wall Battered Slope (α) = 14.04 degrees
Embankment Slope (β) = 25.5 degrees (2:1 Slope)

NOTE: DESIGN THE FOOTING BASED ON THE ALLOWABLE FOUNDATION PRESSURE OR FACTORED BEARING RESISTANCE APPROVED BY THE DEPARTMENT.

JUN 26 2003

COMMONWEALTH OF PENNSYLVANIA
DEPARTMENT OF TRANSPORTATION

EVERGREEN PRECAST CONCRETE
RETAINING WALL SYSTEM
STANDARD DRAWINGS

SAMPLE CROSS SECTIONS FOR VERTICAL WALLS

PADOT OWG # 92-047PE (1)

SHEET 14 of 14

File: SHEET14of14.dwg Date/Time: April 25, 2003 2:58 p.m. Scale: 1=1 Cdavis Xrefs:

Product:

MSE Wall Reinforced Earth Wall
Rectangular Panels
Shop Drawings
English and Metric Versions

Approval Date:	**Initiated By SOL:**
December 13, 2004	Not Applicable

Application/Use:

Reinforced Earth Walls Rectangular Panels manufactured by the Reinforced Earth Co. of Vienna, Virginia 22182 (703-821-1175) have been approved for use as an alternate to Standard Reinforced Earth Wall Panels.

Since these are large Reinforced Earth Wall Panels, due to their size, their construction procedures are slightly different from
those of regular panels (recommended by the Reinforced Earth Co.) and are as follows:

- Panels at the bottom row need two braces instead of one alternate panel because of the increased size.
- Panels need to be securely clamped before being released.
- Occasionally shimming may be needed to adjust the vertical and horizontal joints.
- Heavier rated rigging is necessary due to the increased size and weight.

Specifications:

None.

Standard Drawings:

Rectangular Panel Shop Drawings
(PADOT Drawing #04-601-BQAD (dated December 8, 2004).
These drawings can be used as Standard approved shop drawings for your shop drawing approval. Separate shop drawings will

be required for any panels, which are not covered in the standard approved shop drawings. These separate drawings must be reviewed and/or approved by the District on a project by project basis.

Comment:

The Department's Specifications, Section 107.03 of Publication 408 is applicable on all projects for the use of these panels.

Federal Highway Administration approval has been secured for these Panels.

The Reinforced Earth Company's Rectangular Panels must be fabricated in approved P/C plants.

The following approved product, PADOT Drawing #98-601-BQAD (Shop Drawings) listed in the INDEX LIST is now **DELETED:**

Product	
15	MSE Wall-Reinforced Earth Wall New Rectangular Panels – Standard Detail and Shop Drawings – English Metric Version

The Reinforced Earth Company

8614 Westwood Center Drive Suite 1100, Vienna, Virginia 22182 (703) 821-1175

STANDARD PRECAST PANEL SHOP DRAWINGS
4.92'x 9.84' RECTANGULAR PANELS

PANEL GENERAL NOTES

1) REINFORCING BARS SHALL BE ASTM A615 GRADE 60. (EPOXY COATED PER PENN. D.O.T. PUBLICATION 408 SEC. 709 (A) 1).

2) CONCRETE FOR PRECAST PANELS SHALL HAVE A MINIMUM COMPRESSIVE STRENGTH AFTER 28 DAYS OF 4000 p.s.i., OR AS REQUIRED BY THE PROJECT SPECIAL PROVISIONS.

3) TIE STRIPS SHALL BE STEEL ASTM A1011 SS, GRADE 50 (FORMERLY ASTM A570) (GALVANIZED PER ASTM A-123).

4) ALL FRONT EDGES OF PANELS SHALL HAVE A 1/2" CHAMFER.

5) TIE STRIPS SHALL BE PLACED WITHIN 1" OF THE DIMENSION SHOWN ON THE FABRICATION DRAWINGS.

6) PANEL DESIGN THICKNESS IS 5 1/2". THE QUANTITY OF CONCRETE WILL INCREASE TO ACCOMODATE ANY ARCHITECTURAL SURFACE FINISH THAT MAY BE SPECIFIED.

7) VERTICAL REINFORCING BARS SHALL BE PLACED 1 1/2" (MIN.) CLEAR FROM THE BACK FACE OF THE PANEL.

8) ALL REINFORCING BARS SHALL BE STOPPED 1 1/2" (MIN.) CLEAR FROM ANY EDGE OF PANEL UNLESS NOTED ON INDIVIDUAL FABRICATION DRAWING.

9) ALL INDIVIDUAL FABRICATION DRAWINGS ARE SHOWN BACK FACE.

10) IF COPING DOWELS ARE REQUIRED, USE 2'-0" LONG, #4 REBAR, SIX (6) PER FULL-WIDTH PANEL.

11) KEY TO PIECE MARK:

A L-6-9.50

- A — BASIC PANEL TYPE
- L — PANEL MODIFICATION
- 6 — No. OF TIE STRIPS PER PANEL
- 9.50 — PANEL WIDTH DEFLECTION ANGLE (FOR BENT PANELS)

△1

PRECAST PANEL DRAWING INDEX

SHEET NO.	PANEL TYPE	SHEET NO.	PANEL TYPE	SHEET NO.	PANEL TYPE
S1	GENERAL NOTES	S10	G-9-R4	S14	N-15-R4
S2	DETAILS	S10	G-10-R4	S14	N-17-R4
S3	HORIZONTAL SECT.	S10	G-11-R4	S15	N-18-R4
S4	VERTICAL SECT.	S10	G-12-R4	S15	N-20-R4
S5	STD. REBAR	S11	G-13-R4	S15	N-21-R4
S6	STD. REBAR	S11	K-7-R4	S15	S-4-R4
S7	A-6-R4	S11	K-8-R4	S15	S-5-R4
S7	A-7-R4	S11	K-10-R4	S15	S-6-R4
S7	A-8-R4	S11	K-12-R4	S15	S-7-R4
S7	A-9-R4	S11	K-14-R4	S15	S-8-R4
S7	A-10-R4	S11	K-15-R4	S15	S-9-R4
S7	A-11-R4	S11	K-16-R4		
S7	A-12-R4	S11	K-17-R4		
S7	A-13-R4	S11	K-18-R4		
S7	A-14-R4	S11	K-19-R4		
S7	A-15-R4	S12	K-20-R4		
S7	A-16-R4	S12	K-21-R4		
S8	A-17-R4	S12	L-9-R4		
S8	A-18-R4	S12	L-10-R4		
S8	A-19-R4	S12	L-12-R4		
S8	A-20-R4	S12	L-13-R4		
S8	A-21-R4	S12	L-14-R4		
S8	C-3-R4	S12	L-15-R4		
S8	C-4-R4	S12	L-17-R4		
S8	C-5-R4	S12	L-18-R4		
S8	C-6-R4	S12	P-9-R4		
S8	D-3-R4	S13	P-10-R4		
S8	D-4-R4	S13	P-12-R4		
S9	D-5-R4	S13	P-13-R4		
S9	D-6-R4	S13	P-14-R4		
S9	D-7-R4	S13	P-15-R4		
S9	E-4-R4	S13	P-17-R4		
S9	E-5-R4	S13	P-18-R4		
S9	E-6-R4	S13	M-9-R4		
S9	E-7-R4	S13	M-10-R4		
S9	E-8-R4	S13	M-11-R4		
S9	E-9-R4	S13	M-13-R4		
S9	F-6-R4	S14	M-14-R4		
S9	F-7-R4	S14	M-16-R4		
S10	F-8-R4	S14	M-17-R4		
S10	F-9-R4	S14	M-18-R4		
S10	F-10-R4	S14	M-20-R4		
S10	F-11-R4	S14	N-9-R4		
S10	G-6-R4	S14	N-11-R4		
S10	G-7-R4	S14	N-12-R4		
S10	G-8-R4	S14	N-14-R4		

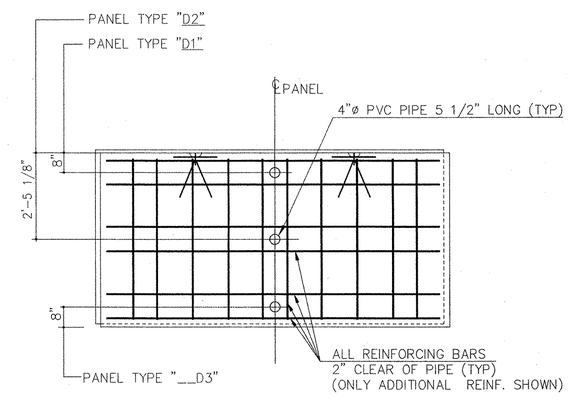

WEEPHOLE LOCATION KEY
(STD. "A" PANEL ONLY- IF REQUIRED)

PENNSYLVANIA DEPARTMENT OF TRANSPORTATION RECOMMENDED
CHIEF BRIDGE ENGINEER

DEC 13 2004

COMMONWEALTH OF PENNSYLVANIA REGISTERED PROFESSIONAL JOHN E. SANKEY ENGINEER NO. 34184

PADOT DRAWING #04-601 B9AD

PENNA. DEPARTMENT OF TRANSPORTATION
PRECAST CONCRETE WALL PANELS
COUNTY
S.R. _____ SECTION _____
SEG _____ OFFSET _____
CONTRACTOR: REINFORCED EARTH RETAINING WALLS
MANUFACTURER:
THE REINFORCED EARTH CO.
VIENNA, VA

GENERAL NOTES

DRAWN BY: PHL	DATE: 8/31/04	REVISED:	SHEET
CHECKED BY: JES	DATE: 8/31/04		S1 OF S15
REFERENCE DRAWING: S1			

REV.	DATE	DESCRIPTION
△2	12/9/04	REV. SHEETS. S4 AND S6
△1	12/3/04	REV. PER PDOT COMMENTS (11/29/04)

The Reinforced Earth Company
8614 Westwood Center Drive Suite 1100, Vienna, Virginia 22182 (703) 821-1175

"REINFORCED EARTH" is the registered trademark of The Reinforced Earth Company.

CYW/RR 12/13/04
RE-XXXXXX DIST- X
S1PA.dwg

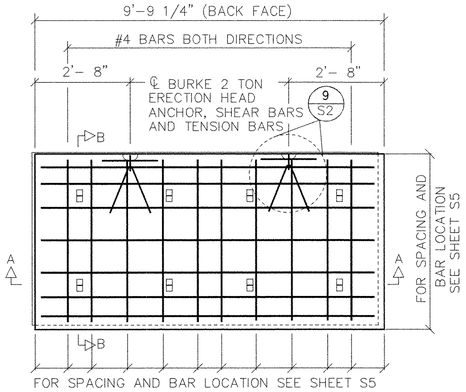

ELEVATION – BACK FACE

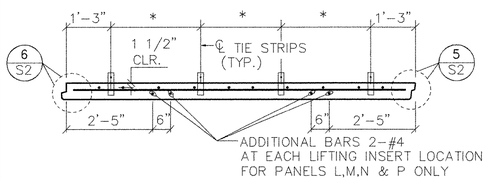

* FOR TIE STRIP SPACING SEE SHEET S3

SECTION A–A
SCALE: 1/2" = 1'-0"

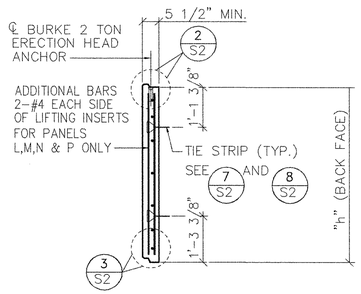

SECTION B–B

PANEL TYPE	"h"
A	4'-10 1/4"
C	1'-9 1/2"
D	2'-4 3/4"
E/S	3'- 0 1/4"
F	3'-7 1/2"
G	4'-3"
K	5'-5 3/4"
L/P	6'-1"
M	6'-8 1/2"
N	7'-3 3/4"

NOTE:
CONCRETE COVER ON ALL REINFORCEMENT TO BE 1 1/2" MIN.

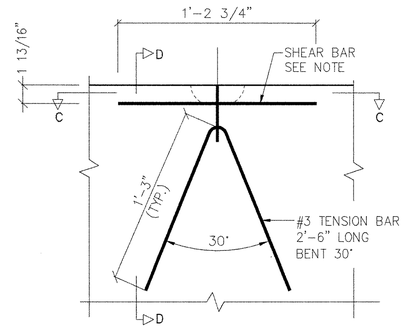

9 S2 TENSION BAR DETAIL

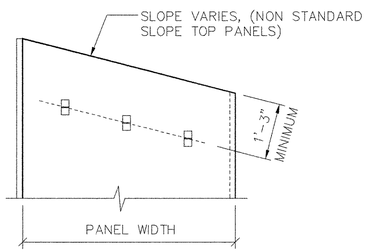

TIE STRIP LOCATIONS
(NON-STANDARD SLOPE TOP PANELS)

⊕ COVER ALL JOINTS BETWEEN PANELS ON BACK SIDE OF THE WALL WITH GEOTEXTILE FABRIC CLASS 2. TYPE "A". APPLY ADHESIVE COATING ON PANELS ONLY AND NOT ON GEOTEXTILE FABRIC. DO NOT APPLY ADHESIVE WITHIN 2" OF THE JOINT.

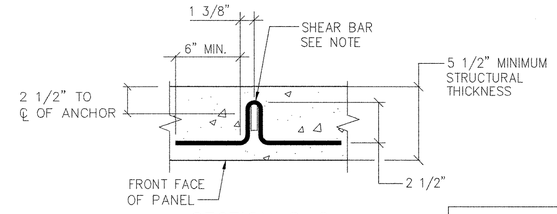

SECTION C–C
(#79140)

NOTE:
SHEAR BAR AS PROVIDED BY BURKE FOR USE WITH 2 TON, TWO HOLE, ERECTION HEAD ANCHOR SHEAR BAR #79140.

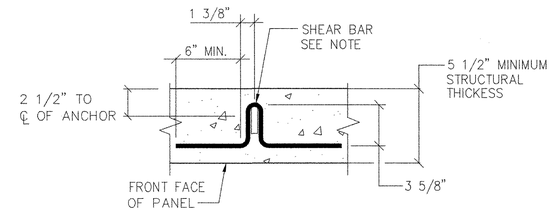

SECTION C–C
(#79141)

NOTE:
SHEAR BAR AS PROVIDED BY BURKE FOR USE WITH 4 TON, TWO HOLE, ERECTION HEAD ANCHOR SHEAR BAR #79141.

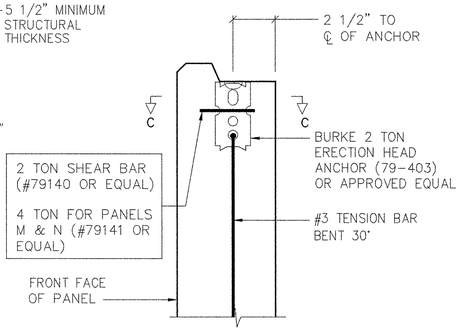

SECTION D–D
ERECTION HEAD
SCALE 3"=1'

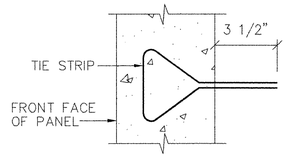

7 S2 SECTION TIE STRIP EMBEDED IN PANEL
SCALE: 3"=1'-0"

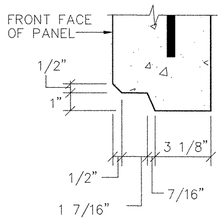

3 S2 SECTION @ PANEL BOTTOM OF SECTION B–B
SCALE: 3"=1'-0"

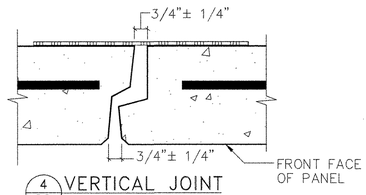

4 S2 VERTICAL JOINT
SCALE: 3"=1'-0"
(LOOKING UP PANEL)

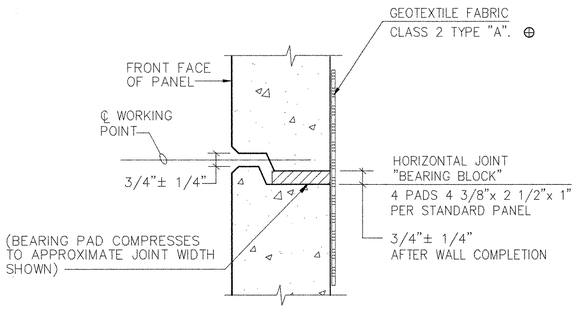

1 S2 HORIZONTAL JOINT
SCALE: 3"=1'-0"

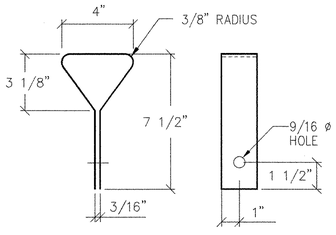

8 S2 TIE STRIP DETAIL
SCALE: 3"=1'-0"

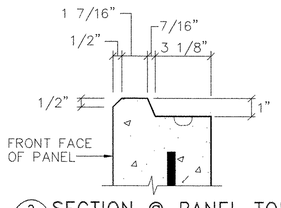

2 S2 SECTION @ PANEL TOP OF SECTION B–B
SCALE: 3"=1'-0"

HORIZONTAL JOINT

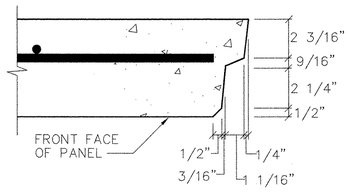

5 S2 SECTION @ PANEL RIGHT SIDE OF SECTION A–A
SCALE: 3"=1'-0"

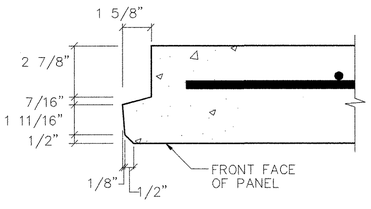

6 S2 SECTION @ PANEL LEFT SIDE OF SECTION A–A
SCALE: 3"=1'-0"

VERTICAL JOINT

DEC 13 2004

PADOT DRAWING #04-601 BQAD

PENNA. DEPARTMENT OF TRANSPORTATION
PRECAST CONCRETE WALL PANELS
COUNTY
S.R. _____ SECTION _____
SEG _____ OFFSET _____
CONTRACTOR: REINFORCED EARTH RETAINING WALLS
MANUFACTURER:
THE REINFORCED EARTH CO.
VIENNA, VA

REV.	DATE	DESCRIPTION

The Reinforced Earth Company
8614 Westwood Center Drive Suite 1100, Vienna, Virginia 22182 (703) 821-1175

"REINFORCED EARTH" is the registered trademark of The Reinforced Earth Company.

RLA STANDARD DETAILS

DRAWN BY: PHL	DATE: 8/31/04	REVISED:	SHEET
CHECKED BY: JES	DATE: 8/31/04		S2 OF S15
REFERENCE DRAWING: S1			

DIST- X
RE-XXXXXX
S2PA.dwg

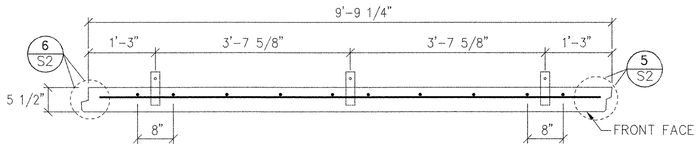

HORIZONTAL SECTION W/3 TIE STRIPS

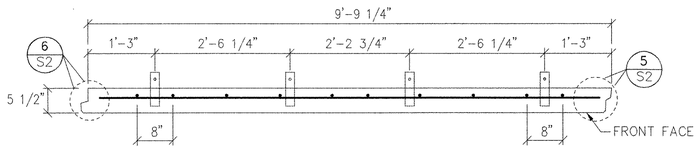

HORIZONTAL SECTION W/4 TIE STRIPS

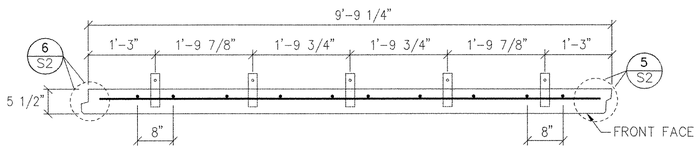

HORIZONTAL SECTION W/5 TIE STRIPS

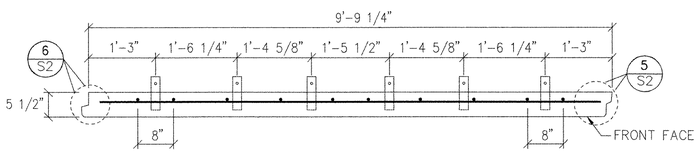

HORIZONTAL SECTION W/6 TIE STRIPS

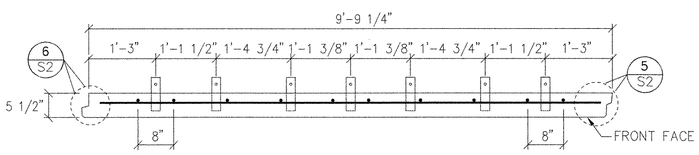

HORIZONTAL SECTION W/7 TIE STRIPS

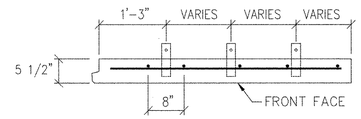

HORIZONTAL SECTION
LEFT CUT PANEL
(LOOKING UP PANEL FROM REAR FACE)

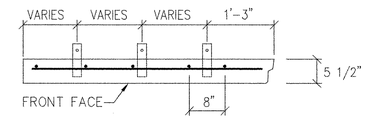

HORIZONTAL SECTION
RIGHT CUT PANEL
(LOOKING UP PANEL FROM REAR FACE)

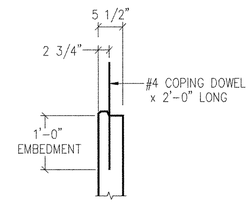

SECTION A-A
AT TOP W/DOWELS

NOTE:
USE EITHER STANDARD PANEL WITH LIP (AS SHOWN) OR FLAT TOP WITH FORM HEADER WHEN USING COPING DOWELS.

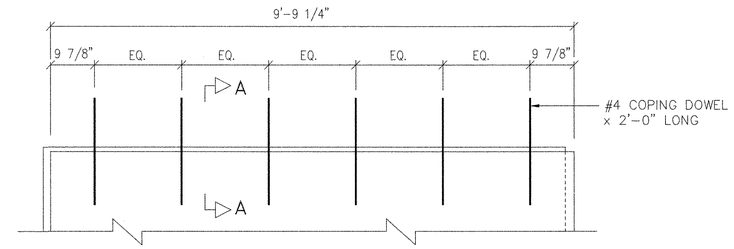

COPING DOWEL DETAILS
(BACK FACE)

NOTE:

1) ALL HORIZONTAL AND VERTICAL REBAR SHOWN IS #4, UNLESS OTHERWISE NOTED ON THE INDIVIDUAL PANEL DETAILS.

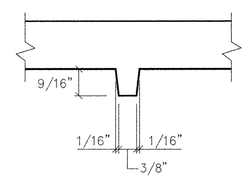

1 S3 BEARING PAD RECESS

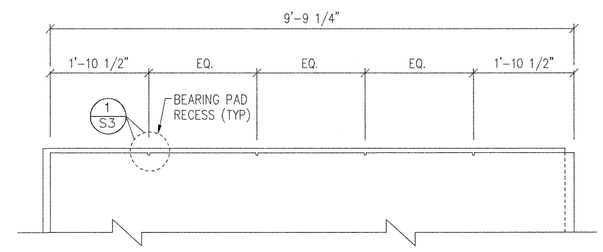

BEARING PAD DETAIL
(BACK FACE)

DEC 13 2004

PADOT DRAWING #04-601 BQAD

PENNA. DEPARTMENT OF TRANSPORTATION
PRECAST CONCRETE WALL PANELS
COUNTY
S.R. _____ SECTION _____
SEG _____ OFFSET _____
CONTRACTOR: REINFORCED EARTH RETAINING WALLS
MANUFACTURER:
THE REINFORCED EARTH CO.
VIENNA, VA

PRECAST PANEL SHOP DRAWINGS

DRAWN BY: PHL	DATE: 8/31/04	REVISED:	SHEET S3 OF S15
CHECKED BY: RES	DATE: 8/31/04		
REFERENCE DRAWING: S1			

REV.	DATE	DESCRIPTION

The Reinforced Earth Company
8614 Westwood Center Drive Suite 1100, Vienna, Virginia 22182 (703) 821-1175

"REINFORCED EARTH" is the registered trademark of The Reinforced Earth Company.

RE-XXXXXX DIST- X

S3PA.dwg

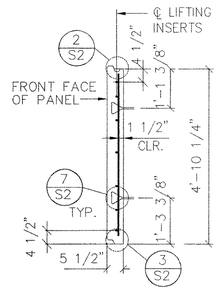

1/S4 SECTION B–B PANEL "A"
(A6 THRU A14)

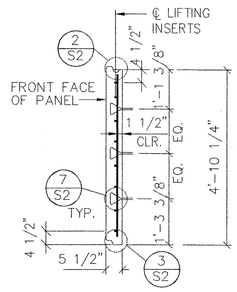

1/S4 SECTION B–B PANEL "A"
(A15 THRU A21)

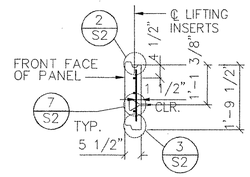

3/S4 SECTION B–B PANEL "C"

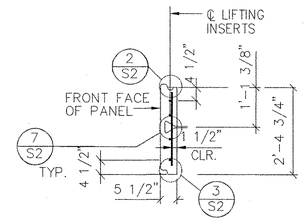

2/S4 SECTION B–B PANEL "D"

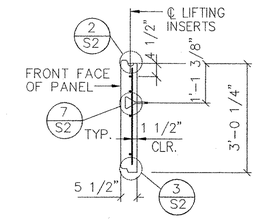

4/S4 SECTION B–B PANEL "E"
"TOP PANEL ONLY"

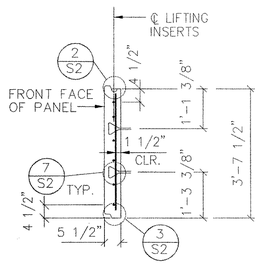

5/S4 SECTION B–B PANEL "F"

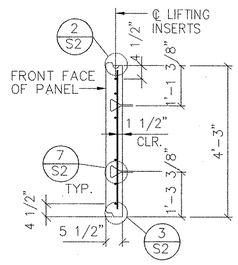

6/S4 SECTION B–B PANEL "G"

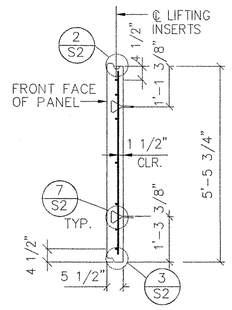

7/S4 SECTION B–B PANEL "K"
(K6 THRU K14)

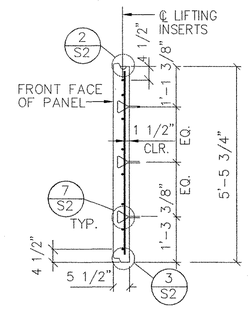

7/S4 SECTION B–B PANEL "K"
(K15 THRU K21)

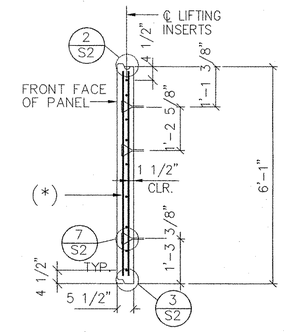

8/S4 SECTION B–B PANEL "L"
* ADDITIONAL BARS 2–#4 AT EACH LIFTING INSERT LOCATION

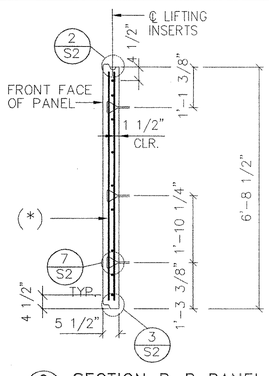

9/S4 SECTION B–B PANEL "M"
* ADDITIONAL BARS 2–#4 AT EACH LIFTING INSERT LOCATION

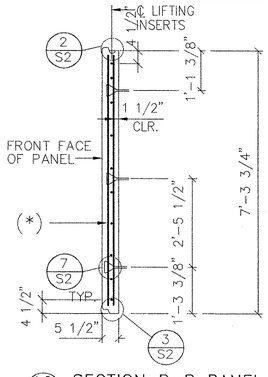

10/S4 SECTION B–B PANEL "N"
* ADDITIONAL BARS 2–#4 AT EACH LIFTING INSERT LOCATION

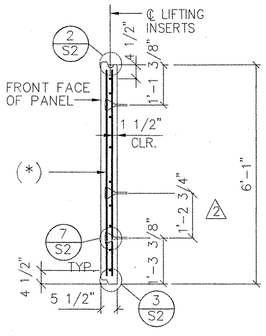

11/S4 SECTION B–B PANEL "P"
"BOTTOM PANEL ONLY"
* ADDITIONAL BARS 2–#4 AT EACH LIFTING INSERT LOCATION

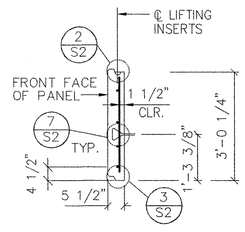

12/S4 SECTION B–B PANEL "S"
"BOTTOM PANEL ONLY"

DEC 13 2004

PADOT DRAWING #04-601 BQAD

REV.	DATE	DESCRIPTION
2	12/9/04	REVISED DIMENSION
1	12/3/04	REV. PER PDOT COMMENTS (11/29/04)

The Reinforced Earth Company
8614 Westwood Center Drive Suite 1100, Vienna, Virginia 22182 (703) 821-1175

"REINFORCED EARTH" is the registered trademark of The Reinforced Earth Company.

PENNA. DEPARTMENT OF TRANSPORTATION
PRECAST CONCRETE WALL PANELS
COUNTY
S.R. _____ SECTION _____
SEG _____ OFFSET _____
CONTRACTOR: REINFORCED EARTH RETAINING WALLS
MANUFACTURER:
THE REINFORCED EARTH CO.
VIENNA, VA

PRECAST PANEL SHOP DRAWINGS

DRAWN BY: PHL	DATE: 8/31/04	REVISED:	SHEET
CHECKED BY: JES	DATE: 8/31/04		S4 OF S15
REFERENCE DRAWING: S1			

DIST- X
RE-XXXXXX
S4PA.dwg

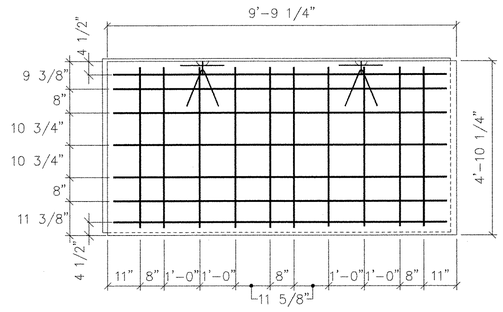

PANEL A
(A6 THRU A14)

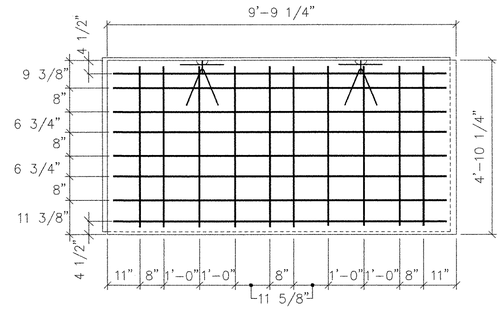

PANEL A
(A15 THRU A21)

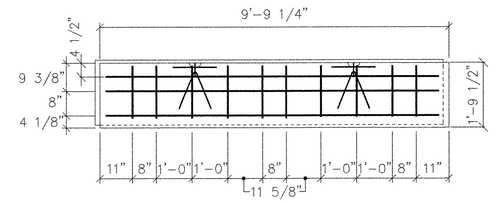

PANEL C

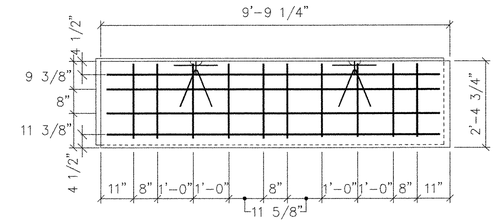

PANEL D

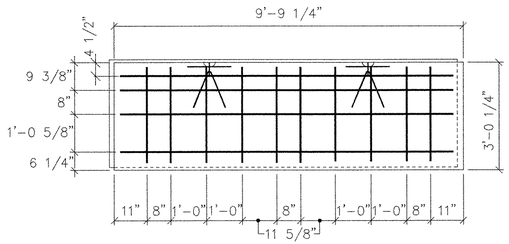

PANEL E
"TOP PANEL ONLY"

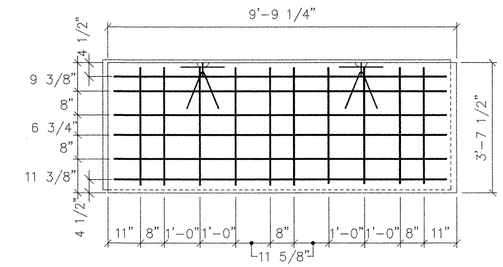

PANEL F

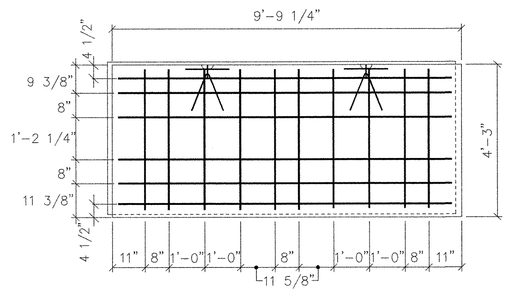

PANEL G

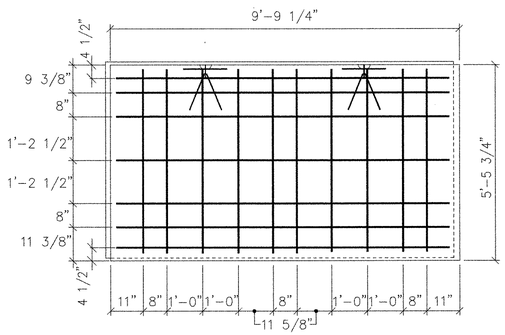

PANEL K
(K7 THRU K14)

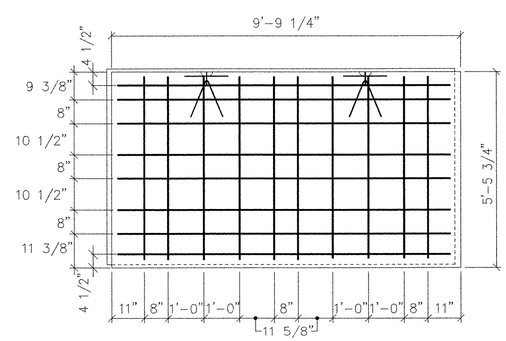

PANEL K
(K15 THRU K21)

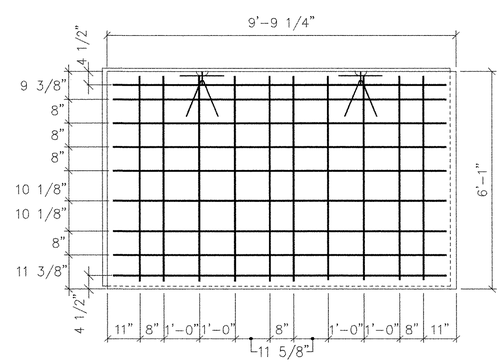

PANEL L

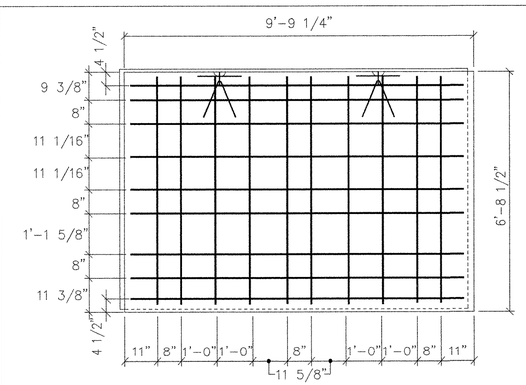

PANEL M

DEC 13 2004

PADOT DRAWING #04-601 BQAD

PENNA. DEPARTMENT OF TRANSPORTATION
PRECAST CONCRETE WALL PANELS
COUNTY
S.R. _____ SECTION _____
SEG _____ OFFSET _____
CONTRACTOR: REINFORCED EARTH RETAINING WALLS
MANUFACTURER:
THE REINFORCED EARTH CO.
VIENNA, VA

REV.	DATE	DESCRIPTION
1	12/3/04	REV. PER PDOT COMMENTS (11/29/04)

The Reinforced Earth Company
8614 Westwood Center Drive Suite 1100, Vienna, Virginia 22182 (703) 821-1175

"REINFORCED EARTH" is the registered trademark of The Reinforced Earth Company.

PRECAST PANEL SHOP DRAWINGS

DRAWN BY: PHL	DATE: 8/31/04	REVISED:	SHEET S5 OF S15
CHECKED BY: JES	DATE: 8/31/04		
REFERENCE DRAWING: S1			

RE-XXXXXX DIST- X

S5PA.dwg

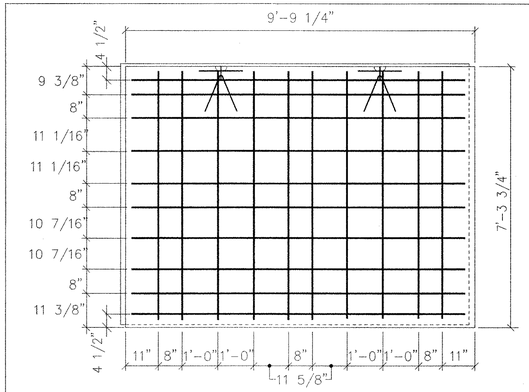

PANEL N

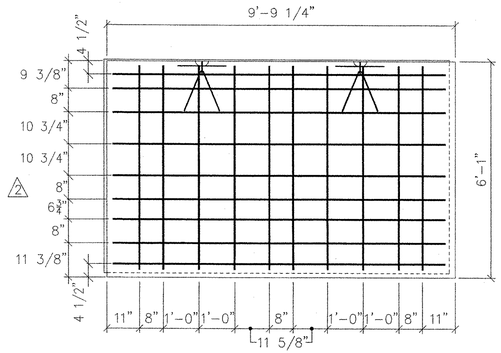

PANEL P

"BOTTOM PANEL ONLY"

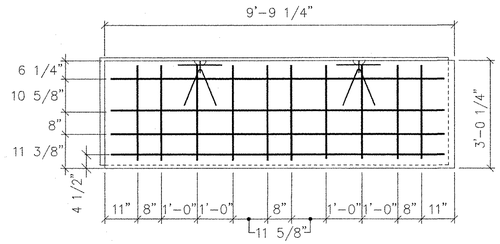

PANEL S

"BOTTOM PANEL ONLY"

DEC 13 2004

PADOT DRAWING #04-601 BQAD

PENNA. DEPARTMENT OF TRANSPORTATION
PRECAST CONCRETE WALL PANELS

COUNTY

S.R. _____ SECTION _____

SEG _____ OFFSET _____

CONTRACTOR: REINFORCED EARTH RETAINING WALLS

MANUFACTURER:

THE REINFORCED EARTH CO.
VIENNA, VA

PRECAST PANEL SHOP DRAWINGS

DRAWN BY: PHL	DATE: 8/31/04	REVISED:	SHEET
CHECKED BY: JES	DATE: 8/31/04		S6 OF S15
REFERENCE DRAWING: S1			

REV.	DATE	DESCRIPTION
2	12/9/04	REVISED DIMENSION
1	12/3/04	REV. PER PDOT COMMENTS (11/29/04)

The Reinforced Earth Company
8614 Westwood Center Drive Suite 1100, Vienna, Virginia 22182 (703) 821-1175

"REINFORCED EARTH" is the registered trademark of The Reinforced Earth Company.

RE-XXXXXX DIST- X

S6PA.dwg

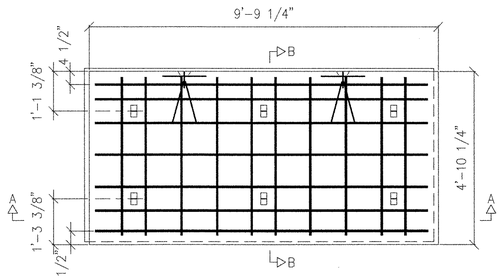

A-6

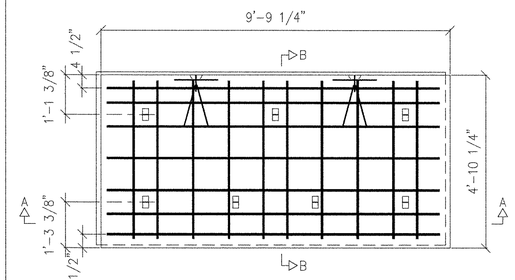

A-7

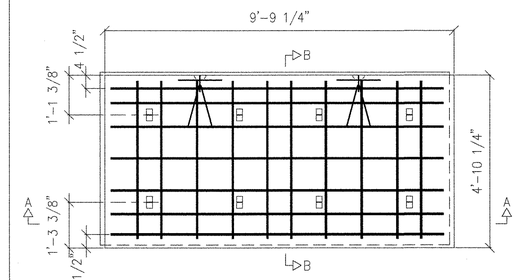

A-8

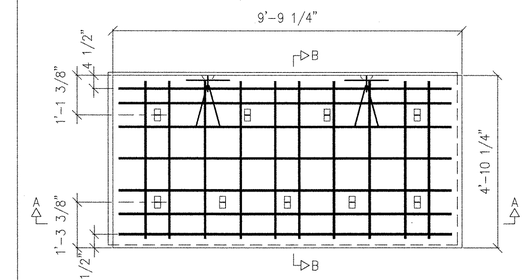

A-9

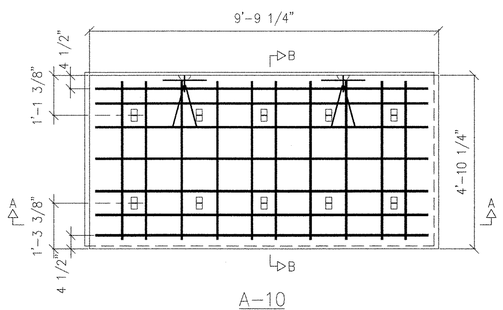

A-10

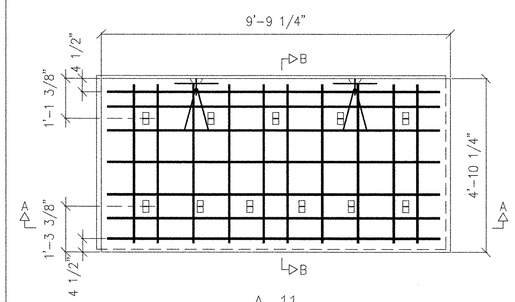

A-11

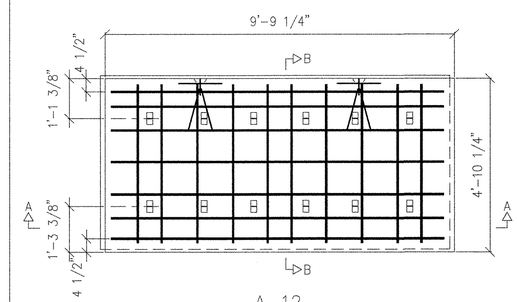

A-12

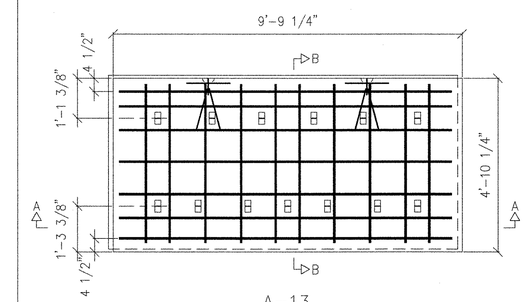

A-13

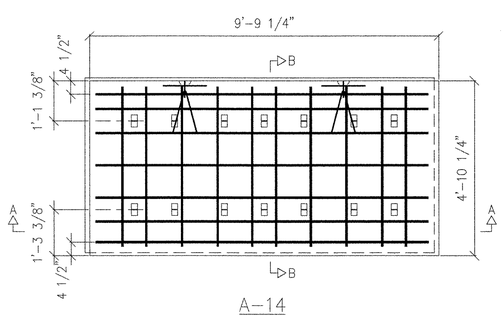

A-14

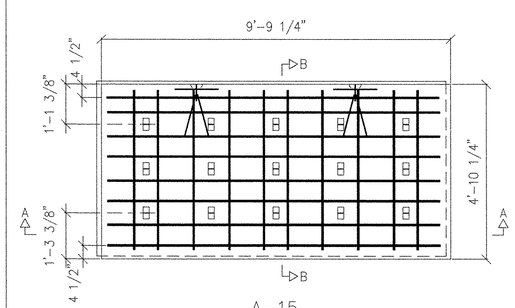

A-15

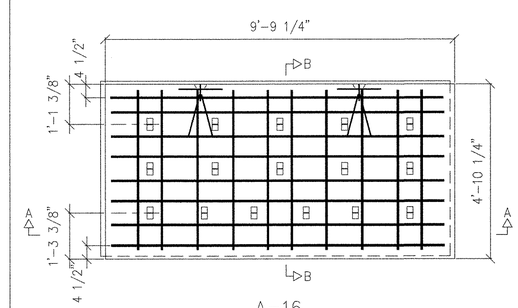

A-16

DEC 13 2004

PADOT DRAWING #04-601 BOAD

PENNA. DEPARTMENT OF TRANSPORTATION
PRECAST CONCRETE WALL PANELS
COUNTY
S.R. _____ SECTION _____
SEG _____ OFFSET _____
CONTRACTOR: REINFORCED EARTH RETAINING WALLS
MANUFACTURER:
THE REINFORCED EARTH CO.
VIENNA, VA

PRECAST PANEL SHOP DRAWINGS

DRAWN BY: PHL	DATE: 8/31/04	REVISED:	SHEET
CHECKED BY: JES	DATE: 8/31/04		S7 OF S15
REFERENCE DRAWING: S1			

REV.	DATE	DESCRIPTION
1	12/3/04	REV. PER PDOT COMMENTS (11/29/04)

The Reinforced Earth Company
8614 Westwood Center Drive Suite 1100, Vienna, Virginia 22182 (703) 821-1175

"REINFORCED EARTH" is the registered trademark of The Reinforced Earth Company.

RE-XXXXXX DIST- X

S7PA.dwg

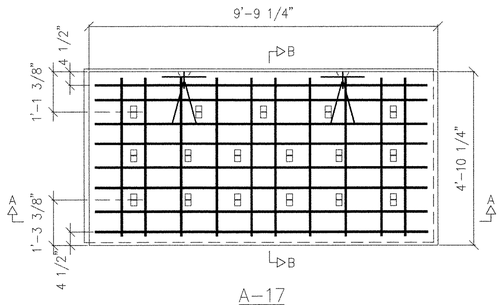

A-17

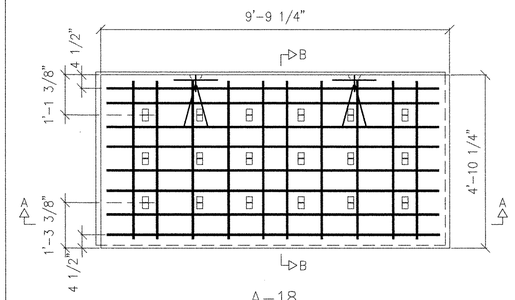

A-18

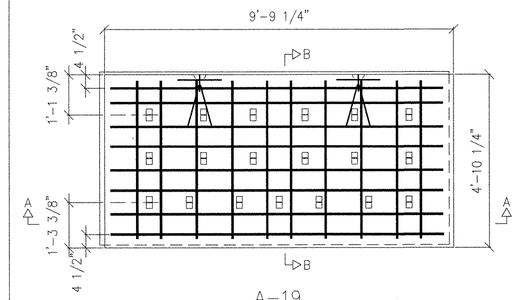

A-19

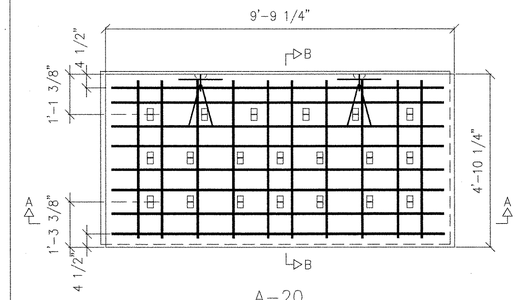

A-20

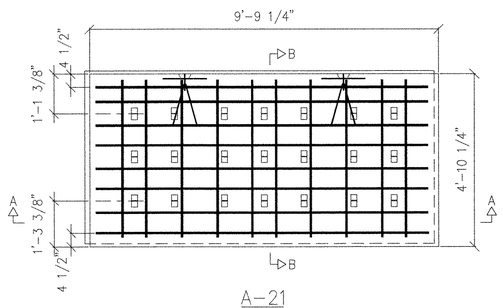

A-21

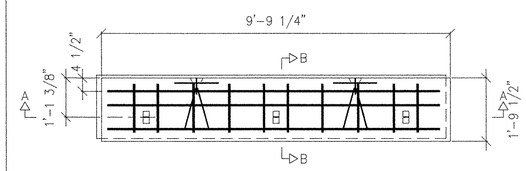

C-3

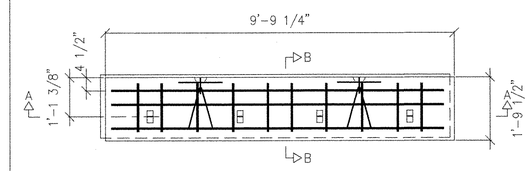

C-4

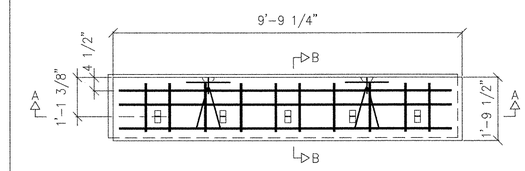

C-5

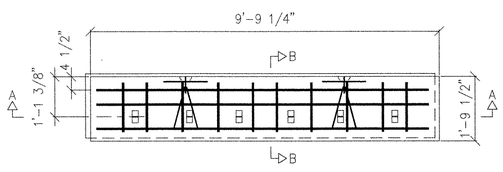

C-6

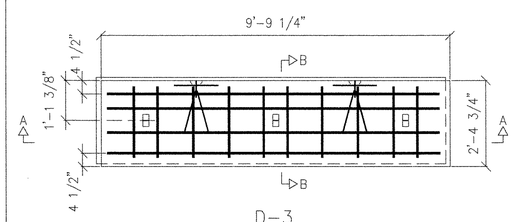

D-3

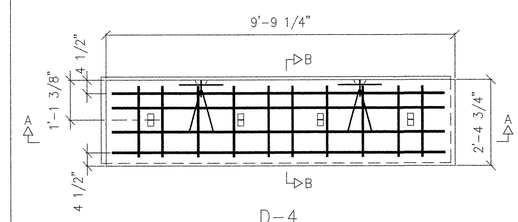

D-4

DEC13 2004

PADOT DRAWING #04-601 BQAD

PENNA. DEPARTMENT OF TRANSPORTATION
PRECAST CONCRETE WALL PANELS
COUNTY
S.R. _____ SECTION _____
SEG _____ OFFSET _____
CONTRACTOR: REINFORCED EARTH RETAINING WALLS
MANUFACTURER:
THE REINFORCED EARTH CO.
VIENNA, VA

PRECAST PANEL SHOP DRAWINGS

REV.	DATE	DESCRIPTION
1	12/3/04	REV. PER PDOT COMMENTS (11/29/04)

The Reinforced Earth Company
8614 Westwood Center Drive Suite 1100, Vienna, Virginia 22182 (703) 821-1175

"REINFORCED EARTH" is the registered trademark of The Reinforced Earth Company.

DRAWN BY: PHL	DATE: 8/31/04	REVISED:	SHEET
CHECKED BY: KS	DATE: 8/31/04		S8 OF S15
REFERENCE DRAWING: S1			

DIST- X
RE-XXXXXX
S8PA.dwg

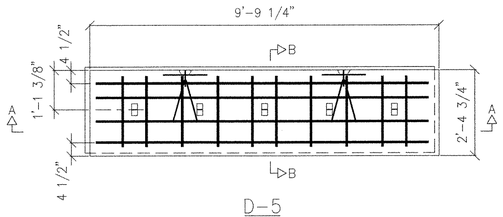

D-5

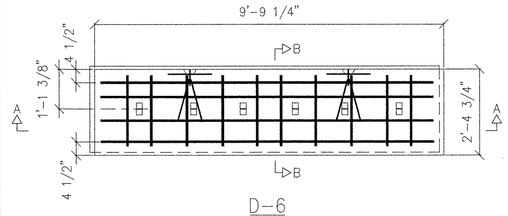

D-6

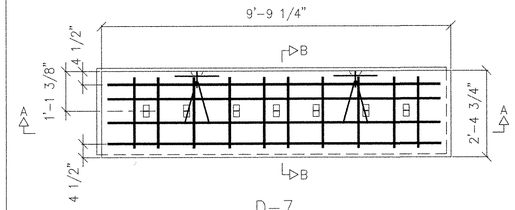

D-7

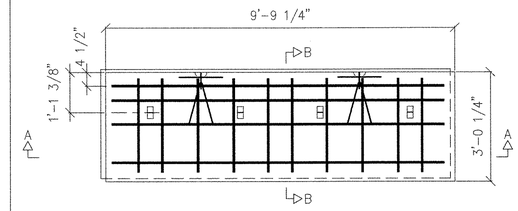

E-4

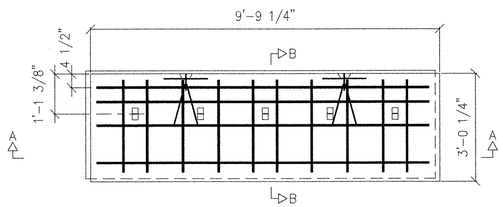

E-5

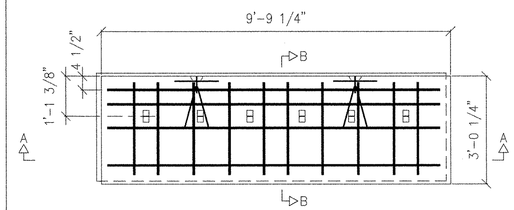

E-6

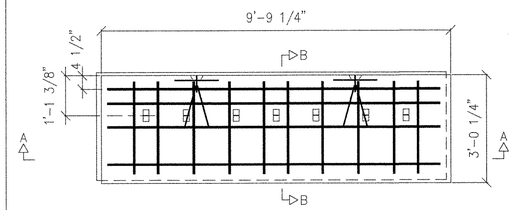

E-7

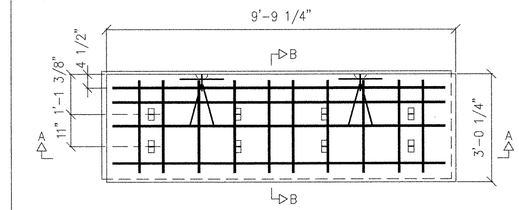

E-8

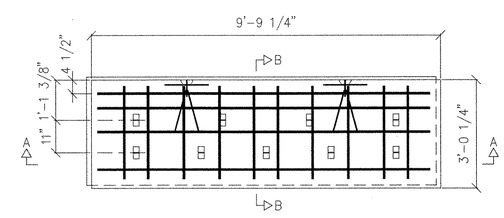

E-9

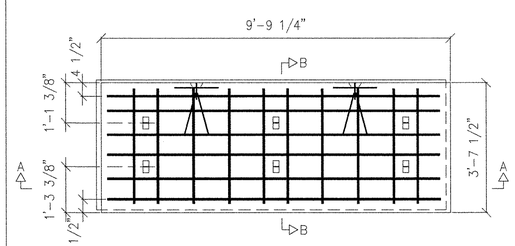

F-6

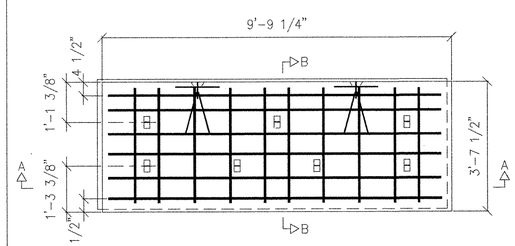

F-7

DEC 13 2004

PADOT DRAWING # 04-601 BQAD

PENNA. DEPARTMENT OF TRANSPORTATION
PRECAST CONCRETE WALL PANELS
COUNTY
S.R. _____ SECTION _____
SEG _____ OFFSET _____
CONTRACTOR: REINFORCED EARTH RETAINING WALLS
MANUFACTURER:
THE REINFORCED EARTH CO.
VIENNA, VA

REV.	DATE	DESCRIPTION
1	12/3/04	REV. PER PDOT COMMENTS (11/29/04)

The Reinforced Earth Company
8614 Westwood Center Drive Suite 1100, Vienna, Virginia 22182 (703) 821-1175

"REINFORCED EARTH" is the registered trademark of The Reinforced Earth Company.

PRECAST PANEL SHOP DRAWINGS

DRAWN BY: PHL	DATE: 8/31/04	REVISED:	SHEET
CHECKED BY: KB	DATE: 8/31/04		S9 OF S15
REFERENCE DRAWING: S1			

DIST- X
RE-XXXXXX
S9PA.dwg

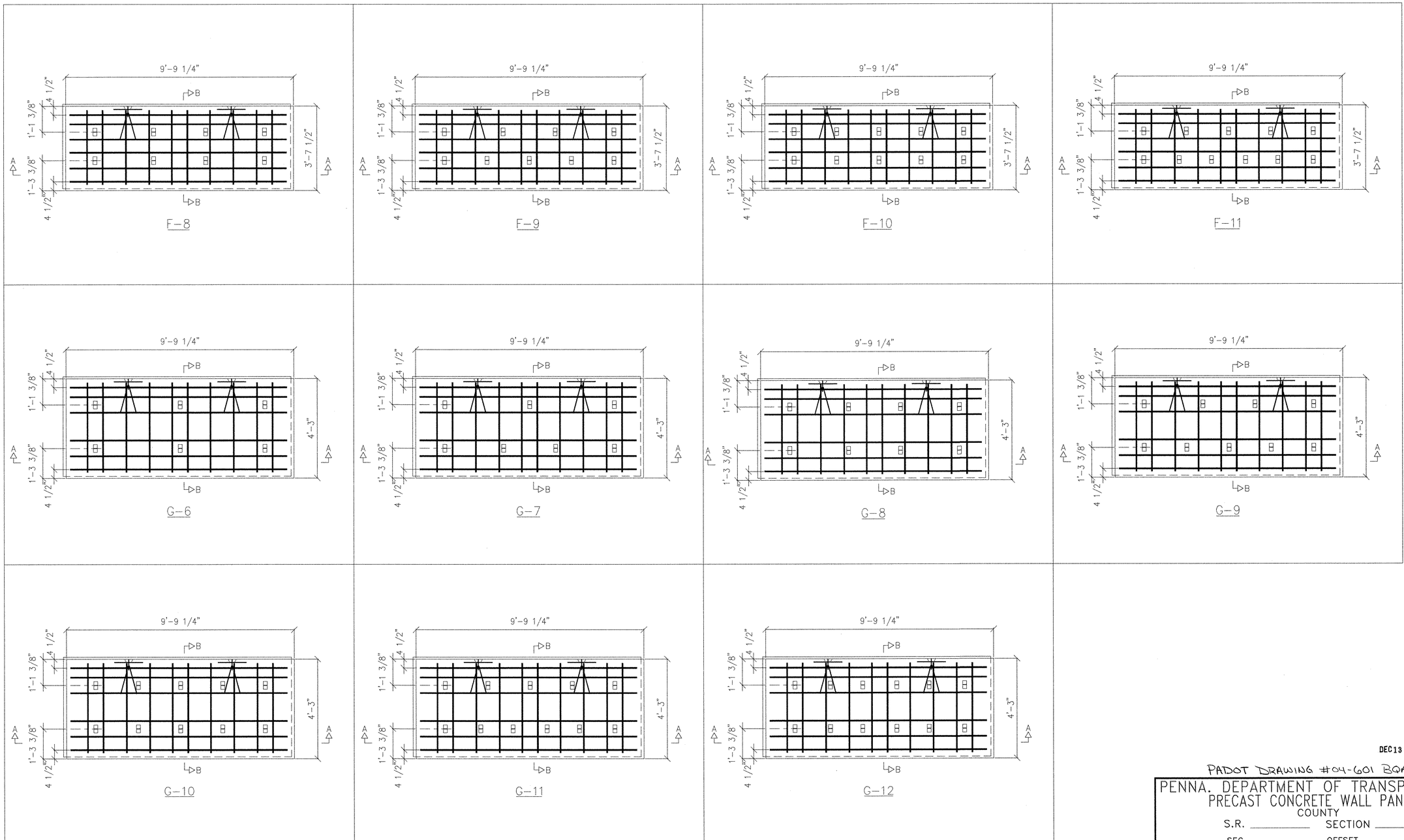

DEC 13 2004

PADOT DRAWING #04-601 BQAD

PENNA. DEPARTMENT OF TRANSPORTATION
PRECAST CONCRETE WALL PANELS
COUNTY

S.R. _____ SECTION _____

SEG _____ OFFSET _____

CONTRACTOR: REINFORCED EARTH RETAINING WALLS

MANUFACTURER:

THE REINFORCED EARTH CO.
VIENNA, VA

PRECAST PANEL SHOP DRAWINGS

DRAWN BY: PHL	DATE: 8/31/04	REVISED:	SHEET S10 OF S15
CHECKED BY:	DATE: 8/31/04		
REFERENCE DRAWING: S1			

REV.	DATE	DESCRIPTION
1	12/3/04	REV. PER PDOT COMMENTS (11/29/04)

The Reinforced Earth Company
8614 Westwood Center Drive Suite 1100, Vienna, Virginia 22182 (703) 821-1175

"REINFORCED EARTH" is the registered trademark of The Reinforced Earth Company.

RE-XXXXXX DIST- X

S10PA.dwg

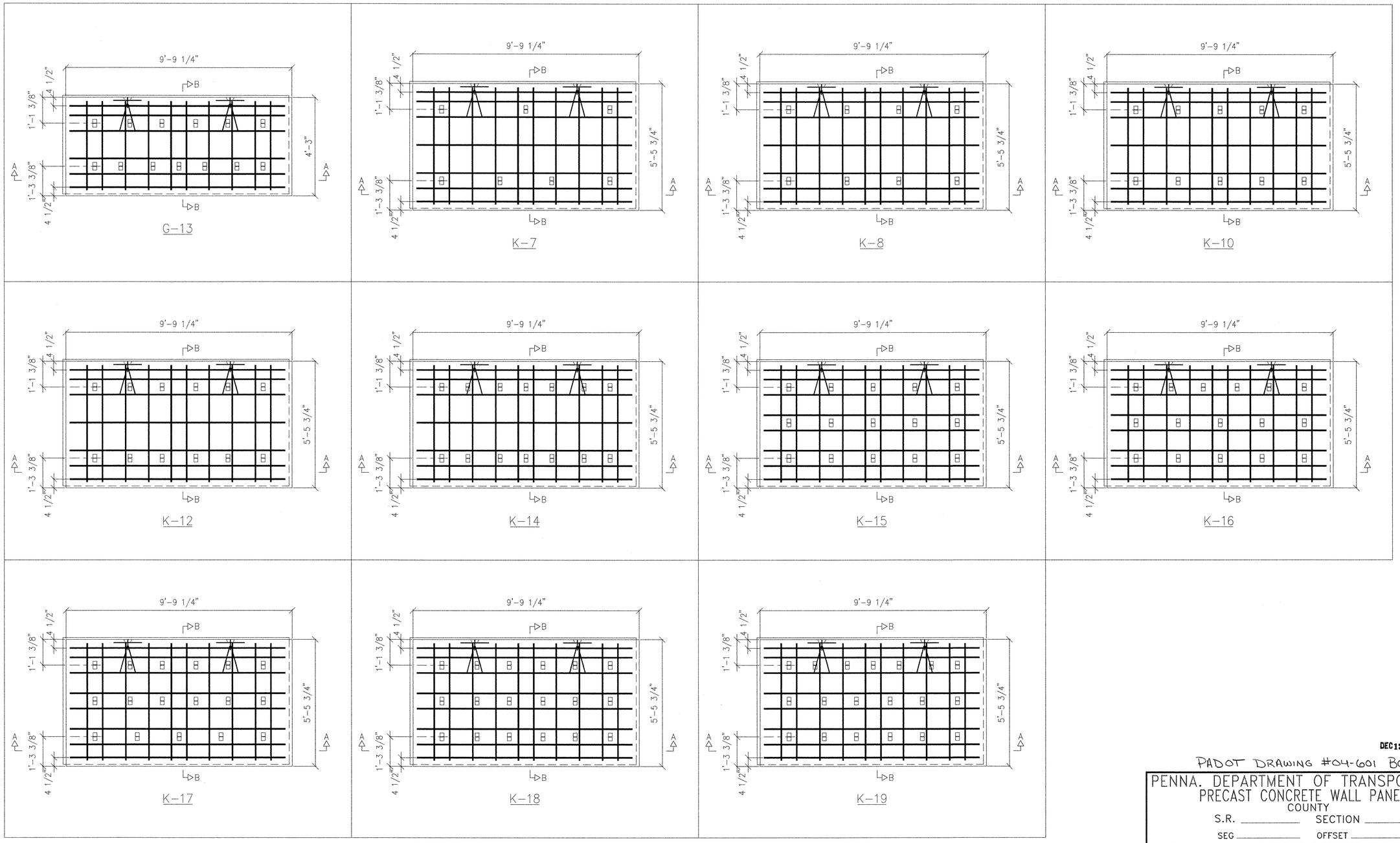

DEC 13 2004

PADOT DRAWING #04-601 BOAD

PENNA. DEPARTMENT OF TRANSPORTATION
PRECAST CONCRETE WALL PANELS
COUNTY
S.R. _____ SECTION _____
SEG _____ OFFSET _____
CONTRACTOR: REINFORCED EARTH RETAINING WALLS
MANUFACTURER:
THE REINFORCED EARTH CO.
VIENNA, VA

PRECAST PANEL SHOP DRAWINGS

REV.	DATE	DESCRIPTION
1	12/3/04	REV. PER PDOT COMMENTS (11/29/04)

The Reinforced Earth Company
8614 Westwood Center Drive Suite 1100, Vienna, Virginia 22182 (703) 821-1175

"REINFORCED EARTH" is the registered trademark of The Reinforced Earth Company.

DRAWN BY: PHL	DATE: 8/31/04	REVISED:	SHEET
CHECKED BY: JES	DATE: 8/31/04		S11 OF S15
REFERENCE DRAWING: S1			

RE-XXXXXX DIST- X

S11PA.dwg

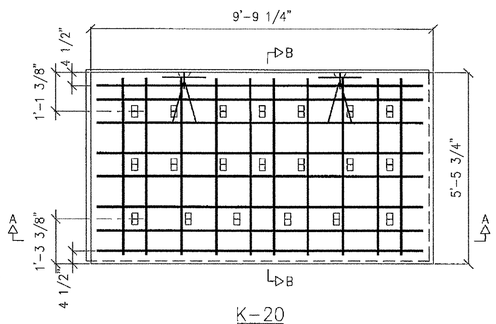

K-20

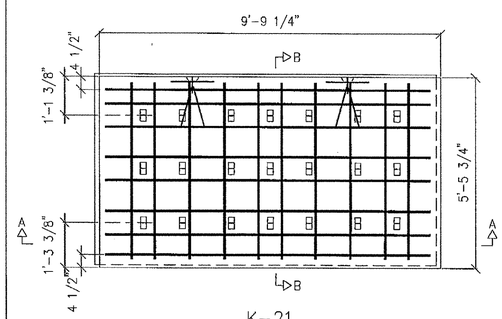

K-21

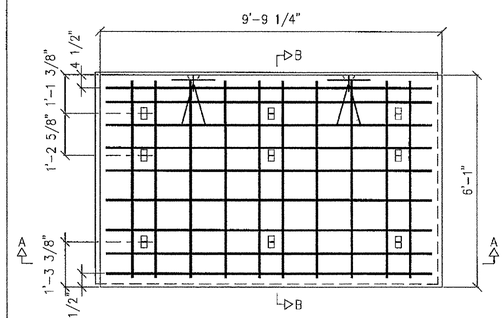

L-9

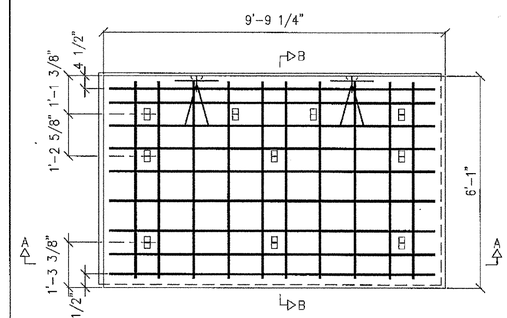

L-10

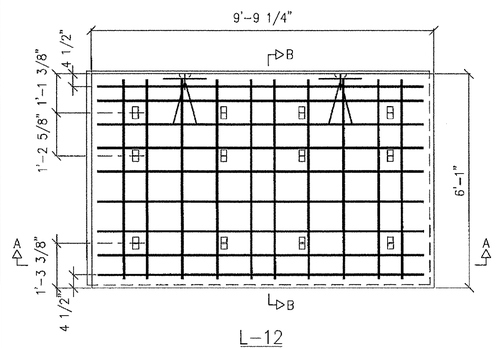

L-12

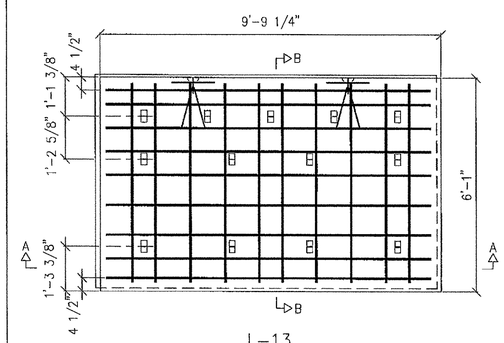

L-13

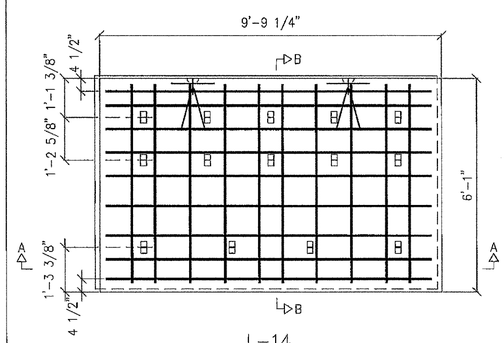

L-14

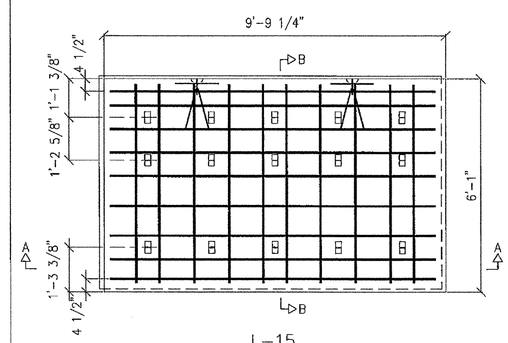

L-15

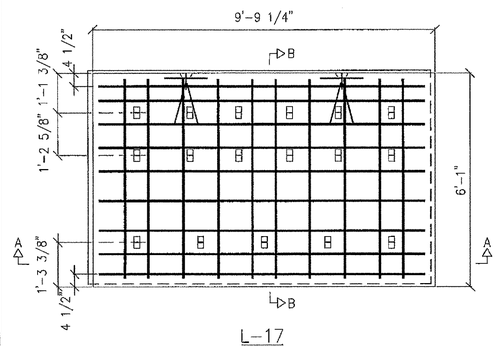

L-17

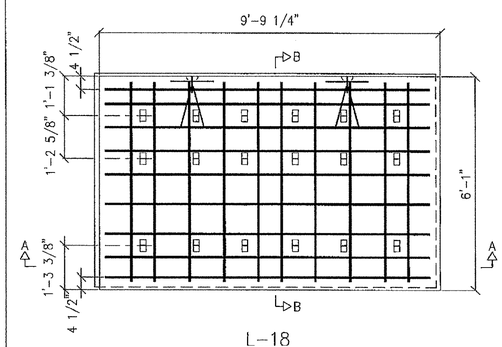

L-18

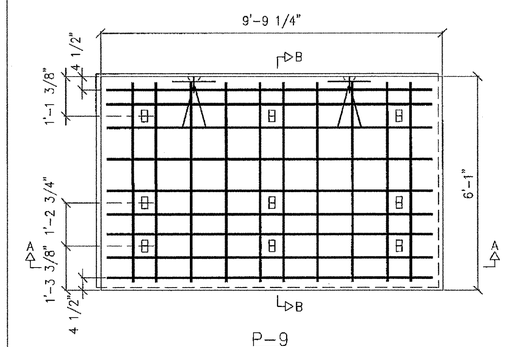

P-9

DEC 13 2004

PADOT DRAWING #04-601 BQAD

PENNA. DEPARTMENT OF TRANSPORTATION
PRECAST CONCRETE WALL PANELS
COUNTY
S.R. _____ SECTION _____
SEG _____ OFFSET _____
CONTRACTOR: REINFORCED EARTH RETAINING WALLS
MANUFACTURER:
THE REINFORCED EARTH CO.
VIENNA, VA

REV.	DATE	DESCRIPTION
1	12/3/04	REV. PER PDOT COMMENTS (11/29/04)

The Reinforced Earth Company
8614 Westwood Center Drive Suite 1100, Vienna, Virginia 22182 (703) 821-1175

"REINFORCED EARTH" is the registered trademark of The Reinforced Earth Company

PRECAST PANEL SHOP DRAWINGS

DRAWN BY: PHL	DATE: 8/31/04	REVISED:	SHEET
CHECKED BY:	DATE: 8/31/04		S12 OF S15
REFERENCE DRAWING: S1			

RE-XXXXXX DIST- X

S12PA.dwg

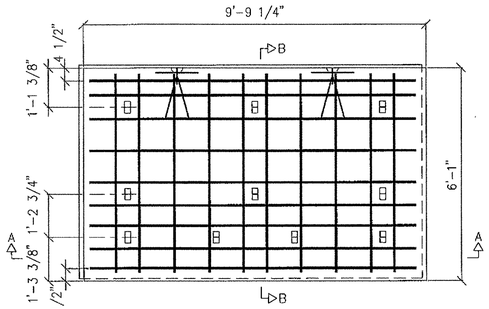

P-10

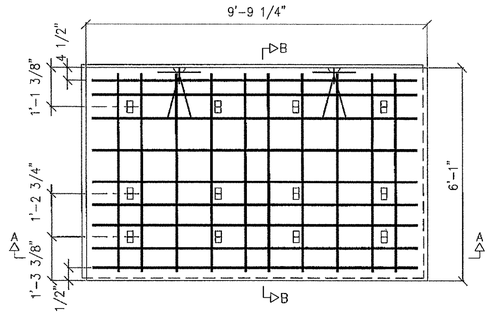

P-12

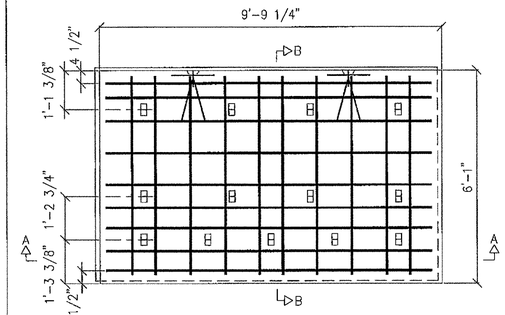

P-13

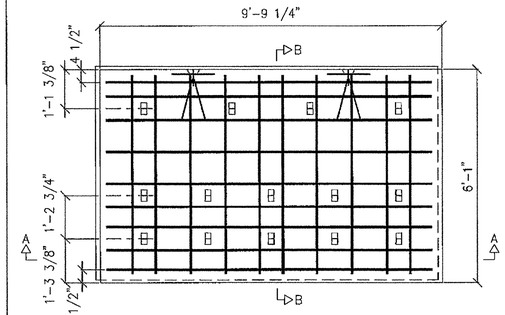

P-14

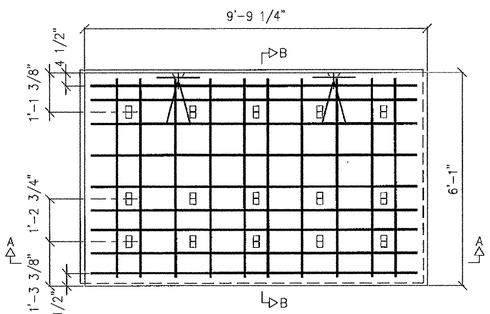

P-15

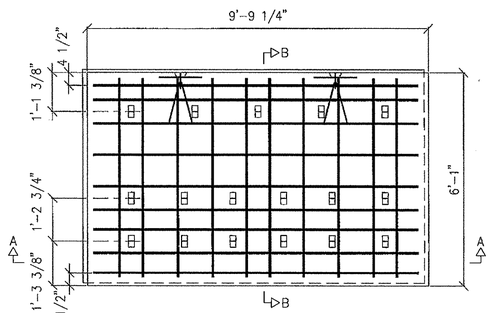

P-17

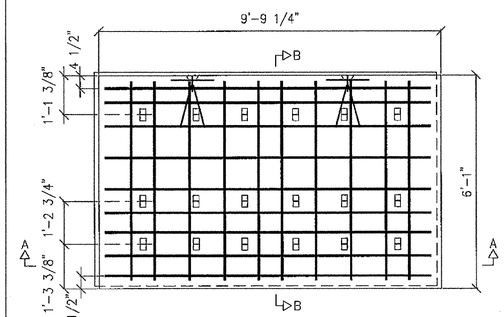

P-18

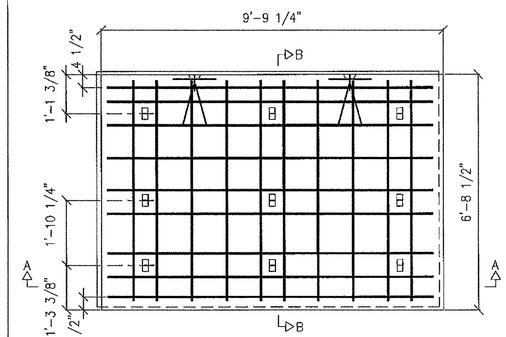

M-9

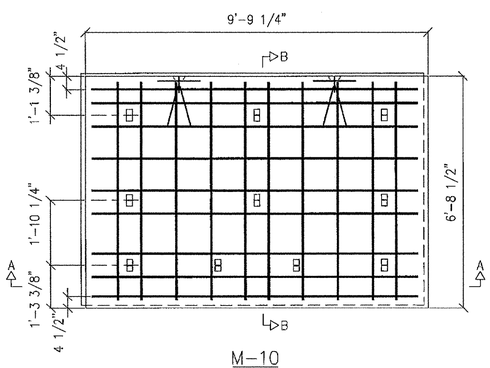

M-10

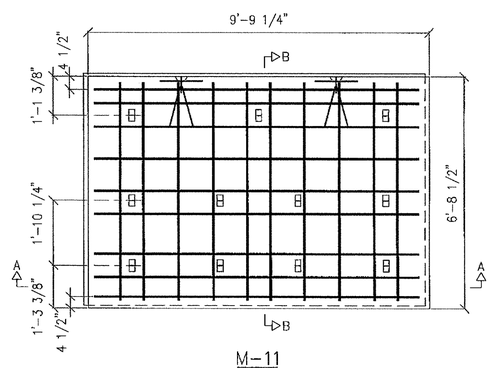

M-11

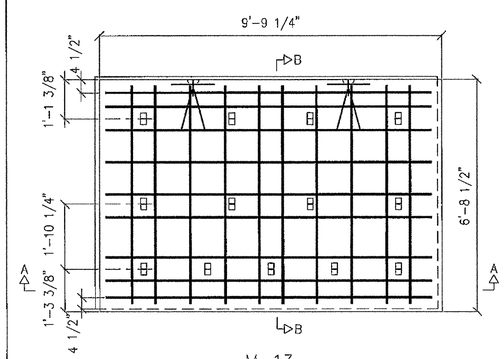

M-13

DEC 13 2004

PADOT DRAWING #04-001 BRAD

PENNA. DEPARTMENT OF TRANSPORTATION
PRECAST CONCRETE WALL PANELS
COUNTY
S.R. _____ SECTION _____
SEG _____ OFFSET _____
CONTRACTOR: REINFORCED EARTH RETAINING WALLS
MANUFACTURER:
THE REINFORCED EARTH CO.
VIENNA, VA

REV.	DATE	DESCRIPTION
1	12/3/04	REV. PER PDOT COMMENTS (11/29/04)

The Reinforced Earth Company
8614 Westwood Center Drive Suite 1100, Vienna, Virginia 22182 (703) 821-1175

"REINFORCED EARTH" is the registered trademark of The Reinforced Earth Company.

PRECAST PANEL SHOP DRAWINGS

DRAWN BY: PHL	DATE: 8/31/04	REVISED:	SHEET S13 OF S15
CHECKED BY:	DATE: 8/31/04		
REFERENCE DRAWING: S1			

RE-XXXXXX DIST- X

S13PA.dwg

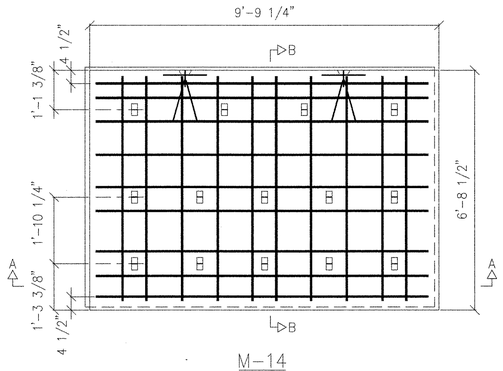

M-14

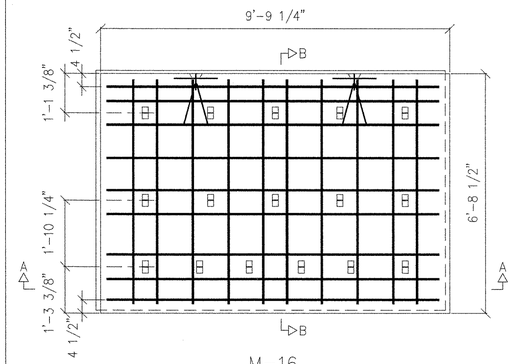

M-16

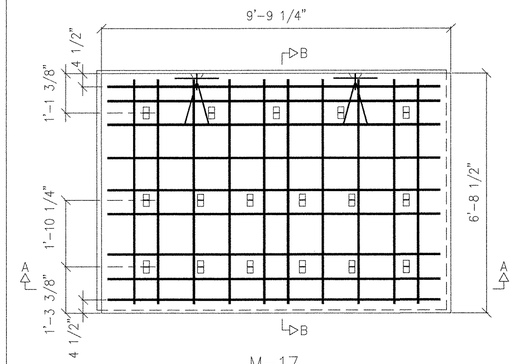

M-17

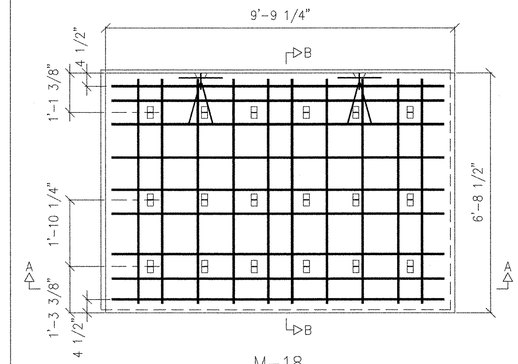

M-18

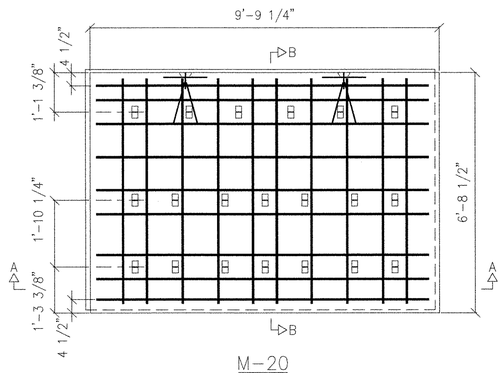

M-20

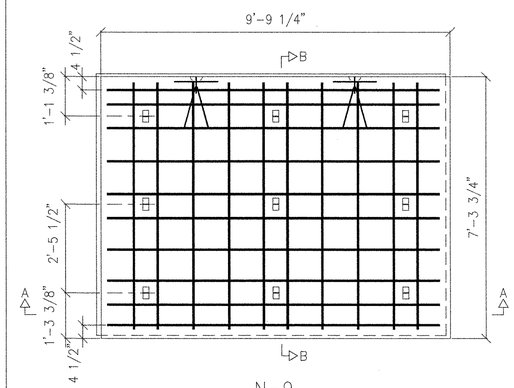

N-9

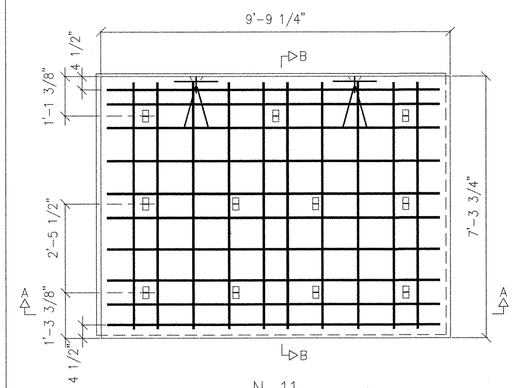

N-11

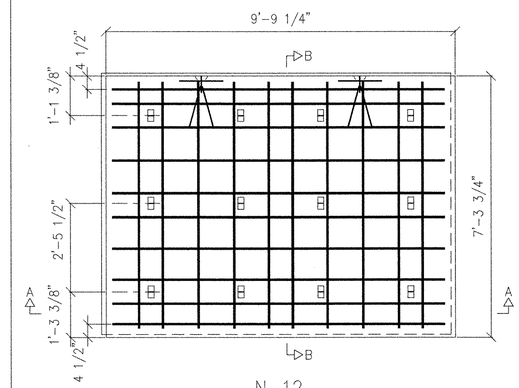

N-12

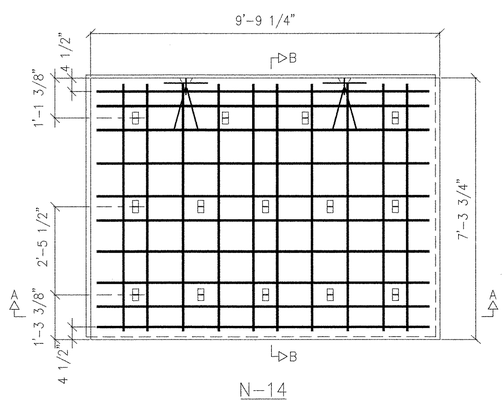

N-14

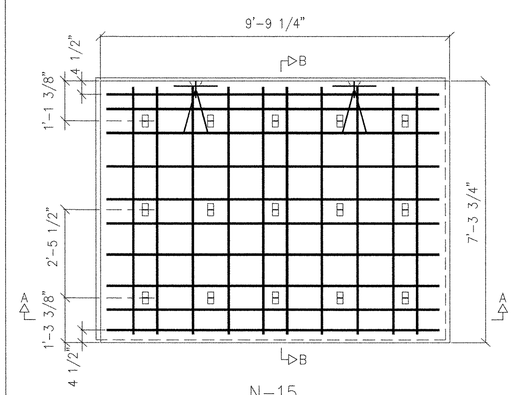

N-15

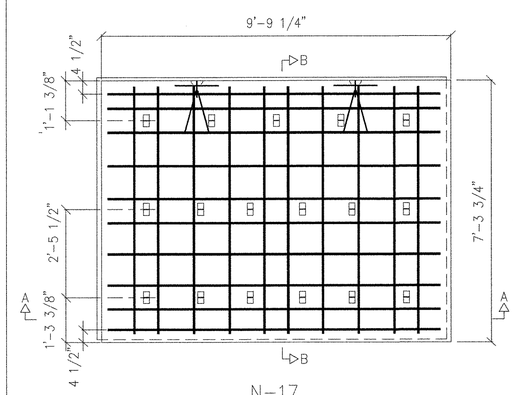

N-17

DEC 13 2004

PADOT DRAWING #04-601 BQAD

PENNA. DEPARTMENT OF TRANSPORTATION
PRECAST CONCRETE WALL PANELS
COUNTY

S.R. _____ SECTION _____

SEG _____ OFFSET _____

CONTRACTOR: REINFORCED EARTH RETAINING WALLS

MANUFACTURER:

THE REINFORCED EARTH CO.
VIENNA, VA

PRECAST PANEL SHOP DRAWINGS

DRAWN BY: PHL	DATE: 8/31/04	REVISED:	SHEET
CHECKED BY: RS	DATE: 8/31/04		S14 OF S15
REFERENCE DRAWING: S1			

REV.	DATE	DESCRIPTION
1	12/3/04	REV. PER PDOT COMMENTS (11/29/04)

The Reinforced Earth Company
8614 Westwood Center Drive Suite 1100, Vienna, Virginia 22182 (703) 821-1175

"REINFORCED EARTH" is the registered trademark of The Reinforced Earth Company.

RE-XXXXXX DIST- X

S14PA.dwg

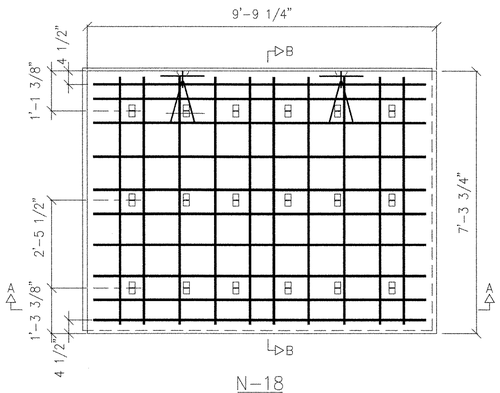

N-18

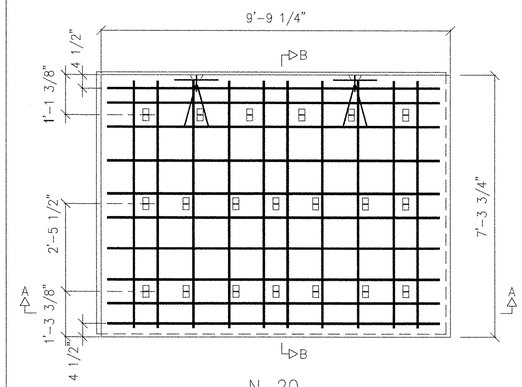

N-20

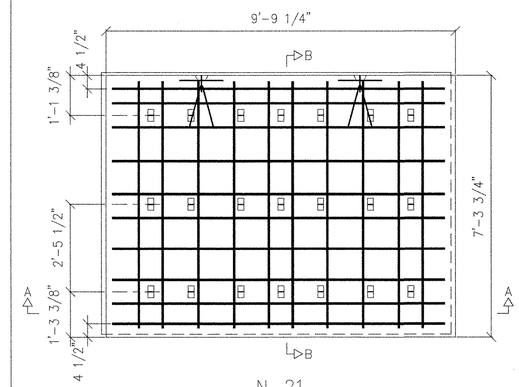

N-21

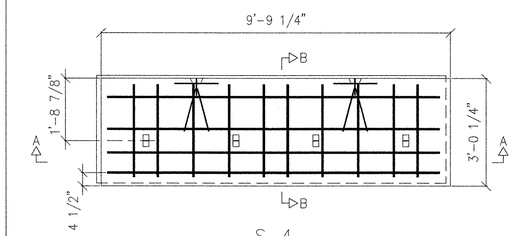

S-4

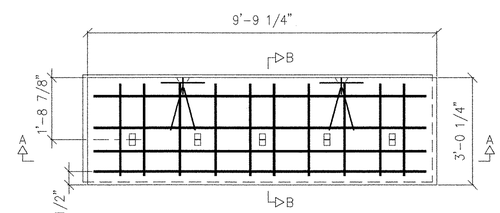

S-5

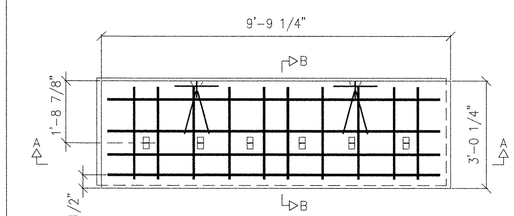

S-6

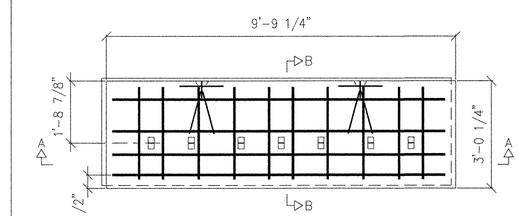

S-7

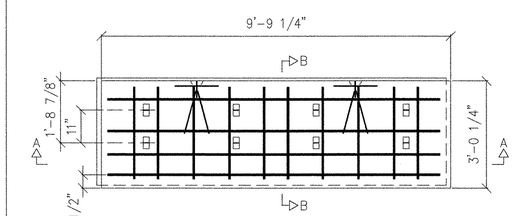

S-8

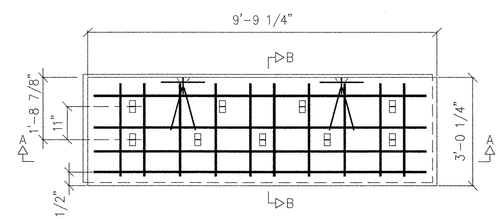

S-9

DEC 13 2004

PADOT DRAWING #04-601 BQAD

PENNA. DEPARTMENT OF TRANSPORTATION
PRECAST CONCRETE WALL PANELS
COUNTY
S.R. _____ SECTION _____
SEG _____ OFFSET _____
CONTRACTOR: REINFORCED EARTH RETAINING WALLS
MANUFACTURER:
THE REINFORCED EARTH CO.
VIENNA, VA

PRECAST PANEL SHOP DRAWINGS

DRAWN BY: PHL	DATE: 8/31/04	REVISED:	SHEET
CHECKED BY:	DATE: 8/31/04		S15 OF S15
REFERENCE DRAWING: S1			

REV.	DATE	DESCRIPTION
1	12/3/04	REV. PER PDOT COMMENTS (11/29/04)

The Reinforced Earth Company
8614 Westwood Center Drive Suite 1100, Vienna, Virginia 22182 (703) 821-1175

"REINFORCED EARTH" is the registered trademark of The Reinforced Earth Company.

DIST- X
RE-XXXXXX
S15PA.dwg

The Reinforced Earth Company

8614 Westwood Center Drive Suite 1100, Vienna, Virginia 22182 (703) 821-1175

STANDARD PRECAST PANEL SHOP DRAWINGS
1.500M x 3.000M RECTANGULAR PANELS

⚠

PANEL GENERAL NOTES

1) REINFORCING BARS SHALL BE ASTM A615 GRADE 410. (EPOXY COATED PER PENN. D.O.T. PUBLICATION 408 SEC. 709 (A) 1).

2) CONCRETE FOR PRECAST PANELS SHALL HAVE A MINIMUM COMPRESSIVE STRENGTH AFTER 28 DAYS OF 28 Mpa., OR AS REQUIRED BY THE PROJECT SPECIAL PROVISIONS.

3) TIE STRIPS SHALL BE STEEL ASTM A1011 SS, GRADE 345 MPa (FORMERLY ASTM A570), (GALVANIZED PER ASTM A-123M).

4) ALL FRONT EDGES OF PANELS SHALL HAVE A 13 mm CHAMFER.

5) TIE STRIPS SHALL BE PLACED WITHIN 25 mm OF THE DIMENSION SHOWN ON THE FABRICATION DRAWINGS.

6) PANEL DESIGN THICKNESS IS 140 mm. THE QUANTITY OF CONCRETE WILL INCREASE TO ACCOMODATE ANY ARCHITECTURAL SURFACE FINISH THAT MAY BE SPECIFIED.

7) VERTICAL REINFORCING BARS SHALL BE PLACED 38 mm (MIN.) CLEAR FROM THE BACK FACE OF THE PANEL.

8) ALL REINFORCING BARS SHALL BE STOPPED 38 mm (MIN.) CLEAR FROM ANY EDGE OF PANEL UNLESS NOTED ON INDIVIDUAL FABRICATION DRAWING.

9) ALL INDIVIDUAL FABRICATION DRAWINGS ARE SHOWN BACK FACE.

10) IF COPING DOWELS ARE REQUIRED, USE 610 LONG, #13 REBAR, SIX (6) PER FULL-WIDTH PANEL.

11) KEY TO PIECE MARK:

A L-6-2.50

- A — BASIC PANEL TYPE
- L — PANEL MODIFICATION
- 6 — No. OF TIE STRIPS PER PANEL
- 2.50 — PANEL WIDTH / DEFLECTION ANGLE (FOR BENT PANELS)

PRECAST PANEL DRAWING INDEX

SHEET NO.	PANEL TYPE	SHEET NO.	PANEL TYPE	SHEET NO.	PANEL TYPE
S1M	GENERAL NOTES	S10M	G-9-R4	S14M	N-15-R4
S2M	DETAILS	S10M	G-10-R4	S14M	N-17-R4
S3M	HORIZONTAL SECT.	S10M	G-11-R4	S15M	N-18-R4
S4M	VERTICAL SECT.	S10M	G-12-R4	S15M	N-20-R4
S5M	STD. REBAR	S11M	G-13-R4	S15M	N-21-R4
S6M	STD. REBAR	S11M	K-7-R4	S15M	S-4-R4
S7M	A-6-R4	S11M	K-8-R4	S15M	S-5-R4
S7M	A-7-R4	S11M	K-10-R4	S15M	S-6-R4
S7M	A-8-R4	S11M	K-12-R4	S15M	S-7-R4
S7M	A-9-R4	S11M	K-14-R4	S15M	S-8-R4
S7M	A-10-R4	S11M	K-15-R4	S15M	S-9-R4
S7M	A-11-R4	S11M	K-16-R4		
S7M	A-12-R4	S11M	K-17-R4		
S7M	A-13-R4	S11M	K-18-R4		
S7M	A-14-R4	S11M	K-19-R4		
S7M	A-15-R4	S12M	K-20-R4		
S7M	A-16-R4	S12M	K-21-R4		
S8M	A-17-R4	S12M	L-9-R4		
S8M	A-18-R4	S12M	L-10-R4		
S8M	A-19-R4	S12M	L-12-R4		
S8M	A-20-R4	S12M	L-13-R4		
S8M	A-21-R4	S12M	L-14-R4		
S8M	C-3-R4	S12M	L-15-R4		
S8M	C-4-R4	S12M	L-17-R4		
S8M	C-5-R4	S12M	L-18-R4		
S8M	C-6-R4	S12M	P-9-R4		
S8M	D-3-R4	S13M	P-10-R4		
S8M	D-4-R4	S13M	P-12-R4		
S9M	D-5-R4	S13M	P-13-R4		
S9M	D-6-R4	S13M	P-14-R4		
S9M	D-7-R4	S13M	P-15-R4		
S9M	E-4-R4	S13M	P-17-R4		
S9M	E-5-R4	S13M	P-18-R4		
S9M	E-6-R4	S13M	M-9-R4		
S9M	E-7-R4	S13M	M-10-R4		
S9M	E-8-R4	S13M	M-11-R4		
S9M	E-9-R4	S13M	M-13-R4		
S9M	F-6-R4	S14M	M-14-R4		
S9M	F-7-R4	S14M	M-16-R4		
S10M	F-8-R4	S14M	M-17-R4		
S10M	F-9-R4	S14M	M-18-R4		
S10M	F-10-R4	S14M	M-20-R4		
S10M	F-11-R4	S14M	N-9-R4		
S10M	G-6-R4	S14M	N-11-R4		
S10M	G-7-R4	S14M	N-12-R4		
S10M	G-8-R4	S14M	N-14-R4		

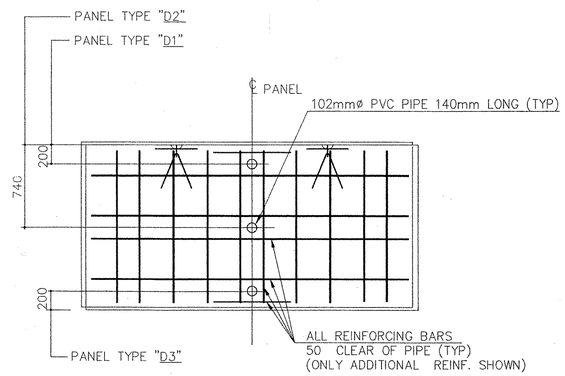

WEEPHOLE LOCATION KEY
(STD. "A" PANEL ONLY- IF REQUIRED)

PENNSYLVANIA DEPARTMENT OF TRANSPORTATION RECOMMENDED
Scott Christ
CHIEF BRIDGE ENGINEER

DEC 13 2004

JOHN E. SANKEY
PENNSYLVANIA

PADOT DRAWING #04-601 BQAD

DIMENSIONS ARE APPROXIMATE DUE TO CONVERSION FROM ENGLISH DIMENSIONING

REV.	DATE	DESCRIPTION
2	12/9/04	REVISED SHEETS S4M AND S6M
1	12/3/04	REV. PER PDOT COMMENTS (11/29/04)

The Reinforced Earth Company
8614 Westwood Center Drive Suite 1100, Vienna, Virginia 22182 (703) 821-1175

"REINFORCED EARTH" is the registered trademark of The Reinforced Earth Company.

PENNA. DEPARTMENT OF TRANSPORTATION
PRECAST CONCRETE WALL PANELS
COUNTY
S.R. _____ SECTION _____
SEG _____ OFFSET _____
CONTRACTOR: REINFORCED EARTH RETAINING WALLS
MANUFACTURER:
THE REINFORCED EARTH CO.
VIENNA, VA.

PRECAST PANEL SHOP DRAWINGS

DRAWN BY: PHL	DATE: 8/31/04	REVISED:	SHEET
CHECKED BY: JES	DATE: 8/31/04		S1M OF S15M
REFERENCE DRAWING:			

CYW/JGT 12/13/04

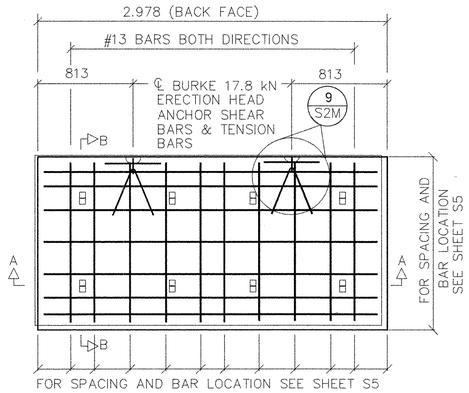

ELEVATION – BACK FACE

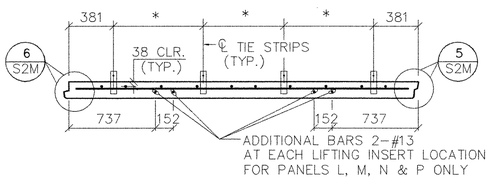

* FOR TIE STRIP SPACING SEE SHEET S3M

SECTION A–A
SCALE 1:20

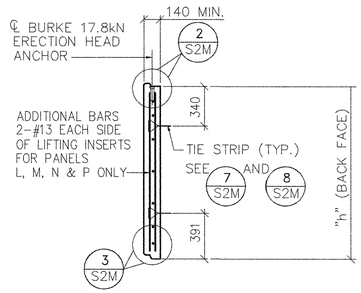

SECTION B–B

PANEL TYPE	"h"
A	1.480
C	546
D	730
E/S	921
F	1.105
G	1.295
K	1.670
L/P	1.854
M	2.045
N	2.229

NOTE:
CONCRETE COVER ON ALL REINFORCEMENT TO BE 38mm MIN.

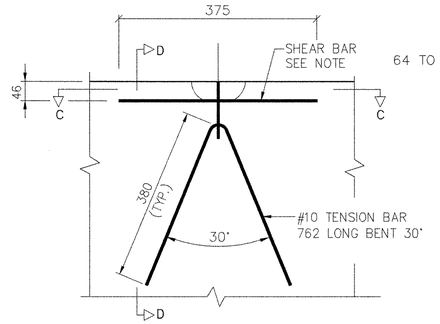

9 S2M TENSION BAR DETAIL

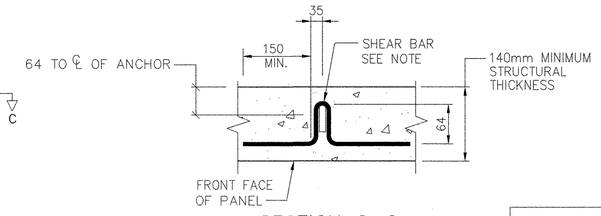

SECTION C–C
(#79140)

NOTE:
SHEAR BAR AS PROVIDED BY BURKE FOR USE WITH 17.8 kN, TWO HOLE, ERECTION HEAD ANCHOR SHEAR BAR #79140.

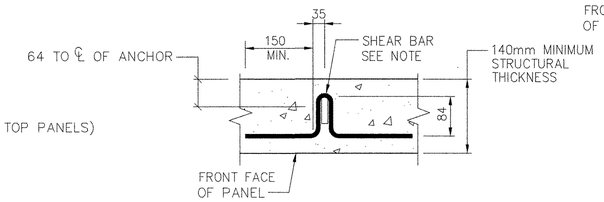

SECTION C–C
(#79141)

NOTE:
SHEAR BAR AS PROVIDED BY BURKE FOR USE WITH 35.6 kN, TWO HOLE, ERECTION HEAD ANCHOR SHEAR BAR #79141.

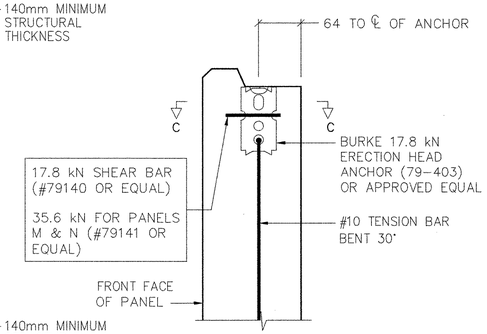

SECTION D–D
ERECTION HEAD
SCALE 3"=1'

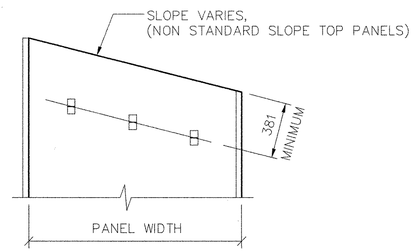

TIE STRIP LOCATIONS
(NON STANDARD SLOPE TOP PANELS)

⊕ COVER ALL JOINTS BETWEEN PANELS ON BACK SIDE OF THE WALL WITH GEOTEXTILE FABRIC CLASS 2. TYPE "A". APPLY ADHESIVE COATING ON PANELS ONLY AND NOT ON GEOTEXTILE FABRIC. DO NOT APPLY ADHESIVE WITHIN 50mm OF THE JOINT.

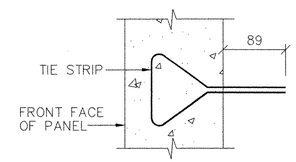

7 S2M SECTION TIE STRIP EMBEDED IN PANEL
SCALE 1:5

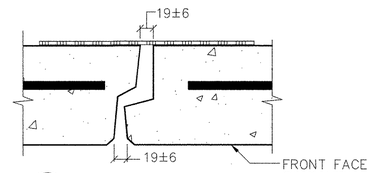

4 S2M VERTICAL JOINT
SCALE 1:5
(LOOKING UP PANEL)

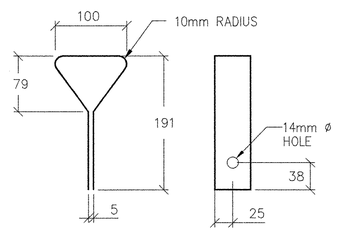

8 S2M TIE STRIP DETAIL
SCALE 1:5

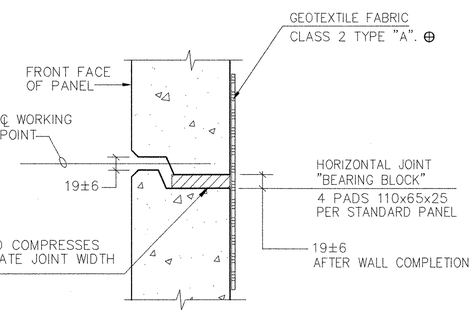

1 S2M HORIZONTAL JOINT
SCALE 1:5

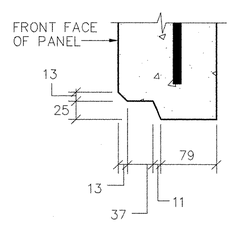

3 S2M SECTION @ PANEL BOTTOM OF SECTION B–B
SCALE 1:5

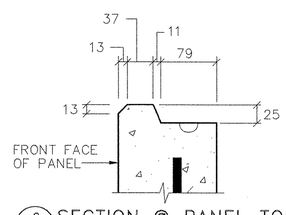

2 S2M SECTION @ PANEL TOP OF SECTION B–B
SCALE 1:5

HORIZONTAL JOINT

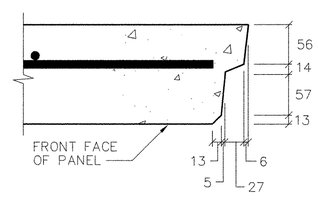

5 S2M SECTION @ PANEL RIGHT SIDE OF SECTION A–A
SCALE 1:5

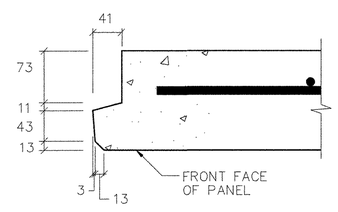

6 S2M SECTION @ PANEL LEFT SIDE OF SECTION A–A
SCALE 1:5

VERTICAL JOINT

DEC 13 2004

PADOT DRAWING #04-601 BOAD

DIMENSIONS ARE APPROXIMATE DUE TO CONVERSION FROM ENGLISH DIMENSIONING

REV.	DATE	DESCRIPTION

The Reinforced Earth Company
8614 Westwood Center Drive Suite 1100, Vienna, Virginia 22182 (703) 821-1175

"REINFORCED EARTH" is the registered trademark of The Reinforced Earth Company.

PENNA. DEPARTMENT OF TRANSPORTATION
PRECAST CONCRETE WALL PANELS
COUNTY
S.R. _____ SECTION _____
SEG _____ OFFSET _____
CONTRACTOR: REINFORCED EARTH RETAINING WALLS
MANUFACTURER:
THE REINFORCED EARTH CO.
VIENNA, VA.

PRECAST PANEL SHOP DRAWINGS

DRAWN BY: PHL	DATE: 8/31/04	REVISED:	SHEET
CHECKED BY: EB	DATE: 8/31/04		S2M OF S15M
REFERENCE DRAWING:			

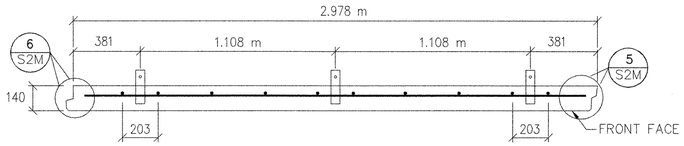

HORIZONTAL SECTION W/3 TIE STRIPS

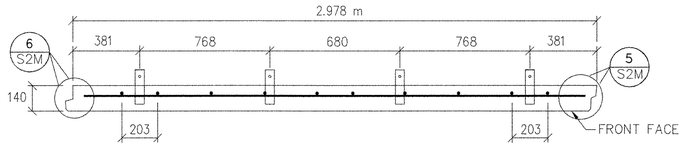

HORIZONTAL SECTION W/4 TIE STRIPS

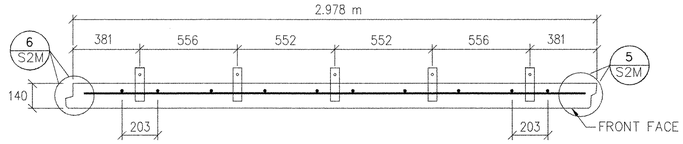

HORIZONTAL SECTION W/5 TIE STRIPS

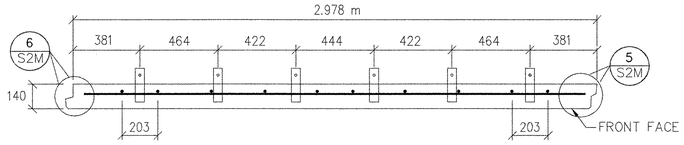

HORIZONTAL SECTION W/6 TIE STRIPS

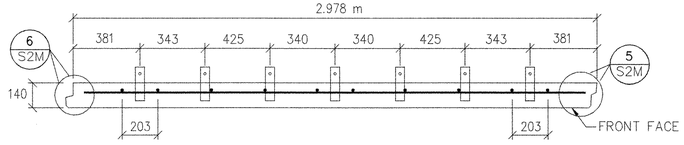

HORIZONTAL SECTION W/7 TIE STRIPS

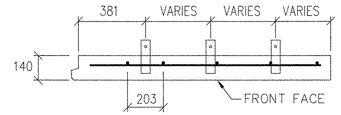

HORIZONTAL SECTION
LEFT CUT PANEL
(LOOKING UP PANEL FROM REAR FACE)

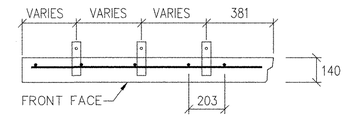

HORIZONTAL SECTION
RIGHT CUT PANEL
(LOOKING UP PANEL FROM REAR FACE)

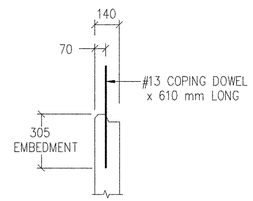

SECTION A–A
AT TOP W/DOWELS

NOTE: USE A PANEL WITH A FLAT TOP WHEN USING COPING DOWELS.

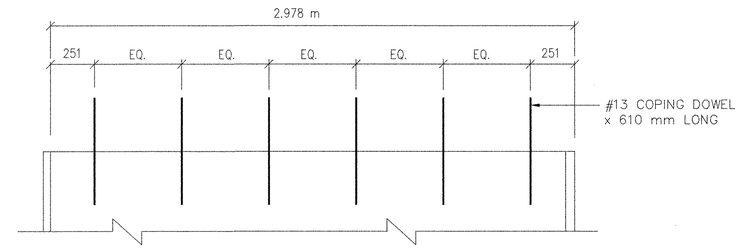

COPING DOWEL DETAILS
(BACK FACE)

NOTE:

1) ALL HORIZONTAL AND VERTICAL REBAR SHOWN IS #13, UNLESS OTHERWISE NOTED ON THE INDIVIDUAL PANEL DETAILS.

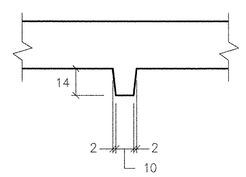

1 S3M BEARING PAD RECESS

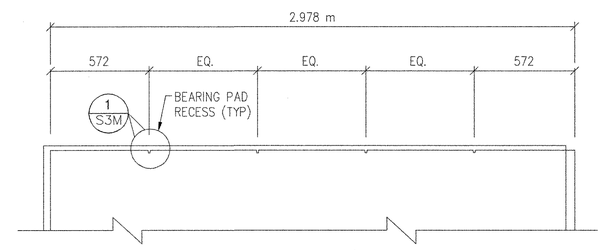

BEARING PAD DETAIL
(BACK FACE)

DEC 13 2004

PADOT DRAWING #04-601 BQAD

DIMENSIONS ARE APPROXIMATE DUE TO CONVERSION FROM ENGLISH DIMENSIONING

PENNA. DEPARTMENT OF TRANSPORTATION
PRECAST CONCRETE WALL PANELS

COUNTY
S.R. _____ SECTION _____
SEG _____ OFFSET _____

CONTRACTOR: REINFORCED EARTH RETAINING WALLS

MANUFACTURER:
THE REINFORCED EARTH CO.
VIENNA, VA.

REV.	DATE	DESCRIPTION

The Reinforced Earth Company
8614 Westwood Center Drive Suite 1100, Vienna, Virginia 22182 (703) 821-1175

"REINFORCED EARTH" is the registered trademark of The Reinforced Earth Company.

PRECAST PANEL SHOP DRAWINGS

DRAWN BY: PHL	DATE: 8/31/04	REVISED:	SHEET
CHECKED BY: PS	DATE: 8/31/04		S3M OF S15M
REFERENCE DRAWING:			

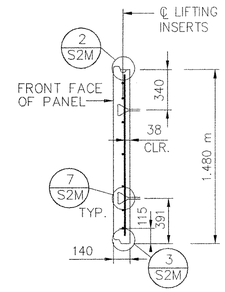

1 S4M SECTION B–B PANEL "A"
(A6 THRU A14)

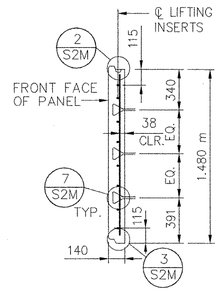

1 S4M SECTION B–B PANEL "A"
(A15 THRU A21)

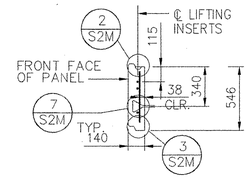

3 S4M SECTION B–B PANEL "C"

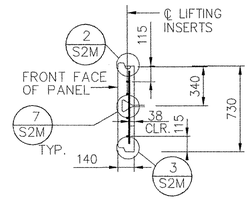

2 S4M SECTION B–B PANEL "D"

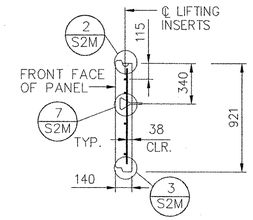

4 S4M SECTION B–B PANEL "E"
"TOP PANEL ONLY"

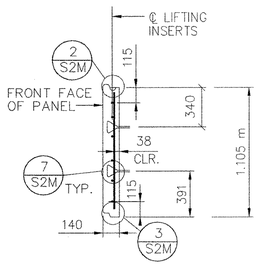

5 S4M SECTION B–B PANEL "F"

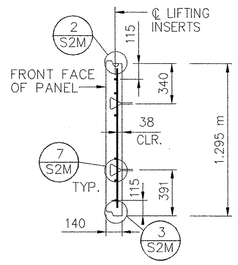

6 S4M SECTION B–B PANEL "G"

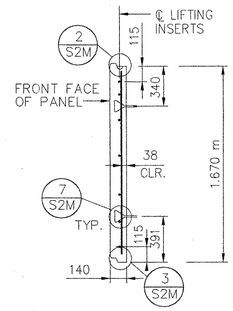

7 S4M SECTION B–B PANEL "K"
(K6 THRU K14

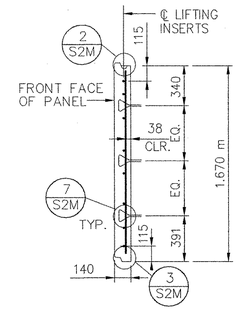

7 S4M SECTION B–B PANEL "K"
(K15 THRU K21)

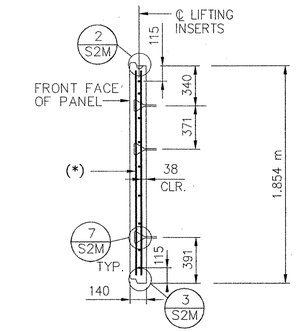

8 S4M SECTION B–B PANEL "L"
* ADDITIONAL BARS 2–#13 AT EACH LIFTING INSERT LOCATION

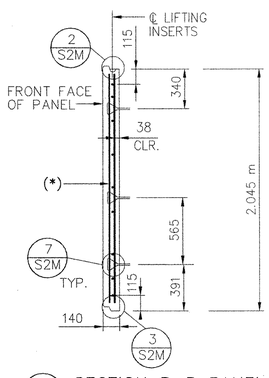

9 S4M SECTION B–B PANEL "M"
* ADDITIONAL BARS 2–#13 AT EACH LIFTING INSERT LOCATION

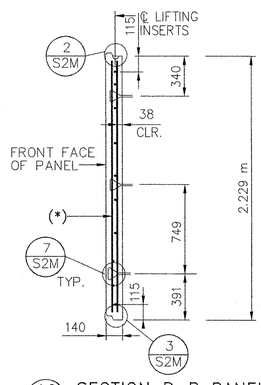

10 S4M SECTION B–B PANEL "N"
* ADDITIONAL BARS 2–#13 AT EACH LIFTING INSERT LOCATION

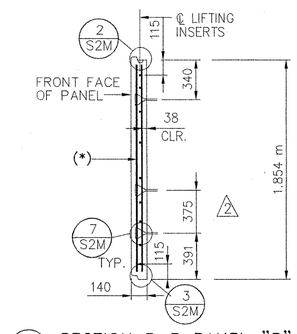

11 S4M SECTION B–B PANEL "P"
"BOTTOM PANEL ONLY"
* ADDITIONAL BARS 2–#13 AT EACH LIFTING INSERT LOCATION

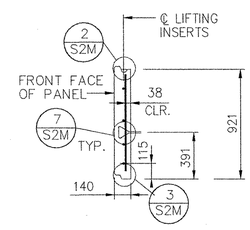

12 S4M SECTION B–B PANEL "S"
"BOTTOM PANEL ONLY"

DEC 13 2004

PADOT DRAWING #04-601 BQAD

DIMENSIONS ARE APPROXIMATE DUE TO CONVERSION FROM ENGLISH DIMENSIONING

REV.	DATE	DESCRIPTION
2	12/9/04	REVISED DIMENSION
1	12/3/04	REV. PER PDOT COMMENTS (11/29/04)

The Reinforced Earth Company
8614 Westwood Center Drive Suite 1100, Vienna, Virginia 22182 (703) 821-1175

"REINFORCED EARTH" is the registered trademark of The Reinforced Earth Company.

PENNA. DEPARTMENT OF TRANSPORTATION
PRECAST CONCRETE WALL PANELS
COUNTY
S.R. _____ SECTION _____
SEG _____ OFFSET _____
CONTRACTOR: REINFORCED EARTH RETAINING WALLS
MANUFACTURER:
THE REINFORCED EARTH CO.
VIENNA, VA.

PRECAST PANEL SHOP DRAWINGS

DRAWN BY: PHL	DATE: 8/31/04	REVISED:	SHEET S4M OF S15M
CHECKED BY:	DATE: 8/31/04		
REFERENCE DRAWING:			

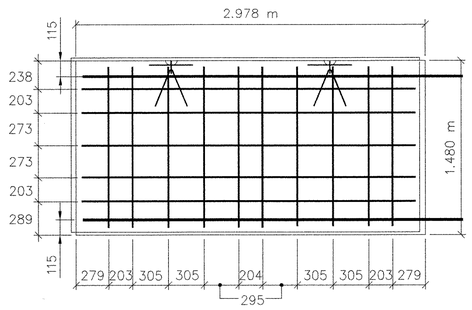

PANEL A
(A6 THRU A14)

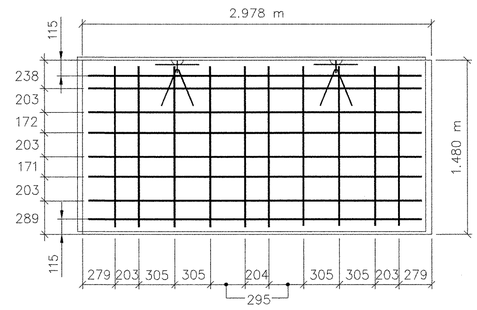

PANEL A
(A15 THRU A21)

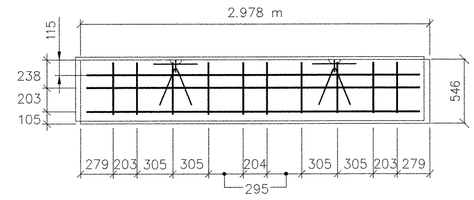

PANEL C

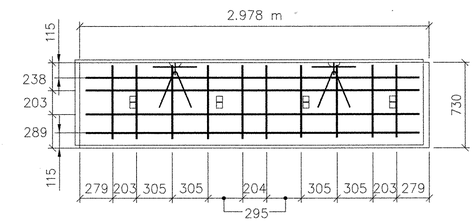

PANEL D

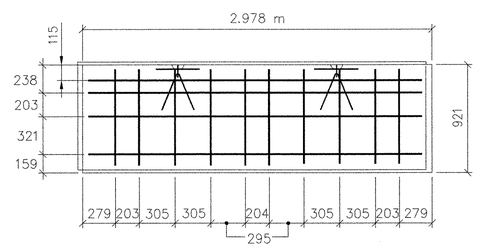

PANEL E
"TOP PANEL ONLY"

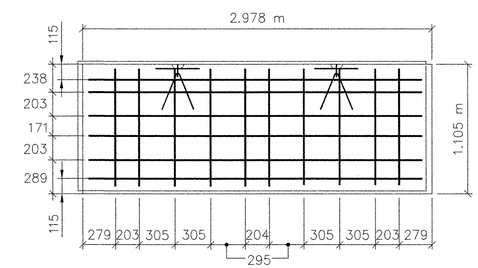

PANEL F

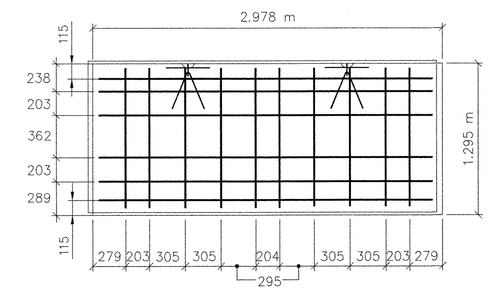

PANEL G

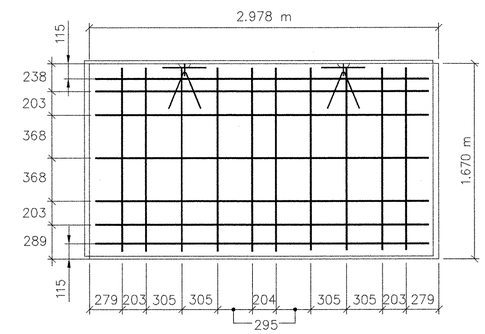

PANEL K
(K7 THRU K14)

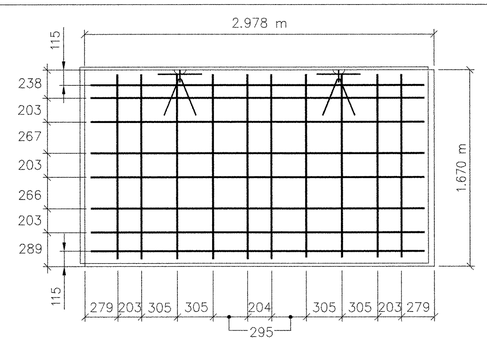

PANEL K
(K15 THRU K21)

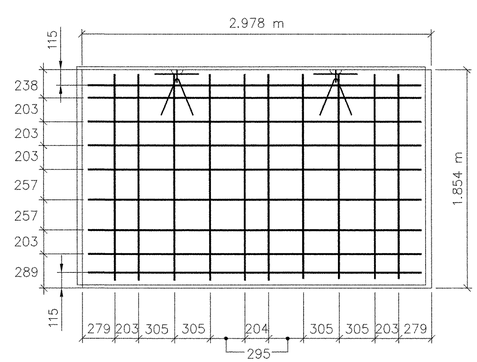

PANEL L

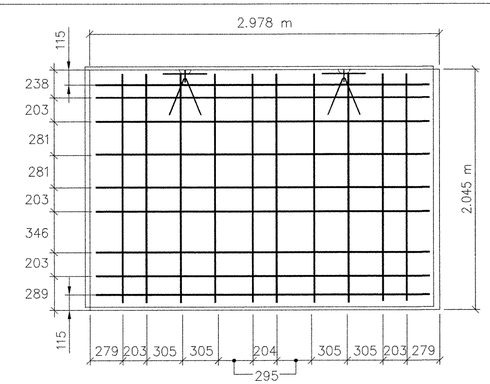

PANEL M

DEC 13 2004

PADOT DRAWING #04-601 BQAD

DIMENSIONS ARE APPROXIMATE DUE TO CONVERSION FROM ENGLISH DIMENSIONING

REV.	DATE	DESCRIPTION
1	12/3/04	REV. PER PDOT COMMENTS (11/29/04)

The Reinforced Earth Company
8614 Westwood Center Drive Suite 1100, Vienna, Virginia 22182 (703) 821-1175

"REINFORCED EARTH" is the registered trademark of The Reinforced Earth Company.

PENNA. DEPARTMENT OF TRANSPORTATION
PRECAST CONCRETE WALL PANELS
COUNTY
S.R. _____ SECTION _____
SEG _____ OFFSET _____
CONTRACTOR: REINFORCED EARTH RETAINING WALLS
MANUFACTURER:
THE REINFORCED EARTH CO.
VIENNA, VA.

PRECAST PANEL SHOP DRAWINGS

DRAWN BY: PHL	DATE: 8/31/04	REVISED:	SHEET
CHECKED BY: JES	DATE: 8/31/04		S5M OF S15M
REFERENCE DRAWING:			

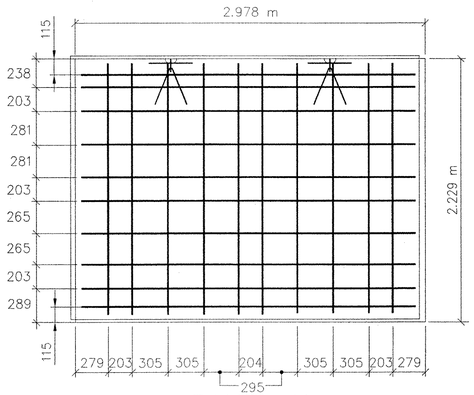

PANEL N

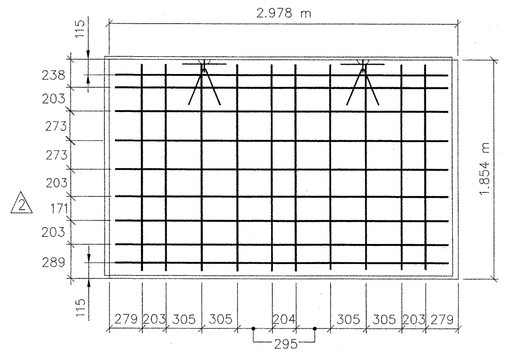

PANEL P

"BOTTOM PANEL ONLY"

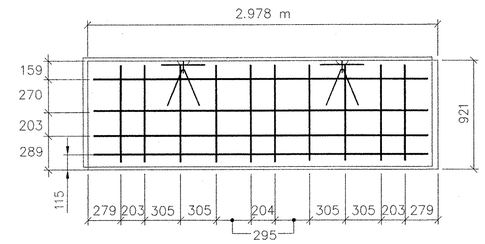

PANEL S

"BOTTOM PANEL ONLY"

DEC 13 2004

PADOT DRAWING #04-601 BQAD

PENNA. DEPARTMENT OF TRANSPORTATION
PRECAST CONCRETE WALL PANELS

COUNTY

S.R. _____ SECTION _____

SEG _____ OFFSET _____

CONTRACTOR: REINFORCED EARTH RETAINING WALLS

MANUFACTURER:

THE REINFORCED EARTH CO.
VIENNA, VA.

PRECAST PANEL SHOP DRAWINGS

REV.	DATE	DESCRIPTION
2	12/9/04	REVISED DIMENSION
1	12/3/04	REV. PER PDOT COMMENTS (11/29/04)

The Reinforced Earth Company
8614 Westwood Center Drive Suite 1100, Vienna, Virginia 22182 (703) 821-1175

"REINFORCED EARTH" is the registered trademark of The Reinforced Earth Company.

DRAWN BY: PHL	DATE: 8/31/04	REVISED:	SHEET
CHECKED BY:	DATE: 8/31/04		S6M OF S15M
REFERENCE DRAWING:			

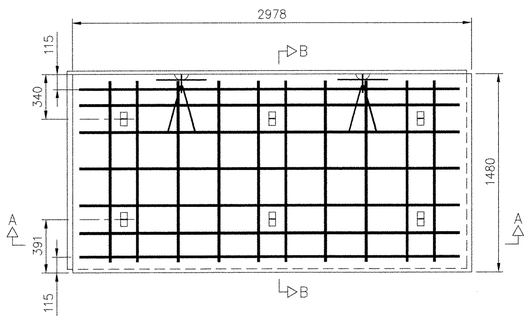

A-6

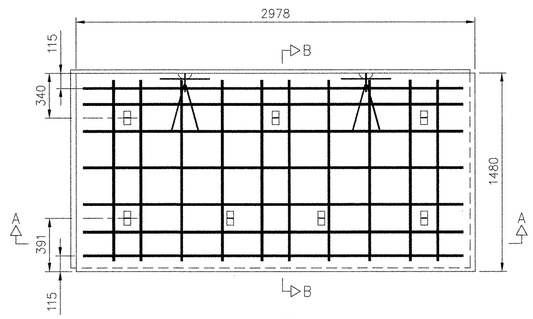

A-7

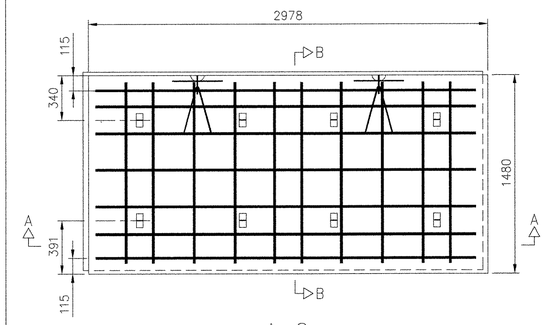

A-8

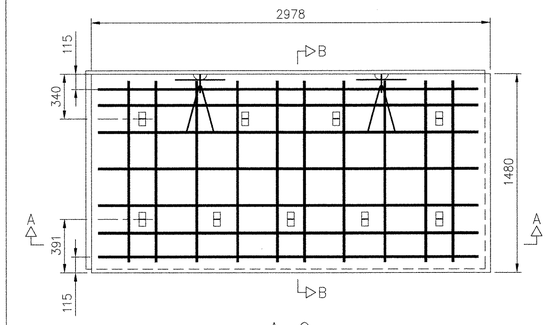

A-9

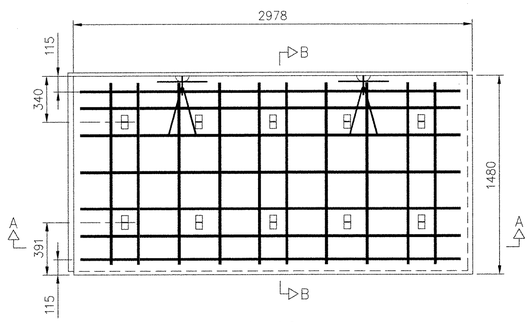

A-10

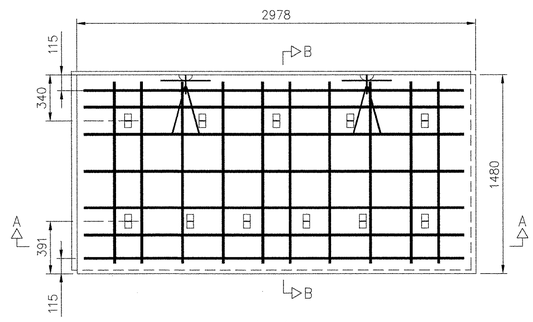

A-11

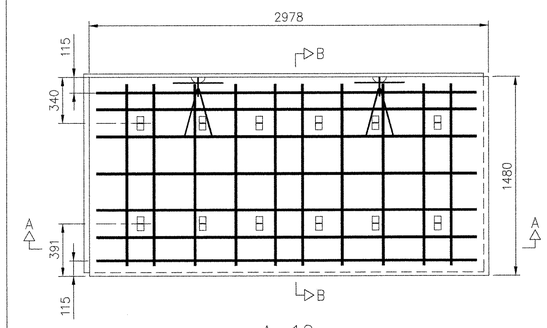

A-12

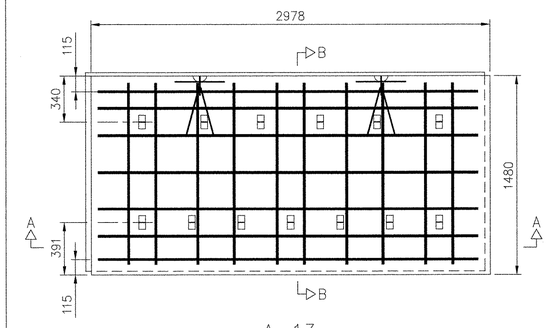

A-13

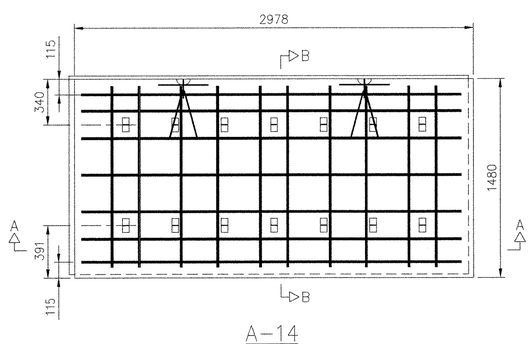

A-14

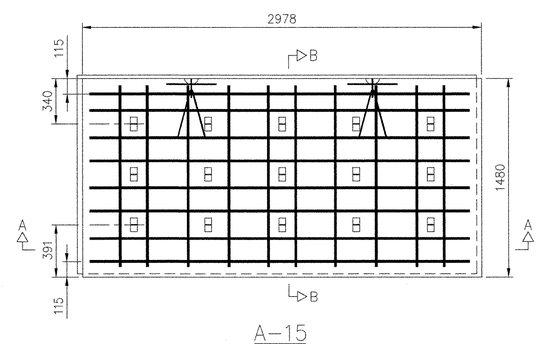

A-15

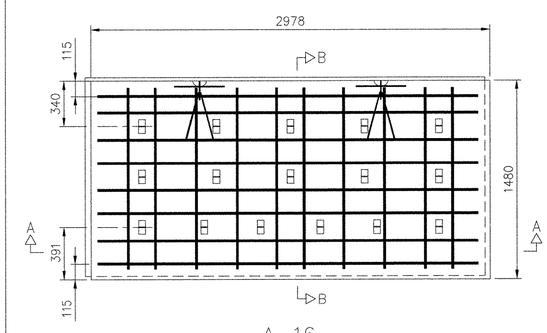

A-16

DEC 13 2004

PADOT DRAWING #04-601 BOAD

DIMENSIONS ARE APPROXIMATE DUE TO CONVERSION FROM ENGLISH DIMENSIONING

PENNA. DEPARTMENT OF TRANSPORTATION
PRECAST CONCRETE WALL PANELS

COUNTY
S.R. _____ SECTION _____
SEG _____ OFFSET _____

CONTRACTOR: REINFORCED EARTH RETAINING WALLS

MANUFACTURER:
THE REINFORCED EARTH CO.
VIENNA, VA.

PRECAST PANEL SHOP DRAWINGS

REV.	DATE	DESCRIPTION
1	12/3/04	REV. PER PDOT COMMENTS (11/29/04)

The Reinforced Earth Company
8614 Westwood Center Drive Suite 1100, Vienna, Virginia 22182 (703) 821-1175

"REINFORCED EARTH" is the registered trademark of The Reinforced Earth Company.

DRAWN BY: PHL	DATE: 8/31/04	REVISED:	SHEET
CHECKED BY: KS	DATE: 8/31/04		S7M OF S15M
REFERENCE DRAWING:			

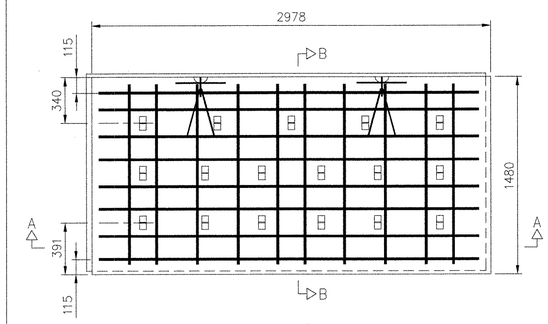

A-17

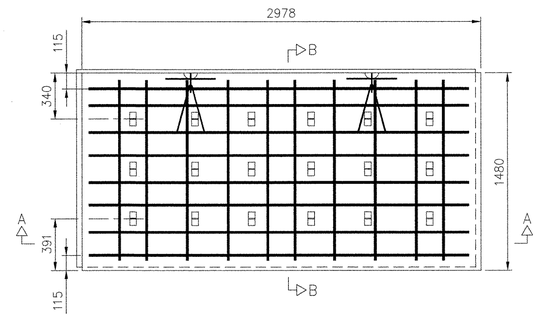

A-18

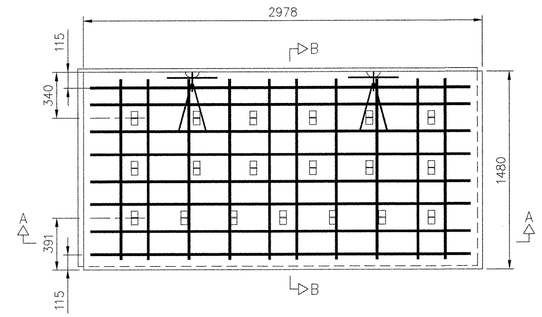

A-19

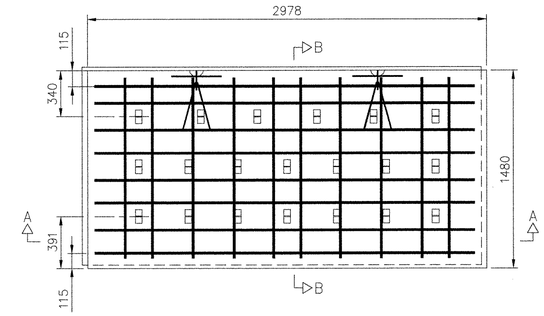

A-20

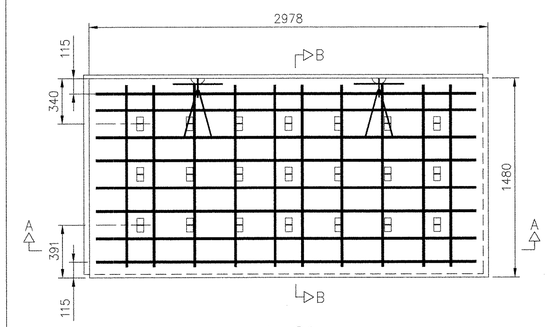

A-21

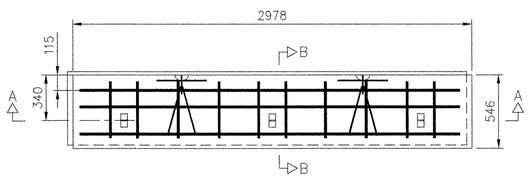

C-3

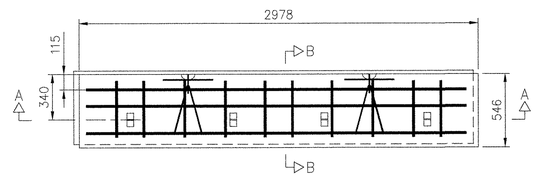

C-4

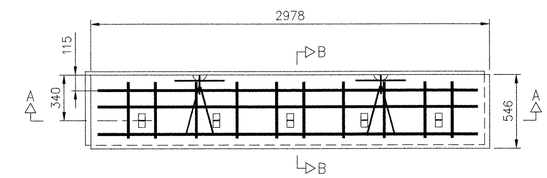

C-5

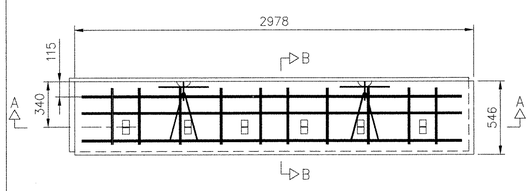

C-6

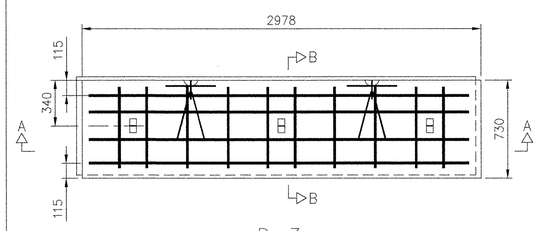

D-3

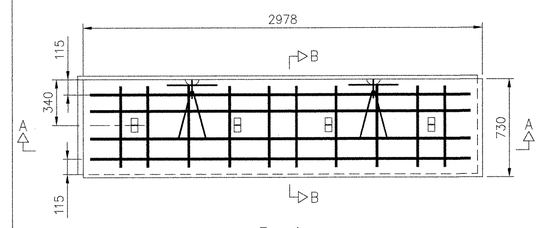

D-4

DEC 13 2004

PADOT DRAWING #04-601 BQAD

DIMENSIONS ARE APPROXIMATE DUE TO CONVERSION FROM ENGLISH DIMENSIONING

PENNA. DEPARTMENT OF TRANSPORTATION
PRECAST CONCRETE WALL PANELS

COUNTY

S.R. _____ SECTION _____

SEG _____ OFFSET _____

CONTRACTOR: REINFORCED EARTH RETAINING WALLS

MANUFACTURER:

THE REINFORCED EARTH CO.
VIENNA, VA.

REV.	DATE	DESCRIPTION
1	12/3/04	REV. PER PDOT COMMENTS (11/29/04)

The Reinforced Earth Company
8614 Westwood Center Drive Suite 1100, Vienna, Virginia 22182 (703) 821-1175

"REINFORCED EARTH" is the registered trademark of The Reinforced Earth Company.

PRECAST PANEL SHOP DRAWINGS

DRAWN BY: PHL	DATE: 8/31/04	REVISED:	SHEET
CHECKED BY: PS	DATE: 8/31/04		S8M OF S15M
REFERENCE DRAWING:			

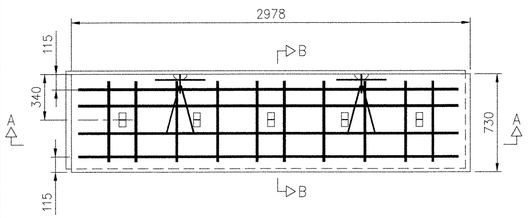

D-5

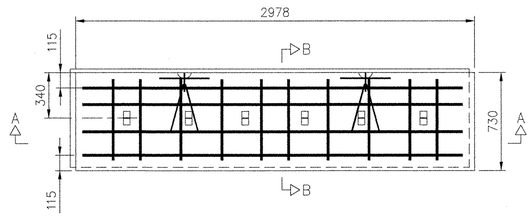

D-6

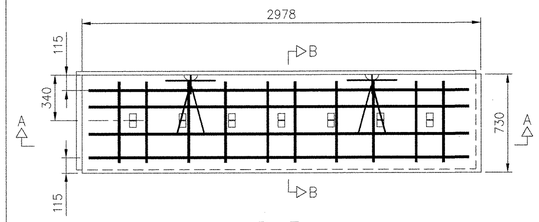

D-7

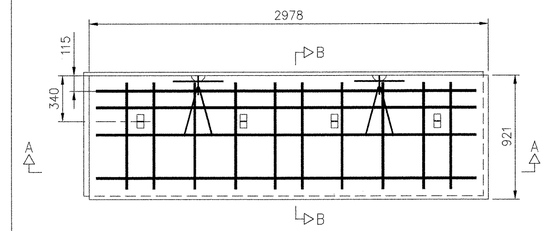

E-4

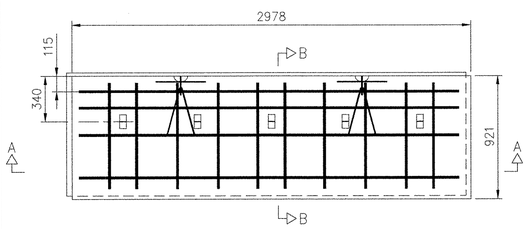

E-5

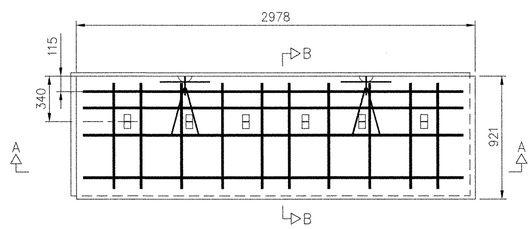

E-6

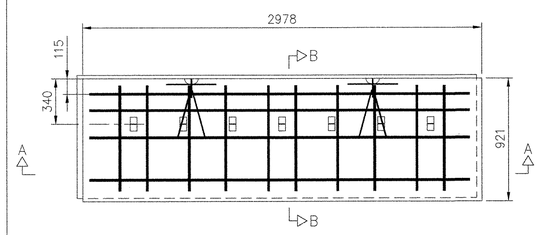

E-7

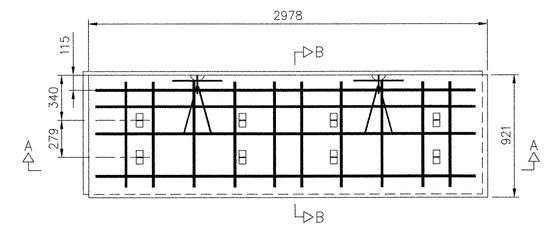

E-8

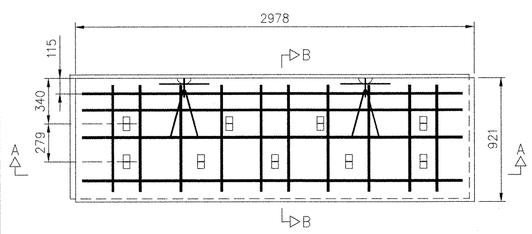

E-9

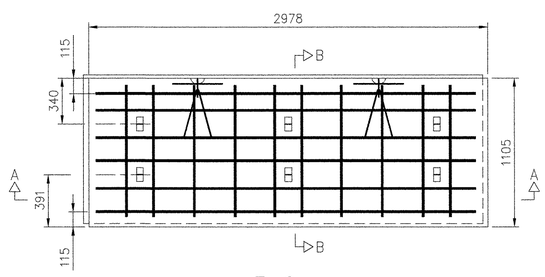

F-6

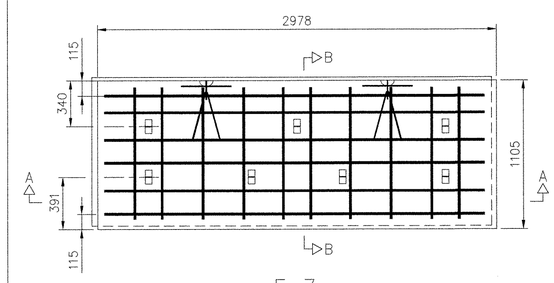

F-7

DEC 13 2004

PADOT DRAWING #04-601 BOAD

DIMENSIONS ARE APPROXIMATE DUE TO CONVERSION FROM ENGLISH DIMENSIONING

PENNA. DEPARTMENT OF TRANSPORTATION
PRECAST CONCRETE WALL PANELS
COUNTY
S.R. _____ SECTION _____
SEG _____ OFFSET _____
CONTRACTOR: REINFORCED EARTH RETAINING WALLS
MANUFACTURER:
THE REINFORCED EARTH CO.
VIENNA, VA.

REV.	DATE	DESCRIPTION
1	12/3/04	REV. PER PDOT COMMENTS (11/29/04)

The Reinforced Earth Company
8614 Westwood Center Drive Suite 1100, Vienna, Virginia 22182 (703) 821-1175

"REINFORCED EARTH" is the registered trademark of The Reinforced Earth Company.

PRECAST PANEL SHOP DRAWINGS

DRAWN BY: PHL	DATE: 8/31/04	REVISED:	SHEET
CHECKED BY: BS	DATE: 8/31/04		S9M OF S15M
REFERENCE DRAWING:			

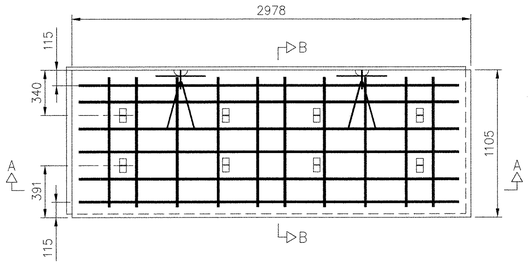

F-8

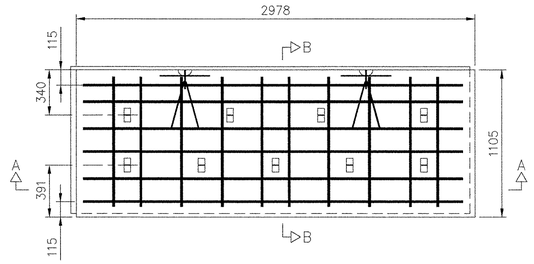

F-9

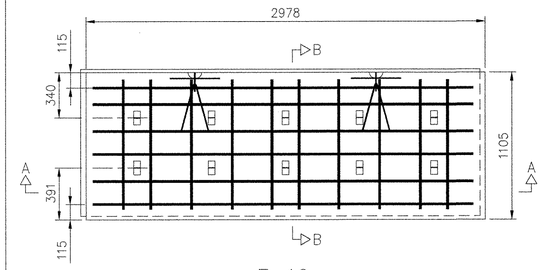

F-10

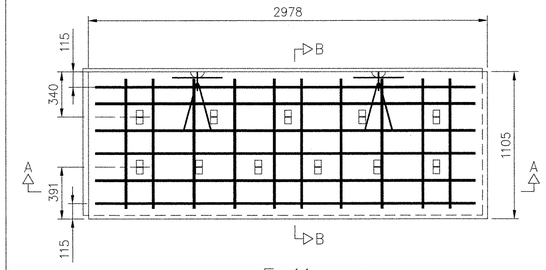

F-11

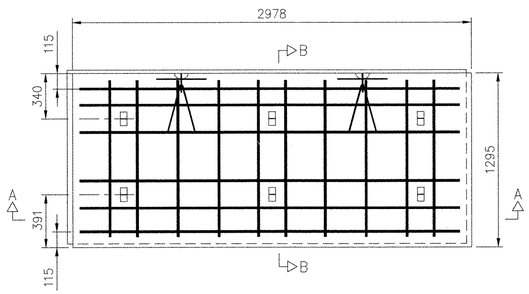

G-6

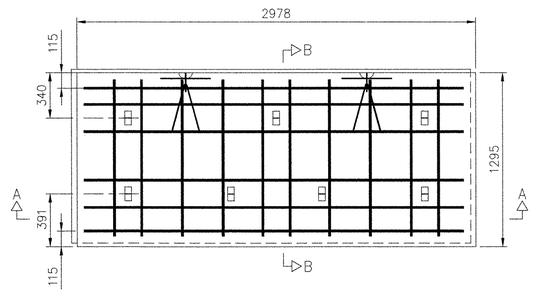

G-7

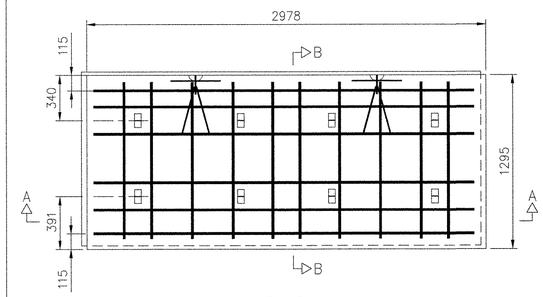

G-8

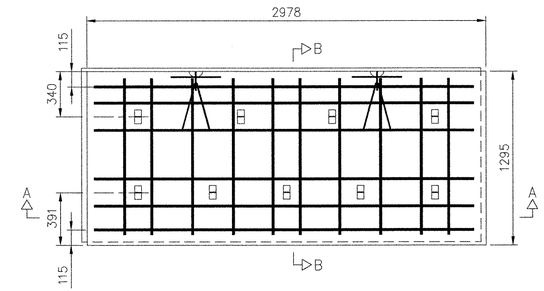

G-9

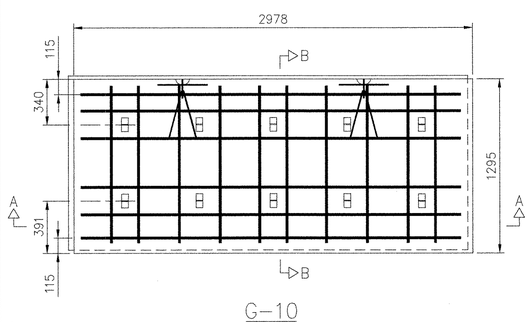

G-10

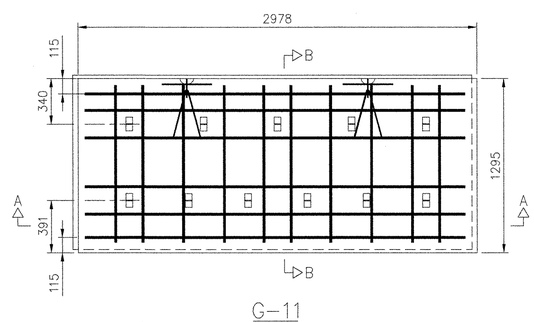

G-11

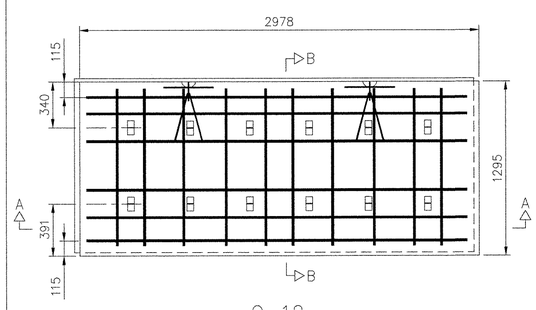

G-12

DEC 13 2004

PADOT DRAWING #04-601 BQAD

DIMENSIONS ARE APPROXIMATE DUE TO CONVERSION FROM ENGLISH DIMENSIONING

PENNA. DEPARTMENT OF TRANSPORTATION
PRECAST CONCRETE WALL PANELS

COUNTY

S.R. _____ SECTION _____

SEG _____ OFFSET _____

CONTRACTOR: REINFORCED EARTH RETAINING WALLS

MANUFACTURER:

THE REINFORCED EARTH CO.
VIENNA, VA.

PRECAST PANEL SHOP DRAWINGS

REV.	DATE	DESCRIPTION
1	12/3/04	REV. PER PDOT COMMENTS (11/29/04)

The Reinforced Earth Company
8614 Westwood Center Drive Suite 1100, Vienna, Virginia 22182 (703) 821-1175

"REINFORCED EARTH" is the registered trademark of The Reinforced Earth Company.

DRAWN BY: PHL	DATE: 8/31/04	REVISED:	SHEET
CHECKED BY: JES	DATE: 8/31/04		S10M OF S15M
REFERENCE DRAWING:			

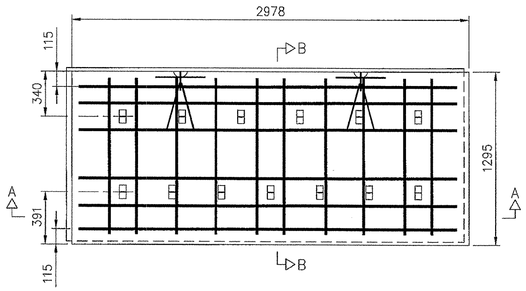

G-13

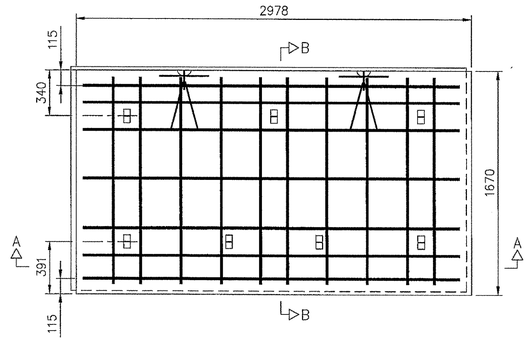

K-7

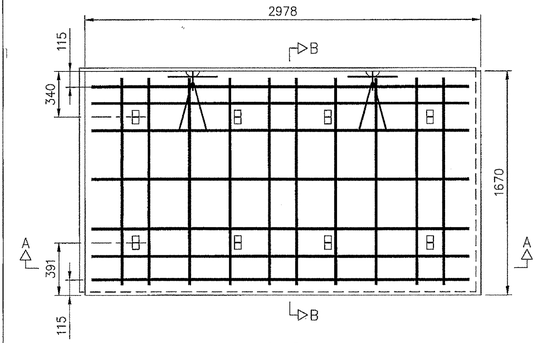

K-8

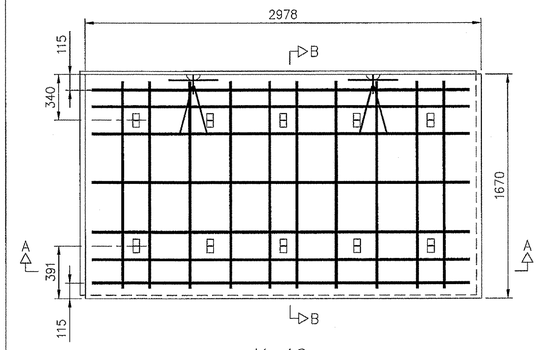

K-10

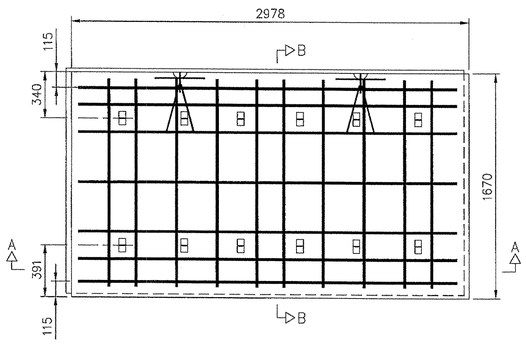

K-12

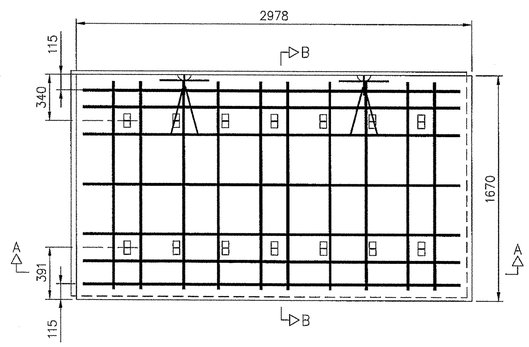

K-14

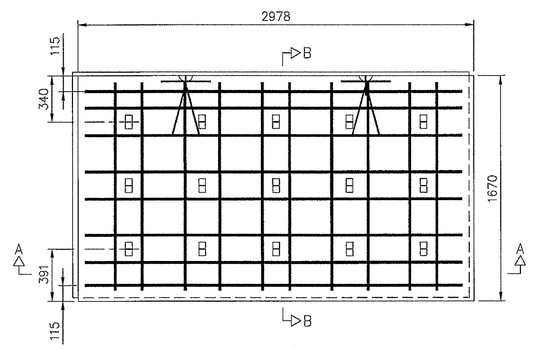

K-15

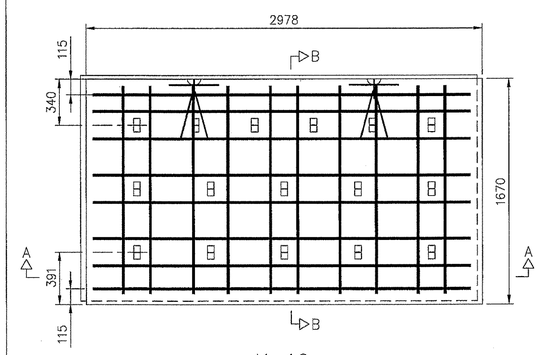

K-16

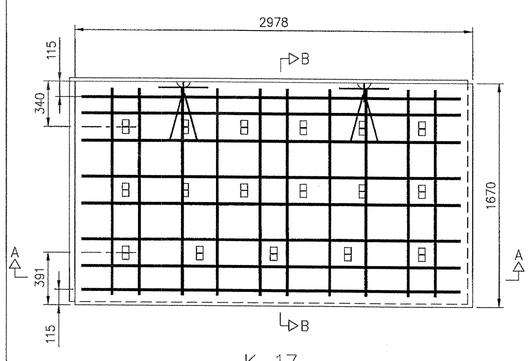

K-17

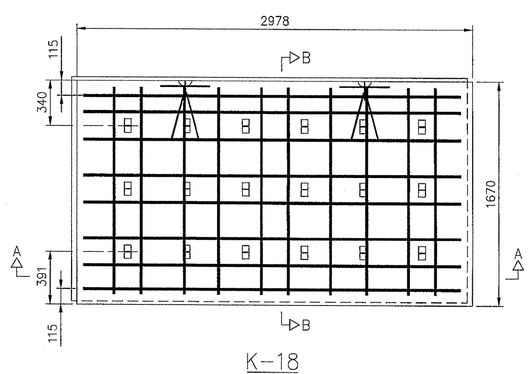

K-18

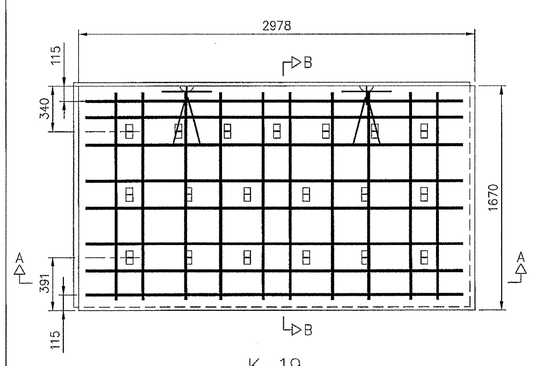

K-19

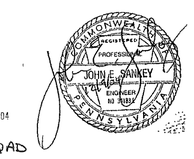

DEC 13 2004

PADOT DRAWING #04-601 BQAD

DIMENSIONS ARE APPROXIMATE DUE TO CONVERSION FROM ENGLISH DIMENSIONING

REV.	DATE	DESCRIPTION
1	12/3/04	REV. PER PDOT COMMENTS (11/29/04)

The Reinforced Earth Company
8614 Westwood Center Drive Suite 1100, Vienna, Virginia 22182 (703) 821-1175

"REINFORCED EARTH" is the registered trademark of The Reinforced Earth Company.

PENNA. DEPARTMENT OF TRANSPORTATION
PRECAST CONCRETE WALL PANELS
COUNTY
S.R. _____ SECTION _____
SEG _____ OFFSET _____
CONTRACTOR: REINFORCED EARTH RETAINING WALLS
MANUFACTURER:
THE REINFORCED EARTH CO.
VIENNA, VA.

PRECAST PANEL SHOP DRAWINGS

DRAWN BY: PHL	DATE: 8/31/04	REVISED:	SHEET
CHECKED BY:	DATE: 8/31/04		S11M OF S15M
REFERENCE DRAWING:			

DISTRICT
RE-XXXX
SHT-INFO

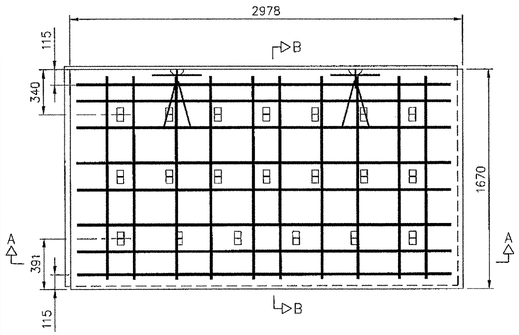

K-20

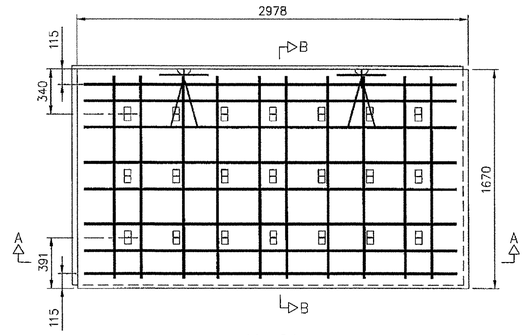

K-21

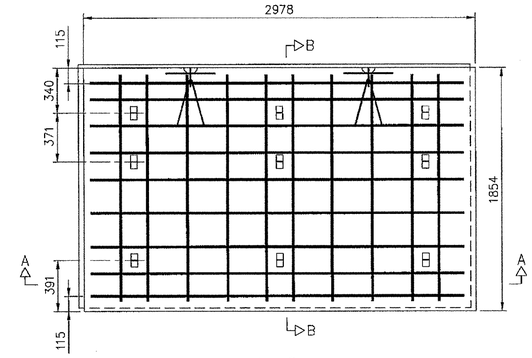

L-9

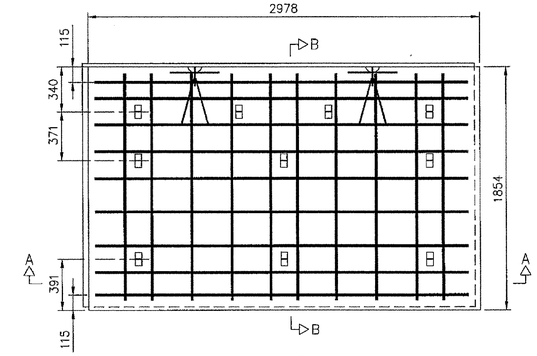

L-10

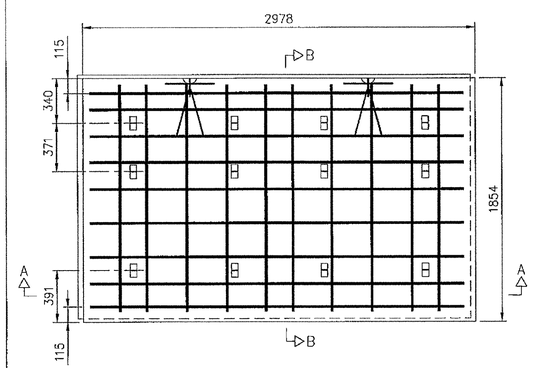

L-12

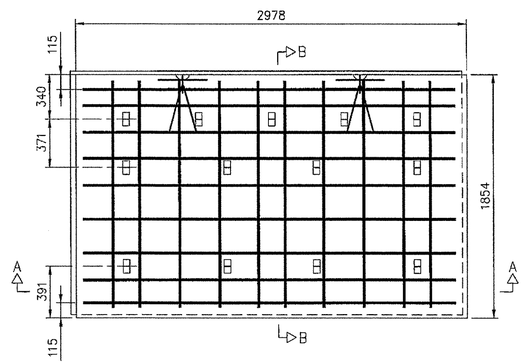

L-13

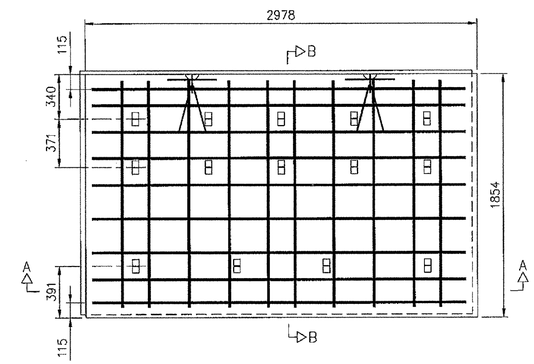

L-14

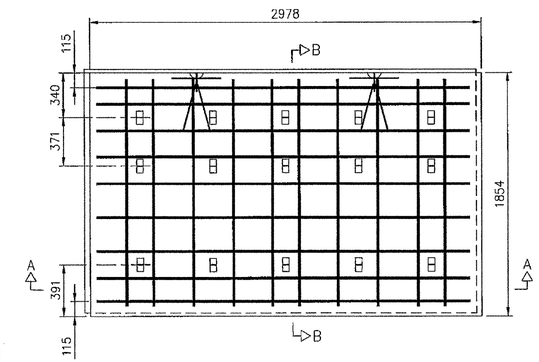

L-15

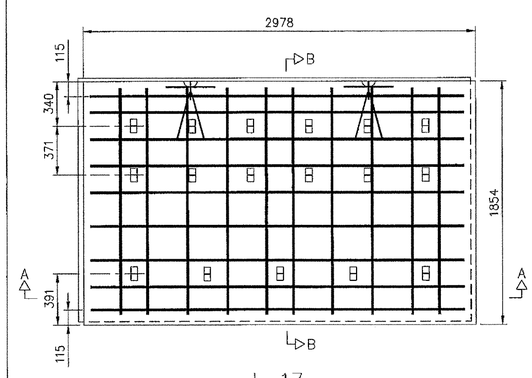

L-17

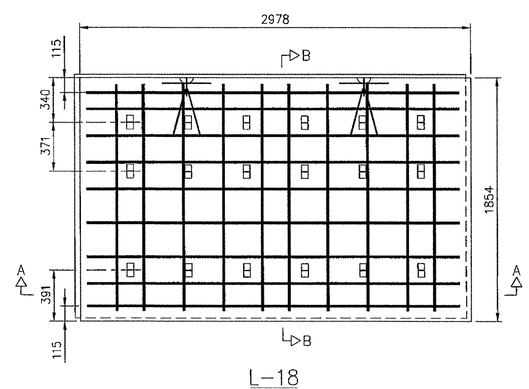

L-18

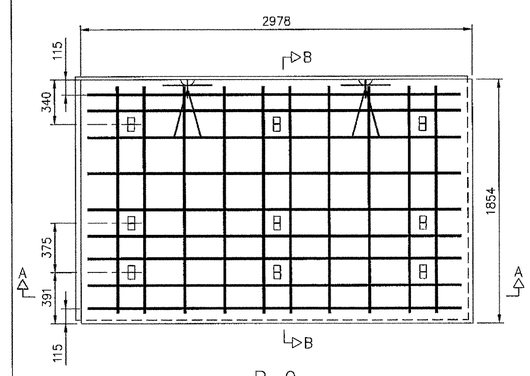

P-9

DEC 13 2004

PADOT DRAWING #04-601 BRAD

DIMENSIONS ARE APPROXIMATE DUE TO CONVERSION FROM ENGLISH DIMENSIONING

REV.	DATE	DESCRIPTION
1	12/3/04	REV. PER PDOT COMMENTS (11/29/04)

The Reinforced Earth Company
8614 Westwood Center Drive Suite 1100, Vienna, Virginia 22182 (703) 821-1175

"REINFORCED EARTH" is the registered trademark of The Reinforced Earth Company.

PENNA. DEPARTMENT OF TRANSPORTATION
PRECAST CONCRETE WALL PANELS
COUNTY
S.R. _____ SECTION _____
SEG _____ OFFSET _____
CONTRACTOR: REINFORCED EARTH RETAINING WALLS
MANUFACTURER:
THE REINFORCED EARTH CO.
VIENNA, VA.

PRECAST PANEL SHOP DRAWINGS

DRAWN BY: PHL	DATE: 8/31/04	REVISED:	SHEET
CHECKED BY:	DATE: 8/31/04		S12M OF S15M
REFERENCE DRAWING:			

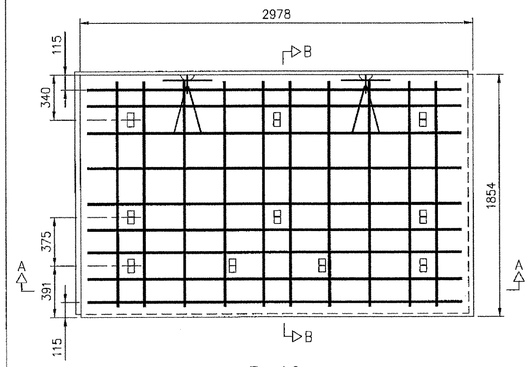

P-10

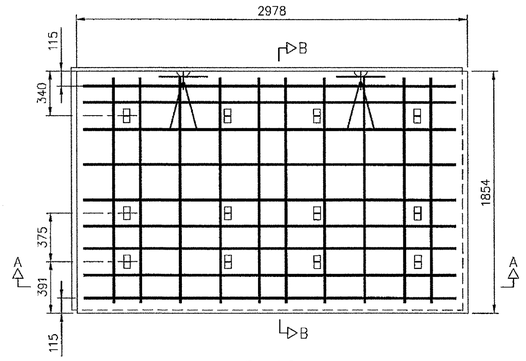

P-12

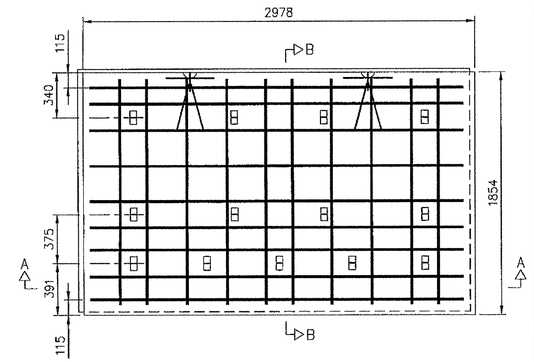

P-13

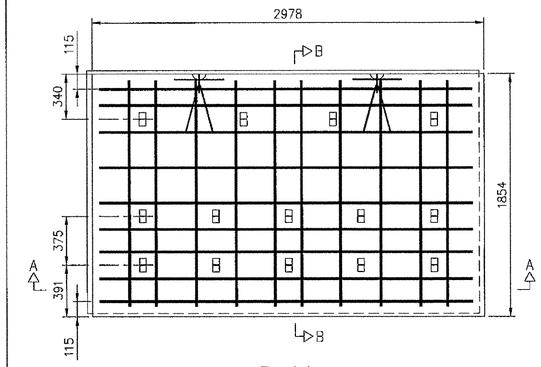

P-14

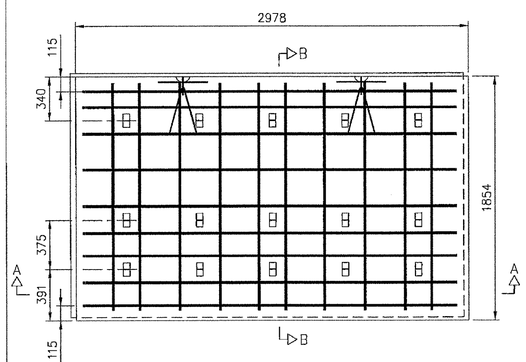

P-15

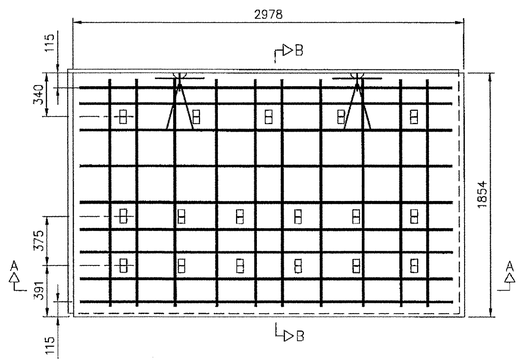

P-17

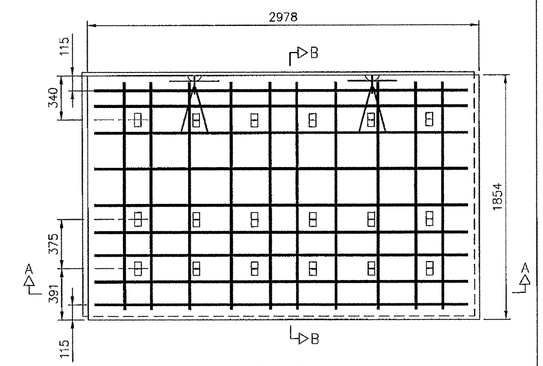

P-18

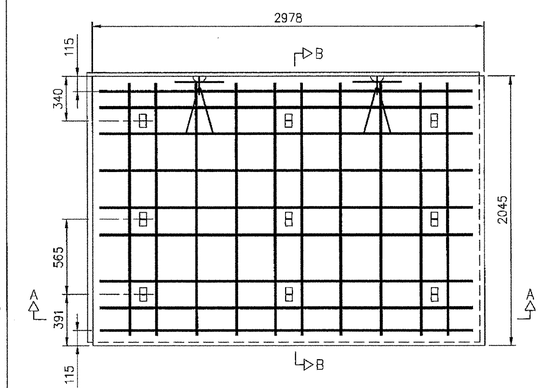

M-9

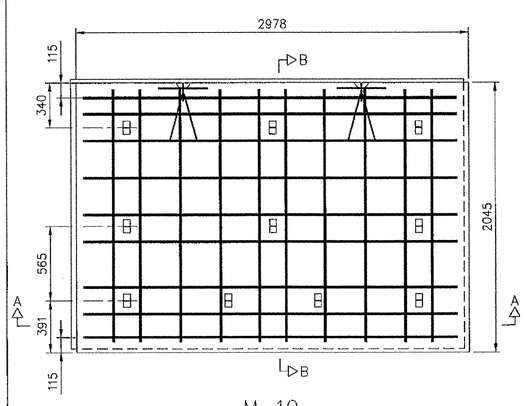

M-10

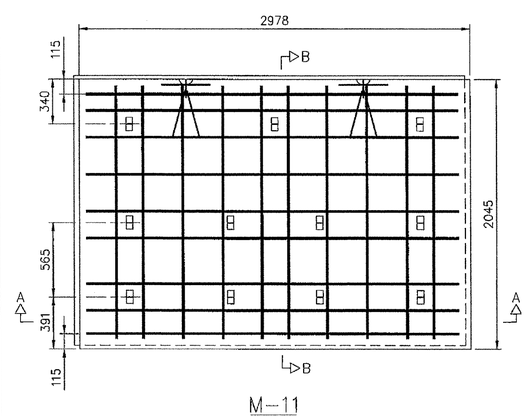

M-11

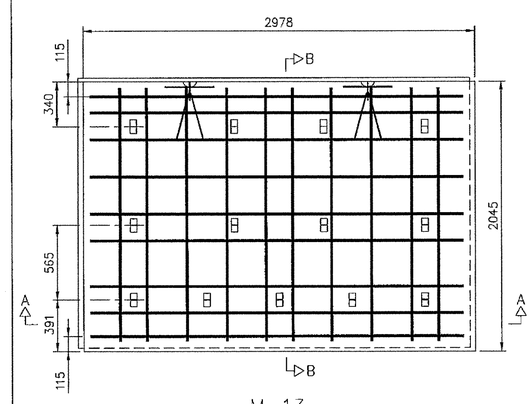

M-13

DEC 13 2004

PADOT DRAWING #04-6001 BQAD

DIMENSIONS ARE APPROXIMATE DUE TO CONVERSION FROM ENGLISH DIMENSIONING

REV.	DATE	DESCRIPTION
1	12/3/04	REV. PER PDOT COMMENTS (11/29/04)

The Reinforced Earth Company
8614 Westwood Center Drive Suite 1100, Vienna, Virginia 22182 (703) 821-1175

"REINFORCED EARTH" is the registered trademark of The Reinforced Earth Company.

PENNA. DEPARTMENT OF TRANSPORTATION
PRECAST CONCRETE WALL PANELS
COUNTY
S.R. _____ SECTION _____
SEG _____ OFFSET _____
CONTRACTOR: REINFORCED EARTH RETAINING WALLS
MANUFACTURER:
THE REINFORCED EARTH CO.
VIENNA, VA.

PRECAST PANEL SHOP DRAWINGS

DRAWN BY: PHL	DATE: 8/31/04	REVISED:	SHEET
CHECKED BY:	DATE: 8/31/04		S13M OF S15M
REFERENCE DRAWING:			

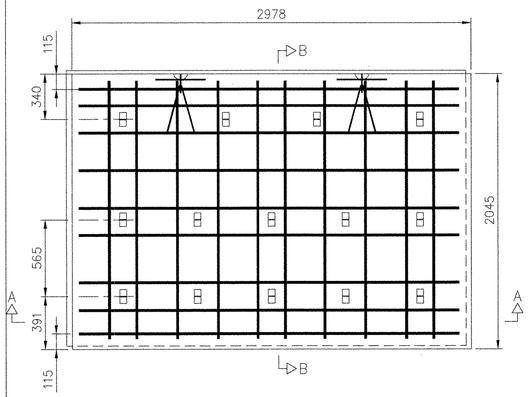

M-14

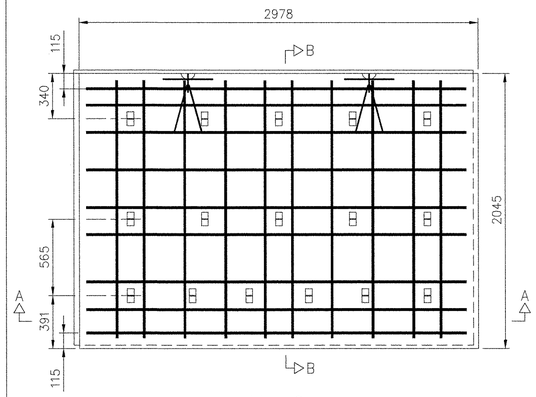

M-16

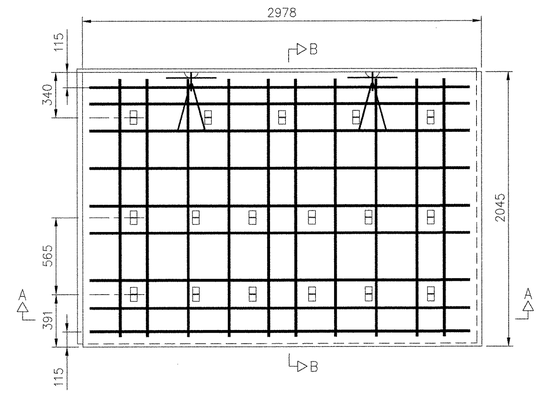

M-17

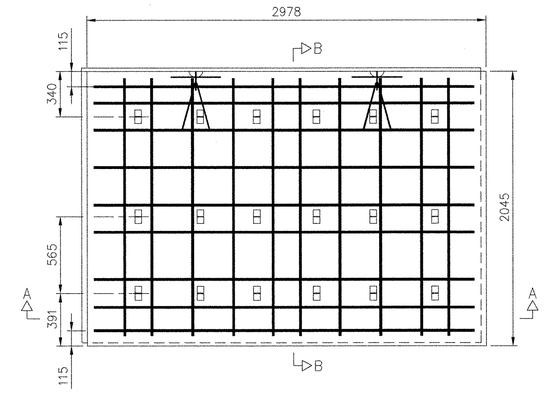

M-18

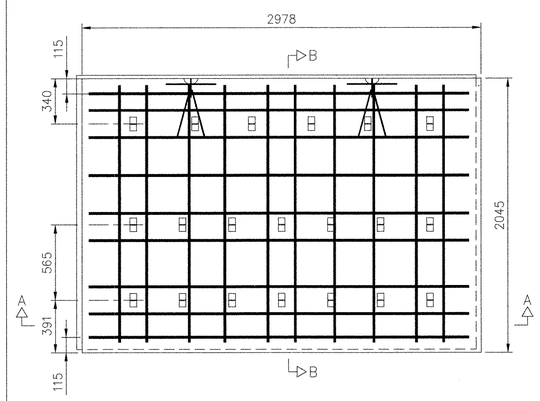

M-20

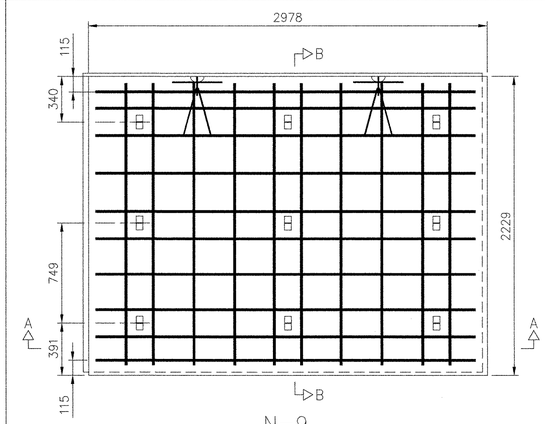

N-9

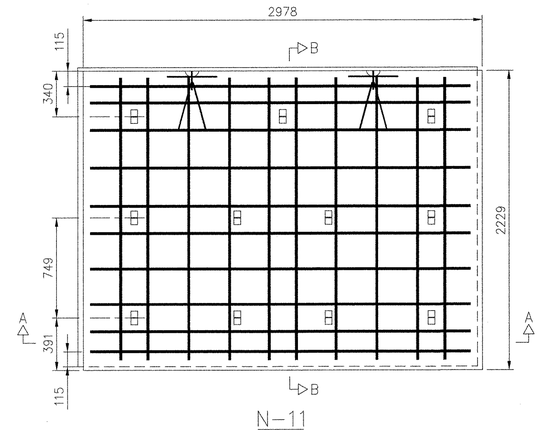

N-11

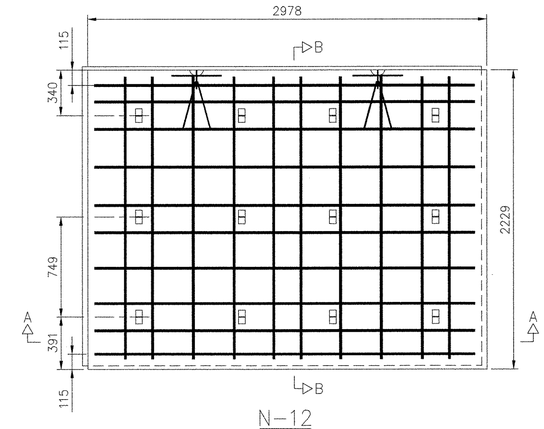

N-12

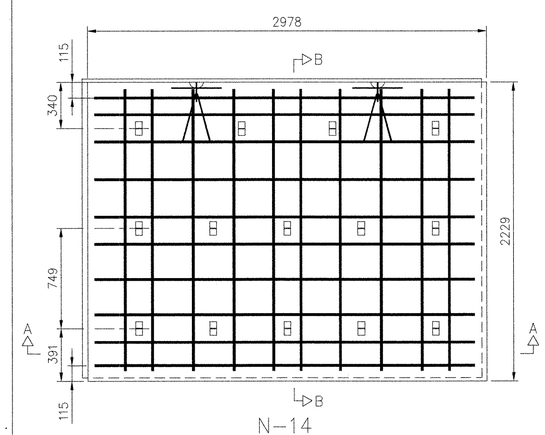

N-14

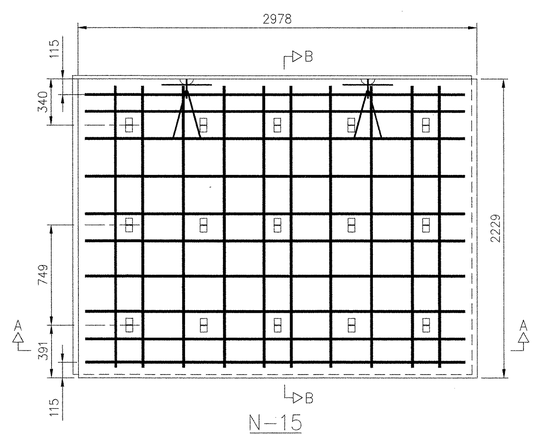

N-15

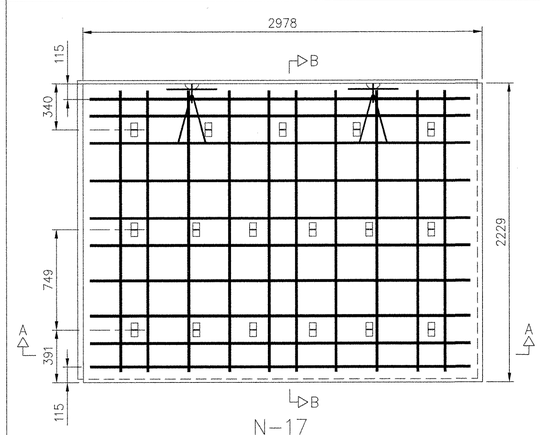

N-17

DEC 13 2004

PADOT DRAWING #04-601 BQAD

DIMENSIONS ARE APPROXIMATE DUE TO CONVERSION FROM ENGLISH DIMENSIONING

REV.	DATE	DESCRIPTION
1	12/3/04	REV. PER PDOT COMMENTS (11/29/04)

The Reinforced Earth Company
8614 Westwood Center Drive Suite 1100, Vienna, Virginia 22182 (703) 821-1175

"REINFORCED EARTH" is the registered trademark of The Reinforced Earth Company.

PENNA. DEPARTMENT OF TRANSPORTATION
PRECAST CONCRETE WALL PANELS
COUNTY
S.R. _____ SECTION _____
SEG _____ OFFSET _____
CONTRACTOR: REINFORCED EARTH RETAINING WALLS
MANUFACTURER:
THE REINFORCED EARTH CO.
VIENNA, VA.

PRECAST PANEL SHOP DRAWINGS

DRAWN BY: PHL	DATE: 8/31/04	REVISED:	SHEET
CHECKED BY: ER	DATE: 8/31/04		S14M OF S15M
REFERENCE DRAWING:			

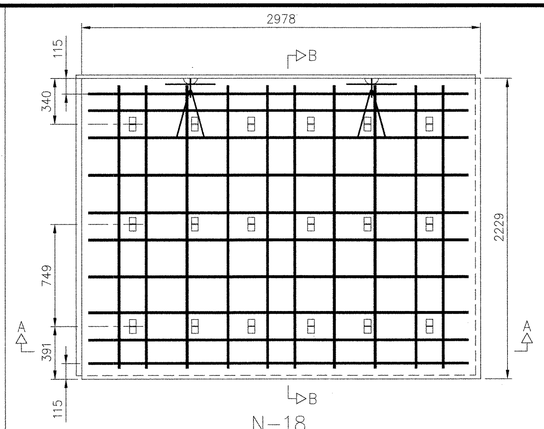

N-18

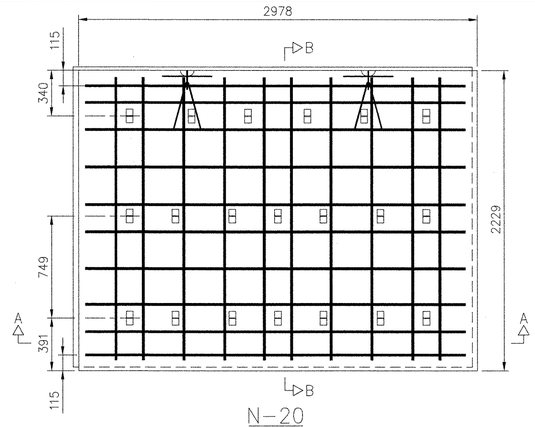

N-20

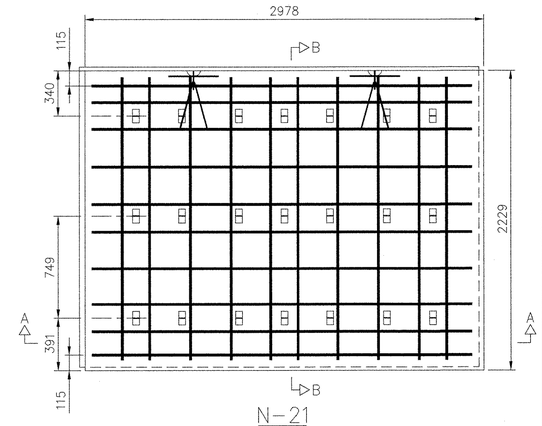

N-21

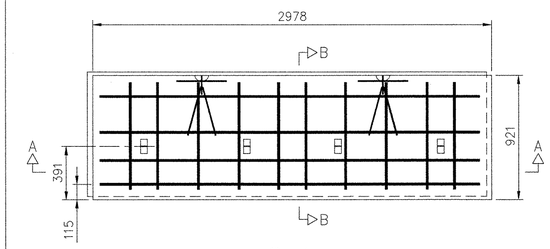

S-4

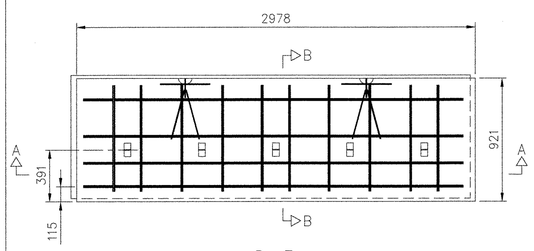

S-5

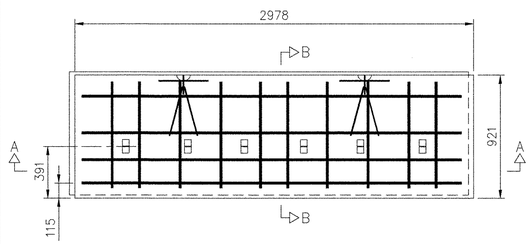

S-6

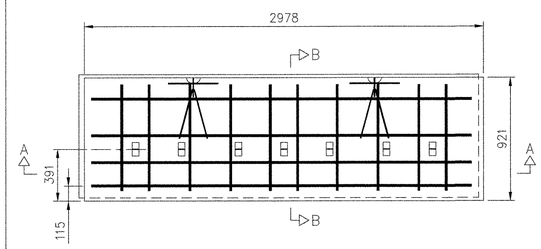

S-7

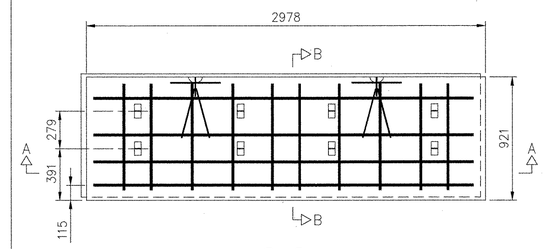

S-8

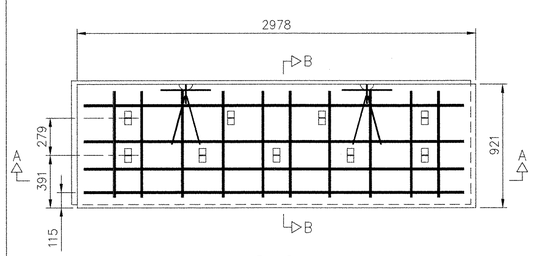

S-9

DEC 13 2004

PA DOT DRAWING #04-601 BQAD

DIMENSIONS ARE APPROXIMATE DUE TO CONVERSION FROM ENGLISH DIMENSIONING

PENNA. DEPARTMENT OF TRANSPORTATION
PRECAST CONCRETE WALL PANELS

COUNTY
S.R. _____ SECTION _____
SEG _____ OFFSET _____

CONTRACTOR: REINFORCED EARTH RETAINING WALLS

MANUFACTURER:

THE REINFORCED EARTH CO.
VIENNA, VA.

REV.	DATE	DESCRIPTION
1	12/3/04	REV. PER PDOT COMMENTS (11/29/04)

The Reinforced Earth Company
8614 Westwood Center Drive Suite 1100, Vienna, Virginia 22182 (703) 821-1175

"REINFORCED EARTH" is the registered trademark of The Reinforced Earth Company.

PRECAST PANEL SHOP DRAWINGS

DRAWN BY: PHL	DATE: 8/31/04	REVISED:	SHEET
CHECKED BY: JES	DATE: 8/31/04		S15M OF S15M
REFERENCE DRAWING:			

Product:

FADDIS Concrete Products
Temporary Concrete Barrier Structure Mounted
Shop Drawings
PENNDOT Dwg 05-601-BQAD

Approval Date:	**Initiated By SOL:**
July 22, 2005	Not Applicable

Application/Use:

Preapproved shop drawings for the manufacture of temporary concrete barriers in accordance with PENNDOT Standard Drawing BC-719M, Temporary Concrete Barrier Structure Mounted by FADDIS Concrete Products of Downington, PA 19335.

Specifications:

None.

Standard Drawings:

Temporary Concrete Barrier Structure Mounted
Shop Drawings
PENNDOT Drawing 05-601-BQAD (dated August 1, 2005).
These drawings can be used as Standard approved shop drawings for your shop drawing approval.

Comment:

FHWA approval has been secured.

NOTES:
1. ALL DIMENSIONS ARE IN INCHES [MILLIMETERS]
2. PROVIDE CONCRETE BARRIER MEETING THE REQUIREMENTS OF PUBLICATION 408M, SECTIONS 627, CONTRACT DWGS, BC-719M AND SPECIAL PROVISIONS.
3. ROUND ALL EDGES WITH A RADIUS OF 1 [24] EXCEPT AS SHOWN.
4. PROVIDE PLATES 1/2 [13] x 12 [305] x 27 [686] MEETING THE REQUIREMENTS OF PUBLICATION 408M, SECTION I105.02(s).
5. CONCRETE CLASS AAA
6. REINFORCED STEEL SHALL MEET THE REQUIRMENTS OF ASTM A615M GRADE 420 [60].
7. APPLY (2) COATES OF BOILED LINSEED OIL IN ACCORDANCE WITH PADOT PUB. 408/2000.
8. ANCHOR BOLT DETAILS TO BE SUPPLIED BY OTHERS.

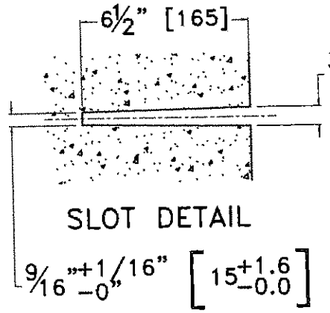

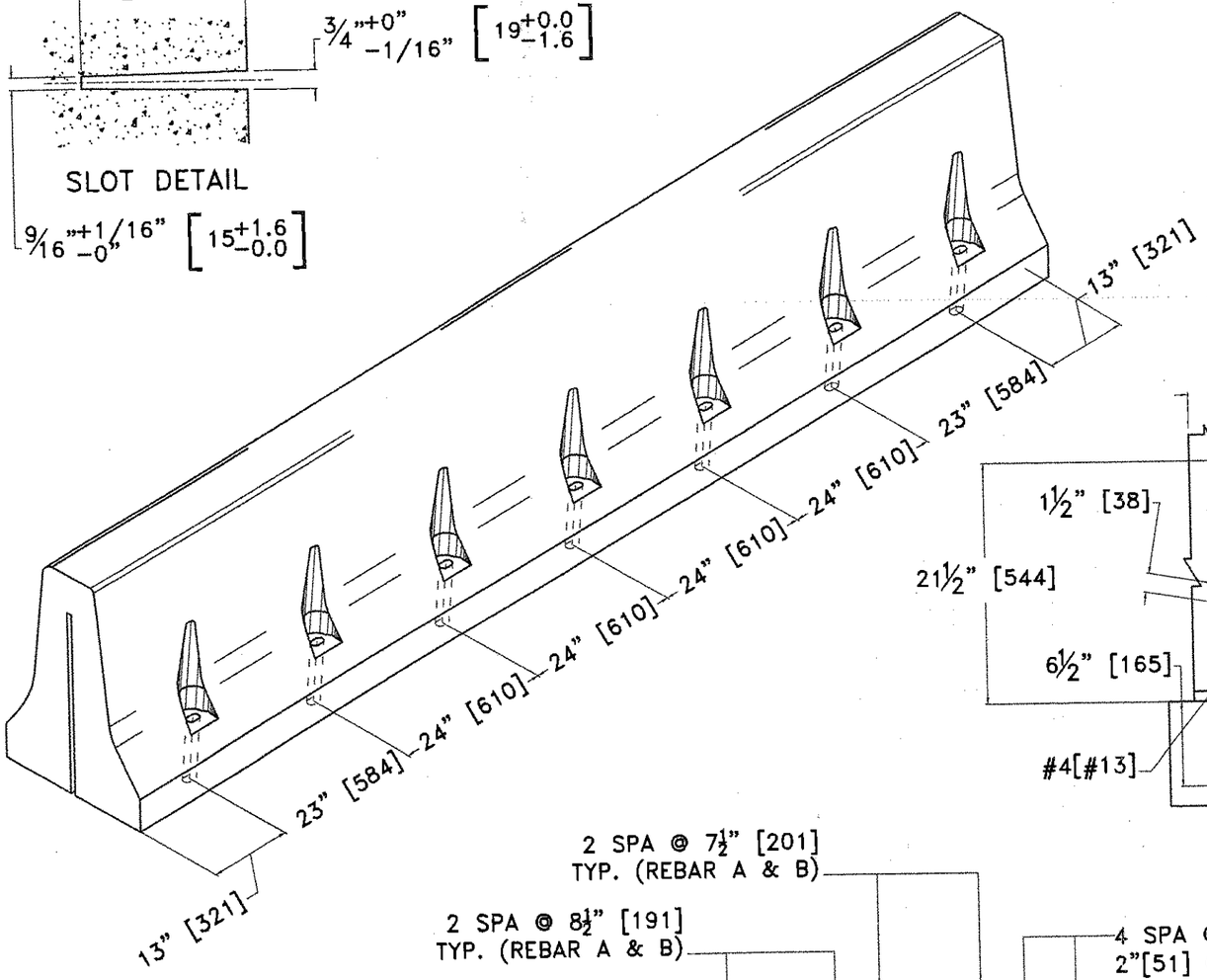

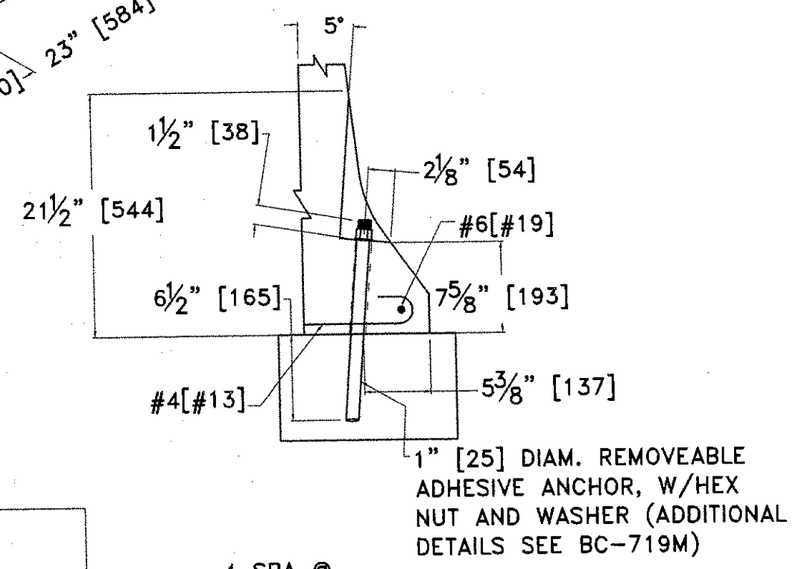

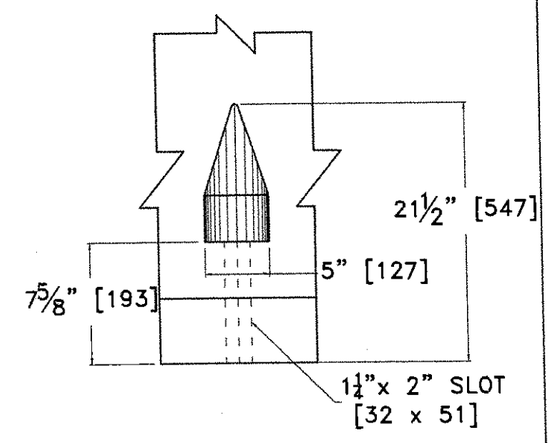

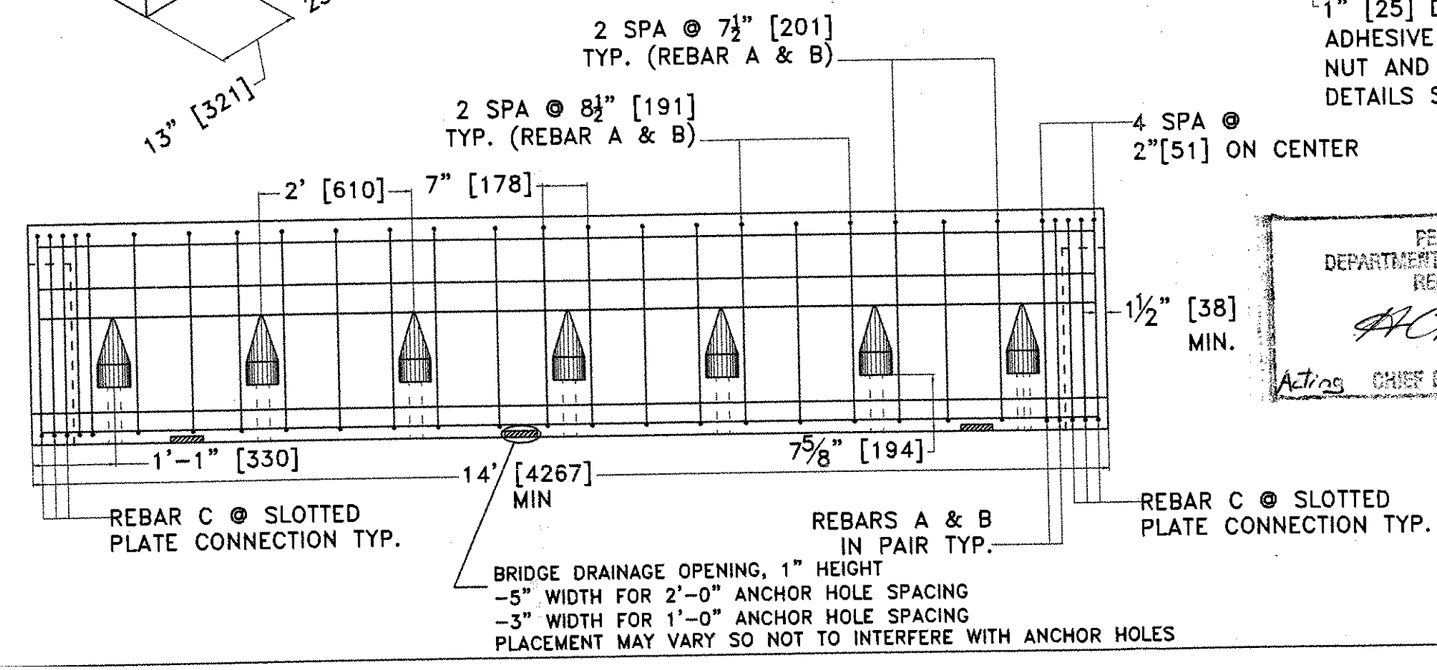

PENNSYLVANIA DEPARTMENT OF TRANSPORTATION RECOMMENDED
A.C. Rogers Jr. P.E.
Acting CHIEF BRIDGE ENGINEER
AUG 01 2005

BC 719M	
PENNDOT DRAWING 05-601-BQAD	

Commonwealth of Pennsylvania	FADDIS CONCRETE PRODUCTS 3515 KINGS HIGHWAY DOWNINGTON, PA. 19335			
Department of Transportation	32" [810] TEMPORARY CONCRETE BARRIER STRUCTURE MOUNT			
DATE 6/22/05	DR.BY TWC	SCALE N.T.S.	JOB NO.	DWG. No. B-0093-A.2
CLIENT:			JOB:	

CYW 7/7/05 AR 7/7/05

NOTES:
1. ALL DIMENSIONS ARE IN INCHES [MILLIMETERS]
2. PROVIDE CONCRETE BARRIER MEETING THE REQUIREMENTS OF PUBLICATION 408M, SECTIONS 627, CONTRACT DWGS, BC-719M AND SPECIAL PROVISIONS.
3. ROUND ALL EDGES WITH A RADIUS OF 1 [24] EXCEPT AS SHOWN.
4. PROVIDE PLATES 1/2 [13] x 12 [305] x 27 [685] MEETING THE REQUIREMENTS OF PUBLICATION 408M, SECTION 1105.02(s).
5. CONCRETE STRENGTH, CLASS AAA 31.5 MPa [4500 PSI] - 28 DAYS.
6. REINFORCED STEEL SHALL MEET THE REQUIRMENTS OF ASTM A615M GRADE 420 [60].
7. APPLY (2) COATES OF BOILED LINSEED OIL IN ACCORDANCE WITH PADOT PUB. 408/2000.
8. ANCHOR BOLT DETAILS TO BE SUPPLIED BY OTHERS.

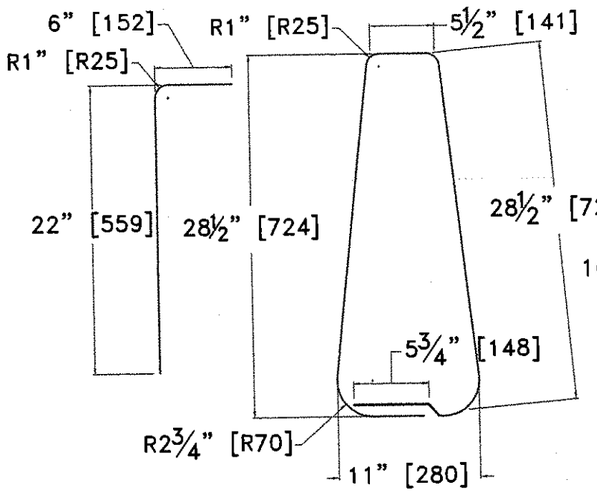

TRANSITION BAR
#4(#13)

REBAR A
#4(#13)

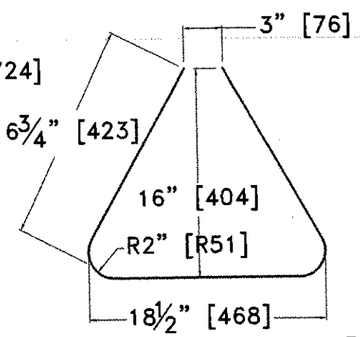

REBAR B
#4(#13)

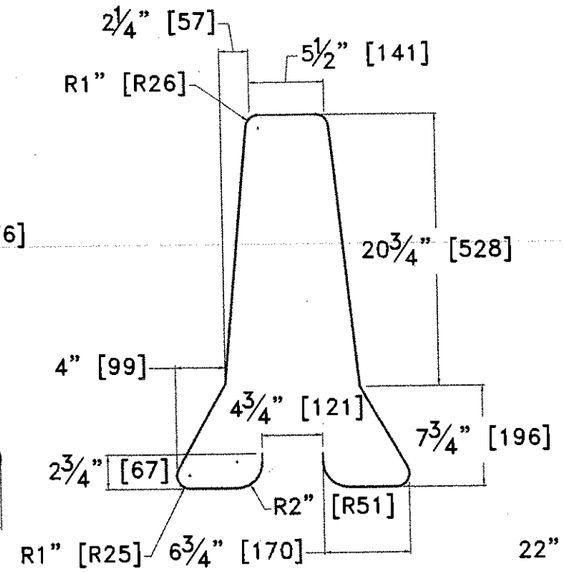

REBAR C
#4(#13)

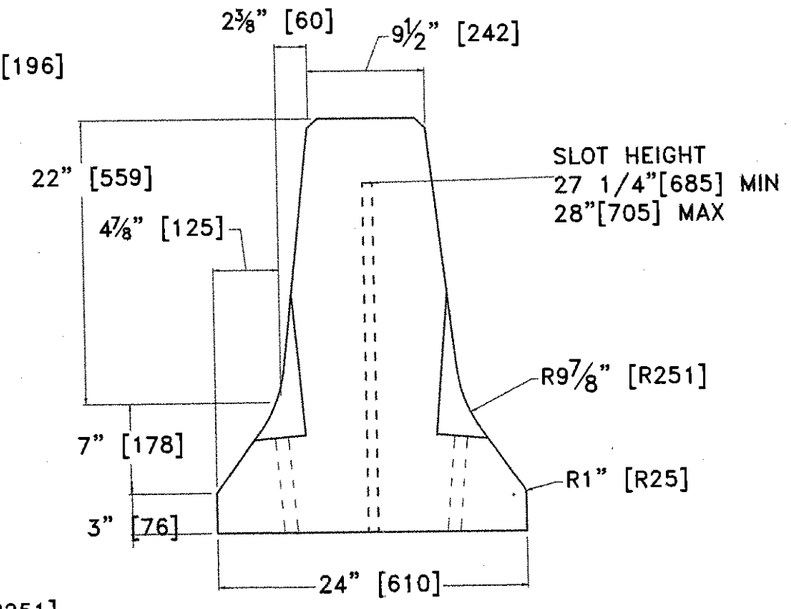

SECTION VIEW

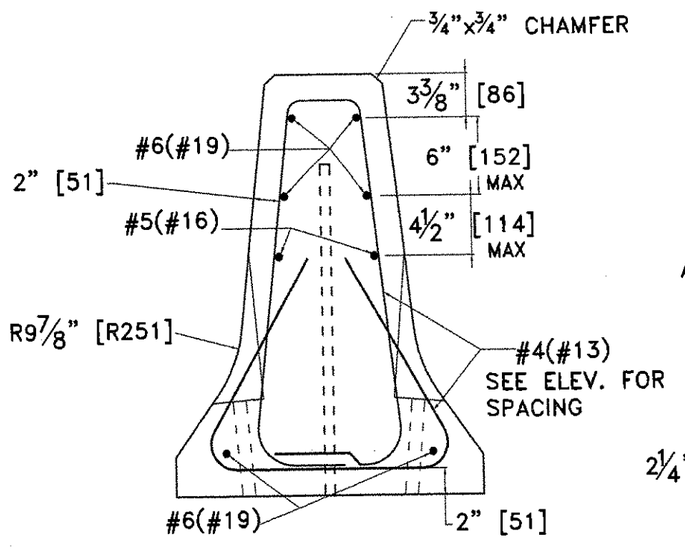

SECTION VIEW
TYPICAL

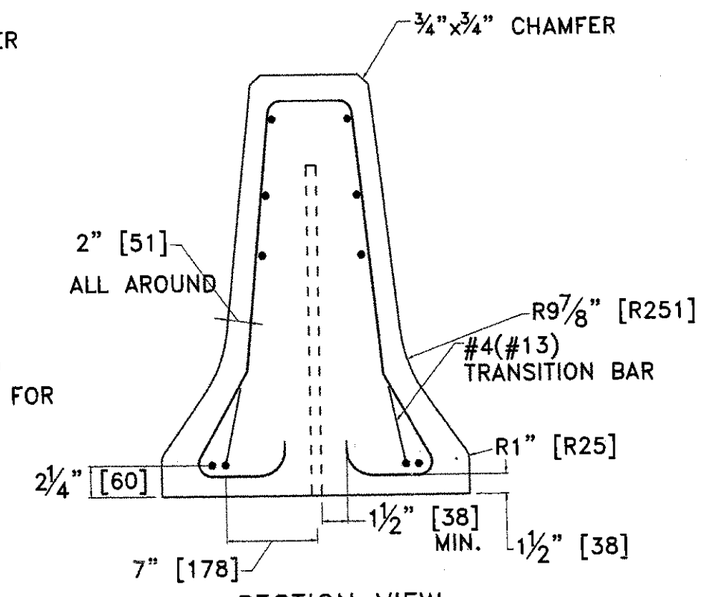

SECTION VIEW
ALT. SLOT CONNECTION

AUG 01 2005

BC 719M		
PENNDOT DRAWING 05-601-BQAD		

Commonwealth of Pennsylvania	FADDIS CONCRETE PRODUCTS 3515 KINGS HIGHWAY DOWNINGTON, PA. 19335			
Department of Transportation	32" [810] TEMPORARY CONCRETE BARRIER STRUCTURE MOUNT			
DATE 6/22/05	DR.BY TWC	SCALE N.T.S.	JOB NO.	DWG. No. B-0093-B.2
CLIENT:			JOB:	

Product:

Item **9000-7003** – Everwall Abutment and Retaining Wall System – Square Foot Special Provisions and Standard Detail Drawings PADOT DWG. PE# 2002-021

Approval Date:	**Initiated by SOL**
September 30, 2005	431-05-04

Application/Use:

Everwall Abutment and Retaining Wall Systems manufactured by Schuylkill Products Inc., 121 River Street, Cressona, PA 17929-1133 (Telephone No. 570-385-2352), have been approved to be used as an "**alternate"** or "**as-designed"** to Precast Modular Retaining Wall System and/or MSE Wall System.

District Executives may permit the use of these Everwall Abutment and Retaining Wall Systems, as an "**alternate"** or **"as-designed"** on a project-by-project basis.

Specifications:

Attached is a copy of the Design/Construction Specifications specified on the Standard Detail Drawings PADOT DWG. PE# 2002-021 dated September 30, 2005 for Everwall Abutment and Retaining Wall Systems.

Standard Drawings:

Attached is a copy of the Standard Detail Drawings PADOT DWG. PE# 2002-021 dated September 30, 2005 for Everwall Abutment and Retaining Wall Systems for your use.

Comment:

On those projects permitting the use of this system as an alternate, a special provision should be included in the proposal to indicate that the "Everwall Abutment and Retaining Wall Systems" as an alternate is allowed.

The contractor will be required to revise the pertinent contract drawings as per DM-4, PP 1.10 to show the usage of "Everwall Abutment and Retaining Wall Systems" and will be required to reimburse the Department a fee of **$1000** per design for the review and approval of the revision. This should be specified in the contract's Special Provisions.

The Department's specifications, Section 107.03 of the Publication 408 is applicable on all projects for the use of Everwall Abutment and Retaining Wall Systems.

FHWA approval has been secured for Everwall Abutment and Retaining Wall Systems.

DESIGN SPECIFICATIONS FOR EVERWALL RETAINING WALL SYSTEM

1.0 General:

a. Schuylkill Product's designated design consultant to prepare the design calculations of Everwall in accordance with the guidelines specified herein and as indicated on the Standard Detail Drawings (Drawing PE 2002–021). Submit design procedures or permissible variations other than those contained herein for approval to the Bureau of Design, Bridge Quality Assurance Division, Harrisburg, Pennsylvania.

b. The Everwall Retaining Wall design consultant takes full responsibility for the engineering theory, calculations, correctness, and ensuring all design assumptions are validated in the contract documents, either by needed details or construction specifications.

c. Secure District Bridge and Geotechnical (Soils) Engineer's approval before incorporating Everwall in any project.

d. Limit Everwall Retaining Walls to wall heights as follows:

- Everwall Retaining Wall 40'–0" (13106).
- M.S.E. Everwall Retaining Wall with galvanized wire mesh anchoring system 40'–0" (12192).
- M.S.E. Everwall Retaining Wall with galvanized metal strip anchoring system 55'–0" (16764).

e. The precast concrete producer must be approved for the product of Everwall units and listed in Bulletin 15.

2.0 Design:

a. Provide at no expense to the Department four sets (three sets to District and one set to Central Office Bridge Division) of construction drawings (22"x34") (594x841), calculations, erection methods, and detailed erection calculations, erection methods, and detailed erection plans for approval. Provide approved drawings, using Department drafting standards. Show a professional engineer's seal licensed in Pennsylvania with valid signature in ink, the date signed, a business name and business address, on the first sheet of the design drawings, use mylar furnished by the Department. The District Bridge Engineer will sign the final design plans.

Include the following statement on the first sheet of the drawings above the P.E. Seal: "I hereby certify that all design assumptions have been validated either through construction details or notes on these drawings or through the contract plans and provisions.

b. On the first sheets of the computations, show a professional engineer's seal (licensed in Pennsylvania), signature and the date signed. Everwall Retaining Wall parameters, and other limitations on fill height are as per manufacturer's standard drawings.

c. In the event that certain design parameters, stresses or specifications are in conflict, the following order of performance governs:

1. Design requirements listed in "Special Drawings and Special Design Requirements" (Part B) of the special provision.
2. Design related strike–off letters in effect on the date of project advertisement. Refer to list in Part B.
3. PDT – Design Manual Part 4, (April, 2000 Edition). (Structures).
4. PDT – Design Standards.
5. AASHTO Standard LRFD Bridge Design Specifications (1998 Second Edition and approved Interim Specifications).

d. In the event that a clear order of predominance cannot be established or a difference in the interpretation of the design cannot be solved, the Chief Bridge Engineer will arbitrate and make a final decision.

e. Comply with the design criteria in Design Manual Part 4 (April, 2000 Edition) Structures, the AASHTO LRFD Bridge Design Specifications, (1998 2nd Edition) for Highway Bridges, with an exception of the determination of minimum length of soil stabilizing elements for MSE Abutment and Retaining wall with Everwall Units, and as specified, subject to exception and/or additions under "SPECIAL DRAWINGS AND SPECIAL DESIGN REQUIREMENTS" (Part B).

Comply with 2002 LRFD AASHTO Interim Specifications for the determination of minimum length of soil stabilizing elements for M.S.E. Abutments and Retaining Walls with Everwall Units.

f. Bearing capacity and overall stability: Consider every Everwall module, 10' x unit depth, acts as rigid body in the determination of bearing capacity and overall stability with the following resistance factor.

- Bearing Capacity: 0.45 (Soil); 0.55 (Rock)
- Sliding: 0.8 (Gravity Type Unit for Abutment Construction)
  0.9 (Gravity Type Unit for Wingwall and Retaining Wall)
  1.0 (M.S.E. Wall)
- Overall Stability: 0.85 (strength limit state)
  0.65 (service limit state)

g. Do not change bottom of Everwall Foundation Unit elevation unless authorized by the District Bridge Engineer/ District Geotechnical (Soils) Engineer.

h. Based on the field condition, provide a 6" (152) diameter foundation drain into the two–foot (610) minimum width of select backfill, wrap with Geotextile Fabric, Class 1, behind the wall to improve drainage conditions. Direct seepage from foundation drain to storm water conveyances or provide 4"(102) diameter weep hole at every Everwall Unit with a two–foot by two–foot (610) No. 57 Coarse Aggregate wrapped with Geotextile Class 2, Type A (Pub 408, Section 735).

i. Place bottom of Everwall Foundation Unit at a minimum depth equal to prevailing frost depth but no less than 3 feet (915) below the finished ground elevation and place Everwall Foundation Unit on a minimum depth of 12" (305) compacted No. 57 course aggregate material with a minimum of 12 inches (250) wider at each side of the bottom of Everwall Unit.

j. Place Everwall Foundation Units on a Class A Cement Concrete footing if Everwall units are to be used for the construction of abutments.

k. Provide a single faced concrete barrier in front of the wall for traffic protection if required.

l. Provide the following material for precast concrete wall:

- Minimum 28 day strength of concrete, f'c, 5,000 psi (34.5 MPa).
- Chamfer all exposed edges 1" x 1" (25x25) except as noted.
- Reinforcement Bars:
  Grade 60 reinforcing steel bars that meet the requirements of deformed billet – steel bars (ASTM A615), or low alloy deformed bars (A706). Do not weld Grade 60 reinforcing steel bars unless specified. Grade 40 reinforcing steel bars may be substituted with a proportional increase in cross sectional area.
- Steel Welded Wire Fabric:
  AASHTO M55 (ASTM 185)
  (a) Epoxy Coating (when indicated), ASTM A884/A884M, Type 1, Class A.

m. Modify the top unit of Everwall by the following options if required to match the finished ground surface:

- Extend front face panel of backwall unit for the height varying from 0' to 3'–6" (1066).
- Saw cut standard Everwall Unit by boxing out the vertical panels and front face panels of Everwall unit in the mold to cast triangular faced precast unit, or cast 2' (600) high or 3' (900) high Everwall Unit with front faced panel extension with height varying from 0' to 3'–6" (1066) maximum.

All dimensions for metric unit are in millimeter unless otherwise noted. Metric units are in parentheses. Either all metric or all English values must be used on plans. Metric and English values shown may not be mixed.

PENNSYLVANIA DEPARTMENT OF TRANSPORTATION RECOMMENDED
ACTING CHIEF BRIDGE ENGINEER
9/30/05

INDEX OF DRAWINGS

1.	DESIGN SPECIFICATIONS
2.	CONSTRUCTION SPECIFICATIONS – SHT. 1 OF 3
3.	CONSTRUCTION SPECIFICATIONS – SHT. 2 OF 3
4.	CONSTRUCTION SPECIFICATIONS – SHT. 3 OF 3
5.	SAMPLE EVERWALL ABUTMENT AND TYPICAL ABUTMENT SECTION
6.	SAMPLE EVERWALL ABUTMENT DETAILS AND WING CROSS SECTION
7.	SAMPLE EVERWALL RETAINING WALLS
8.	SAMPLE M.S.E. ABUTMENT WITH EVERWALL UNITS AND TYPICAL ABUTMENT CROSS SECTION
9.	SAMPLE M.S.E. RETAINING WALLS WITH EVERWALL UNITS
10.	REINFORCING MESH ANCHORING DETAILS FOR M.S.E. WALLS WITH EVERWALL UNITS
11.	REINFORCING STRIP ANCHORING DETAILS FOR M.S.E. WALLS WITH EVERWALL UNITS
12.	EVERWALL UNIT DESIGN INFORMATION FOR USE OF EVERWALL UNITS ONLY
13.	EVERWALL UNIT DIMENSIONS – SHEET 1 OF 2
14.	EVERWALL UNIT DIMENSIONS – SHEET 2 OF 2
15.	CORNER DETAILS – SHEET 1 OF 2
16.	CORNER DETAILS – SHEET 2 OF 2
17.	REINFORCEMENT DETAILS FOR EVERWALL UNIT TYPES 4F AND 4S
18.	REINFORCEMENT DETAILS FOR EVERWALL UNIT TYPES 4FM AND 4SM
19.	REINFORCEMENT DETAILS FOR EVERWALL UNIT TYPES 6F AND 6S
20.	REINFORCEMENT DETAILS FOR EVERWALL UNIT TYPES 8F AND 8S
21.	REINFORCEMENT DETAILS FOR EVERWALL UNIT TYPES 10F AND 10S
22.	REINFORCEMENT DETAILS FOR EVERWALL UNIT TYPES 12F AND 12S
23.	REINFORCEMENT DETAILS FOR EVERWALL UNIT TYPES 14F AND 14S
24.	REINFORCEMENT DETAILS FOR EVERWALL UNIT TYPES 16F AND 16S
25.	REINFORCEMENT DETAILS FOR EVERWALL UNIT TYPES 4F – 16F, SPECIAL

SEP 30 2005

COMMONWEALTH OF PENNSYLVANIA
REGISTERED PROFESSIONAL
LIN CHEN
ENGINEER
No. 14128E

PREPARED BY:
EVERWALL RETAINING WALL SYSTEMS, INC.
SCHUYLKILL PRODUCTS, INC.
121A RIVER STREET
CRESSONA, PA 17929

ENGINEER

6/10/05
DATE

"I HEREBY CERTIFY THAT ALL DESIGN ASSUMPTIONS HAVE BEEN VALIDATED EITHER THROUGH CONSTRUCTION DETAILS OR THROUGH THE CONTRACT PLANS AND PROVISIONS."

COMMONWEALTH OF PENNSYLVANIA
DEPARTMENT OF TRANSPORTATION

EVERWALL ABUTMENT AND RETAINING WALL SYSTEM
STANDARD DRAWINGS

DESIGN SPECIFICATIONS

PADOT DWG # PE# 2002–021

SHEET 1 of 25

9/30/05

File: sheet1.dwg Date/Time: June 10, 2005 11:16 a.m. Scale: 1=1 kriegel Xrefs:

CONSTRUCTION SPECIFICATIONS FOR EVERWALL RETAINING WALL SYSTEMS

I. DESCRIPTION

This work is the designing, furnishing, and erecting of Everwall Systems used as retaining walls and abutments.

These systems, some of which are propriety, consist of precast concrete units erected to form a gravity retaining walls and abutments.

II. MATERIAL

(a) Provide materials and workmanship in accordance with Publication 408, and as specified herein.

(b) Everwall Units. Furnish precast wall units in accordance with Section 714, except provide concrete for precast wall units having a 28-day minimum compressive strength of 5,000 psi (34.5 MPa) when tested in accordance with PTM No. 604.

Place reinforcement and handling devices, to the dimensions and tolerances indicated or as approved by the Engineer, prior to casting.

1. Testing and Inspection. Acceptability of the precast wall units will be determined on the basis of entrained air content testing of the concrete mixture, compressive strength testing, and visual inspection. Furnish facilities for the Department to perform all necessary sampling and testing in an expeditious and satisfactory manner. Acceptance will be as herein specified.

   Acceptance of Everwall units with respect to compressive strength will be based on the results of production lot testing. A production lot is defined as the wall units represented by one day's production. Four cylinders per lot will be selected in accordance with PTM No. 601. Cylinder specimens will be cured with the product and tested in accordance with PTM No. 611. Acceptance will be based on compliance with the requirements of Sections 714.4(b) and 714.7(a), except the lot compressive strength will be determined as the average of the compressive strength testing of 2 cylinders and no individual test result may be below 4400 psi (30.0 MPa).

   Acceptance with respect to visual inspection will be based on compliance with the requirements of Section 713.2(d). In addition, precast wall units may be rejected for color or texture variations of the front face due to excess form oil or other causes.

   Completed Everwall units will be inspected before shipment to verify dimensions, finish requirements and other requirements. Minor damage due to form removal and handling may be repaired in accordance with Publication 145 'Repair procedures for Precast Concrete Products' Unsatisfactory units will be rejected.

   Repairs and repair procedures require the approval of the Engineer. Mark rejected precast units with the words "Rejected for Department Use" using waterproof paint.

2. Forms. Construct forms of steel in a manner that assures the production of uniform units, and leave forms in place until they can be removed without damage to the unit.

   Replace damaged forms or forms having a deteriorated surface.

3. Mixing and Placing Concrete. Mix and deliver concrete as specified in Section 704. For transporting, placement, and consolidation of concrete, use methods that will prevent segregation of concrete materials and displacement of steel reinforcement from its proper position in the form. Do not place concrete when ambient temperature are below 40 degrees Fahrenheit (5 degrees Celsius) or above 100 degrees Fahrenheit (38 degrees Celsius). Do not use admixtures containing chlorides.

4. Casting. Carefully place concrete in the forms and vibrate sufficiently to produce a surface free from imperfections such as honeycombing, segregation, or cracking. Use clear form oil from the same manufacturer throughout the casting operation.

5. Finish. Provide a conventional surface finish unless otherwise indicated. When a special or decorative surface finish is required, display for approval a typical sample of the precast unit, showing the color, texture, and finish intended to be used prior to standard production of units.

6. Curing. Cure units in accordance with Section 714 and the approved QC plan for the period of time required for the concrete to obtain the specified minimum compressive strength. Control curing until a compressive strength of 4,000 psi (27.0 MPa), 80% fc', is achieved.

7. Tolerance. Manufacture all units within the following tolerances:
   - General dimensions, position of lifting devices within 1 inch (25); all other dimensions within $^1/_4$ inch (5).
   - Unit dimensions: Not to exceed $^1/_2$ inch (13) as determined by length and transverse width near the legs.
   - Unit surface finish: Not to exceed $^1/_8$ inch (3) on smooth formed surface measured over a length of 10 feet (3050).
   - Location of reinforcement steel: Cover tolerance; Minimum $^1/_4$ to + $^1/_2$ inch (6 to 13). Otherwise within plus or minus $^1/_2$ inch (13).
   - ACI 117. (Others not specified).

8. Marking. Clearly scribed or paint with waterproof paint on the interior surface of each unit the date of manufacture, lot production number, piece mark, and QC inspection date, and stamp.

9. Handling, Storing, and Shipping. Handle, store, and ship all units in such a manner as to eliminate the danger of chipping, cracking, fracture, and excessive handling stress.

   Do not ship units until the 28-day minimum compressive strength is attained. Provide 24-hour advance notice of loading and shipping schedule.

   Repair or replace any unit damaged during handling, transporting, erecting or backfilling, or any unit that cannot be placed satisfactorily in the wall, Submit procedures to the Engineer for approval prior to completing any repairs.

(c) Cement Concrete: Section 704. Use Class AA Cement Concrete for single face barrier, backwall, checkwalls, coping, curbs, parapet barriers, and moment slab, and Class A Cement Concrete for cast-in-place footing, beam pedestals and abutment cap beams, if required.

(d) Reinforcement Bars. Grade 60, Section 709.1(a)1., except No. 3 (No. 10) stirrup bars may be Grade 40. Provide epoxy coated reinforcement bars, as specified in Section 709.1(c), for cast-in-place or precast single face concrete barrier, and precast wall unit, if indicated or specified.

(e) Steel Welded Wire Fabric – Section 709.3.

(f) Joint Filler.
   - For Expansion Joint Material – Section 705.1
   - For Horizontal Joints:

     Provide a thin quick set mortar meeting the requirements of Section 1001.2(d) on the full contact surface of precast concrete units and the footing, if required, where the Everwall Foundation Units are placed.
   - For joints under the first unit.

     Provide a joint filler consisting of 1/3 sand, 1/3 cement and 1/3 water and accelerator. Mix a 'dry pack' or rather stiff consistency.

(g) Granular Fill Material for Everwall Unit.

Provide the granular fill material to meet the following requirements Gradation limits as determined by AASHTO-T27:

Sieve size:	Percent passing:
5 inches (130)	100%
No. 200 (75 μ m)	10-25%

Granular Fill Material for M.S.E. wall with Everwall units

Sieve size:	Percent passing:
3 inches (75)	100%
3/4 inches (19)	20-100%
No. 40 (450 μm)	0-60%
No. 200 (75 μm)	0-5%

Have the backfill conform to all of the following additional requirements:

1. Furnish materials containing less than 2% deleterious shale as determined by PTM No. 519. Do not use metallurgical slag or cinders.

2. Furnish material exhibiting an angle of internal friction of not less than 34 degrees as determined, in accordance with AASHTO-T236, on the portion finer than the 2.0mm (#10) seive compacted to 95% of AASHTO-T99, Method C or D (with oversize correction as outlined), at optimum moisture content, except for coarse aggregate meeting the requirements of Section 703.2.

   Direct shear testing may be preformed on samples containing material larger than the 2.0mm (#10) sieve, if the shear device conforms with AASHTO-T236, Sections 5.4 and 5.5.

3. Provide materials meeting the following electrochemical criteria:

Test	Criterion
pH, Cal. DOT 643*	6 – 10
Resistivity, Cal. PTM 133	
o > 5000 ohm-centimeters- No claride or sulfate testing required.	
o 2000 – 5000 ohm-centimeters- Perform the specified chloride and sulfate tests.	
Chlorides, Cal. DOT 422*	< 100 parts per million (ppm)
Sulfates, Cal. DOT 417*	< 200 parts per million (ppm)

* Available for review at the District Office or the Bureau of Construction and Materials, Materials and Testing Division.

Provide randomly selected backfill samples for testing, as directed by the Engineer. Obtain approval for backfill material, prior to use.

SEP 30 2005

COMMONWEALTH OF PENNSYLVANIA
DEPARTMENT OF TRANSPORTATION

EVERWALL ABUTMENT AND RETAINING WALL SYSTEM
STANDARD DRAWINGS

CONSTRUCTION SPECIFICATIONS – SHT. 1 OF 3

PADOT DWG # PE# 2002-021

File: SHEET2.dwg Date/Time: June 10, 2005 11:11 a.m. Scale: 1=1 kriegel Xrefs:

(h) Selected Borrow Excavation – Structure Backfill as shown on the Standard Drawings RC 12–M. Minimum friction angle is 30°.

(i) Structural Foundation Drains – Section 610.2(a).

(j) Geotextiles. Class 1 and Class 2, Section 735.

(k) Aggregate.
Coarse Aggregate No. 5 – Section 703.2.
Coarse Aggregate No. 57 – Section 703.2.
Coarse Aggregate No. 2RC – Section 703.3.

(l) Styrofoam – ASTM C578, Type I, except limit the water absorption to 2% by volume.

(m) Waterproofing – Section 680.

(n) Close–Cell Neoprene sponge – Section 1107.02 (n) 1.

(o) For Corner Connection
Expansion Bolts – Section 1017.2(h)
Carbon Steel Bent Plate – Section 1105.02(a)
Galvanizing – Section 1105.02(s)

(p) For M.S.E. Wall Construction

Reinforcing Mesh, Galvanized – ASTM A82, A185 and Section 1105.02(s)

Provide wire size and mesh configuration as indicated. Carefully inspect all mesh reinforcement and attachment devices to ensure they are true to size and free from any defects that may impair their strength and durability. Cutting of steel mesh or grids at pile locations, vertical obstacles, or utilities is not acceptable.

Care must be taken to avoid bending or damage to the galvanized coating on reinforcing mesh of grids during handling, storing, and shipping.

Clevis Loop, Galvanized – ASTM A82, A185 and Section 1105.02(s)

Connector Bar, Galvanized – ASTM A82, Section 1105.02(s)

Reinforcing Strips Galvanized – ASTM A572, Grade 65 and Section 1105.02(s)

Hot dip galvanize reinforcing strips and tie strips, after fabrication. Cut to length within the tolerances indicated on approved shop drawings. Punch holes for bolts, in the location shown before galvanizing. Carefully inspect all reinforcing and tie strips to ensure they are true to size and free from defects that may impair their strength and durability. Cutting of reinforcing strips at pile locations, vertical obstacles, or utilities is not acceptable.

Care must be taken to avoid bending or damage to the galvanized coating on reinforcing mesh of grids during handling, storing, and shipping.

Everwall Tie Strips Galvanized ASTM A570, Grade 50 and Section 1105.02(s)

H.S. Bolt, Mechanically Galvanized, Section 1105.02(d) and Section 1105.02(s)

III. CONSTRUCTION

(a) Shop Drawings. Prior to fabrication, submit and obtain approval for shop drawings. Show complete fabrication details and dimensions, as well as handling, transportation, and construction procedures for all Everwall units.

(b) Excavation and Foundations. Grade the structure foundation level, or to the indicated slope, for the width required or as indicated in accordance with Section 203. Prior to wall construction, except where constructed in rock, compact the foundation with a smooth wheel vibratory roller. Remove any foundation soils found to be unsuitable and replace with granular material 2RC as directed. Excavate, in accordance with Section 204, to the limits and construction stages indicated.

Do not begin wall erection until the foundation has been approved.

Construct the concrete leveling pad or footing or No. 57 coarse aggregate leveling pad as indicated and specified in applicable portions of Section 1001.3, to the dimensions and details indicated and within the right–of–way, prior to placement of precast wall units. Construct in conformance with the grades and cross slopes indicated.

Place the bottom of the footing or the bottom of Everwall Foundation Unit at a minimum depth equal to prevailing frost depth but not less than 3 feet (915) below finished ground elevation, unless otherwise indicated.

(c) Wall Erection.

1. Install Everwall units as shown on the approved shop drawings and in compliance with the lines and grades as indicated. Erection of the units typically should begin at the lowest elevation and proceed laterally along the wall length. Where a wall meets a fixed structure or a critical location such as a bend point, erection should begin at that point, provided the site configuration is suitable. Set Everwall units of the front faces in line with the plan layout of the structure. For Vertical Walls set the front faces of walls in vertically. For battered walls, set Everwall units at the batter rate of the structure. Adjust first level of units with small wedge shims, made of a biodegradable material, using an engineers level to set front level and legs at slant far proper wall batter within $^{1}/_{8}$–inch (3) tolerance. Push 'dry' fast set mortar under the legs to ensure proper and extended contact surface area or use ample amount of fast set mortar. Gauge vertical joint width with a flat steel bar whose width is equal to the desired joint width. Take special care to set the bottom course of Everwall unit to true line and grade.

2. Install foundation drain behind the wall as indicated or as shown on the approved shop drawings.

3. Special Handling of Units

- Use long suspension gear with minimum angle of 1:1 = 45 degrees or steeper.
- Use special gear with 4 point equal suspension for stripping element from mold, never 2 or 3 points only.
- Use 4 point suspension for any later handling or hang units at transverse beams.
- Prepare three point stockpile pads in yard and on site to avoid twist.

4. Erection of Everwall Units:

- Use hand tools for pushing joint filler under the bearing surfaces of the first Everwall unit including the front leg after careful shimming of the first Everwall unit to proper elevation and exact wall batter.
- Place other levels of Everwall units on a thin quick set mortar on the full contact surface. Use connecting shear blocks, except for three(3) top rows and except Everwall Units cast face down, i.e. with steel formed contact surfaces.
- Use geotextile, Class 2, Type A, to bridge the joints between the Everwall Units at the front face of units to prevent erosion.
- Cover all joints between panels, on the back side of the wall, with the geotextile fabric. Apply adhesive to panels only. Do not apply adhesive to geotextile fabric or within 2 inches (50mm) of a joint. Provide geotextile fabric having a minimum width of 12 inches (300mm), and overlap fabric a minimum of 4 inches (100mm).

5. Corners:

- Where walls join at an angle, produce special pieces of modified units or use corner inserts of precast units or cast in place concrete units to provide neatly joined corners. If corners are foreseen the project, start erection at the corner and proceed away from it, wherever possible.

6. Curved Walls

- Where a wall is curved in plan view to a radius of less than 100 feet, provide special elements or produce special pieces where necessary to ensure that the gap between two elements does not exceed 1 inch (25mm) or additional joint parts are to be added to bridge the gap (thin pieces of non–corrosive material).

SEP 30 2005

COMMONWEALTH OF PENNSYLVANIA
DEPARTMENT OF TRANSPORTATION

EVERWALL ABUTMENT AND RETAINING WALL SYSTEM
STANDARD DRAWINGS

CONSTRUCTION SPECIFICATIONS– SHT. 2 OF 3

PADOT DWG # PE# 2002–021

SHEET 3 of 25

File: sheet3.dwg Date/Time: June 10, 2005 11:10 a.m. Scale: 1=1 kriegel Xrefs:

(c) Wall Erection. (cont.)

7. Stub Abutment on Piles. If stub abutment supported on piles is indicated, construct stub abutment support system, during placement of MSE wall backfill, as follows:

- Drive all piles prior to MSE wall installation.
- Encase each pile in a Smooth Wall or Corrugated Galvanized Steel (SWCGS) pipe of sufficient thickness to prevent buckling or distortion during placement and compaction of wall backfill.
- Place spacers between the pile and the SWCGS pipe to prevent the pipe from coming in contact with the pile during backfilling of the wall.
- Extend SWCGS pipe from the bottom of MSE wall backfill to the bottom of the bridge stub abutment footer.
- After positioning, seal the top of the SWCGS pipe to prevent debris accumulation during placement of wall backfill, and keep the pipe sealed until filed with Type A fine aggregate.
- Fill the SWCGS pipe loosely with Type A fine aggregate either before or after completion of MSE wall construction and as directed and approved by the Engineer.

(d) Backfilling

1. Compact the backfill material inside of units and within a zone of 4 feet (1200) to a minimum of 90% and a maximum of 95% dry density as determined by ASTM Test D1557. The minimum unit weight is 115 pcf. Do not over compact to avoid damage to units. Fill and compact each unit with specified backfill material in two equal lifts of each successive course of precast wall units. Do not overfill Everwall Units.

2. Place structure backfill material behind the wall within the limits shown on the Standard Drawings, as indicated or directed, in accordance with the requirements or Section 1001.3(q)2b, except the 10-day waiting period is not required. Limit the placement of the structure backfill in maximum 8-inch (200) thick lifts and compact to a minimum 90% and maximum 95% of maximum dry density as determined by ASTM Test 1557 with 4 feet (1220) from the backside of the wall. The minimum unit weight is 120 pcf, with minimum friction angle of 34°. Do not use heavy equipment in this area. Compact structure backfill beyond 4 feet (1220) from back of wall units in accordance with Section 1001.3(q)2b.

3. Build up the Everwall units and backfilling simultaneously to ensure that the elevation of the fill behind the wall and the fill within the units not differ by more than 24 inches (610). Fill the units first and behind the wall second to prevent the units from sliding. At the end of each day, slope the last level of backfill away from the wall in order to direct runoff away from the wall face. In addition do not allow surface runoff from adjacent areas to enter the wall construction site.

4. Do not disturb the alignment of the Everwall units during backfilling and compaction operations. Remove and replace any wall materials which become damaged during backfill placement. Correct any misalignment or distortion of the wall units due to placement or backfill.

5. Unless otherwise specified by soils report, ensure compaction within the Everwall unit framework to a minimum of 90% relative compaction per ASTM D1556. Compaction tests shall be taken at the center of the Everwall unit, approximately one third of the distance from the back.

6. For applications where stub abutments are to be used to support bridge or other structural loads, compact the top 5 feet (1500mm) below footing elevation to 100% of the determined dry mass (weight) density.

Tolerances for Finished Walls

The finished front face of the wall shall be as shown on the project plans, within the following tolerances:

(1)	Variation in any one course	Not more than 1 inch (25) variation from 1 foot (300) straight edge
(2)	Relative position of of adjacent in any one course in plan or elevation	Within 1 inch (25) of true alignment
(3)	Variation in front batter slope from design slope	± 1 inch (25) of true alignment
(4)	Variation within batter slope	Not more than 1/2 inch (12) from a 10 foot straight edge
(5)	Variation from plane surface along the wall for straight walls.	Not more than 1/2 inch (12) from a 10 foot (3050) straight edge
(6)	Opening of gaps between elements	± 2 inches (200) except in curved areas ± 4 inches

(e) Technical Assistance. Arrange for a company representative to be present at the project site to assist the fabricator, Contractor, and Engineer until they are familiar and confident in casting, installation, and erection procedures. Arrange for monthly visits to the project site by a company representative/ engineer during wall construction. Provide a technical representative to assist in the event unusual problems or special circumstances arise.

IV. MEASUREMENT AND PAYMENT

Everwall Retaining Wall System – Square Foot or (Square Meter). (Measured along the slanted wall face from the top of foundation unit to the top of the highest unit).

SEP 30 2005

COMMONWEALTH OF PENNSYLVANIA
DEPARTMENT OF TRANSPORTATION

EVERWALL ABUTMENT AND RETAINING WALL SYSTEM
STANDARD DRAWINGS

CONSTRUCTION SPECIFICATIONS– SHT. 3 OF 3

PADOT DWG # PE# 2002-021

SHEET 4 of 25

File: sheet4.dwg Date/Time: June 10, 2005 8:52 a.m. Scale: 1=1 kriegel Xrefs:

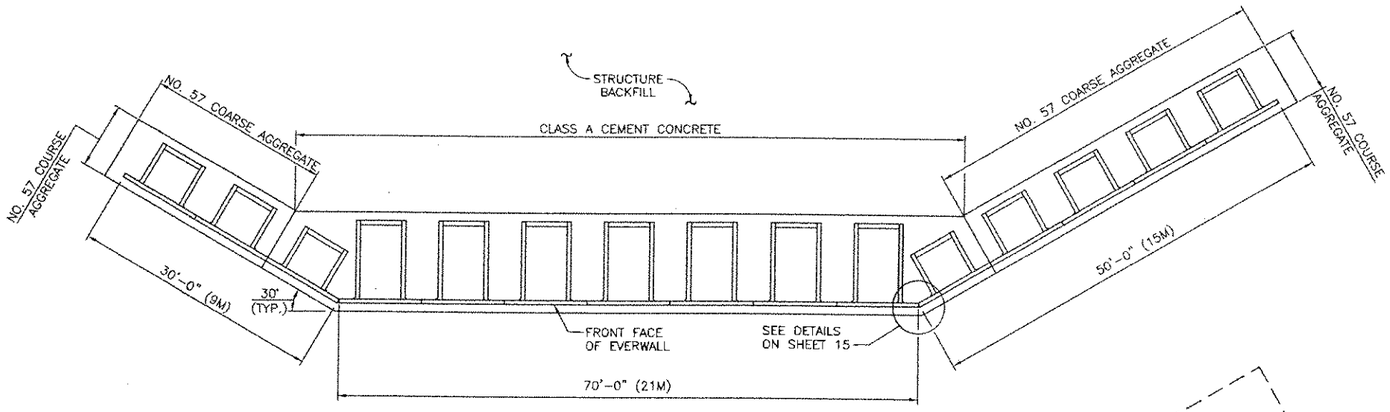

EVERWALL LEVELING PAD PLAN

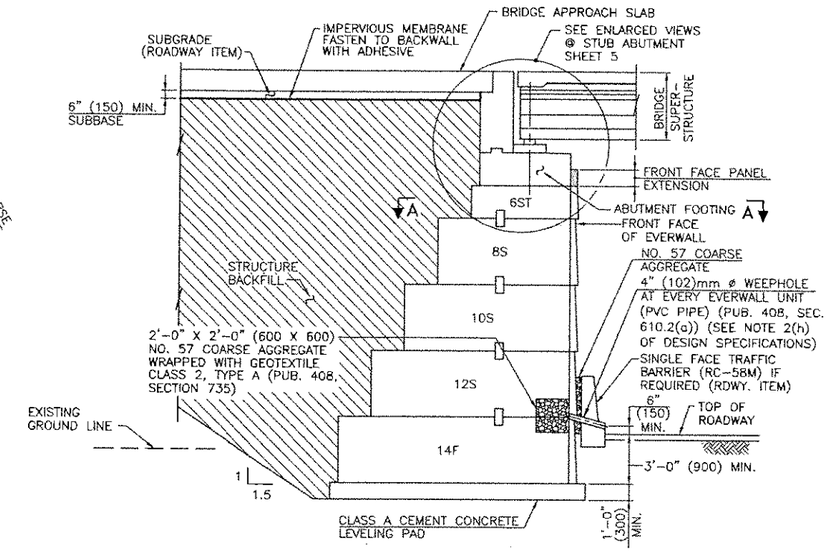

TYPICAL SECTION @ BRIDGE ABUTMENT

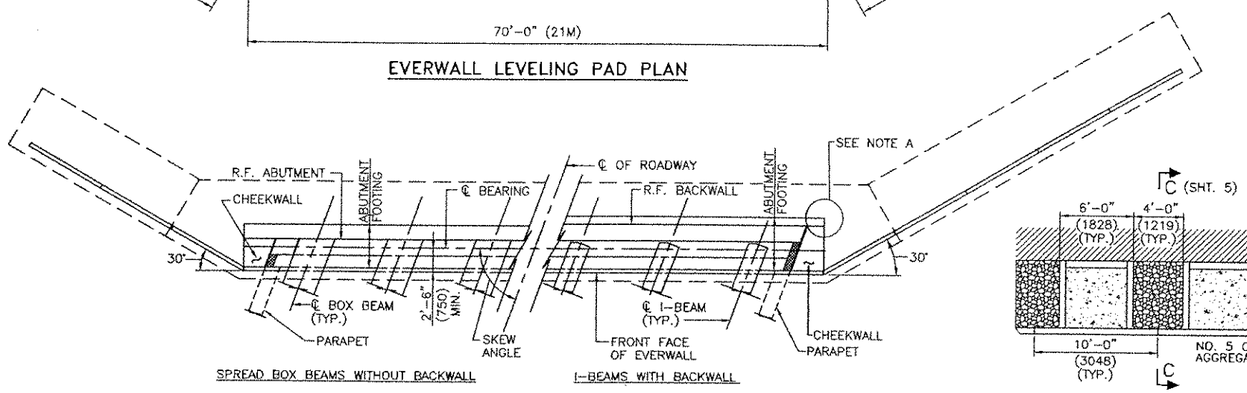

PLAN

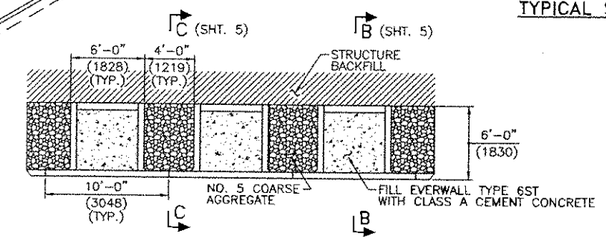

SECTION A-A

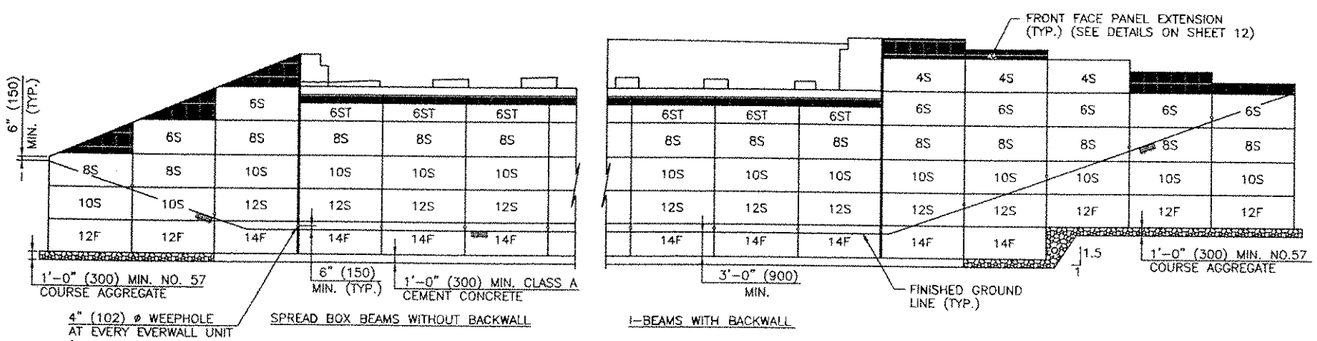

ELEVATION

NOTE A:

MODIFY CORNER DETAIL TO PLACE CONCRETE FOOTING AGAINST THE NEXT EVERWALL UNIT IF IT INTERFERES WITH FOOTING PLACEMENT AS SHOWN.

NOTES:

- FOR DESIGN SPECIFICATIONS, SEE SHEET 1.
- USE DESIGN INFORMATION SHOWN ON SHEET 12 AND THE FACTORED BEARING RESISTANCE APPROVED BY THE DEPARTMENT TO DETERMINE COMPOSITION OF EACH STACK OF EVERWALL PRECAST UNITS.
- IF NECESSARY, DESIGN A CONCRETE FOOTING FOR THE EVERWALL BY USING A WIDTH LARGER THAN THE DEPTH OF THE FIRST LEVEL OF EVERWALL UNITS AND COMBINING WITH EVERWALL UNITS TO REDUCE THE FACTORED BEARING PRESSURE TO MEET THE DEPARTMENT'S APPROVED FACTORED BEARING RESISTANCE.
- WALL UNITS SHOWN ARE FOR ILLUSTRATION PURPOSES ONLY.
- FOR ABUTMENT AND WINGWALL CROSS SECTIONS, SEE SHEET 6.
- FOR MORE WEEPHOLE DETAIL, SEE SHEET 9.
- FOR EVERWALL UNIT DESIGN INFORMATION, SEE SHEET 12.
- FOR EVERWALL UNIT DIMENSIONS, SEE SHEET 13.
- FOR EVERWALL FRONT FACE PANEL EXTENSION, SEE SHEET 12.
- EVERWALL 6ST IS EVERWALL UNIT TYPE 6S WITH FRONT FACE EXTENSION, SEE DETAILS ON SHEET 14.

SEP 30 2005

COMMONWEALTH OF PENNSYLVANIA
DEPARTMENT OF TRANSPORTATION

EVERWALL ABUTMENT AND RETAINING WALL SYSTEM
STANDARD DRAWINGS
SAMPLE EVERWALL ABUTMENT AND TYPICAL ABUTMENT SECTION

PADOT DWG # PE# 2002-021

SHEET 5 of 25

File: SHT 4.dwg Date/Time: June 10, 2005 11:08 a.m. Scale: 1=1 kriegel Xrefs:

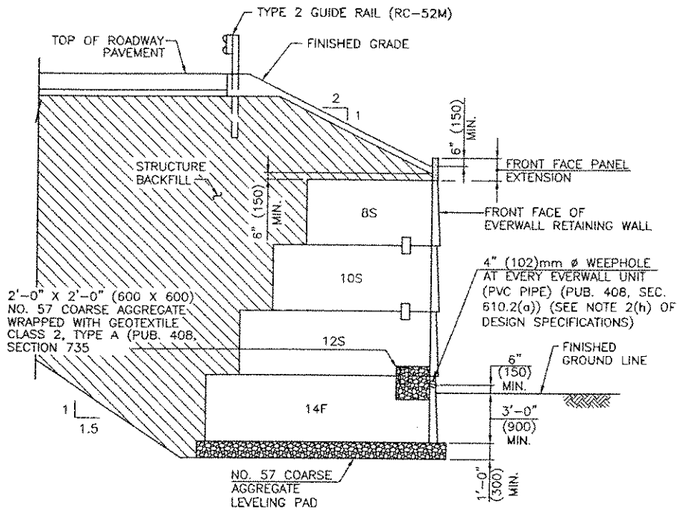

TYPICAL SECTION @ FLARED WING

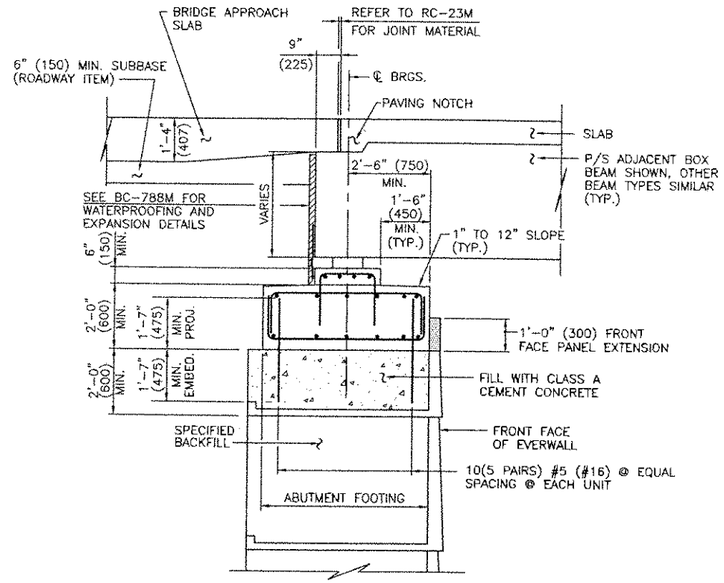

SECTION B-B

(ENLARGED VIEW @ STUB ABUTMENT WITHOUT BACKWALL @ INSIDE OF TWO VERTICAL PANELS OF EACH EVERWALL UNIT)

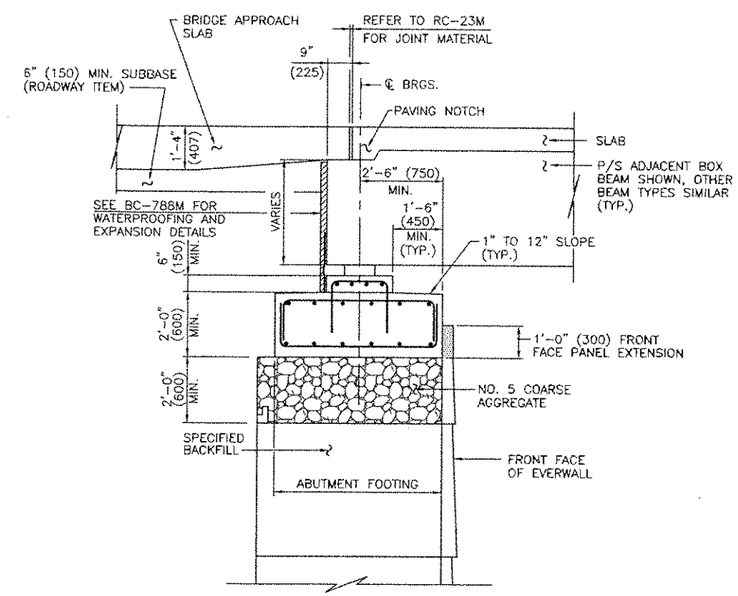

SECTION C-C

(ENLARGED VIEW @ STUB ABUTMENT WITHOUT BACKWALL @ OUTSIDE OF TWO VERTICAL PANELS OF EACH EVERWALL UNIT)

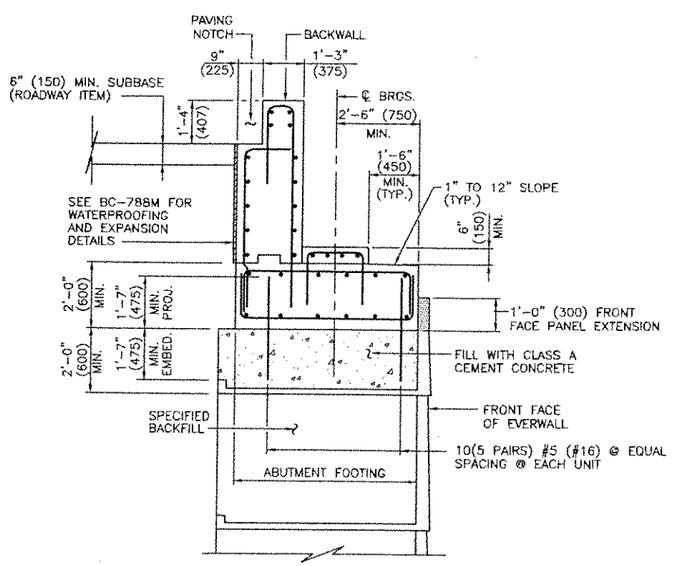

SECTION B-B

(ENLARGED VIEW @ STUB ABUTMENT WITH BACKWALL @ INSIDE OF TWO VERTICAL PANELS OF EACH EVERWALL UNIT)

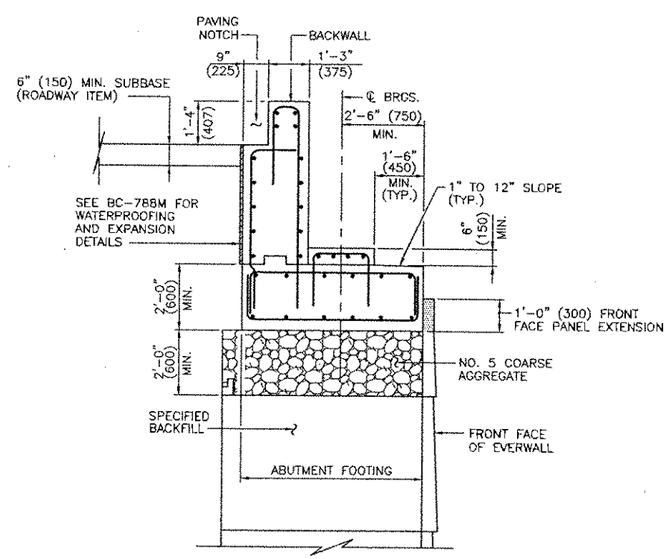

SECTION C-C

(ENLARGED VIEW @ STUB ABUTMENT WITH BACKWALL @ OUTSIDE OF TWO VERTICAL PANELS OF EACH EVERWALL UNIT)

NOTES:

- INCORPORATE THIS SHEET WITH SHEET 5.
- DESIGN ABUTMENT FOOTING AS A CONTINUOUS BEAM SUPPORTED ON 6 FT. (1830) WIDE CONCRETE FOOTING WITH 4 FT. (1220) CLEAR SPAN.
- FOR MORE WEEPHOLE DETAIL, SEE SHEET 9.

SEP 30 2005

COMMONWEALTH OF PENNSYLVANIA
DEPARTMENT OF TRANSPORTATION

EVERWALL ABUTMENT AND RETAINING WALL SYSTEM
STANDARD DRAWINGS
SAMPLE EVERWALL ABUTMENT DETAILS AND WING CROSS SECTION

PADOT DWG # PE# 2002-021

SHEET 6 of 25

File: SHT 5.dwg Date/Time: June 10, 2005 11:05 a.m. Scale: 1=1 kriegel Xrefs:

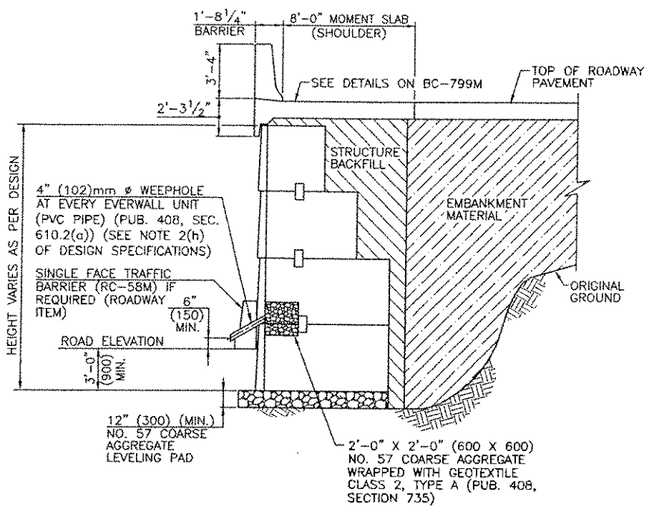

TYPICAL EMBANKMENT SECTION WITH MOMENT SLAB – 1

(WALL UNITS SHOWN FOR ILLUSTRATION PURPOSES ONLY)

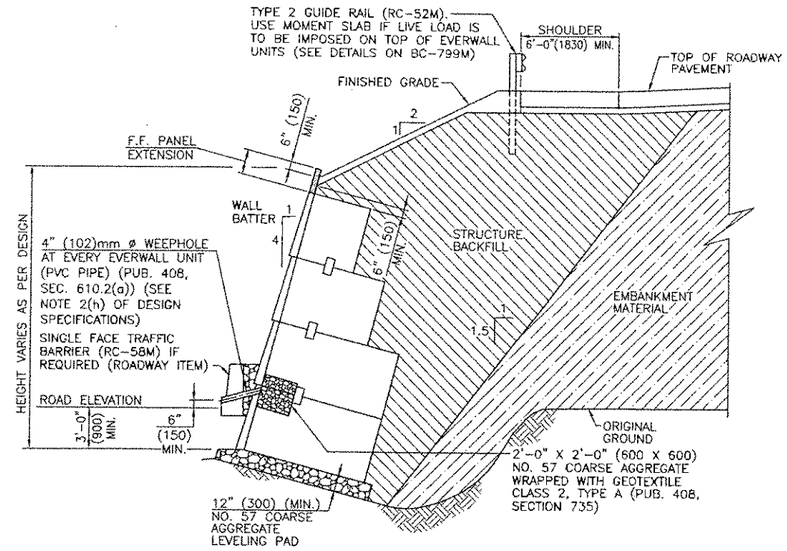

TYPICAL EMBANKMENT SECTION – 2

(WALL UNITS SHOWN FOR ILLUSTRATION PURPOSES ONLY)

NOTES:

- FOR DESIGN SPECIFICATIONS, SEE SHEET 1.
- USE DESIGN INFORMATION SHOWN ON SHEET 11 AND THE FACTORED BEARING RESISTANCE APPROVED BY THE DEPARTMENT TO DETERMINE THE COMPOSITION OF EACH STACK OF EVERWALL PRECAST UNITS.
- IF NECESSARY, DESIGN A CONCRETE FOOTING FOR THE EVERWALL BY USING A WIDTH LARGER THAN THE DEPTH OF THE FIRST LEVEL OF EVERWALL UNITS AND COMBINING WITH EVERWALL UNITS TO REDUCE THE FACTORED BEARING PRESSURE TO MEET THE DEPARTMENT'S APPROVED FACTORED BEARING RESISTANCE.
- WALL UNITS SHOWN ARE FOR ILLUSTRATION PURPOSES ONLY.
- FOR SAMPLE EVERWALL PLAN, ELEVATION, & TYPICAL ABUTMENT SECTION, SEE SHEET 5.
- FOR ABUTMENT AND WINGWALL CROSS SECTIONS, SEE SHEET 6.
- FOR MORE WEEPHOLE DETAIL, SEE SHEET 9.
- FOR DESIGN INFORMATION ON EVERWALL UNIT, SEE SHEET 12.
- FOR EVERWALL UNIT DIMENSIONS, SEE SHEETS 13.
- FOR EVERWALL FRONT FACE PANEL EXTENSION, SEE SHEET 14.

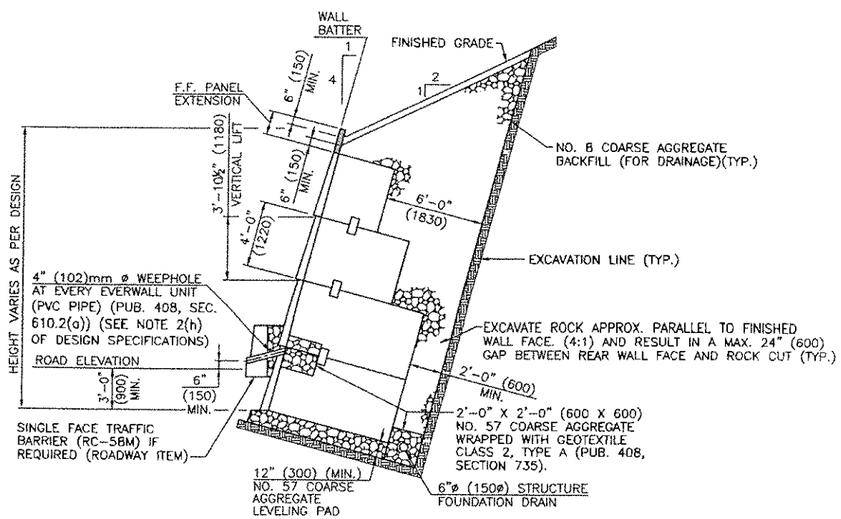

TYPICAL CUT SECTION

(WALL UNITS SHOWN FOR ILLUSTRATION PURPOSES ONLY)

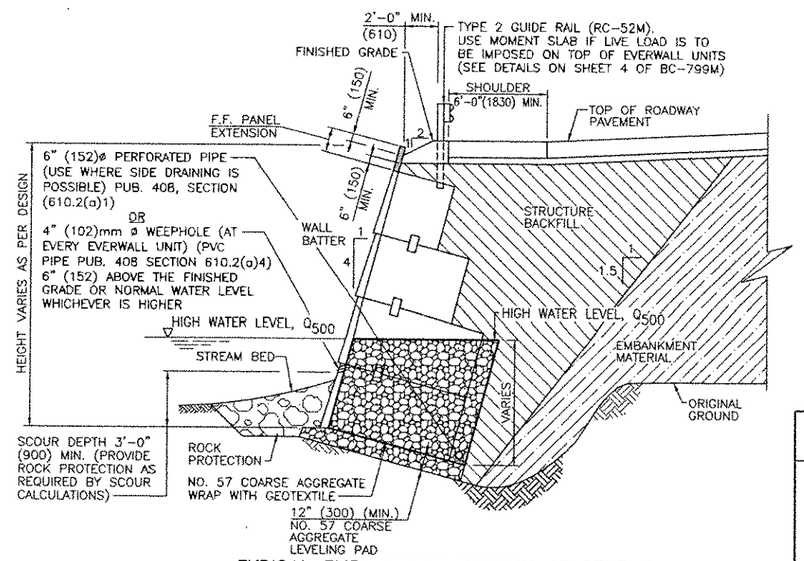

TYPICAL EMBANKMENT SECTION AT STREAM

(WALL UNITS SHOWN FOR ILLUSTRATION PURPOSES ONLY)
DETAIL TO BE USED WHERE HIGH WATER IN FRONT OF THE WALL IS ANTICIPATED

SEP 30 2005

COMMONWEALTH OF PENNSYLVANIA
DEPARTMENT OF TRANSPORTATION

EVERWALL ABUTMENT AND RETAINING WALL SYSTEM
STANDARD DRAWINGS

SAMPLE EVERWALL RETAINING WALLS

PADOT DWG # PE# 2002-021

SHEET 7 of 25

File: SEC SHT.dwg Date/Time: June 10, 2005 11:05 a.m. Scale: 1=1 Kriegel Xrefs:

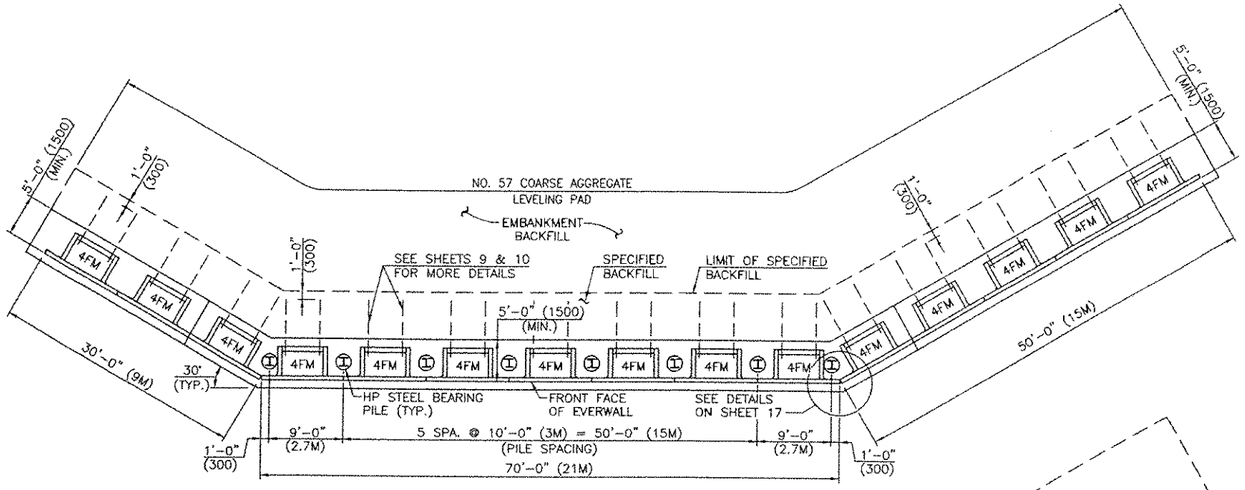

EVERWALL LEVELING PAD PLAN

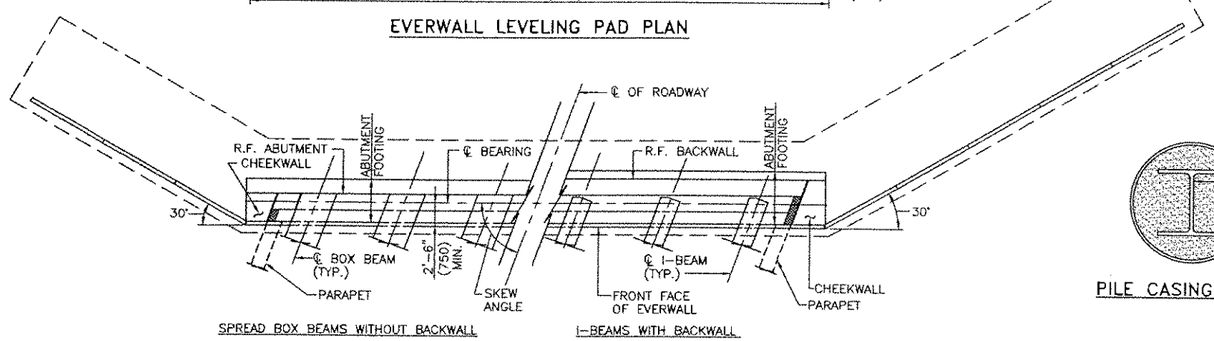

PLAN

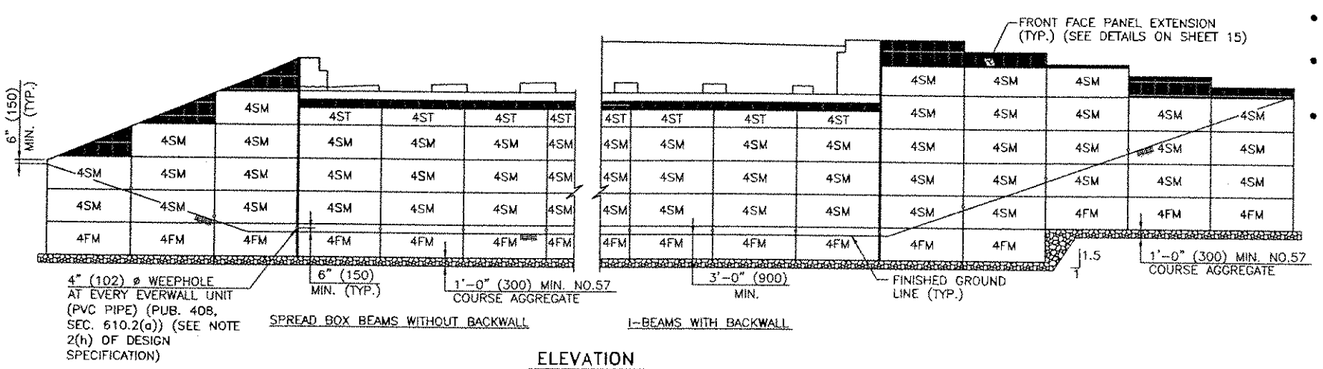

ELEVATION

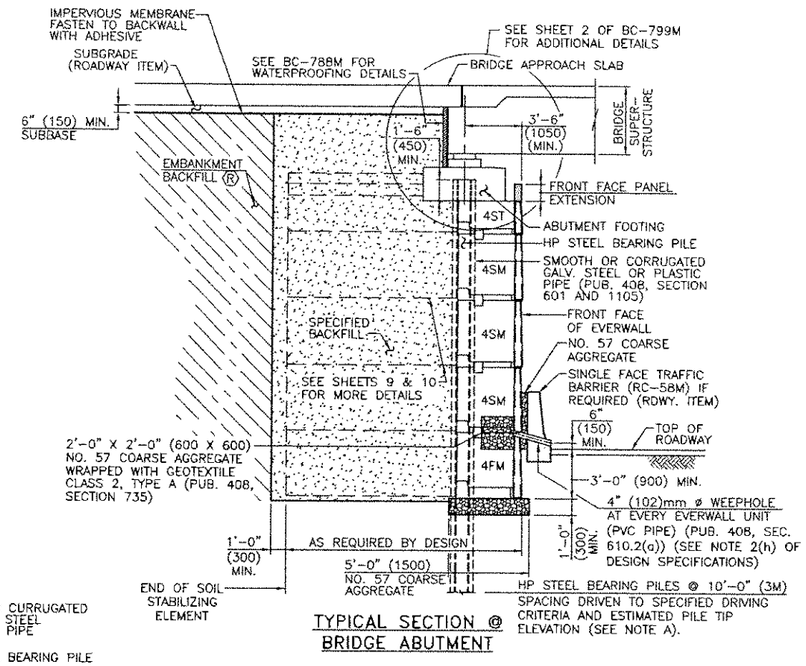

TYPICAL SECTION @ BRIDGE ABUTMENT

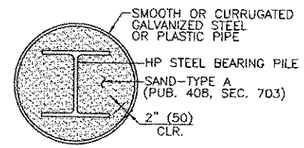

PILE CASING DETAIL

NOTE A:

- MAINTAIN MINIMUM OF 6" CLEARENCE BETWEEN THE EDGE OF THE TOP OF THE DRIVEN H-PILE AND THE EDGE OF TOP EVERWALL UNIT IN THE FINAL POSITION WITH 1" TOLLERENCE.
- SURVEY THE H-PILE LOCATION ACCURATELY PRIOR TO DRIVING.
- SURVEY THE EDGE OF THE TOP OF ALL DRIVEN H-PILES IN THE FINAL POSITION RELATED TO THE EDGE OF TOP EVERWALL UNIT.
- EXTRACT AND REDRIVE THE H-PILES, WHICH DOES NOT MEET THE MINIMUM CLEARENCE AT NO ADDITIONAL COST TO THE DEPARTMENT.

NOTES:

- FOR DESIGN SPECIFICATIONS, SEE SHEET 1.
- USE FACTORED BEARING RESISTANCE APPROVED BY THE DEPARTMENT TO DETERMINE THE REQUIRED LENGTH OF METAL STRAP OR WIRE MESH.
- FOR DETAILS OF SOIL STABILIZING ELEMENTS AT STUB ABUTMENT, SEE SHEET 2 OF BC-799M.
- FOR ABUTMENT FOOTING DETAILS, SEE SHEET 6.
- FOR MORE WEEPHOLE DETAIL, SEE SHEET 9.
- FOR SOIL STABILIZING ELEMENT DETAILS, SEE SHEETS 10 & 11.
- FOR EVERWALL UNIT DIMENSIONS, SEE SHEET 13.
- FOR EVERWALL FRONT FACE PANEL EXTENSION, SEE SHEET 14.
- EVERWALL 4ST IS EVERWALL UNIT TYPE 4S WITH FRONT FACE EXTENSION, SEE DETAILS ON SHEET 14.
- DESIGN HP STEEL BEARING PILES IN ACCORDANCE WITH SECTION 11.9.7.1P OF DM-4.

(R) = ROADWAY ITEM

SEP 30 2005

COMMONWEALTH OF PENNSYLVANIA
DEPARTMENT OF TRANSPORTATION

EVERWALL ABUTMENT AND RETAINING WALL SYSTEM STANDARD DRAWINGS

SAMPLE M.S.E. ABUTMENT WITH EVERWALL UNITS & TYPICAL ABUTMENT CROSS SECTION

PADOT DWG # PE# 2002-021

SHEET 8 of 25

File: SHT 7.dwg Date/Time: June 10, 2005 11:02 a.m. Scale: 1=1 kriegel Xrefs:

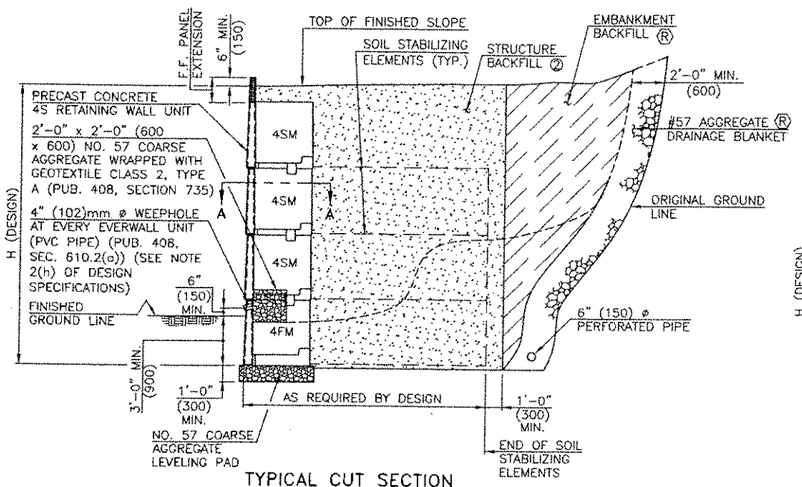

TYPICAL CUT SECTION
M.S.E. RETAINING WALL WITH EVERWALL UNITS

SCALE: NONE

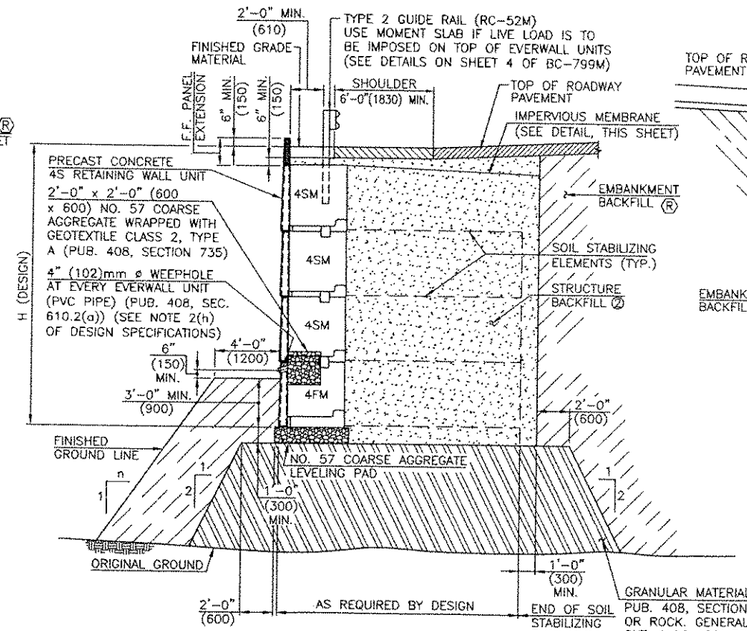

TYPICAL FILL SECTION
M.S.E. RETAINING WALL WITH EVERWALL UNITS

SCALE: NONE

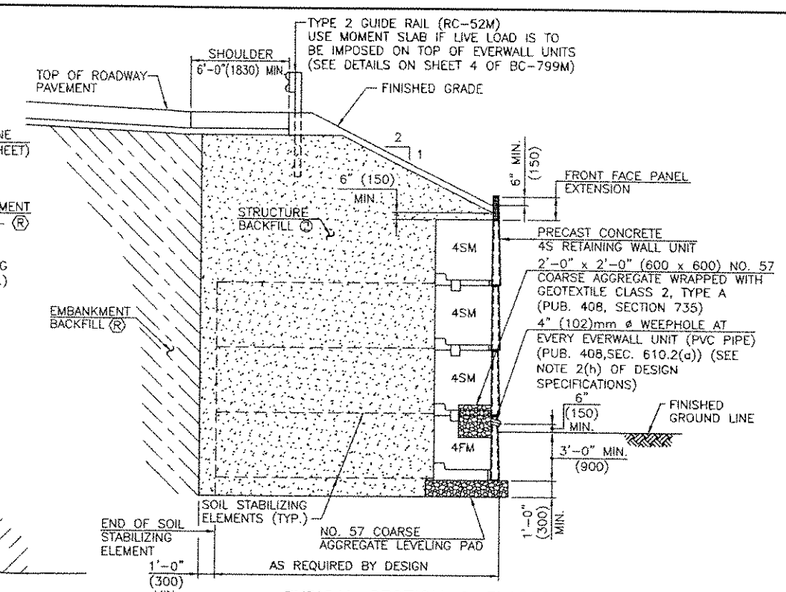

TYPICAL SECTION @ FLARED WING
M.S.E. RETAINING WALL WITH EVERWALL UNITS

SCALE: NONE

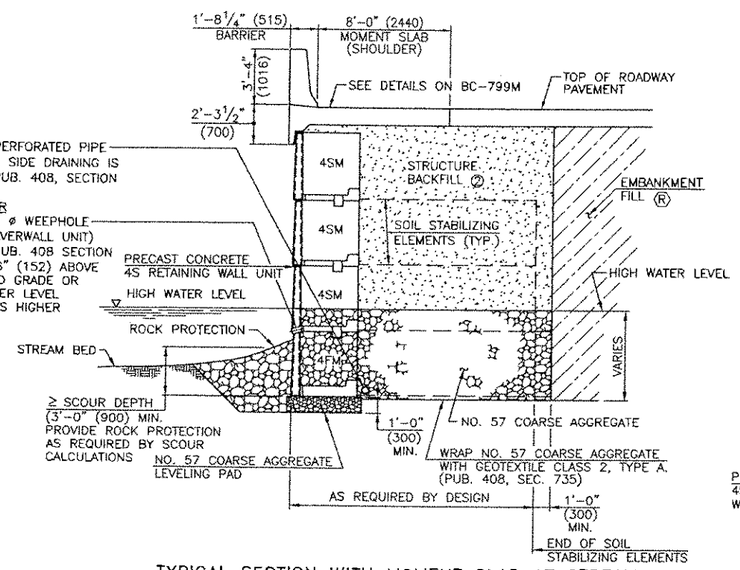

TYPICAL SECTION WITH MOMENT SLAB AT STREAM

DETAIL TO BE USED WHERE HIGH WATER LEVEL IN FRONT OF THE WALL IS ANTICIPATED

IMPERVIOUS MEMBRANE DETAIL

NOTE: PROVIDE IMPERVIOUS MEMBRANE WHEN SPECIFIED.

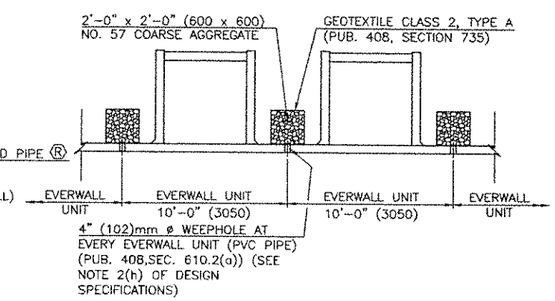

SECTION A-A @ WEEP HOLE

SCALE: NONE

Mark	Description	By	Chk'd.	Recm'd	Date
	REVISIONS				

STRUCTURE SEP 30 2005

COMMONWEALTH OF PENNSYLVANIA
DEPARTMENT OF TRANSPORTATION

EVERWALL ABUTMENT AND RETAINING WALL SYSTEM
STANDARD DRAWINGS
SAMPLE M.S.E. RETAINING WALLS WITH EVERWALL UNITS

PADOT DWG # PE# 2002-021

SHEET 9 of 25

NOTES:

1. THE DIFFERENCE BETWEEN SPECIFIED BACKFILL AND EMBANKMENT BACKFILL ELEVATIONS IS NOT TO BE MORE THAN 2'-0" (600 mm) AT ANY TIME DURING BACKFILLING.
2. FOR UNUSUAL COMBINATIONS OF SHARP SKEW AND/OR VERTICAL AND HORIZONTAL CURVATURE, THIS STANDARD MUST BE USED WITH CAUTION SINCE THESE CONDITIONS MAY REQUIRE SPECIAL DESIGN CONSIDERATIONS.

Ⓡ = ROADWAY ITEM

DES: L.C. | DWN: M.T.M. | DWN. CKD: L.C.

File: SHT9.dwg Date/Time: June 10, 2005 10:59 a.m. Scale: 1=1 kriegel Xrefs:

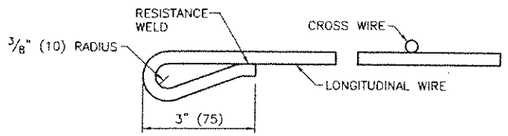

WIRE MESH LOOP DETAIL

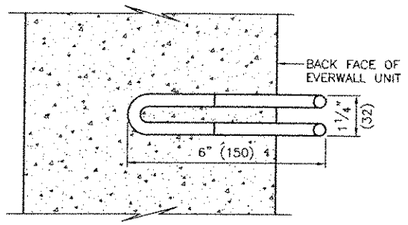

PLAN VIEW

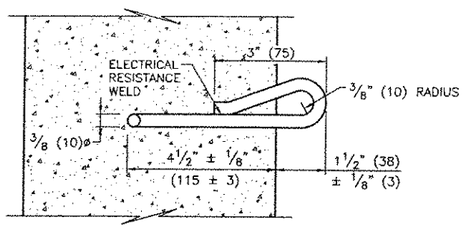

ELEVATION VIEW

CLEVIS LOOP DETAIL

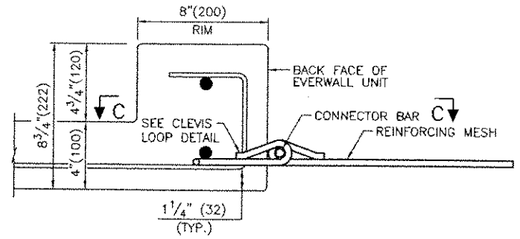

SECTION B–B

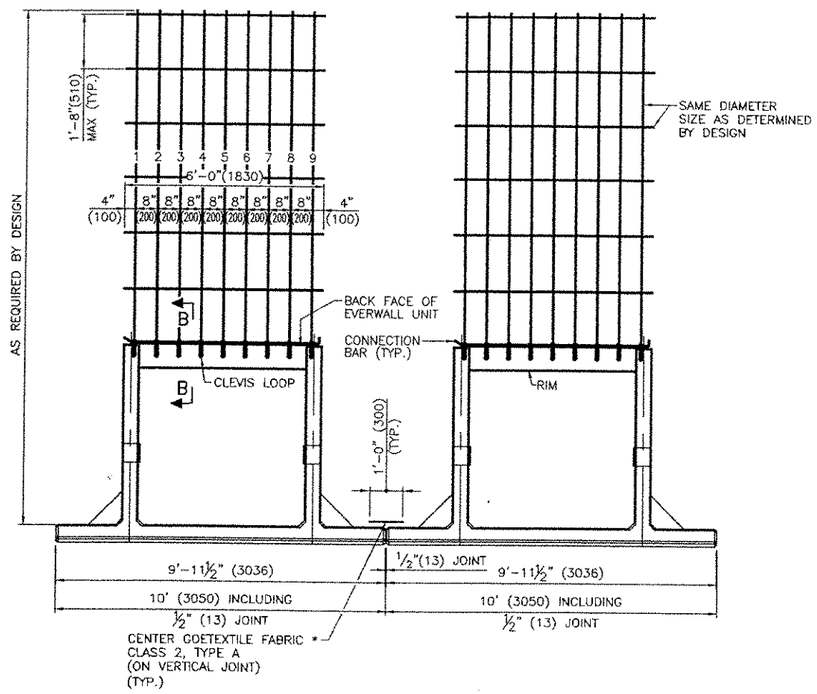

EVERWALL UNITS WITH REINFORCING MESH ANCHORING

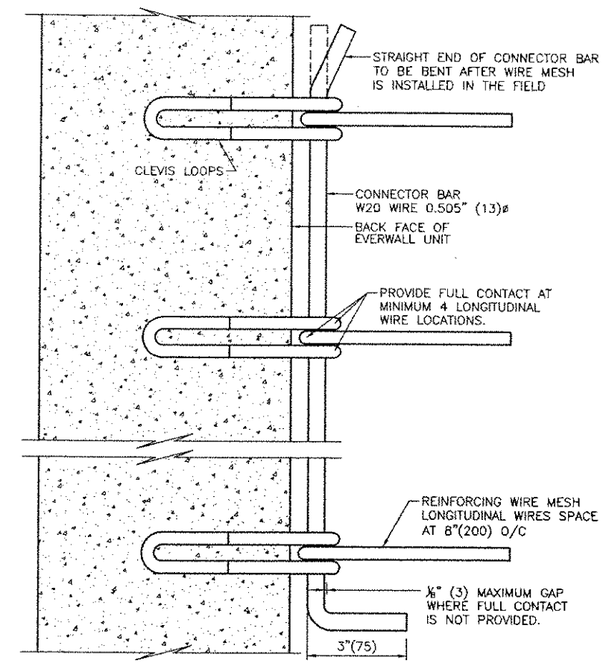

SECTION C–C
REINFORCING MESH CONNECTION DETAIL

NOTES:

- WORK THIS SHEET WITH SHEETS 8, 9, & 11.
- FOR EVERWALL UNIT DIMENSIONS SEE SHEET 13.
- FOR EVERWALL UNIT, TYPE 4SM & 4FM REINFORCEMENT DETAILS, SEE SHEET 18.
- ALL METAL PARTS ARE GALVANIZED.

SEP 30 2005

COMMONWEALTH OF PENNSYLVANIA
DEPARTMENT OF TRANSPORTATION

EVERWALL ABUTMENT AND RETAINING WALL SYSTEM
STANDARD DRAWINGS
REINFORCING MESH ANCHORING DETAILS FOR M.S.E. WALLS WITH EVERWALL UNITS

PADOT DWG # PE# 2002-021

SHEET 10 of 25

File: SHT10.dwg Date/Time: June 10, 2005 10:58 a.m. Scale: 1=1 kriegel Xrefs:

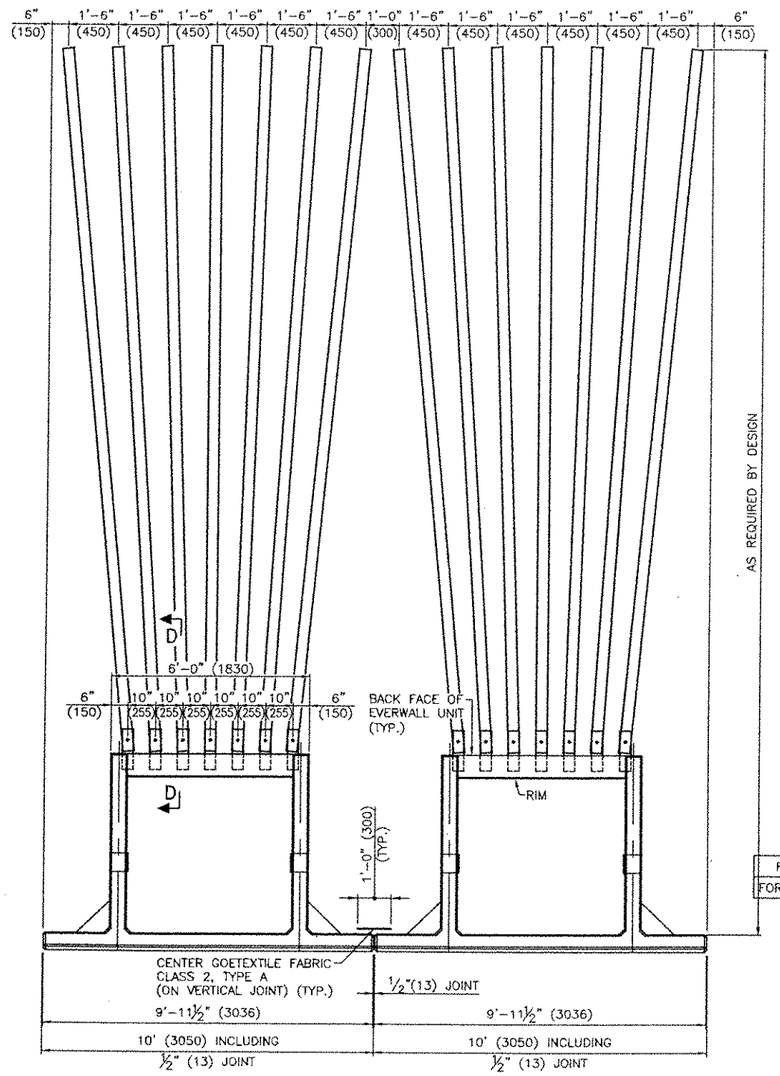

EVERWALL UNITS WITH REINFORCING STRIP PLAN

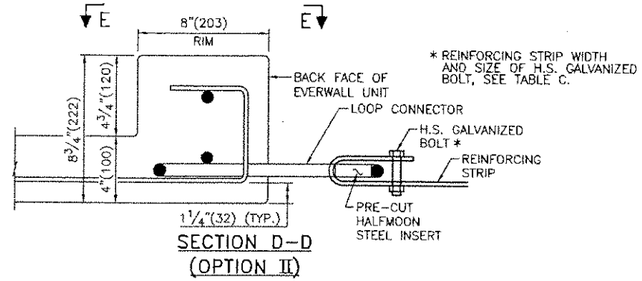

SECTION D-D
(OPTION II)

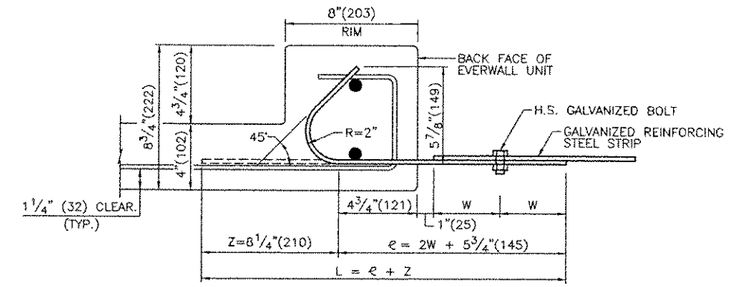

SECTION D-D
(OPTION I)

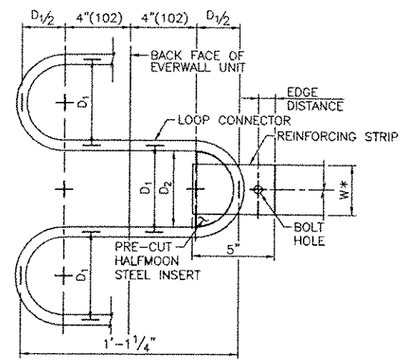

DETAIL A
LOOP CONNECTION DETAIL

TABLE A						
REINFORCING STRIP TYPE	REINFORCING STRIP WIDTH W	THICKNESS	REINFORCING STRIP CROSS-SECTIONAL AREA SQ.IN.(mm²)	H.S. BOLT SIZE	ℓ	L
#1	4"(102)	1/4"(6)	1.0(645)	3/4"(19)	13 3/4"(350)	22"(559)
#2	3"(76)	1/4"(6)	0.75(484)	3/4"(19)	11 3/4"(299)	22"(508)
#3	2"(51)	1/4"(6)	0.50(323)	1/2"(13)	9 3/4"(248)	18"(457)

H.S. = HIGH STRENGTH BOLT A325

TABLE B						
	LOOP CONNECTOR BAR SIZE	LOOP CONNECTOR BAR DIA.	NO. OF LOOPS M	D_1	D_2	EDGE DISTANCE
FOR HEIGHTS ≤ 40'	#4	1/2"(13)	7	5 1/4"(133)	4 3/4"(121)	1"(30)
FOR HEIGHTS ≥ 40' ≤ 55'	#5	5/8"(16)	7	5 1/4"(133)	4 5/8"(118)	1 1/4"(32)

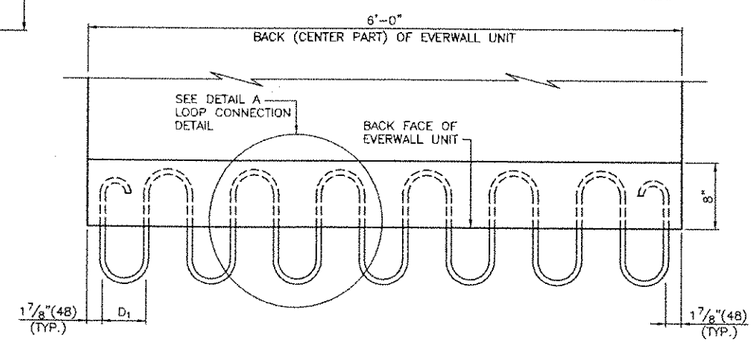

SECTION E-E
EVERWALL UNIT WITH LOOP CONNECTION PLAN

NOTES:

- WORK THIS SHEET WITH SHEETS 8, 9, & 10.
- FOR EVERWALL UNIT DIMENSIONS SEE SHEET 13.
- FOR EVERWALL UNIT, TYPE 4SM & 4FM REINFORCEMENT DETAILS, SEE SHEET 18.
- ALL METAL PARTS ARE GALVANIZED.

SEP 30 2005

COMMONWEALTH OF PENNSYLVANIA
DEPARTMENT OF TRANSPORTATION

EVERWALL ABUTMENT AND RETAINING WALL SYSTEM
STANDARD DRAWINGS

REINFORCING STRIP ANCHORING DETAILS FOR M.S.E. WALLS WITH EVERWALL UNITS

PADOT DWG # PE# 2002-021

SHEET 11 of 25

File: SHT 11.dwg Date/Time: June 10, 2005 10:58 a.m. Scale: 1=1 kriegel Xrefs:

TABLE C: DESIGN INFORMATION FOR USE OF EVERWALL UNITS ONLY

EVERWALL UNIT TYPE	EVERWALL DIMENSION		CONCRETE				EARTH FILL						TOTAL WEIGHT		DESIGN WEIGHT	
	DEPTH		VOLUME PER UNIT REQUIRED		WEIGHT PER UNIT		FILL VOLUME		FILL VOLUME PARTICIPATING FOR GRAVITY		FILL WEIGHT					
	ft	mm	cuyd	M3	kips	kg	cuyd	M3	cuyd	M3	kips	kg	kips	kg	kips/ft	kg/m
4S	4.0	1220	1.41	1.08	5.63	2554	4.39	3.36	3.21	2.45	9.71	4405	15.34	6959	1.53	2277
4F	4.0	1220	1.68	1.28	6.71	3044	4.13	3.16	2.94	2.25	8.89	4033	15.60	7077	1.56	2322
6S	6.0	1830	1.86	1.42	7.43	3371	6.91	5.28	5.06	3.87	15.30	6940	22.73	10 311	2.27	3379
6F	6.0	1830	2.25	1.72	8.99	4078	6.52	4.99	4.67	3.57	14.12	6405	23.11	10 483	2.31	3438
8S	8.0	2440	2.30	1.76	9.19	4169	9.43	7.21	6.91	5.28	20.90	9481	30.09	13 649	3.01	4480
8F	8.0	2440	2.81	2.15	11.23	5094	8.92	6.82	6.40	4.89	19.36	8782	30.59	13 876	3.06	4554
10S	10.0	3050	2.75	2.10	10.99	4985	4.95	3.79	8.76	6.70	26.49	12 016	37.48	17 001	3.75	5581
10F	10.0	3050	3.38	2.58	13.51	6129	11.31	8.65	8.12	6.21	24.56	11 140	38.07	17 269	3.81	5670
12S	12.0	3660	3.19	2.44	12.75	5784	14.46	11.06	10.61	8.11	32.09	14 556	44.84	20 340	4.48	6667
12F	12.0	3660	3.95	3.02	15.79	7163	13.70	10.48	9.85	7.53	29.79	13 513	45.58	20 675	4.56	6786
14S	14.0	4270	3.64	2.78	14.55	6600	16.98	12.98	12.46	9.53	37.68	17 092	52.23	23 692	5.22	7769
14F	14.0	4270	4.52	3.46	18.06	8192	16.10	12.31	11.58	8.85	35.02	15 885	53.08	24 077	5.31	7903
16S	16.0	4880	4.08	3.12	16.30	7394	19.50	14.91	14.31	10.94	43.28	19 632	59.58	27 025	5.96	8870
16F	16.0	4880	5.09	3.89	20.34	9227	18.49	14.14	13.30	10.17	40.22	18 244	60.56	27 470	6.06	9019

AVERAGE DESIGN FILL DENSITY GAMMA = 112 lbs PER cuft (1,794 kg/M3)
CONCRETE GAMMA = 148 lbs PER cuft (2,372 kg/M3)

NOTE:

- USE EVERWALL UNIT TYPE 16S BELOW 24' FROM THE TOP OF WALL, WITH EVERWALL UNIT 16F FOR THE BOTTOM UNIT.
- USE EVERWALL UNITS TYPE 4S TO 16S ABOVE 24' FROM THE TOP OF WALL AS REQUIRED BY THE DESIGN.

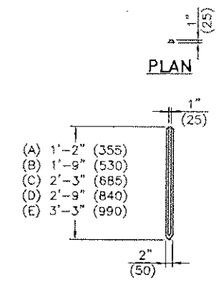

RUSTICATION DETAIL

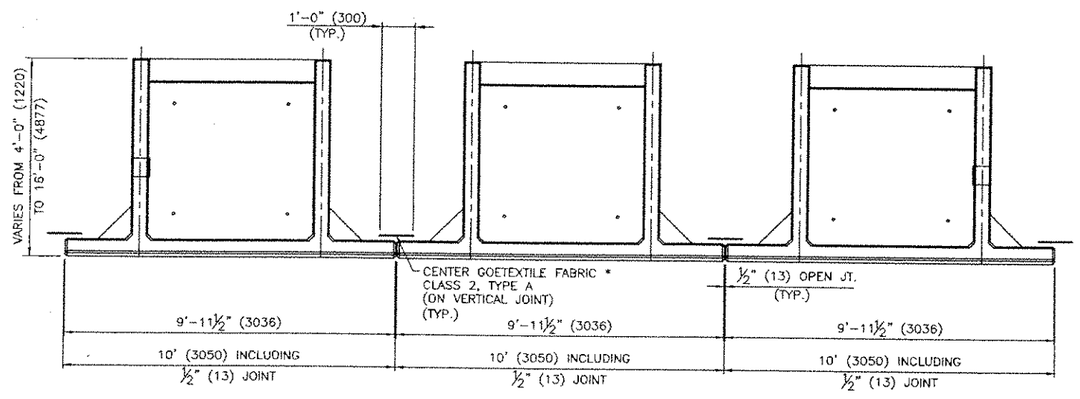

PLAN WITH EVERWALL UNITS ONLY

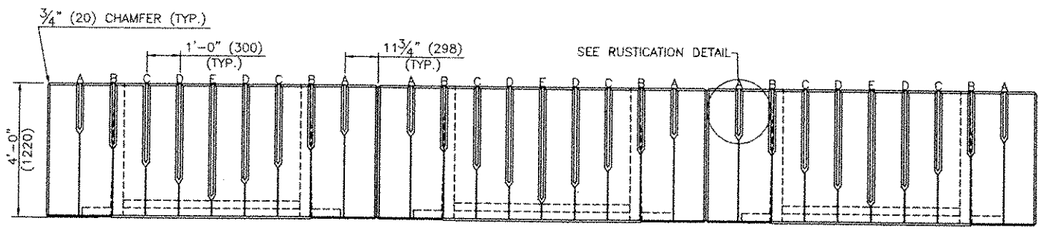

ELEVATION

EVERWALL TYPE DESIGNATION:

12FM

- 12 — UNIT DEPTH (FEET)
- M — INDICATES (M) FOR M.S.E. WALL CONSTRUCTION
- F — INDICATES FOUNDATION (F) OR STANDARD (S) EVERWALL UNIT

- THE NUMBER AT THE BEGINNING OF THE DESIGNATION SEQUENCE INDICATES THE EVERWALL UNIT DEPTH IN FEET.
- THE LETTER FOLLOWING THE UNIT DEPTH INDICATES EITHER A FOUNDATION UNIT (F) OR STANDARD UNIT (S).

EXAMPLE:
- EVERWALL UNIT TYPE 4FM IS A 4'-0" (1220) DEEP FOUNDATION EVERWALL UNIT FOR M.S.E. WALL CONSTRUCTION.
- EVERWALL UNIT TYPE 6S IS A 6'-0" (1830) DEEP STANDARD EVERWALL UNIT.

SEP 30 2005

COMMONWEALTH OF PENNSYLVANIA
DEPARTMENT OF TRANSPORTATION

EVERWALL ABUTMENT AND RETAINING WALL SYSTEM
STANDARD DRAWINGS
EVERWALL UNIT DESIGN INFORMATION FOR USE OF EVERWALL UNITS ONLY

PADOT DWG # PE# 2002-021

SHEET 12 of 25

File: SHT UNIT DES INFO.dwg Date/Time: June 13, 2005 9:29 a.m. Scale: 1=1 kriegel Xrefs:

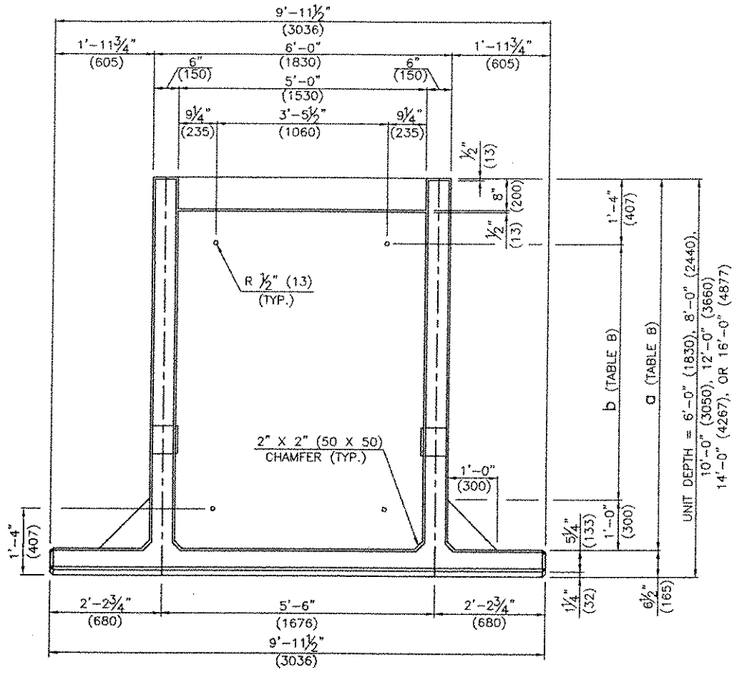

PLAN, TYPE 6F, 6S, 8F, 8S, 10F, 10S, 12F, 12S, 14F, 14S, 16F, & 16S

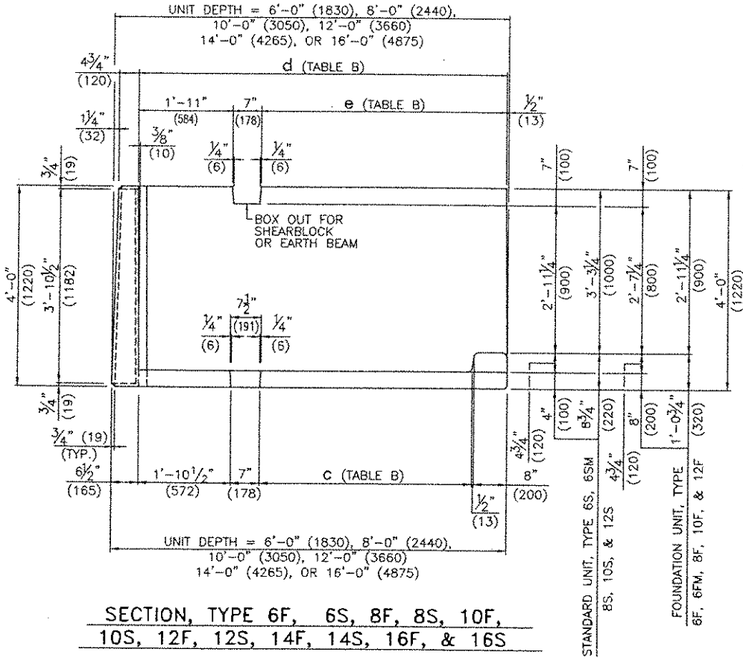

SECTION, TYPE 6F, 6S, 8F, 8S, 10F, 10S, 12F, 12S, 14F, 14S, 16F, & 16S

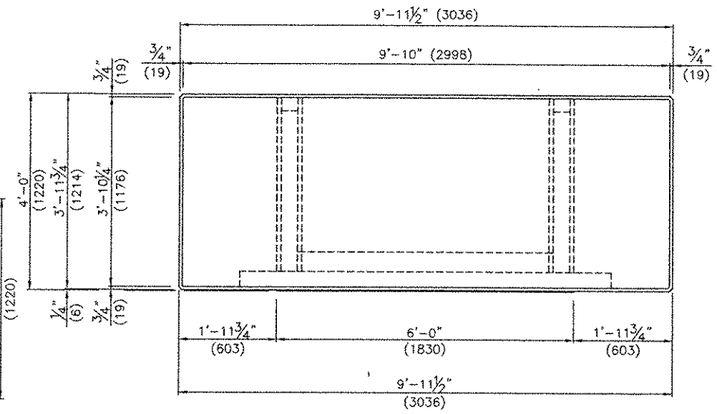

FRONT ELEVATION

NOTES:

- FOR EVERWALL UNIT DESIGN INFORMATION, SEE SHEET 12.
- WHEN EVERWALL TOP UNIT MODIFICATIONS ARE REQUIRED TO MATCH THE FINISHED GRADE SURFACE OR TO FIT SPECIFIC FIELD CONDITIONS, SEE EVERWALL TOP UNIT MODIFICATIONS ON SHEET 14.
- FOR REINFORCEMENT DETAILS, SEE SHEETS 17–25.

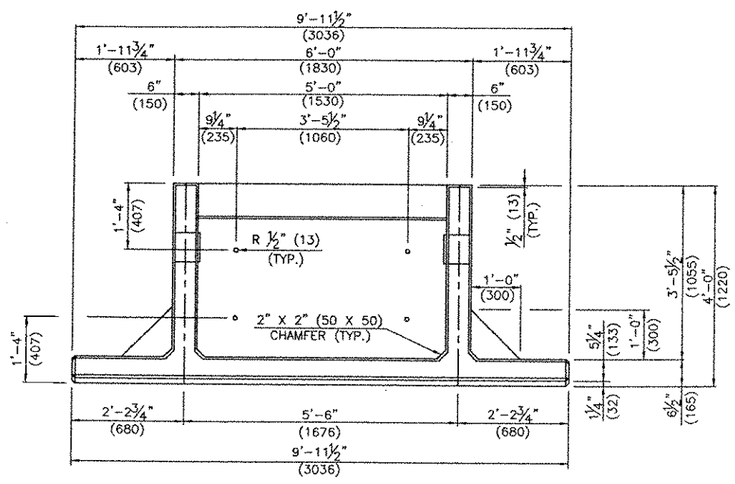

PLAN, TYPE 4F, 4FM, 4S & 4SM

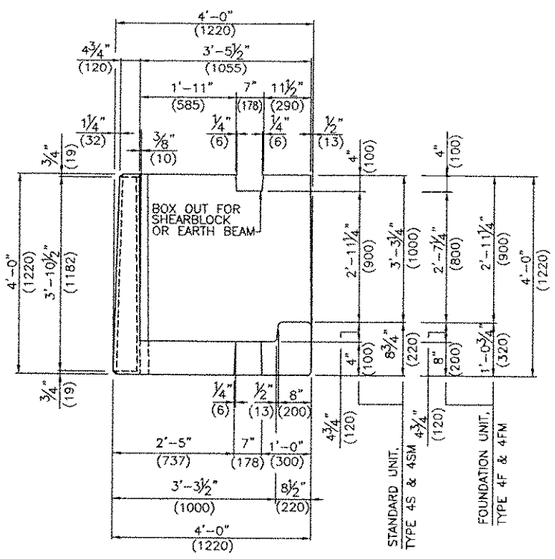

SECTION, TYPE 4F, 4FM, 4S & 4SM

TABLE E

TYPE	6F, 6S,	8F, 8S	10F, 10S	12F, 12S	14F, 14S	16F, 16S
UNIT DEPTH	6'-0" (1830)	8'-0" (2440)	10'-0" (3050)	12'-0" (3660)	14'-0" (4265)	16'-0" (4875)
a	5'-5½ (1665)	7'-5½ (2275)	9'-5½ (2885)	11'-5½ (3495)	13'-5½ (4100)	15'-5½ (4710)
b	3'-1½ (958)	5'-1½ (1568)	7'-1½ (2178)	9'-1½ (2788)	11'-1½ (3391)	13'-1½ (4000)
c	2'-3½ (700)	4'-3½ (1310)	6'-3½ (1920)	8'-3½ (2530)	10'-3½ (3140)	12'-3½ (3750)
d	5'-5½ (1665)	7'-5½ (2275)	9'-5½ (2885)	11'-5½ (3495)	13'-5½ (4100)	15'-5½ (4710)
e	2'-11½" (900)	4'-11½" (1510)	6'-11½" (2120)	8'-11½" (2730)	10'-11½" (3340)	12'-11½" (3950)

SEP 30 2005

COMMONWEALTH OF PENNSYLVANIA
DEPARTMENT OF TRANSPORTATION

EVERWALL ABUTMENT AND RETAINING WALL SYSTEM
STANDARD DRAWINGS
EVERWALL UNIT DIMENSIONS
– SHEET 1 OF 2

PADOT DWG # PE# 2002-021

File: DIM SHT.dwg Date/Time: June 10, 2005 10:50 a.m. Scale: 1=1 kriegel Xrefs:

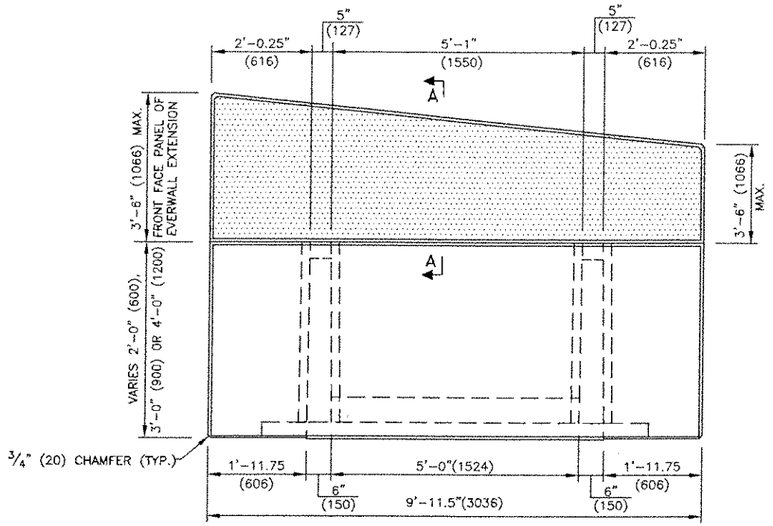

FRONT ELEVATION – EVERWALL TOP UNIT MODIFICATION – OPTION I

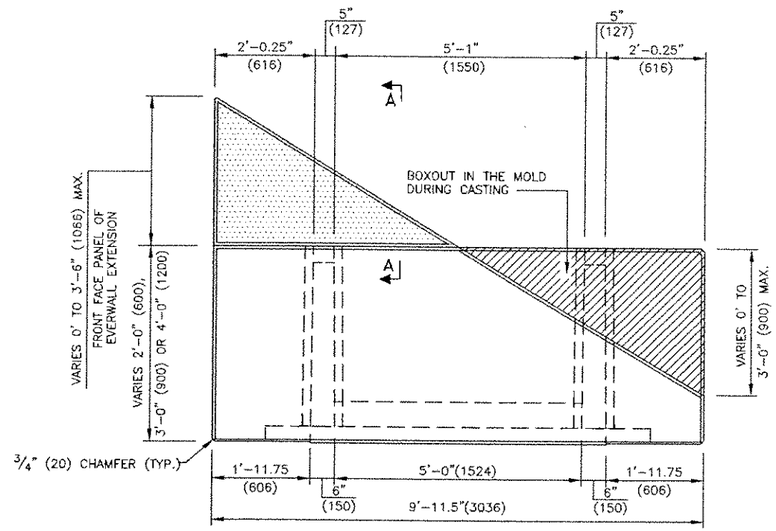

FRONT ELEVATION – EVERWALL TOP UNIT MODIFICATION – OPTION II

NOTES:

- INCORPORATE THIS SHEET WITH SHEET 13.
- PRIOR TO SELECTION, INVESTIGATE WHICH MODIFICATION IS BEST TO FIT THE FINISHED GROUND SURFACE FIELD CONDITION.

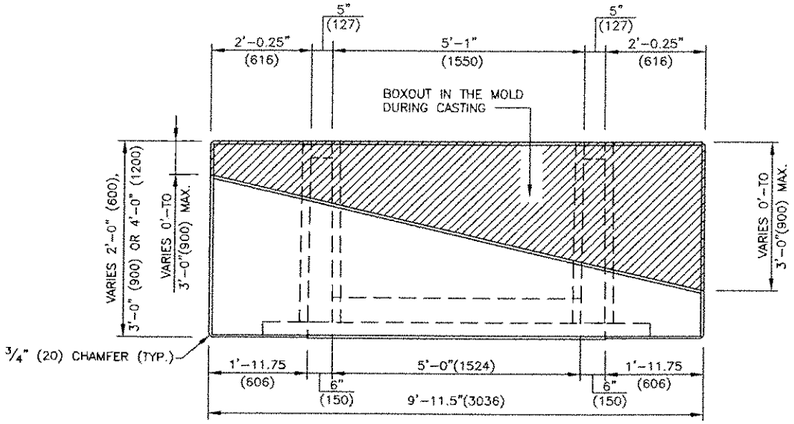

FRONT ELEVATION – EVERWALL TOP UNIT MODIFICATION – OPTION III

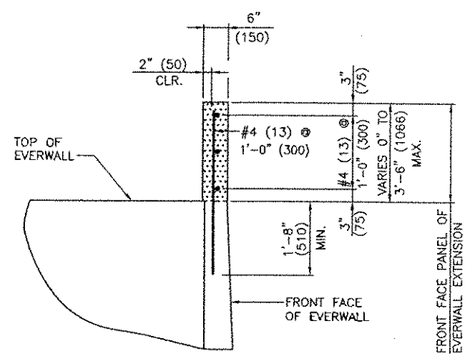

SECTION A–A (OPTION I)

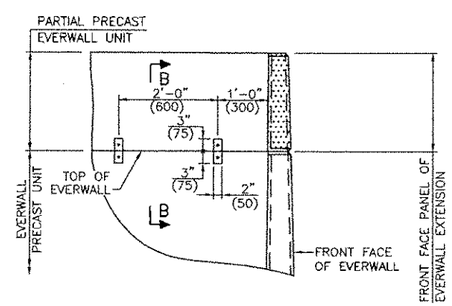

SECTION A–A (OPTION II)

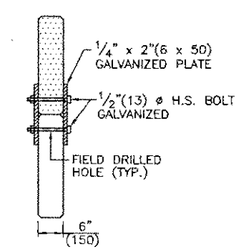

SECTION B–B

SEP 30 2005

COMMONWEALTH OF PENNSYLVANIA
DEPARTMENT OF TRANSPORTATION

EVERWALL ABUTMENT AND RETAINING WALL SYSTEM
STANDARD DRAWINGS
EVERWALL UNIT DIMENSIONS
– SHEET 2 OF 2

PADOT DWG # PE# 2002-021

SHEET 14 of 25

File: SHT 14.dwg Date/Time: June 10, 2005 10:50 a.m. Scale: 1=1 kriegel Xrefs:

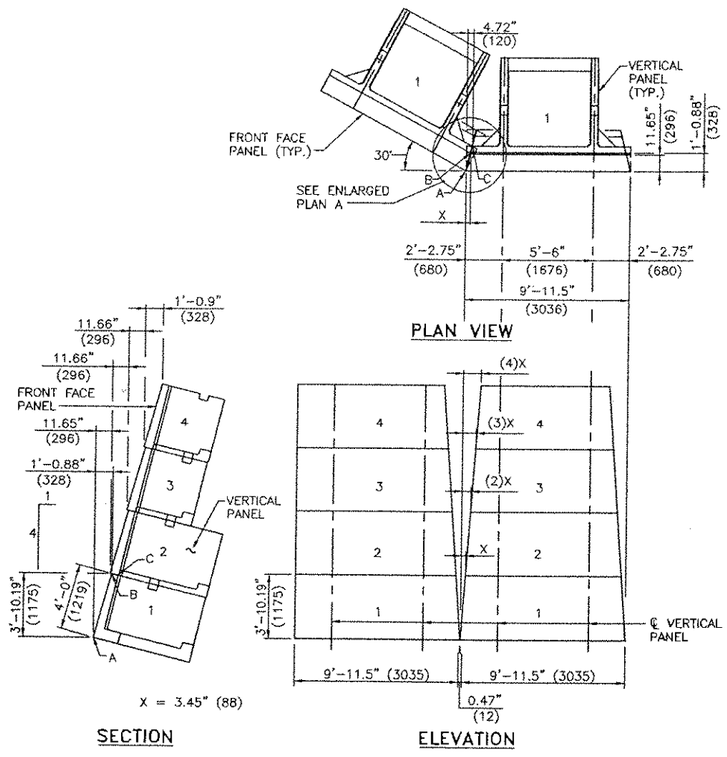

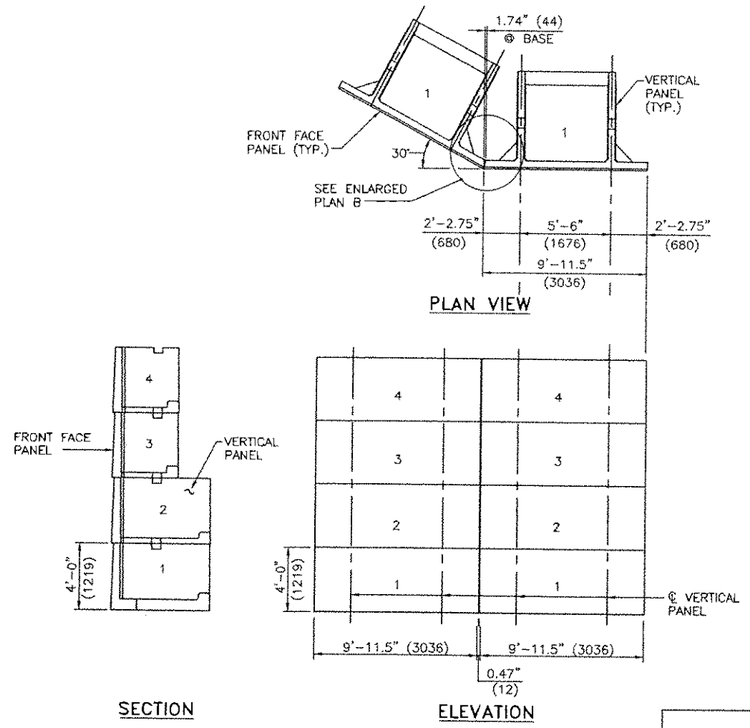

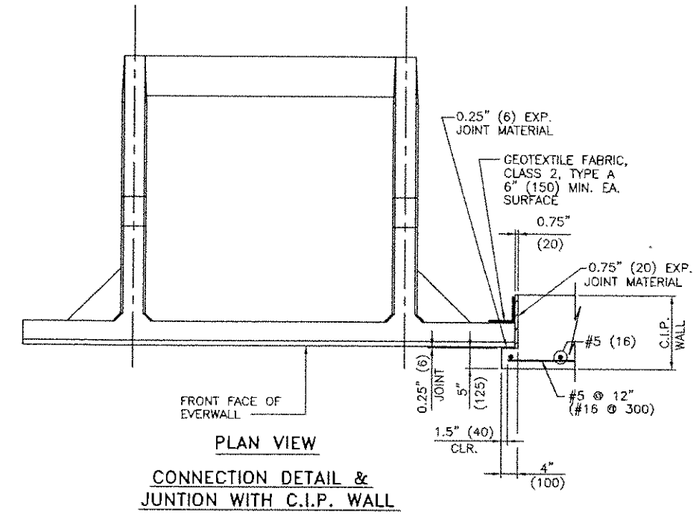

TABLE G												
DIMENSION	0°00'00" FT.	(MM)	15°00'00" FT.	(MM)	30°00'00" FT.	(MM)	45°00'00" FT.	(MM)	60°00'00" FT.	(MM)	75°00'00" FT.	(MM)
a	0'-0"	(0)	3/16"	(5)	3/8"	(9)	1/2"	(14)	3/4"	(19)	1"	(25)
b	0'-0"	(0)	7/8"	(22)	1 3/4"	(45)	2 11/16"	(69)	3 3/4"	(96)	5"	(127)
c	0'-0"	(0)	1/16"	(2)	1/8"	(4)	3/16"	(6)	1/4"	(8)	3/8"	(10)

a = TAN.(θ/2) * 1¼"(32)
b = TAN.(θ/2) * 6½"(165)
c = TAN.(θ/2) * ½"(13)

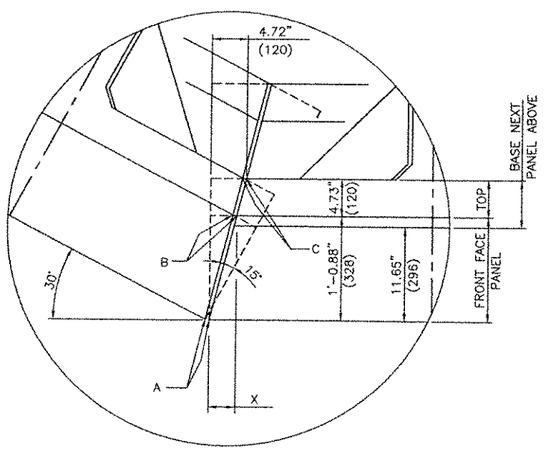

ENLARGED PLAN A

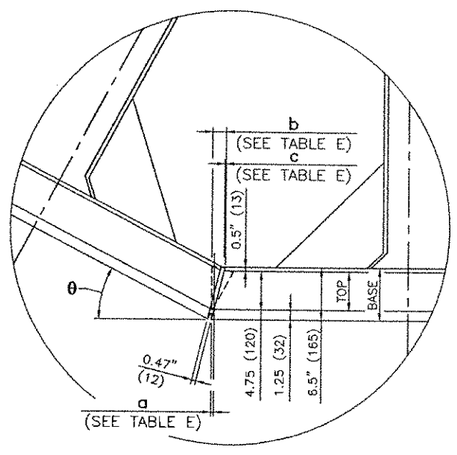

ENLARGED PLAN B

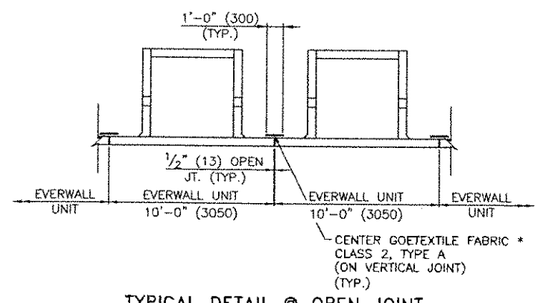

TYPICAL DETAIL @ OPEN JOINT

SEP 30 2005

COMMONWEALTH OF PENNSYLVANIA
DEPARTMENT OF TRANSPORTATION

EVERWALL ABUTMENT AND RETAINING WALL SYSTEM
STANDARD DRAWINGS
CORNER DETAILS
SHEET 1 OF 2

PADOT DWG # PE# 2002-021

SHEET 15 of 25

File: SHT 15.dwg Date/Time: June 10, 2005 10:49 a.m. Scale: 1=1 Kriegel Xrefs:

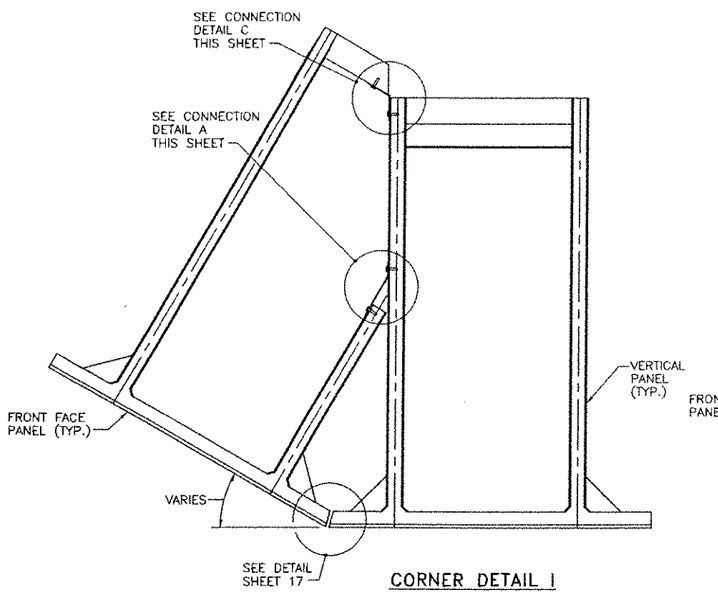

CORNER DETAIL I

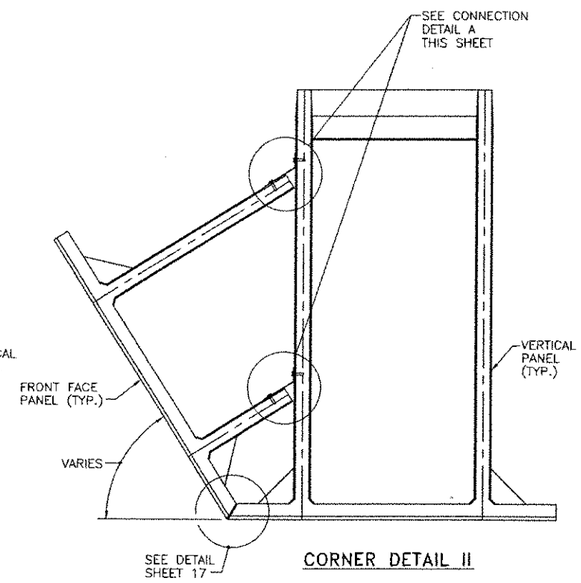

CORNER DETAIL II

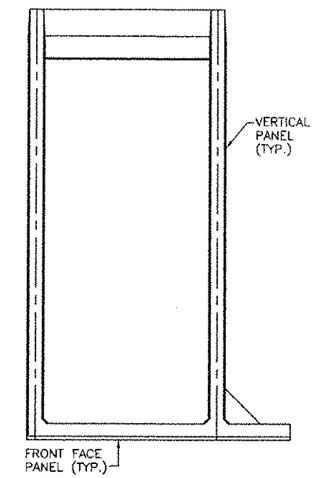

90° CORNER DETAIL III

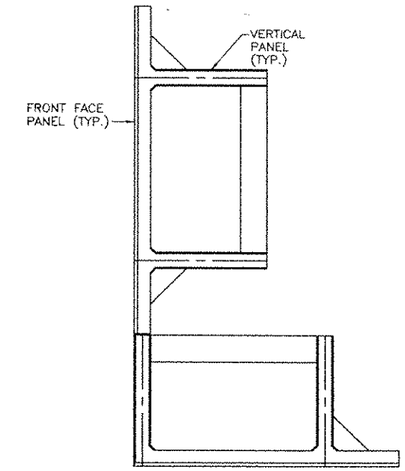

90° CORNER DETAIL IV

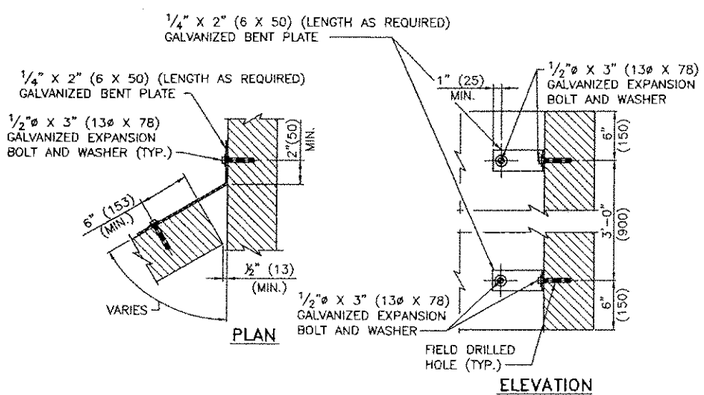

CONNECTION DETAIL A

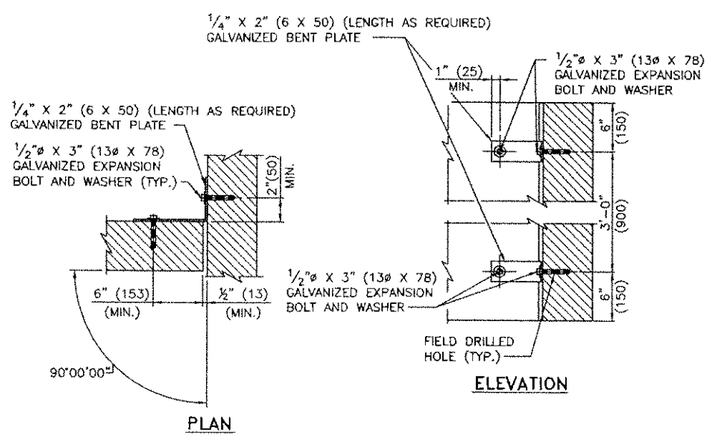

CONNECTION DETAIL B

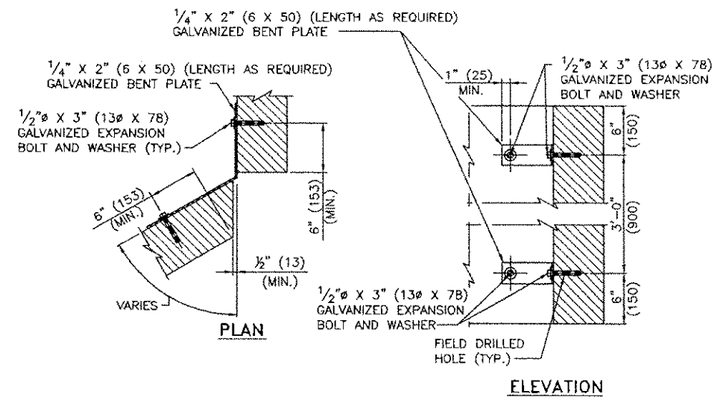

CONNECTION DETAIL C

SEP 30 2005

COMMONWEALTH OF PENNSYLVANIA
DEPARTMENT OF TRANSPORTATION

EVERWALL ABUTMENT AND RETAINING WALL SYSTEM
STANDARD DRAWINGS
CORNER DETAILS
SHEET 2 OF 2

PADOT DWG # PE# 2002-021

SHEET 16 of 25

File: SHT 16.dwg Date/Time: June 10, 2005 10:48 a.m. Scale: 1=1 Kriegel Xrefs:

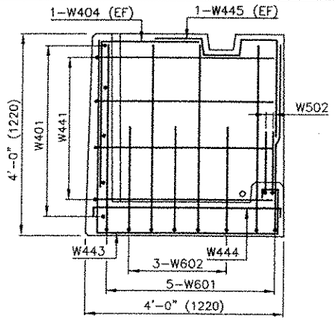

SECTION, TYPE 4F

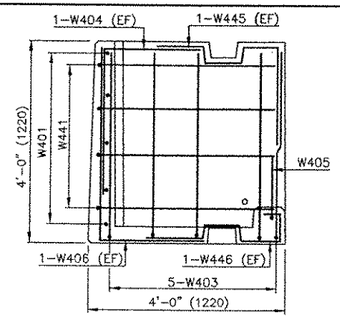

SECTION, TYPE 4S

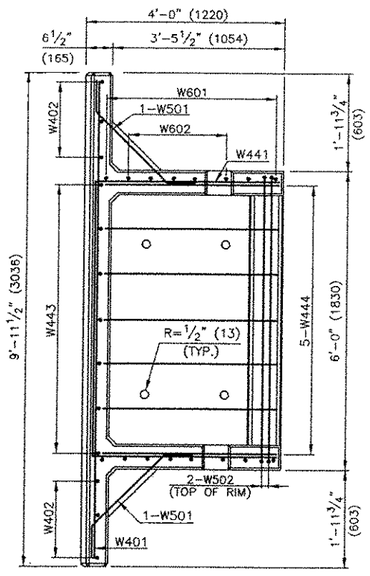

PLAN, TYPE 4F

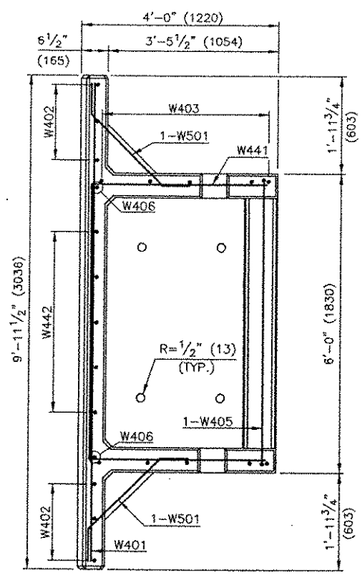

PLAN, TYPE 4S

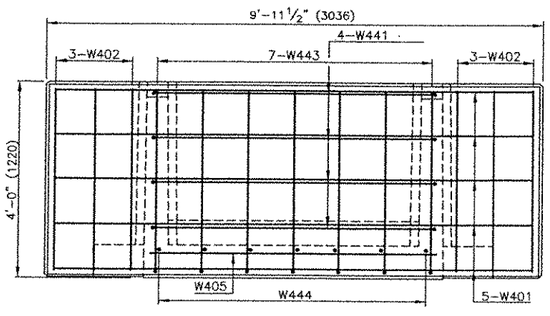

FRONT ELEVATION, TYPE 4F

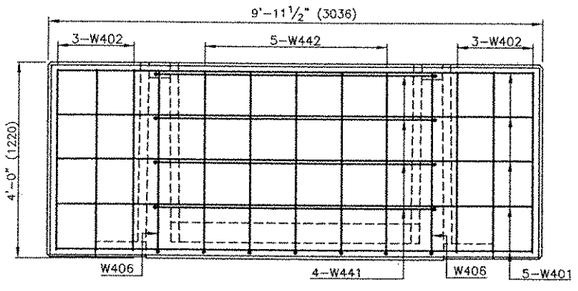

FRONT ELEVATION, TYPE 4S

REINFORCEMENT BAR SCHEDULE

MARK	NUMBER TYPE 4F	NUMBER TYPE 4S	SIZE	TYPE	LENGTH FT.	LENGTH (MM)
W401	5	5	4 (13)	STR	9'-9"	(2970)
W402	6	6	4 (13)	STR	3'-9"	(1145)
W403	—	5	4 (13)	a	13'-0"	(3963)
W404	2	2	4 (13)	b	4'-11"	(1499)
W405	—	1	4 (13)	c	7'-1"	(2159)
W406	—	2	4 (13)	d	5'-11"	(1804)
W441	4	4	4 (13)	f	12'-8"	(3860)
W442	—	5	4 (13)	g	8'-3"	(2515)
W443	7	—	4 (13)	h	9'-3"	(2820)
W444	7	—	4 (13)	i	4'-5"	(1350)
W445	2	2	4 (13)	j	6'-6"	(1982)
W446	—	2	4 (13)	k	4'-4"	(1320)
W501	2	2	5 (16)	l	3'-5"	(1042)
W502	2	—	5 (16)	m	7'-9"	(2363)
W601	5	—	6 (19)	n	13'-6"	(4115)
W602	3	—	6 (19)	o	9'-9"	(2972)

TYPE

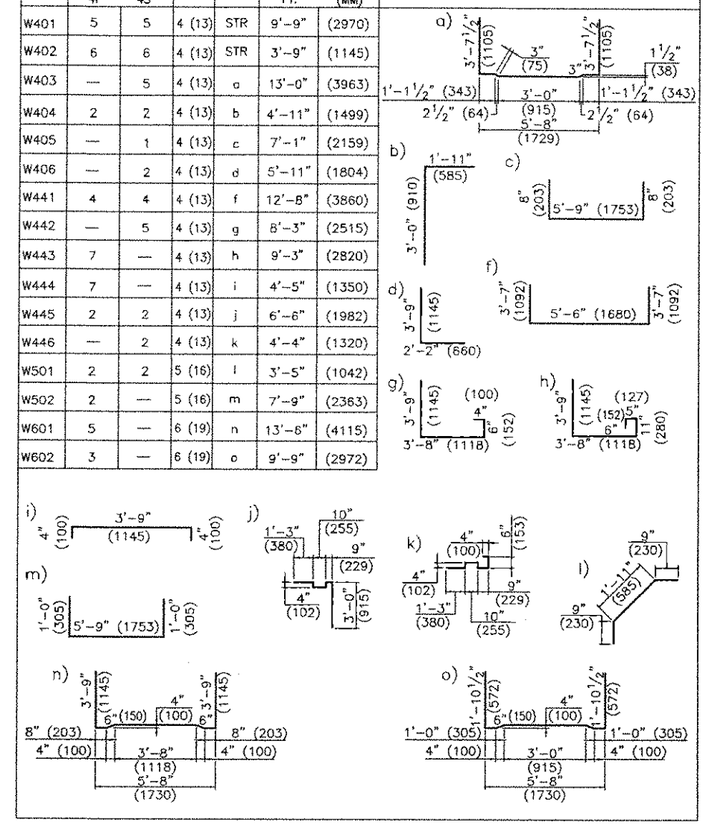

NOTES:

- FOR EVERWALL UNIT DIMENSIONS, SEE SHEET 13.
- MAXIMUM FOUNDATION PRESSURE FOR EVERWALL UNIT TYPE 4F.
  SERVICE LIMIT STATE: 3.2 TSF.
  STRENGTH LIMIT STATE: 4.0 TSF.
  ADDITIONAL REBARS W602 AND W603 SHOWN ON SHEET 25 ARE REQUIRED FOR FOUNDATION PRESSURE EXCEEDING THE ABOVE MENTIONED LIMITS.
- BAR MARKS W401 THRU W406 AND W501 ARE APPLICABLE TO ALL EVERWALL UNITS TYPES 4XX THRU TYPE 16XX.
- BAR MARKS W441 THRU W447 ARE APPLICABLE ONLY TO EVERWALL TYPES 4F, & 4S
- REBAR DESIGNATION

BAR MARK LEGEND

W446
- W — INDICATES EVERWALL
- 4 — INDICATES REBAR SIZE
- 4 — INDICATES APPLICABLE TYPE OF EVERWALL UNIT. SEE NOTE BELOW
- 46 — INDICATES REBAR NUMBER

NOTES:

0 = INDICATES BAR IS APPLICABLE TO ALL EVERWALL UNITS, TYPE 4XX THRU TYPE 16XX.
4 = INDICATES BAR IS APPLICABLE ONLY TO TYPE INDICATED

EXAMPLE:
4 = TYPE 4S, 4SM, 4F, AND 4FM
16 = TYPE 16S, AND 16F

TOTAL WEIGHT OF REINFORCEMENT:

4F–337 LBS. (153 KG)
4S–200 LBS. (91 KG)

SEP 30 2005

COMMONWEALTH OF PENNSYLVANIA
DEPARTMENT OF TRANSPORTATION

EVERWALL ABUTMENT AND RETAINING WALL SYSTEM STANDARD DRAWINGS

UNIT TYPES 4F, AND 4S

PADOT DWG # PE# 2002-021

SHEET 17 of 25

File: BARSCHED-PAGE17.dwg Date/Time: June 10, 2005 10:48 a.m. Scale: 1=1 kriegel Xrefs:

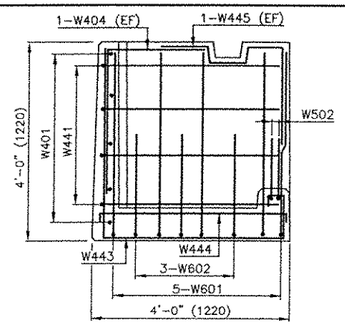

SECTION, TYPE 4FM

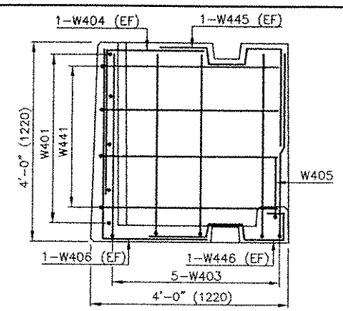

SECTION, TYPE 4SM

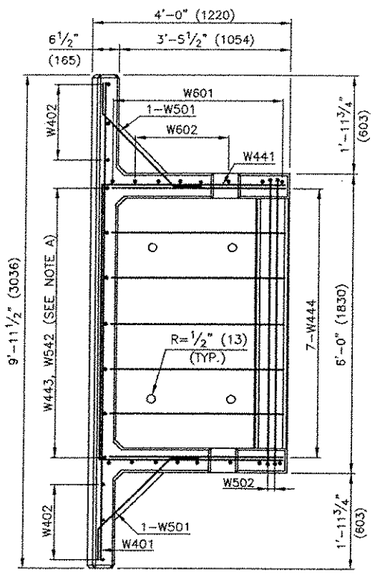

PLAN, TYPE 4FM

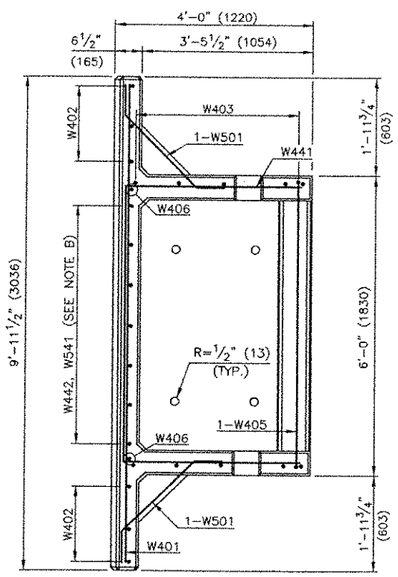

PLAN, TYPE 4SM

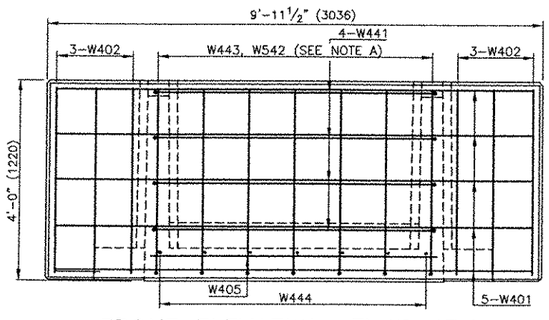

FRONT ELEVATION, TYPE 4FM

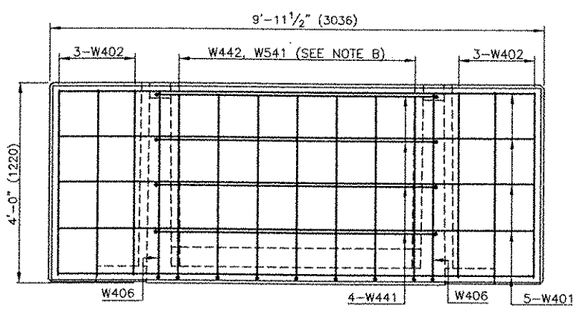

FRONT ELEVATION, TYPE 4SM

* INDICATES BARS SPECIFIC TO CERTAIN WALL HEIGHTS. SEE NOTES A & B, THIS SHEET.

NOTE A:

- USE 7-W443 FOR WALL HEIGHTS ≤ 24'-0" (7315).
- USE 7-W542 FOR WALL HEIGHTS > 24'-0" (7315) ≤ 40'-0" (12 192).
- USE 9-W542 FOR WALL HEIGHTS > 40'-0" (12 192) ≤ 55'-0" (16 764).

NOTE B:

- USE 5-W442 FOR WALL HEIGHTS ≤ 24'-0" (7315).
- USE 7-W541 FOR WALL HEIGHTS > 24'-0" (7315) ≤ 40'-0" (12 192).
- USE 9-W541 FOR WALL HEIGHTS > 40'-0" (12 192) ≤ 55'-0" (16 764).

REINFORCEMENT BAR SCHEDULE

MARK	NUMBER TYPE 4FM	NUMBER TYPE 4SM	SIZE	TYPE	LENGTH FT.	LENGTH (MM)
W401	5	5	4 (13)	STR	9'-9"	(2970)
W402	6	6	4 (13)	STR	3'-9"	(1145)
W403	—	5	4 (13)	a	13'-0"	(3963)
W404	2	2	4 (13)	b	4'-11"	(1499)
W405	—	1	4 (13)	c	7'-1"	(2159)
W406	—	2	4 (13)	d	5'-11"	(1804)
W441	4	4	4 (13)	f	12'-8"	(3860)
W442	—	5	4 (13)	g	8'-3"	(2515)
W443	7	—	4 (13)	h	9'-3"	(2820)
W444	7	—	4 (13)	i	4'-5"	(1350)
W445	2	2	4 (13)	j	6'-6"	(1982)
W446	—	2	4 (13)	k	4'-4"	(1320)
W501	2	2	5 (16)	l	3'-5"	(1042)
W502	2	—	5 (16)	m	7'-9"	(2362)
* W541	—	7 or 9	5 (16)	g	8'-3"	(2515)
* W542	7 or 9	—	5 (16)	h	9'-3"	(2820)
W601	5	—	6 (19)	n	13'-6"	(4115)
W602	3	—	6 (19)	o	9'-9"	(2972)

TYPE

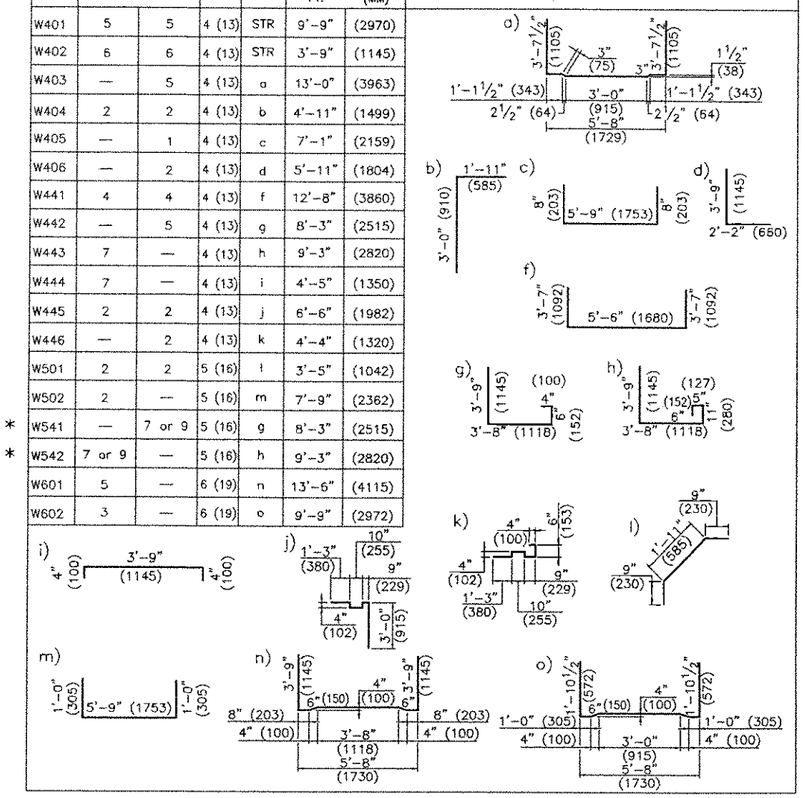

NOTES:

- FOR EVERWALL UNIT DIMENSIONS, SEE SHEET 13.
- EVERWALL TYPE 4FM AND 4SM ARE PRIMARILLY FOR CONSTR. OF M.S.E. RETAINING WALL, EXCEPT ABUTMENT.
- REBAR DESIGNATION SEE SHEET 17.
- FOR MAXIMUM DESIGN FOUNDATION PRESSURE, SEE SHEET 17.

TOTAL WEIGHT OF REINFORCEMENT:

-FOR HEIGHTS 20'-0" (6096) OR LESS
4FM-330 LBS. (150 KG)
4SM-193 LBS. (88 KG)

-FOR HEIGHTS BETWEEN 20'-0" (6096) & 40'-0" (12 192)
4FM-354 LBS. (161 KG)
4SM-226 LBS. (103 KG)

-FOR HEIGHTS BETWEEN 40'-0" (12 192) & 55'-0" (16 764)
4FM-373 LBS. (170 KG)
4SM-243 LBS. (110 KG)

SEP 30 2005

COMMONWEALTH OF PENNSYLVANIA
DEPARTMENT OF TRANSPORTATION

EVERWALL ABUTMENT AND RETAINING WALL SYSTEM
STANDARD DRAWINGS
REINFORCEMENT DETAILS FOR EVERWALL UNIT TYPES 4FM, AND 4SM

PADOT DWG # PE# 2002-021

SHEET 18 of 25

File: BARSCHED-PAGE18.dwg Date/Time: June 10, 2005 9:54 a.m. Scale: 1=1 kriegel Krefs:

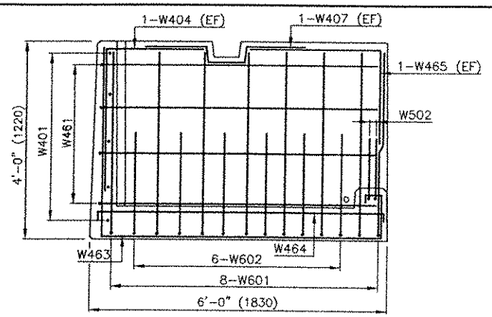

SECTION, TYPE 6F

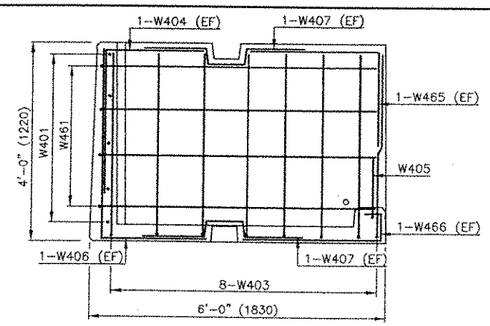

SECTION, TYPE 6S

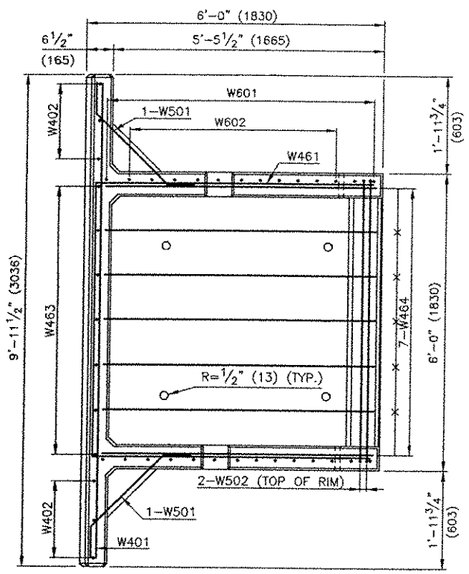

PLAN, TYPE 6F

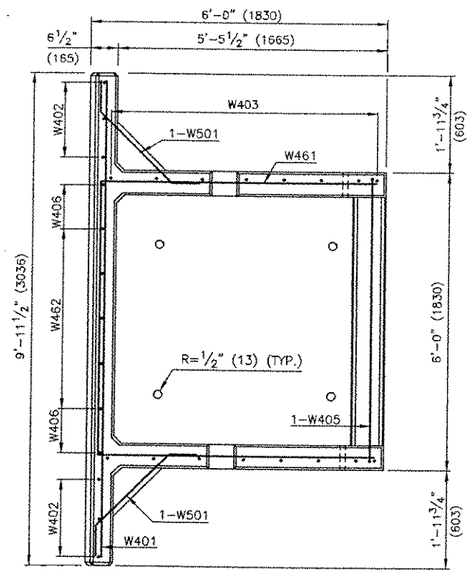

PLAN, TYPE 6S

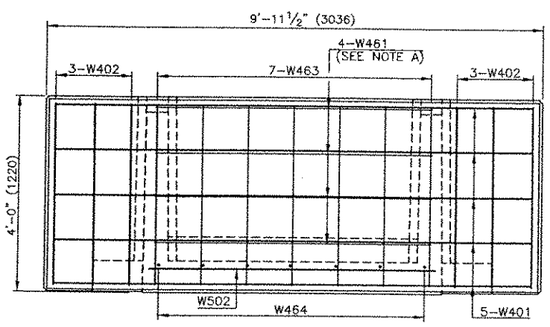

FRONT ELEVATION, TYPE 6F

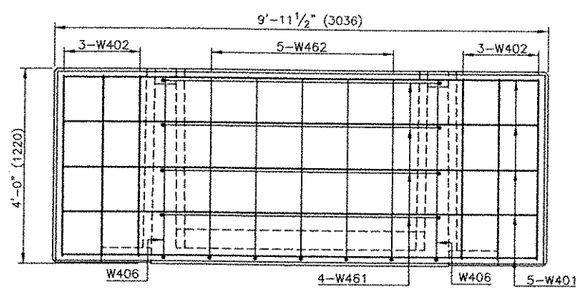

FRONT ELEVATION, TYPE 6S

REINFORCEMENT BAR SCHEDULE

MARK	NUMBER TYPE 6F	NUMBER TYPE 6S	SIZE	TYPE	LENGTH FT.	LENGTH (MM)
W401	5	5	4 (13)	STR	9'-9"	(2970)
W402	6	6	4 (13)	STR	3'-9"	(1145)
W403	—	8	4 (13)	a	13'-0"	(3963)
W404	2	2	4 (13)	b	4'-11"	(1499)
W405	—	1	4 (13)	c	7'-1"	(2159)
W406	—	2	4 (13)	d	5'-11"	(1804)
W407	2	4	4 (13)	e	4'-0"	(1220)
W461	4	4	4 (13)	f	16'-8"	(5080)
W462	—	5	4 (13)	g	10'-3"	(3125)
W463	7	—	4 (13)	h	11'-3"	(3430)
W464	7	—	4 (13)	i	6'-5"	(1956)
W465	2	2	4 (13)	j	5'-9"	(1755)
W466	—	2	4 (13)	k	3'-7"	(1092)
W501	2	2	5 (16)	l	3'-5"	(1042)
W502	2	—	5 (16)	m	7'-9"	(2363)
W601	8	—	6 (19)	n	13'-6"	(4115)
W602	6	—	6 (19)	o	9'-9"	(2972)

TYPE

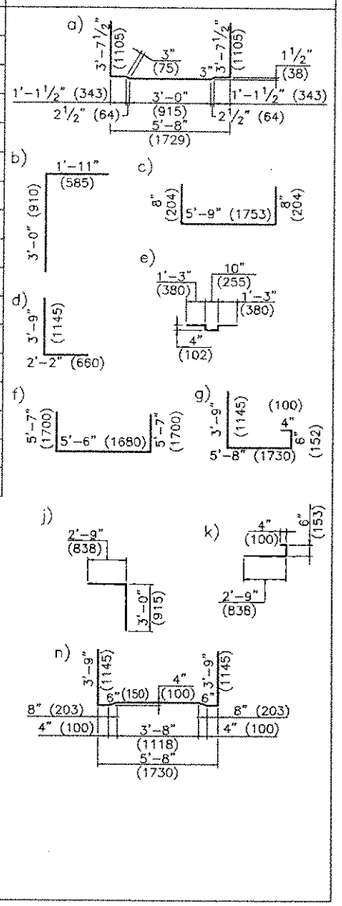

TOTAL WEIGHT OF REINFORCEMENT:

6F–468 LBS. (213 KG)
6S–246 LBS. (112 KG)

NOTES:

- FOR EVERWALL UNIT DIMENSIONS, SEE SHEET 13.
- BAR MARKS W401 THRU W407 AND W501 THRU W502 ARE APPLICABLE TO ALL EVERWALL UNITS TYPES 4XX THRU TYPE 16XX.
- BAR MARKS W461 THRU W466 ARE APPLICABLE ONLY TO EVERWALL TYPES 6F, & 6S.
- FOR REBAR DESIGNATIONS SEE SHEET 17.
- FOR MAXIMUM DESIGN FOUNDATION PRESSURE, SEE SHEET 17.
- FOR EVERWALL UNIT TYPE 6ST WHICH IS PLACED DIRECTLY BENEATH THE ABUTMENT FOOTING, SUBSTITUTE REBAR MARK W403 WITH NO. 6 REINFORCING BAR USING THE SAME TYPE a. OTHER BARS ARE IDENTICAL TO THOSE FOUND IN EVERWALL UNIT TYPE 6S EXCEPT THE VERTICAL LEG OF 3'-7½" WHICH SHALL BE REVISED ACCORDING TO THE VERTICAL GEOMETRY DIMENSION.

SEP 30 2005

COMMONWEALTH OF PENNSYLVANIA
DEPARTMENT OF TRANSPORTATION

EVERWALL ABUTMENT AND RETAINING WALL SYSTEM
STANDARD DRAWINGS
REINFORCEMENT DETAILS FOR EVERWALL UNIT TYPES 6F AND 6S

PADOT DWG # PE# 2002-021

SHEET 19 of 25

File: BARSCHED-PAGE19.dwg Date/Time: June 10, 2005 9:53 a.m. Scale: 1=1 kriegel Xrefs:

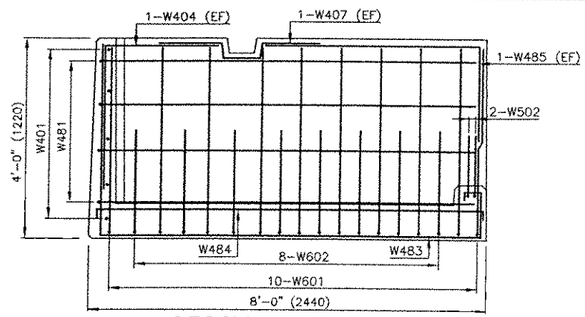

SECTION, TYPE 8F

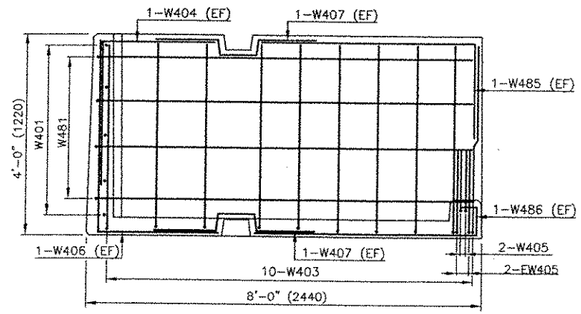

SECTION, TYPE 8S

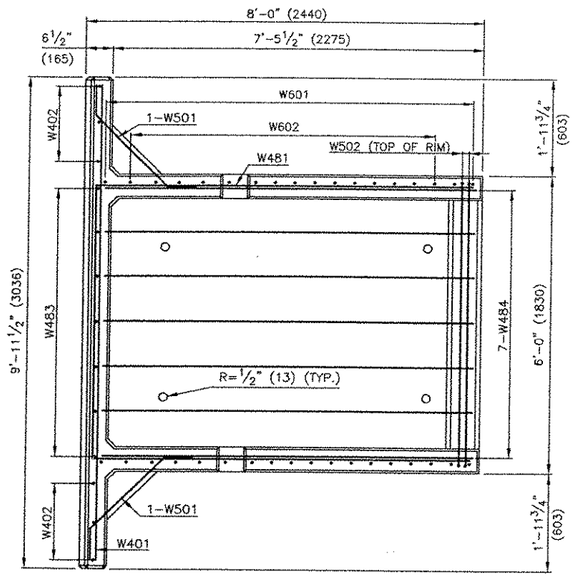

PLAN, TYPE 8F

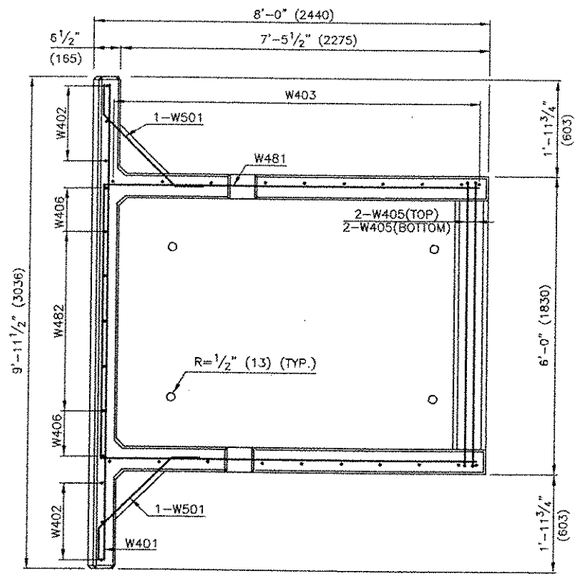

PLAN, TYPE 8S

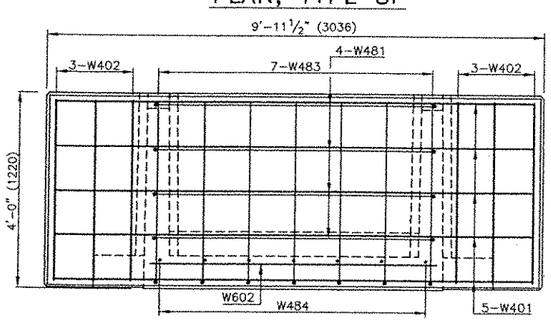

FRONT ELEVATION, TYPE 8F

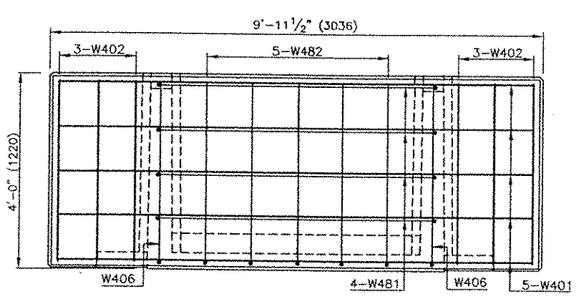

FRONT ELEVATION, TYPE 8S

REINFORCEMENT BAR SCHEDULE

MARK	NUMBER TYPE 8F	NUMBER TYPE 8S	SIZE	TYPE	LENGTH FT.	LENGTH (MM)
W401	5	5	4 (13)	STR	9'-9"	(2970)
W402	6	6	4 (13)	STR	3'-9"	(1145)
W403	—	10	4 (13)	a	13'-0"	(3963)
W404	2	2	4 (13)	b	4'-11"	(1499)
W405	—	4	4 (13)	c	7'-1"	(2159)
W406	—	2	4 (13)	d	5'-11"	(1804)
W407	2	4	4 (13)	e	4'-0"	(1220)
W481	4	4	4 (13)	f	20'-8"	(6300)
W482	—	5	4 (13)	g	12'-3"	(3735)
W483	7	—	4 (13)	h	13'-3"	(4040)
W484	7	—	4 (13)	i	8'-5"	(2565)
W485	2	2	4 (13)	j	7'-9"	(2362)
W486	—	2	4 (13)	k	5'-7"	(1702)
W501	2	2	5 (16)	l	3'-5"	(1042)
W502	2	—	5 (16)	m	7'-9"	(2363)
W601	10	—	6 (19)	n	13'-6"	(4115)
W602	8	—	6 (19)	o	9'-9"	(2972)

TYPE

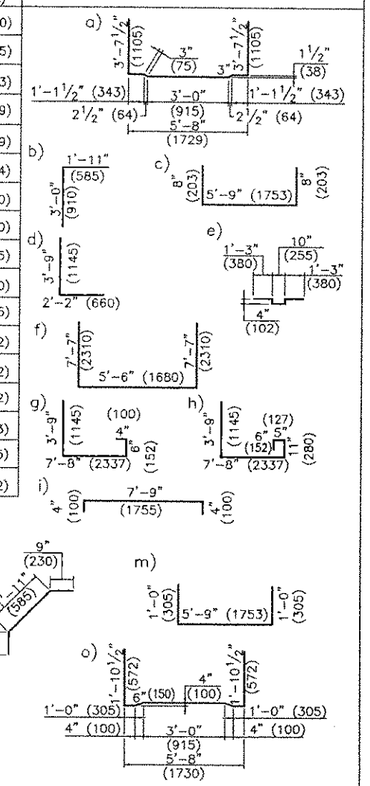

TOTAL WEIGHT OF REINFORCEMENT:

8F–570 LBS. (259 KG)
8S–300 LBS. (137 KG)

NOTES:

- FOR EVERWALL UNIT DIMENSIONS, SEE SHEET 13.
- BAR MARKS W401 THRU W407 ARE APPLICABLE TO ALL EVERWALL UNITS, TYPES 4XX THRU TYPE 16XX.
- BAR MARKS W501, W601 AND W602 ARE APPLICABLE TO ALL EVERWALL UNITS, TYPES 8XX THRU TYPE 16XX.
- BAR MARKS W481 THRU W486 ARE APPLICABLE ONLY TO EVERWALL TYPES 8F, & 8S.
- FOR REBAR DESIGNATIONS SEE SHEET 17.
- FOR MAXIMUM DESIGN FOUNDATION PRESSURE, SEE SHEET 17.

SEP 30 2005

COMMONWEALTH OF PENNSYLVANIA
DEPARTMENT OF TRANSPORTATION

EVERWALL ABUTMENT AND RETAINING WALL SYSTEM
STANDARD DRAWINGS
REINFORCEMENT DETAILS FOR EVERWALL UNIT TYPES 8F AND 8S

PADOT DWG # PE# 2002-021

SHEET 20 of 25

File: BARSCHED-PAGE21.dwg Date/Time: June 10, 2005 9:51 a.m. Scale: 1=1 kriegel Xrefs:

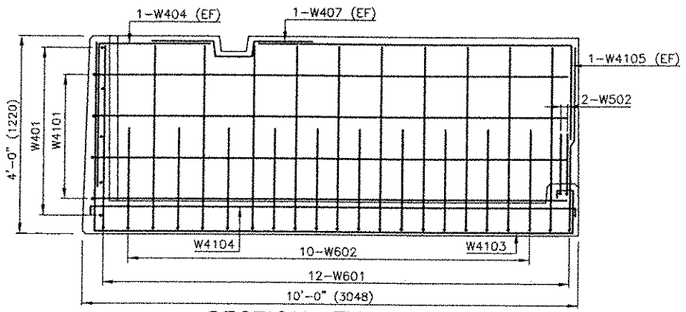

SECTION, TYPE 10F

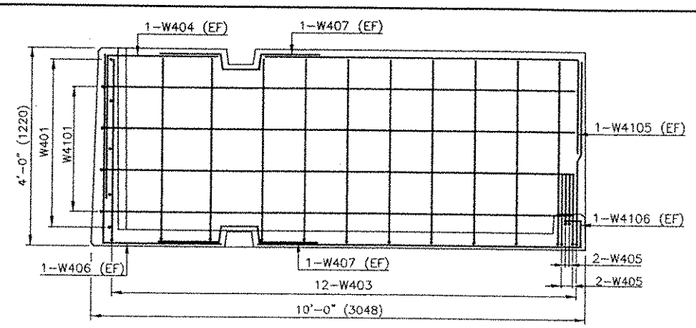

SECTION, TYPE 10S

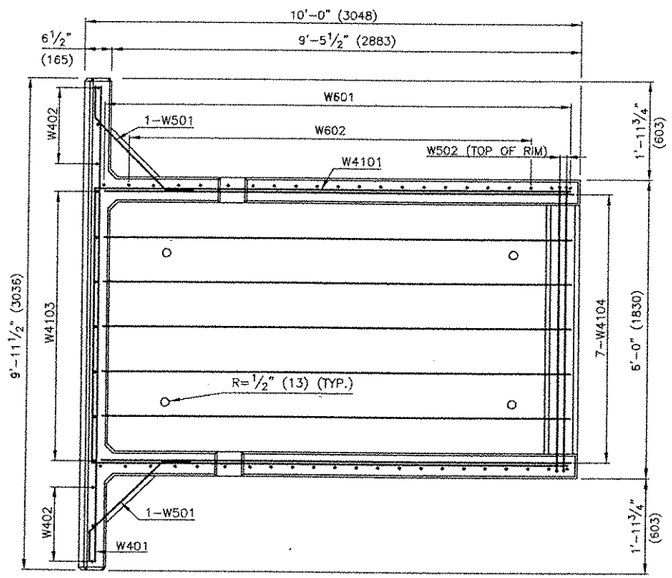

PLAN, TYPE 10F

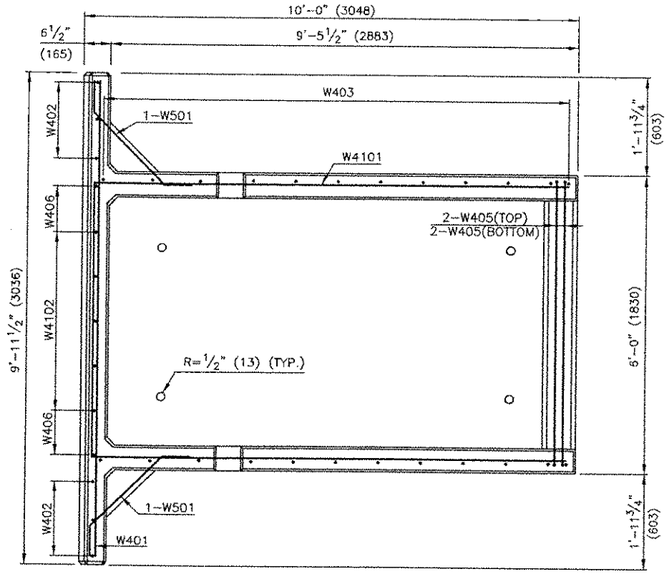

PLAN, TYPE 10S

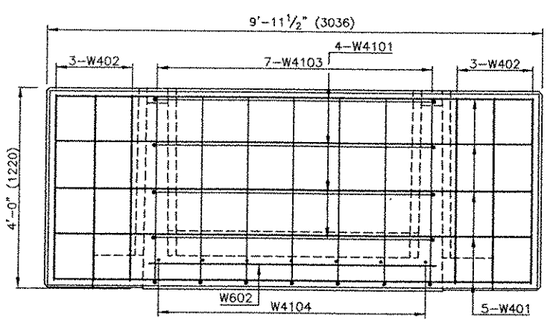

FRONT ELEVATION, TYPE 10F

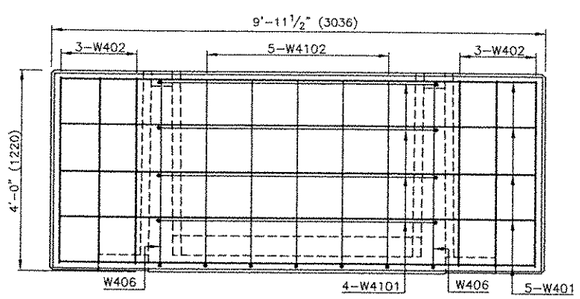

FRONT ELEVATION, TYPE 10S

REINFORCEMENT BAR SCHEDULE

MARK	NUMBER TYPE 10F	NUMBER TYPE 10S	SIZE	TYPE	LENGTH FT.	LENGTH (MM)
W401	5	5	4 (13)	STR	9'-9"	(2970)
W402	6	6	4 (13)	STR	3'-9"	(1145)
W403	—	12	4 (13)	a	13'-0"	(3963)
W404	2	2	4 (13)	b	4'-11"	(1499)
W405	—	4	4 (13)	c	7'-1"	(2159)
W406	—	2	4 (13)	d	5'-11"	(1804)
W407	2	4	4 (13)	e	4'-0"	(1220)
W4101	4	4	4 (13)	f	24'-8"	(7520)
W4102	—	3	4 (13)	g	14'-3"	(4345)
W4103	7	—	4 (13)	h	15'-3"	(4648)
W4104	7	—	4 (13)	i	10'-5"	(3175)
W4105	2	2	4 (13)	j	9'-9"	(2972)
W4106	—	2	4 (13)	k	7'-7"	(2311)
W501	2	2	5 (16)	l	3'-5"	(1042)
W502	2	—	5 (16)	m	7'-9"	(2363)
W601	12	—	6 (19)	n	13'-6"	(4115)
W602	10	—	6 (19)	o	9'-9"	(2972)

TYPE

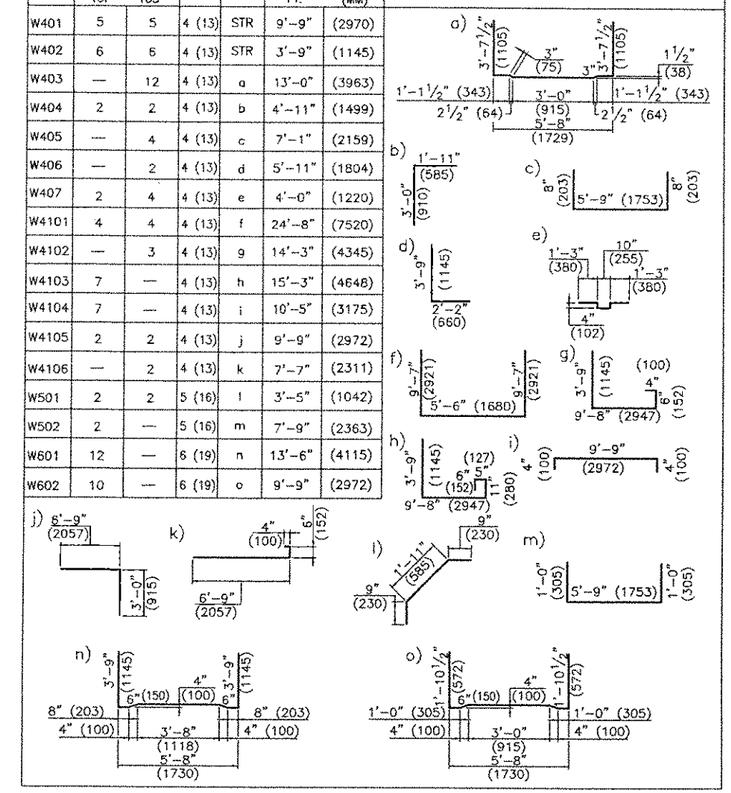

TOTAL WEIGHT OF REINFORCEMENT:

10F-672 LBS. (305 KG)
10S-321 LBS. (146 KG)

NOTES:

- FOR EVERWALL UNIT DIMENSIONS, SEE SHEET 13.
- BAR MARKS W401 THRU W407 ARE APPLICABLE TO ALL EVERWALL UNITS, TYPES 4XX THRU TYPE 16XX.
- BAR MARKS W501, W601 AND W602 ARE APPLICABLE TO ALL EVERWALL UNITS, TYPES 8XX THRU TYPE 16XX.
- BAR MARKS W4101 THRU W4105 ARE APPLICABLE ONLY TO EVERWALL TYPES 10F, & 10S.
- FOR REBAR DESIGNATIONS SEE SHEET 17.
- FOR MAXIMUM DESIGN FOUNDATION PRESSURE, SEE SHEET 17.

SEP 30 2005

COMMONWEALTH OF PENNSYLVANIA
DEPARTMENT OF TRANSPORTATION

EVERWALL ABUTMENT AND RETAINING WALL SYSTEM
STANDARD DRAWINGS
REINFORCEMENT DETAILS FOR EVERWALL UNIT TYPES 10F AND 10S

PADOT DWG # PE# 2002-021

SHEET 21 of 25

File: BARSCHED-PAGE22.dwg Date/Time: June 10, 2005 9:50 a.m. Scale: 1=1 kriegel Xrefs:

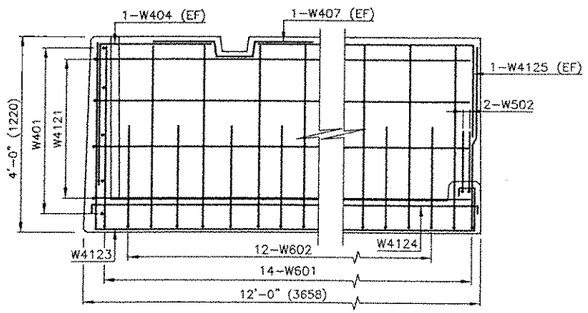

SECTION, TYPE 12F

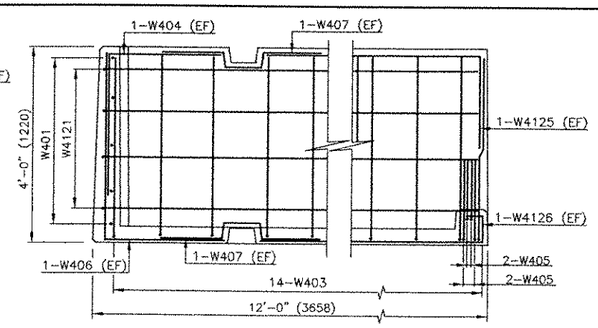

SECTION, TYPE 12S

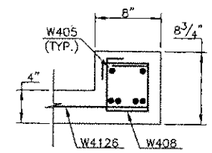

SECTION A-A

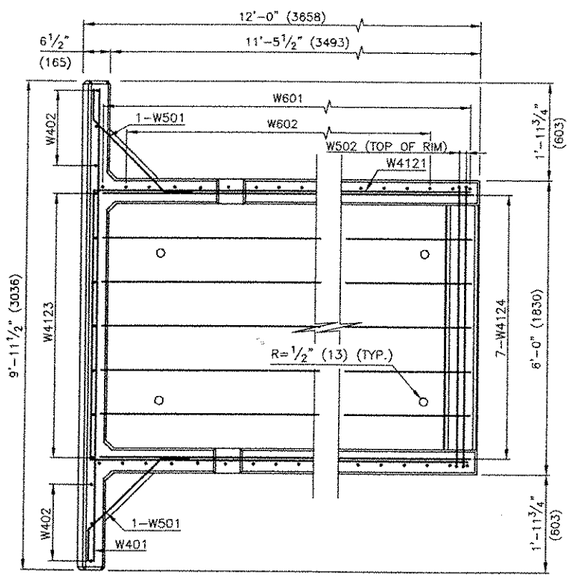

PLAN, TYPE 12F

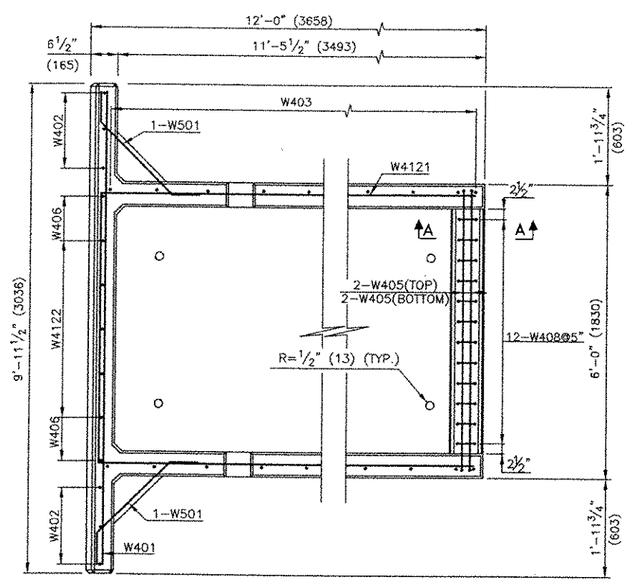

PLAN, TYPE 12S

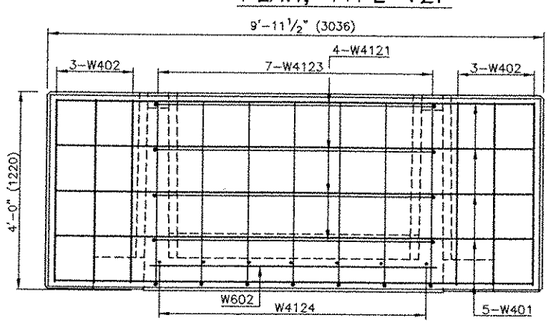

FRONT ELEVATION, TYPE 12F

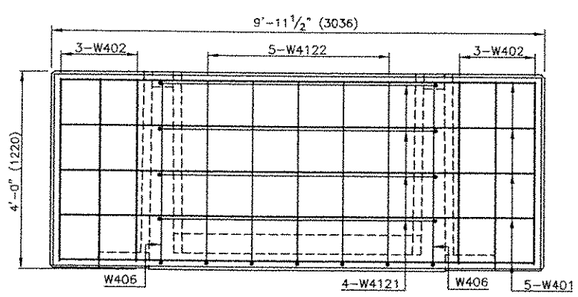

FRONT ELEVATION, TYPE 12S

REINFORCEMENT BAR SCHEDULE

MARK	NUMBER TYPE 12F	NUMBER TYPE 12S	SIZE	TYPE	LENGTH FT.	LENGTH (MM)
W401	5	5	4 (13)	STR	9'-9"	(2970)
W402	6	6	4 (13)	STR	3'-9"	(1145)
W403	—	14	4 (13)	a	13'-0"	(3963)
W404	2	2	4 (13)	b	4'-11"	(1499)
W405	—	4	4 (13)	c	7'-1"	(2159)
W406	—	2	4 (13)	d	5'-11"	(1804)
W407	2	4	4 (13)	e	4'-0"	(1220)
W408	—	12	4 (13)	p	2'-1½"	(650)
W4121	4	4	4 (13)	f	28'-8"	(8738)
W4122	—	3	4 (13)	g	16'-3"	(4953)
W4123	7	—	4 (13)	h	17'-3"	(5258)
W4124	7	—	4 (13)	i	12'-5"	(3785)
W4125	2	2	4 (13)	j	11'-9"	(3581)
W4126	—	2	4 (13)	k	9'-7"	(2921)
W501	2	2	5 (16)	l	3'-5"	(1042)
W502	2	—	5 (16)	m	7'-9"	(2363)
W601	14	—	6 (19)	n	13'-6"	(4115)
W602	12	—	6 (19)	o	9'-9"	(2972)

TYPE

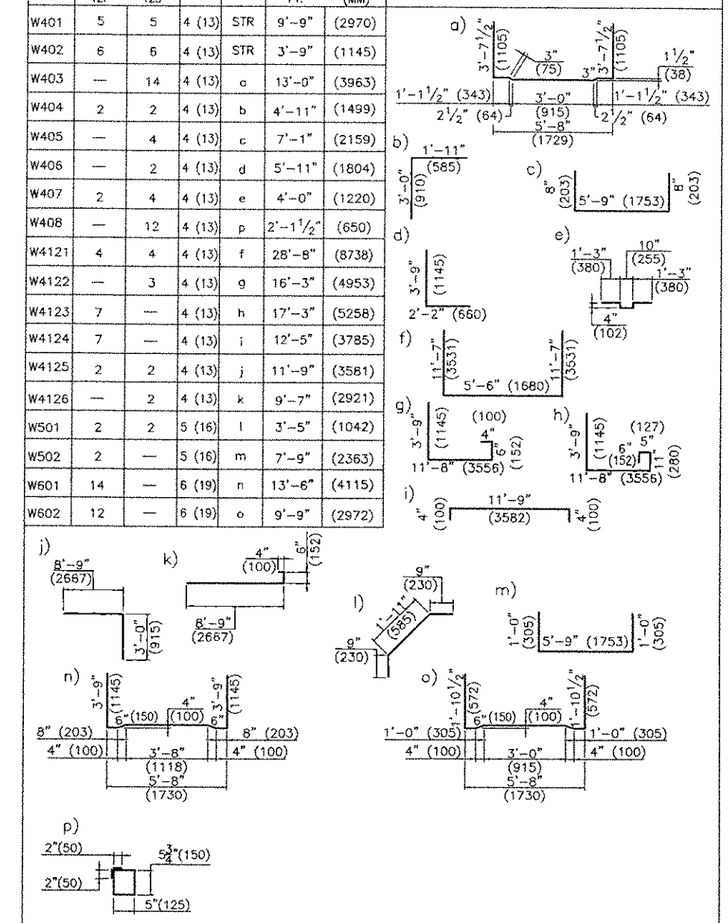

TOTAL WEIGHT OF REINFORCEMENT:

12F-774 LBS. (352 KG)
12S-370 LBS. (168 KG)

NOTES:

- FOR EVERWALL UNIT DIMENSIONS, SEE SHEET 13.
- BAR MARKS W401 THRU W407 ARE APPLICABLE TO ALL EVERWALL UNITS, TYPES 4XX THRU TYPE 16XX.
- BAR MARKS W501, W601 AND W602 ARE APPLICABLE TO ALL EVERWALL UNITS, TYPES 8XX THRU TYPE 16XX.
- BAR MARKS W4121 THRU W4126 ARE APPLICABLE ONLY TO EVERWALL TYPES 12F, & 12S.
- FOR REBAR DESIGNATIONS SEE SHEET 17.
- FOR MAXIMUM DESIGN FOUNDATION PRESSURE, SEE SHEET 17.

SEP 30 2005

COMMONWEALTH OF PENNSYLVANIA
DEPARTMENT OF TRANSPORTATION

EVERWALL ABUTMENT AND RETAINING WALL SYSTEM
STANDARD DRAWINGS
REINFORCEMENT DETAILS FOR EVERWALL UNIT TYPES 12F AND 12S

PADOT DWG # PE# 2002-021

SHEET 22 of 25

File: BARSCHED-PAGE23.dwg Date/Time: June 10, 2005 9:47 a.m. Scale: 1=1 kriegel Xrefs:

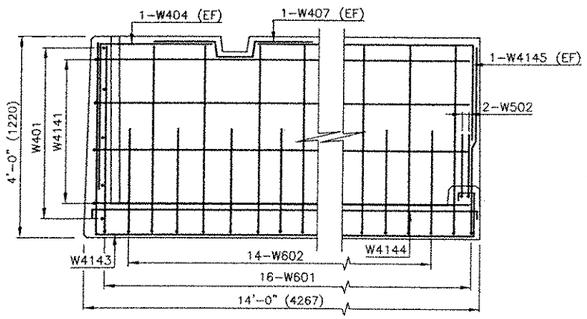

SECTION, TYPE 14F

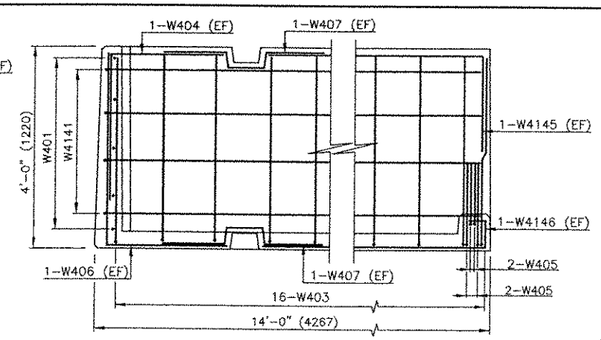

SECTION, TYPE 14S

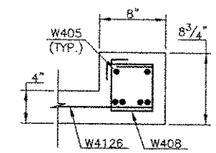

SECTION A-A

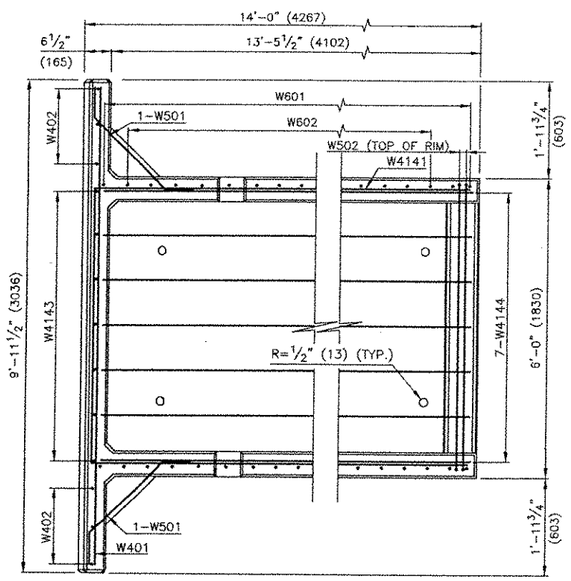

PLAN, TYPE 14F

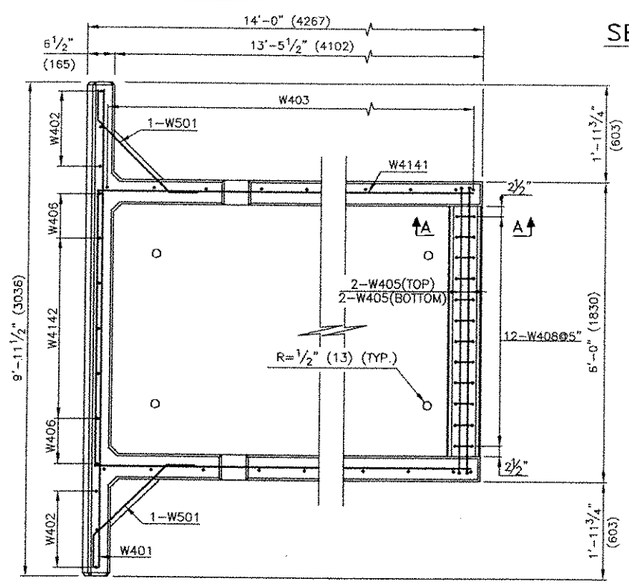

PLAN, TYPE 14S

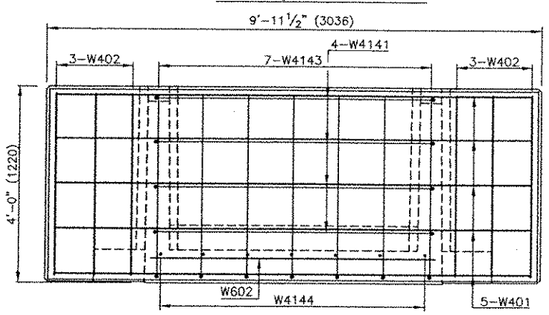

FRONT ELEVATION, TYPE 14F

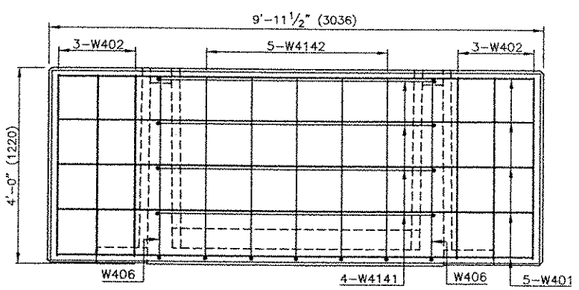

FRONT ELEVATION, TYPE 14S

REINFORCEMENT BAR SCHEDULE

MARK	NUMBER TYPE 14F	NUMBER TYPE 14S	SIZE	TYPE	LENGTH FT.	LENGTH (MM)
W401	5	5	4 (13)	STR	9'-9"	(2970)
W402	6	6	4 (13)	STR	3'-9"	(1145)
W403	—	16	4 (13)	a	13'-0"	(3963)
W404	2	2	4 (13)	b	4'-11"	(1499)
W405	—	2	4 (13)	c	7'-1"	(2159)
W406	—	2	4 (13)	d	5'-11"	(1804)
W407	2	4	4 (13)	e	4'-0"	(1220)
W408	—	12	4 (13)	p	2'-1½"	(650)
W4141	4	4	4 (13)	f	32'-8"	(9957)
W4142	—	5	4 (13)	g	18'-3"	(5563)
W4143	7	—	4 (13)	h	19'-3"	(5868)
W4144	7	—	4 (13)	i	14'-5"	(4395)
W4145	2	2	4 (13)	j	13'-9"	(4191)
W4146	—	2	4 (13)	k	11'-7"	(3531)
W501	2	2	5 (16)	l	3'-5"	(1042)
W502	2	—	5 (16)	m	7'-9"	(2363)
W601	16	—	6 (19)	n	13'-6"	(4115)
W602	14	—	6 (19)	o	9'-9"	(2972)

TYPE

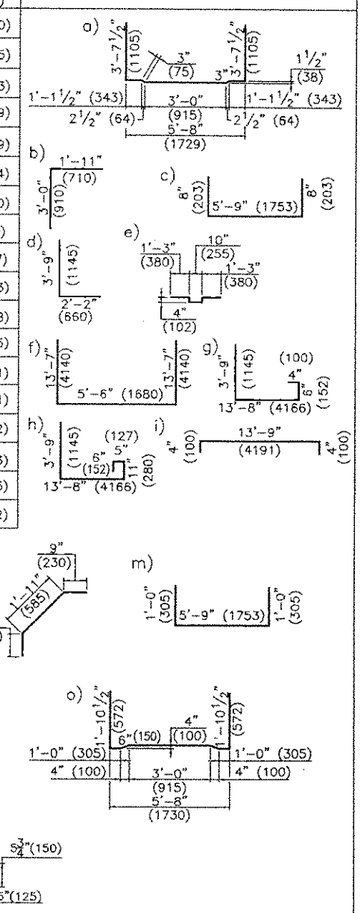

TOTAL WEIGHT OF REINFORCEMENT:

14F-876 LBS. (398 KG)
14S-422 LBS. (192 KG)

NOTES:

- FOR EVERWALL UNIT DIMENSIONS, SEE SHEET 13.
- BAR MARKS W401 THRU W407 ARE APPLICABLE TO ALL EVERWALL UNITS, TYPES 4XX THRU TYPE 16XX.
- BAR MARKS W501, W601 AND W602 ARE APPLICABLE TO ALL EVERWALL UNITS, TYPES 8XX THRU TYPE 16XX.
- BAR MARKS W4141 THRU W4146 ARE APPLICABLE ONLY TO EVERWALL TYPES 14F, & 14S.
- FOR REBAR DESIGNATIONS SEE SHEET 17.
- FOR MAXIMUM DESIGN FOUNDATION PRESSURE, SEE SHEET 17.

SEP 30 2005

COMMONWEALTH OF PENNSYLVANIA
DEPARTMENT OF TRANSPORTATION

EVERWALL ABUTMENT AND RETAINING WALL SYSTEM STANDARD DRAWINGS

REINFORCEMENT DETAILS FOR EVERWALL UNIT TYPES 14F AND 14S

PADOT DWG # PE# 2002-021

SHEET 23 of 25

File: BARSCHED-PAGE24.dwg Date/Time: June 10, 2005 9:46 a.m. Scale: 1=1 kriegel Xrefs:

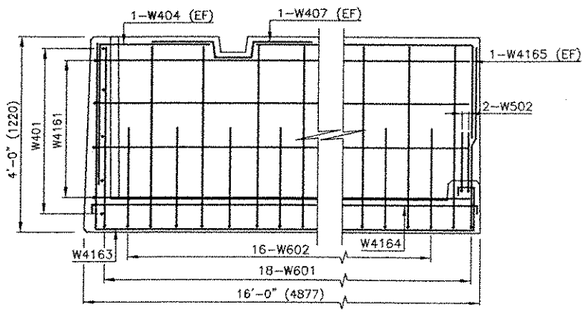

SECTION, TYPE 16F

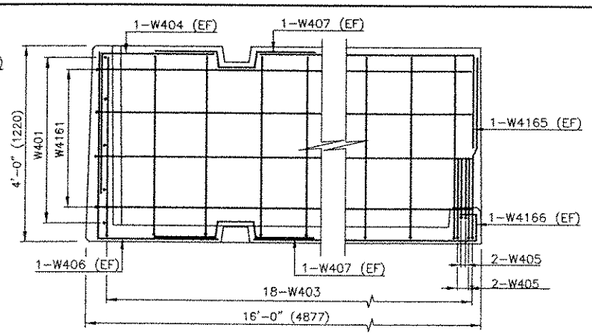

SECTION, TYPE 16S

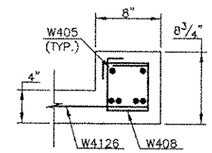

SECTION A-A

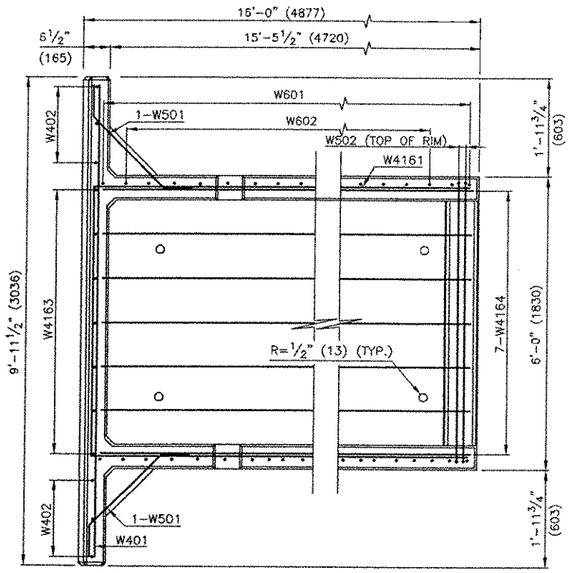

PLAN, TYPE 16F

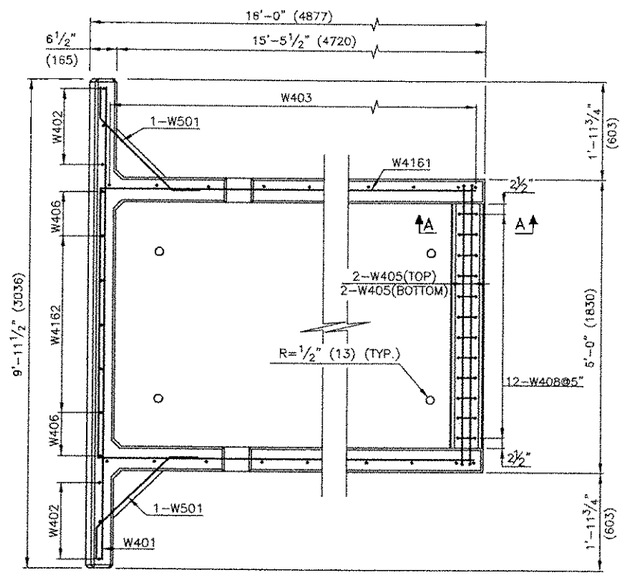

PLAN, TYPE 16S

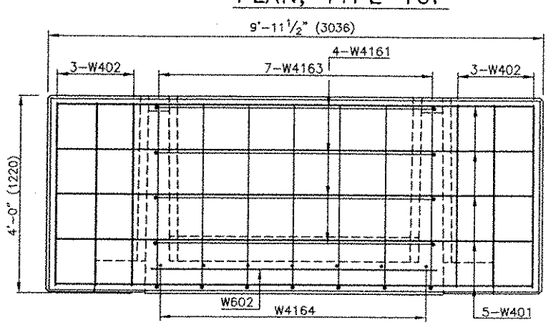

FRONT ELEVATION, TYPE 16F

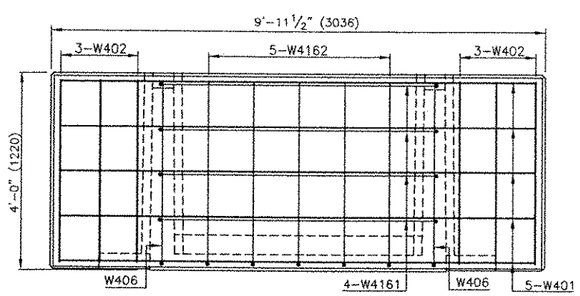

FRONT ELEVATION, TYPE 16S

REINFORCEMENT BAR SCHEDULE

MARK	NUMBER TYPE 16F	NUMBER TYPE 16S	SIZE	TYPE	LENGTH FT.	LENGTH (MM)
W401	5	5	4 (13)	STR	9'-9"	(2970)
W402	6	6	4 (13)	STR	3'-9"	(1145)
W403	—	18	4 (13)	a	13'-0"	(3963)
W404	2	2	4 (13)	b	4'-11"	(1499)
W405	—	2	4 (13)	c	7'-1"	(2159)
W406	—	2	4 (13)	d	5'-11"	(1804)
W407	2	4	4 (13)	e	4'-0"	(1220)
W408	—	12	4 (13)	p	2'-1½"	(650)
W4161	4	4	4 (13)	f	36'-8"	(11 176)
W4162	—	5	4 (13)	g	20'-3"	(6172)
W4163	7	—	4 (13)	h	21'-3"	(6480)
W4164	7	—	4 (13)	i	16'-5"	(5005)
W4165	2	2	4 (13)	j	15'-9"	(4800)
W4166	—	2	4 (13)	k	13'-7"	(4140)
W501	2	2	5 (16)	l	3'-5"	(1042)
W502	2	—	5 (16)	m	7'-9"	(2363)
W601	18	—	6 (19)	n	13'-6"	(4115)
W602	16	—	6 (19)	o	9'-9"	(2972)

TYPE

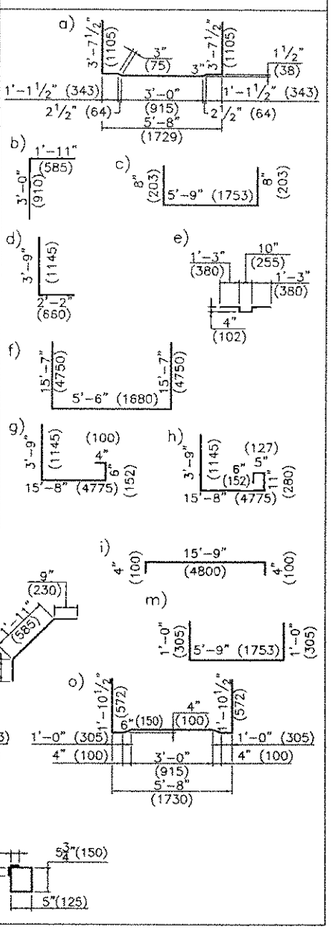

TOTAL WEIGHT OF REINFORCEMENT:

16F-978 LBS. (444 KG)
16S-462 LBS. (210 KG)

NOTES:

- FOR EVERWALL UNIT DIMENSIONS, SEE SHEET 13.
- BAR MARKS W401 THRU W407 ARE APPLICABLE TO ALL EVERWALL UNITS, TYPES 4XX THRU TYPE 16XX.
- BAR MARKS W501, W601 AND W602 ARE APPLICABLE TO ALL EVERWALL UNITS, TYPES 8XX THRU TYPE 16XX.
- BAR MARKS W4161 THRU W4166 ARE APPLICABLE ONLY TO EVERWALL TYPES 16F, & 16S.
- FOR REBAR DESIGNATIONS SEE SHEET 17.
- FOR MAXIMUM DESIGN FOUNDATION PRESSURE, SEE SHEET 17.

SEP 30 2005

COMMONWEALTH OF PENNSYLVANIA
DEPARTMENT OF TRANSPORTATION

EVERWALL ABUTMENT AND RETAINING WALL SYSTEM
STANDARD DRAWINGS
REINFORCEMENT DETAILS FOR EVERWALL UNIT TYPES 16F AND 16S

PADOT DWG # PE# 2002-D21

SHEET 24 of 25

File: BARSCHED-PAGE25.dwg Date/Time: June 10, 2005 9:45 a.m. Scale: 1=1 kriegel Xrefs:

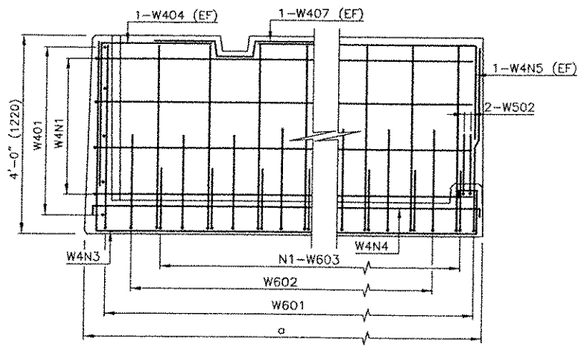

SECTION, TYPE 4F-16F, SPECIAL TYPE I

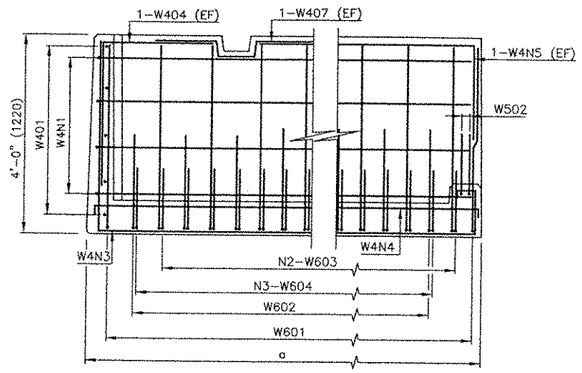

SECTION, TYPE 4F-16F, SPECIAL TYPE II

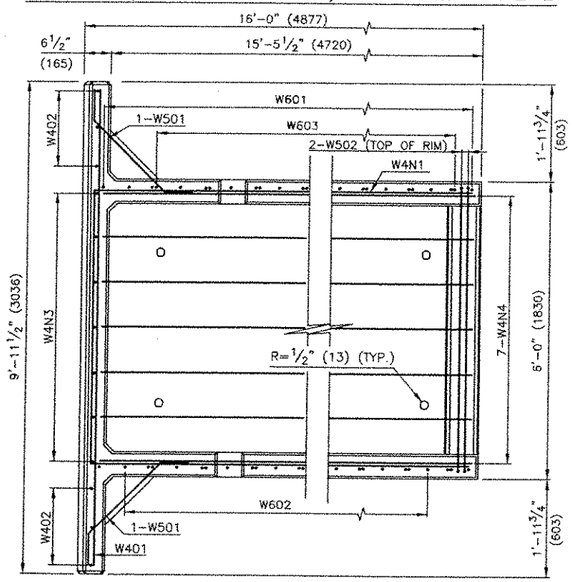

PLAN, TYPE 4F-16F, SPECIAL TYPE I

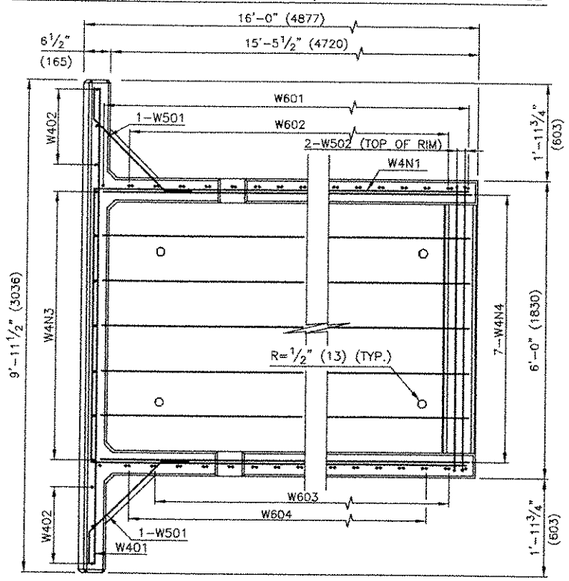

PLAN, TYPE 4F-16F, SPECIAL TYPE II

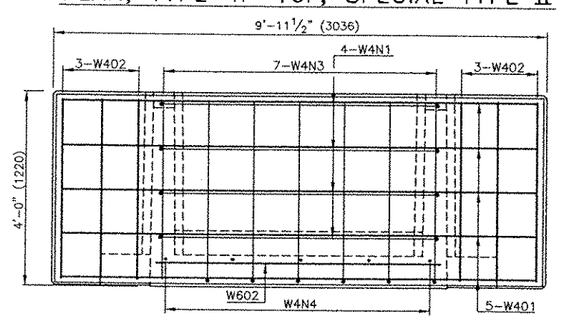

FRONT ELEVATION, TYPE 4F-16F, SPECIAL TYPE I & II

ADDITIONAL REINFORCING REQUIRED FOR BOTTOM SLAB OF EVERWALL FOUNDATION UNIT, SPECIAL

MARK	NUM.	SPECIAL TYPE I 4F	6F	8F	10F	12F	14F	16F	SIZE	TYPE	LENGTH FT.	(MM)
W603	N1	3	6	8	10	12	14	16	6 (19)	P	8'-4"	(2540)
a		4'-0"	6'-0"	8'-0"	10'-0"	12'-0"	14'-0"	16'-0"				

MARK	NUM.	SPECIAL TYPE II 4F	6F	8F	10F	12F	14F	16F	SIZE	TYPE	LENGTH FT.	(MM)
W603	N2	3	6	8	10	12	14	16	6 (19)	P	8'-4"	(2540)
W604	N3	3	6	8	10	12	14	16	6 (19)	Q	8'-4"	(2540)
a		4'-0"	6'-0"	8'-0"	10'-0"	12'-0"	14'-0"	16'-0"				

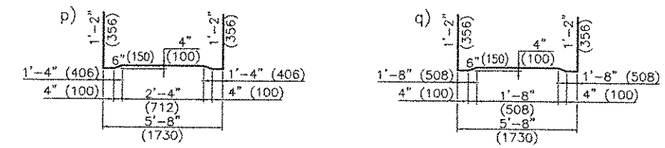

NOTES FOR REINFORCEMENT BAR SCHEDULE:

- FOR OTHER REINFORCEMENT BARS TYPE, SIZE, LENGTH AND NUMBER OF REBAR REQUIRED FOR MARKS, W401, W402, W404, W407, W501, W502, W601, W602, AND W4N1-W4N5, SEE THE FOLLOWING SHEETS.
  TYPE 4F - SHEET 17, TYPE 4FM - SHEET 18, TYPE 6F - SHEET 19, TYPE 8F - SHEET 20, TYPE 10F - SHEET 21, TYPE 12F - SHEET 22, TYPE 14F - SHEET 23, AND TYPE 16F - SHEET 24.
- THE "N" IN REBAR W4N1 THROUGH W4N5 REPRESENTS EVERWALL TYPE N FOUNDATION UNIT. FOR EXAMPLE, W4N2 IS FOR EVERWALL TYPE 8F AND REPRESENTS W482. FOR TYPE, SIZE, LENGTH, AND NUMBER OF REBAR SEE SHEETS LISTED IN ABOVE BULLET.

NOTES:

- FOR EVERWALL UNIT DIMENSIONS, SEE SHEET 13.
- MAXIMUM DESIGN FOUNDATION PRESSURE FOR EVERWALL UNIT TYPE 4F-16F, SPECIAL.

	TYPE I	TYPE II
SERVICE LIMIT STATE:	4.4 TSF	5.6 TSF
STRENGTH LIMIT STATE:	5.5 TSF	7.0 TSF

- FOR FOUNDATION PRESSURE EXCEDING THE ABOVE MENTIONED LIMITS, THE FOLLOWING OPTIONS ARE RECOMMENDED.
  a) DESIGN THE CLASS A CEMENT CONCRETE FOOTING PLACED BENEATH THE EVERWALL UNIT TYPE 4F-16F, SPECIAL, TO MEET THE APRROVED FACTORED BEARING RESISTANCE.
  -OR-
  b) INCREASE THE BOTTOM SLAB THICKNESS OF EVERWALL UNIT TYPE 4F-16F, SPECIAL, BASED ON THE SPECIFICATIONS INDICATED IN SHEET 1.

SEP 30 2005

COMMONWEALTH OF PENNSYLVANIA
DEPARTMENT OF TRANSPORTATION

EVERWALL ABUTMENT AND RETAINING WALL SYSTEM
STANDARD DRAWINGS
REINFORCEMENT DETAILS FOR EVERWALL UNIT TYPES 4F-16F, SPECIAL

PADOT DWG # PE# 2002-D21

File: BARSCHED-PAGE26.dwg Date/Time: June 10, 2005 9:43 a.m. Scale: 1=1 kriegel Xrefs:

Product:

FADDIS Concrete Products
Temporary Concrete Single Face Barrier Structure Mounted
Shop Drawing
PENNDOT Dwg 06-601-BQAD

Approval Date:	**Initiated By SOL:**
March 8, 2006	Not Applicable

Application/Use:

Preapproved shop drawing for the manufacture of temporary concrete barriers in accordance with PENNDOT Standard Drawing BC-719M, Temporary Concrete Single Face Barrier Structure Mounted by FADDIS Concrete Products of Downington, PA 19335.

Specifications:

None.

Standard Drawing:

Temporary Concrete Single Face Barrier Structure Mounted
Shop Drawing
PENNDOT Drawing 06-601-BQAD (dated March 8, 2006).
This drawing can be used as Standard approved shop drawing for your shop drawing approval.

Comment:

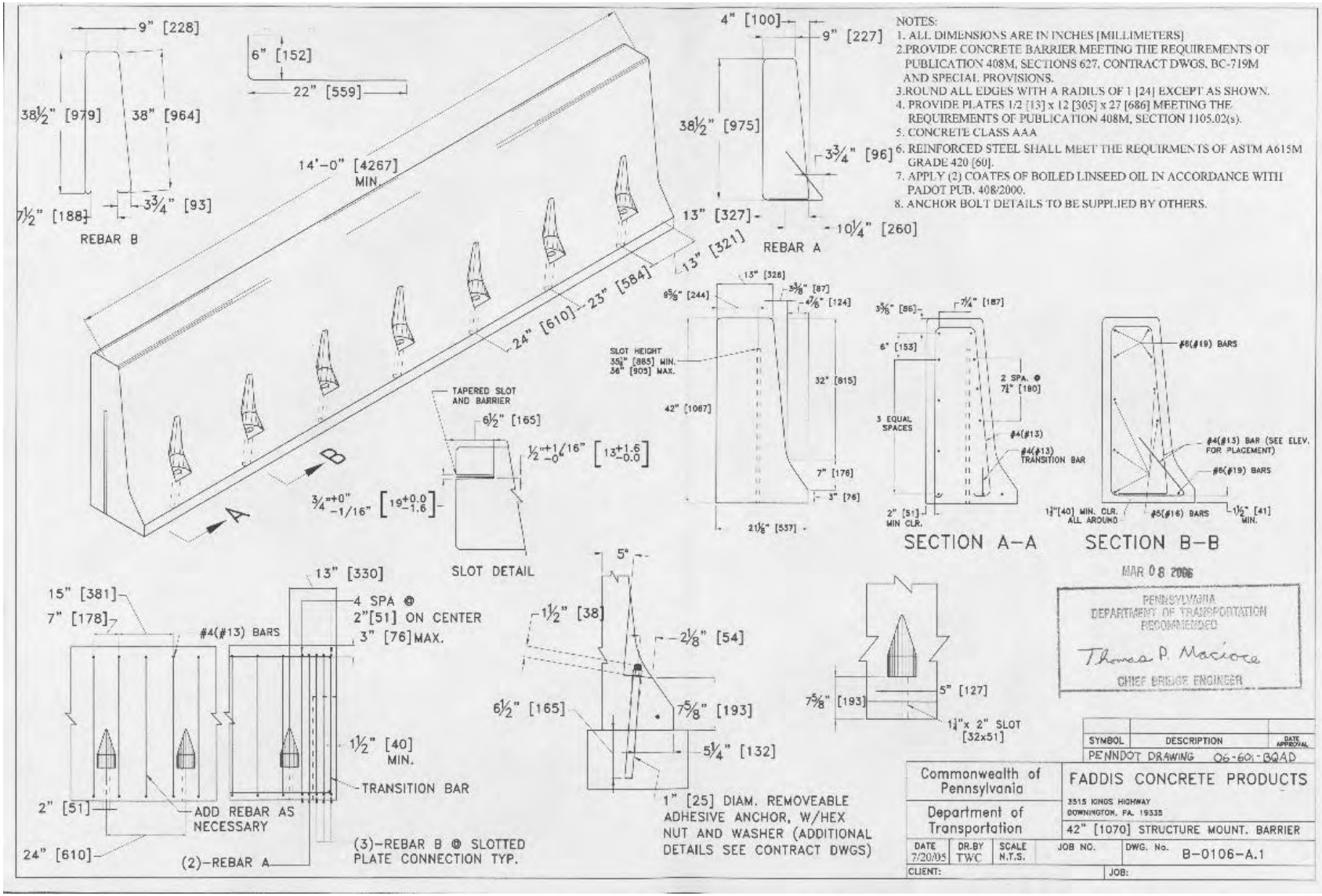

NOTES:
1. ALL DIMENSIONS ARE IN INCHES [MILLIMETERS]
2. PROVIDE CONCRETE BARRIER MEETING THE REQUIREMENTS OF PUBLICATION 408M, SECTIONS 627, CONTRACT DWGS, BC-719M AND SPECIAL PROVISIONS.
3. ROUND ALL EDGES WITH A RADIUS OF 1 [24] EXCEPT AS SHOWN.
4. PROVIDE PLATES 1/2 [13] x 12 [305] x 27 [686] MEETING THE REQUIREMENTS OF PUBLICATION 408M, SECTION 1105.02(s).
5. CONCRETE CLASS AAA
6. REINFORCED STEEL SHALL MEET THE REQUIRMENTS OF ASTM A615M GRADE 420 [60].
7. APPLY (2) COATES OF BOILED LINSEED OIL IN ACCORDANCE WITH PADOT PUB. 408/2000.
8. ANCHOR BOLT DETAILS TO BE SUPPLIED BY OTHERS.

MAR 08 2006

PENNSYLVANIA DEPARTMENT OF TRANSPORTATION RECOMMENDED
Thomas P. Macioce
CHIEF BRIDGE ENGINEER

SYMBOL	DESCRIPTION	DATE APPROVAL
PENNDOT DRAWING 06-601-BQAD		

Commonwealth of Pennsylvania			FADDIS CONCRETE PRODUCTS	
Department of Transportation			3515 KINGS HIGHWAY DOWNINGTON, PA. 19335	
			42" [1070] STRUCTURE MOUNT. BARRIER	
DATE 7/20/05	DR.BY TWC	SCALE N.T.S.	JOB NO.	DWG. No. B-0106-A.1
CLIENT:			JOB:	

Product:

Hanson Pipe & Precast
Post and Panel Noise Barriers
PENNDOT Drawing 91-245-PE(2)

Approval Date: **Initiated By SOL:**

January 17, 2008 431-08-01

Application/Use:

Post and Panel Noise Barriers manufactured by Hanson Pipe & Precast, 201 S. Keim Str., Pottstown, PA 19464 (Telephone No. 310-970-2216), have been approved for use as an "**alternate"** or "**as-designed"** Sound Barrier.

Specifications:

Attached is a copy of the Design/Material/Construction Specifications specified on the Standard Detail Drawings PENNDOT Drawing 91-245-PE(2) dated January 9, 2008 for Post and Panel Noise Barriers for your use.

Standard Drawing:

Attached is a copy of the Standard Detail Drawing 91-245-PE(2) dated August 6, 2007 of Hanson Pipe & Precast Noise Barrier Details for your use.

Comment:

On those projects permitting the use of this system as an alternate, a special provision should be included in the proposal to indicate that the "Post and Panel Noise Barriers" as an alternate is allowed.

The contractor will be required to revise the pertinent contract drawings as per DM-4M, PP 1.10 to show the usage of "Post and Panel Noise Barriers" and will also be required to reimburse the Department a fee of $1000 per design for the review and approval of the revision. This should be specified in the contract's Special Provision.

FHWA approval has been secured for Post and Panel Noise Barriers system.

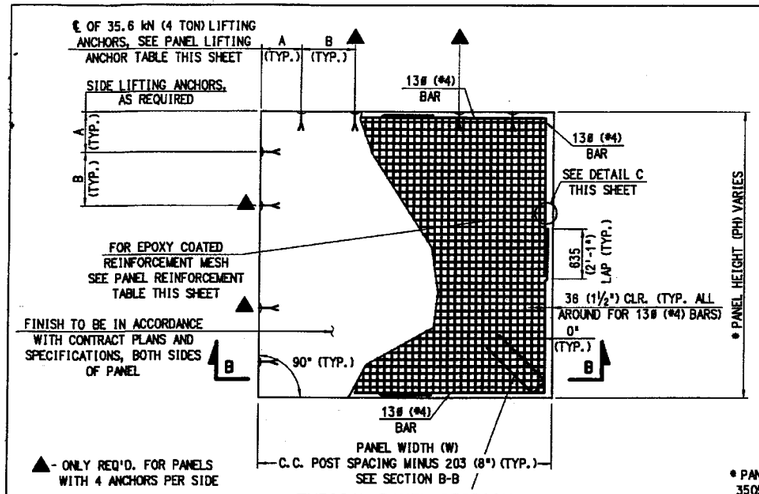

▲ - ONLY REQ'D. FOR PANELS WITH 4 ANCHORS PER SIDE

TYPICAL PANEL SECTION

N.T.S.

PANEL LIFTING ANCHOR TABLE, 35.6 kN (4 TON)		
POST SPACING	PANEL HEIGHT (PH)	ANCHORS PER SIDE
3658 (12'-0")	PH ≤ 5182 (17'-0")	2
▲3658 (12'-0")	5182 (17'-0") < PH ≤ 9906 (32'-6")	4
4877 (16'-0")	PH ≤ 3658 (12'-0")	2
▲6096 (20'-0")	PH ≤ 2743 (9'-0")	2
6096 (20'-0")	2743 (9'-0" < PH ≤ 3658 (12'-0")	4

ANCHOR LOCATION TABLE		
PANEL HEIGHT OR WIDTH (PH OR W)	A	B
1823 (6') ≥ PH OR W ≤ 3353 (11')	610 (2')	N/A
3353 (11') > PH OR W ≤ 5791 (19')	914 (3')	N/A
5791 (19') > PH OR W ≤ 9906 (32'-6")	762 (2'-6")	1 422 (4'-8")

* PANEL WITH HEIGHT AND WIDTH GREATER THAN 3505 (11'-6") WILL BE FABRICATED IN SECTIONS AND FITTED AS SHOWN IN DETAIL D, THIS SHEET.

GENERAL NOTES

- o ALL DIMENSIONS ARE GIVEN IN MILLIMETERS UNLESS OTHERWISE NOTED. U.S. CUSTOMARY UNITS IN ( ) PARENTHESES
- o PROVIDE MATERIALS AND WORKMANSHIP IN ACCORDANCE WITH PENNSYLVANIA DEPARTMENT OF TRANSPORTATION SPECIFICATIONS, PUBLICATION 408/2003 AND THE CONTRACT SPECIAL PROVISIONS.
- o DESIGN SPECIFICATIONS :
  - -GUIDE SPECIFICATIONS FOR STRUCTURAL DESIGN OF SOUND BARRIERS OF AASHTO (1989) (INCLUDING INTERIM SPECIFICATIONS 2002) AND AS SUPPLEMENTED BY DESIGN MANUAL, PART 4 - STRUCTURES APRIL 2000 ED. (INCLUDING MAY 2004 REVISIONS).
  - -STANDARD SPECIFICATIONS FOR STRUCTURAL SUPPORTS FOR HIGHWAY SIGNS, LUMINAIRES AND TRAFFIC SIGNALS, (4TH ED., 2001) AASHTO (INCLUDING 2002 INTERIM SPECIFICATIONS).
  - -DESIGN IN ACCORDANCE WITH WORKING STRESS DESIGN METHOD WITH NO OVERSTRESS ALLOWED.
- o DESIGN LOADS (GROUND MOUNTED ONLY):
  - -WIND LOAD = .96 KPa (20 PSF) FOR HEIGHT ZONE 0 TO 4 267 (0 TO 14")
    1.34 KPa (28 PSF) FOR HEIGHT ZONES OVER 4 267 (14').
  - -ICE LOAD = 144 Pa (3 PSF) (APPLIED TO ONE SIDE OF PANEL)
- o CONCRETE :
  - -USE DESIGN STRENGTH f'c=35 MPa (5,000 PSI @ 28 DAYS) CONC. IN PANELS AND POSTS, UNLESS OTHERWISE NOTED
  - -USE DESIGN STRENGTH f'c=21 MPa (3,000 PSI @ 28 DAYS) CONC. IN FOOTINGS, CAISSONS AND PEDESTALS. (CLASS A CEMENT CONCRETE)
- o PRECAST PANELS AND POSTS TO BE MANUFACTURED IN STEEL FORMS USING TILT-UP FORMS ONLY WITH A MINIMUM TILT ANGLE OF 70° FOR STRIPPING.
- o PANELS ARE DESIGNED FOR A MAXIMUM 38 (1½") OF ADDITIONAL THICKNESS FOR ARCHITECTURAL FINISHES.
- o PROVIDE STRUCTURAL STEEL CONFORMING TO M270 (ASTM A709) GRADE 50 DESIGNATION. GALVANIZE ALL STRUCTURAL STEEL, LIFTING HARDWARE, BOLTS, NUTS, AND WASHERS IN ACCORDANCE WITH PUBLICATION 408M/2003, SECTION 1105.02(a).
- o REINFORCING STEEL :
  - -REINFORCEMENT STEEL TO MEET THE REQUIREMENTS OF ASTM A615, fy = 414 MPa (60,000 PSI), EPOXY COATED.
  - -WIRE FABRIC REINFORCEMENT TO MEET THE REQUIREMENTS OF ASTM A185, fy = 414 MPa (60,000 PSI), EPOXY COATED.
- o JOINT MATERIAL :
  - -JOINT SEALANT MATERIAL SIKAFLEX 1A UNLESS NOTED OTHERWISE.
- o TOLERANCES :

POSTS -	LENGTH	: ± 13 (± ½")
	WIDTH	: ± 6 (± ¼")
	DEPTH	: ± 6 (± ¼")
	SLOT WIDTH	: ± 3 (± ⅛")
	SLOT DEPTH	: ± 3 (± ⅛")
	OUT OF FLATNESS	: 3 (⅛") FOR POST HEIGHTS UP TO 2 438 (8'-0")
		6 (¼") FOR POST HEIGHTS ABOVE 2 438 (8'-0")
PANELS -	HEIGHT	: ± 6 (±¼")
	LENGTH	: ± 13 (±½")
	THICKNESS	: ± 6 (±¼")
	OUT OF FLATNESS	: 3 (⅛") FOR PANEL LENGTHS UP TO 2 438 (8'-0")
		6 (¼") FOR PANEL LENGTHS ABOVE 2 438 (8'-0")

BASE PLATES - FLATNESS : ASTM VOL. 01.04 04 A6/A6M-04b TABLE 13. MAXIMUM VARIATION 6 (1/4").

- o PROVIDE SUFFICIENT EMBEDMENT LENGTH OF REINFORCEMENT BARS TO FULLY DEVELOP ITS STRENGTH AS PER BC-736M.
- o APPLY ANTI-GRAFFITI PAINT TO EXPOSED SURFACES WHERE INDICATED OR SPECIFIED.
- o SEE BC-776M & BC-777M FOR ADDITIONAL DETAILS NOT SHOWN.
- o FOUNDATION DESIGN BY OTHERS
- o FOLLOWING FORM REMOVAL PANELS MUST BE LIFTED, STORED AND TRANSPORTED IN THE VERTICAL POSITION.
- o ALL CRACKED PANELS AND CRACKED POSTS WITH CRACKS WIDER THAN .2mm (.008") WILL BE REJECTED EITHER AT THE FABRICATION SHOP OR THE CONSTRUCTION SITE, EVEN AFTER INSTALLATION, BUT PRIOR TO ACCEPTANCE OF THE PROJECT.

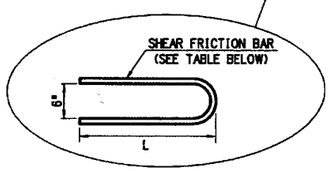

SHEAR FRICTION REBAR

POST SPACING	REBAR NO.	L
3658 (12'-0")	13 (#4)	762 (2'-6")
4877 (16'-0")	16 (#5)	1 067 (3'-6")
6096 (20'-0")	16 (#5)	1 067 (3'-6")

(ONLY REQUIRED FOR TOTAL PANEL HEIGHTS > 6 096 (20'), LOCATE AT BOTTOM CORNER OF BOTTOM PANEL ONLY (TYP.)

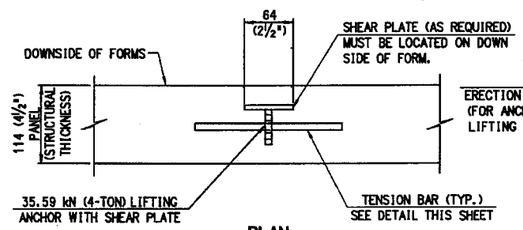

PLAN

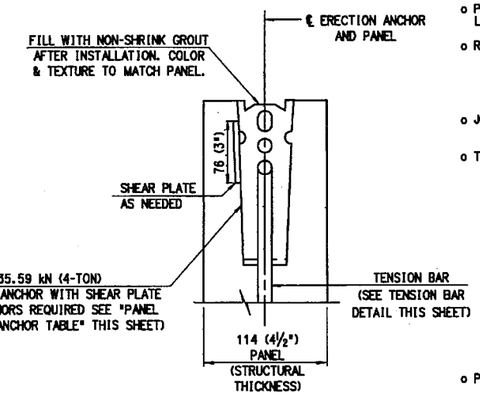

TYPICAL SECTION

BURKE RAPID-LIFT ANCHORAGE DETAILS

N.T.S.

PENNSYLVANIA DEPARTMENT OF TRANSPORTATION RECOMMENDED

Thomas P. Macioce

CHIEF BRIDGE ENGINEER

JAN. 17, 2008

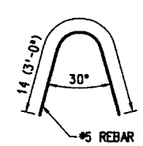

TENSION BAR DETAIL

N.T.S.

Mark	Description	By	Chk'd	Recm'd	Date
	REVISIONS				

DRAWING NO. PADOT #91-245-PE(2)

PANEL REINFORCEMENT (WIND LOAD = 1.34 KPa (28 PSF)					
POST SPACING	f'c MPa (psi)	W.W.F. REINFORCEMENT	REBAR VERTICAL	REBAR HORIZONTAL	MAX. STEEL
3658 (12'-0")	24.13 (3500)	102 X 102 - MW45 X MW45 (4"X4" - W7 X W7)	13 @ 279 (#4 @ 11")	13 @ 279 (#4 @ 11)	573.5 mm²/m (0.271 in²/ft.)
4877 (16'-0")	24.13 (3500)	102 X 102 - MW60 X MW45 (4"X4" - W9 X W7)	13 @ 216 (#4 @ 8½")	13 @ 279 (#4 @ 11")	573.5 mm²/m (0.271 in²/ft.)
6096 (20'-0")	34.47 (5000)	102 X 102 - MW90 X MW45 (4"X4" - W14 X W7)	13 @ 140 (#4 @ 5½")	13 @ 279 (#4 @ 11")	876.3 mm²/m (0.414 in²/ft.)

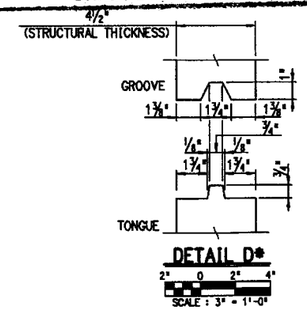

DETAIL D*

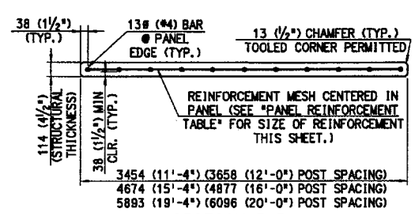

SECTION B-B

N.T.S.

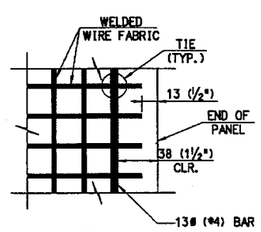

DETAIL C

N.T.S.

*ONLY IF A JOINT IS PERMITTED IN THE CONTRACT. (ONLY STRUCTURAL THICKNESS SHOWN FOR CLARITY)

JOHNSON, MIRMIRAN & THOMPSON

220 St. Charles Way, Suite 200 York, Pennsylvania 17402

COMMONWEALTH OF PENNSYLVANIA PROFESSIONAL CRAIG SCOTT CAMPBELL ENGINEER PE-044004-E

Craig Scott Campbell ENGINEER

8/6/07 DATE

"I CERTIFY THAT ALL ASSUMPTIONS MADE IN DESIGNING THIS WALL HAVE BEEN VALIDATED EITHER THROUGH CONSTRUCTION DETAILS OR SPECIAL NOTES AND INSTRUCTIONS TO THE FABRICATOR, ERECTOR, AND CONTRACTOR."

HANSON PIPE & PRECAST
Pottstown, PA

NOISE BARRIER DETAILS

3658 (12'-0"), 4877 (16'-0") & 6096 (20'-0") POST SPACING

BASED ON

PENNSYLVANIA DEPARTMENT OF TRANSPORTATION SPECIFICATIONS

GENERAL NOTES & PANEL DETAILS - 1

SHT. 1 OF 6

m:\struct\HbPA3777\PANEL_DETIDGN
8/3/2007 2:15:05 PM

DESIGNED BY: WGM | DRAWN BY: JGC | CHECKED BY: CSC

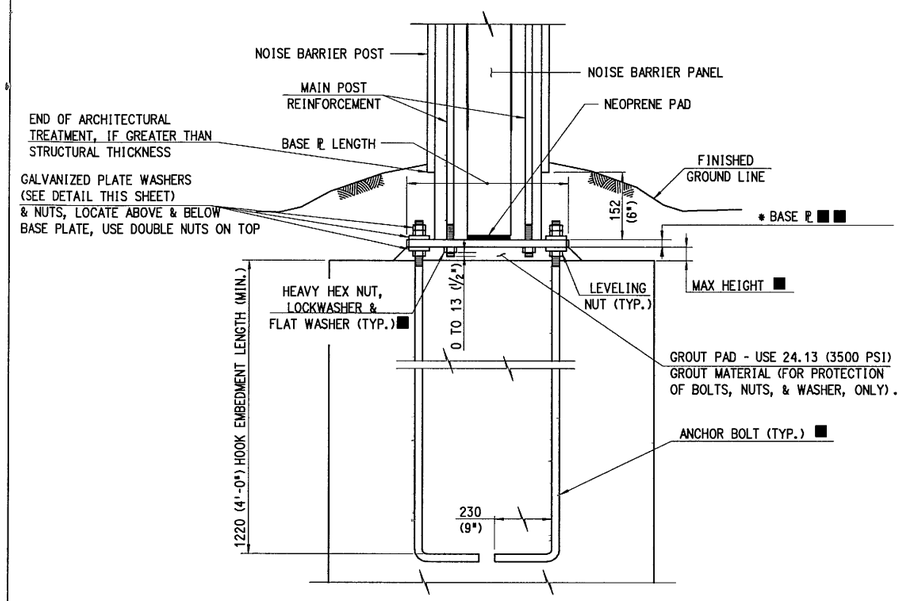

*THIS METHOD OF SECURING THE CONCRETE POST TO THE FOUNDATION WITH A BASE ℄ FOR NOISE WALL BARRIERS IS COVERED UNDER U.S. PATENT NO. 4,862,992

CAISSON REINFORCEMENT NOT SHOWN FOR CLARITY

ANCHORAGE DETAIL

(CAISSON FOOTING SHOWN, SPREAD FOOTING SIMILAR)

N.T.S.

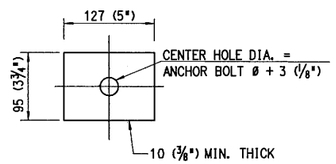

GALVANIZED PLATE WASHER

A36 STEEL OR EQUIVALENT

SCALE : 3" = 1'-0"

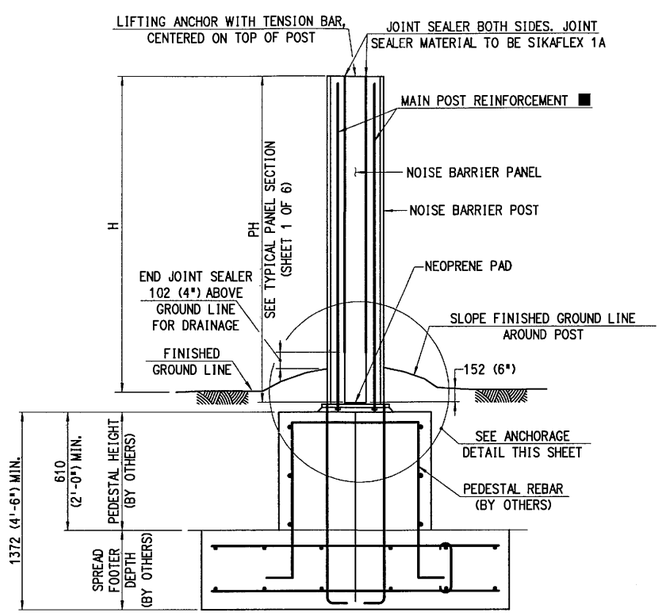

SPREAD FOOTING

(BY OTHERS)

NOTE : CAISSON FOUNDATION & SPREAD FOOTING TO BE DESIGNED AND CONSTRUCTED BY OTHERS IN ACCORDANCE WITH THESE DETAILS & THE BC776M & BC777M STD. DRAWINGS. REINFORCEMENT SHOWN IN FOUNDATIONS FOR REFERENCE ONLY

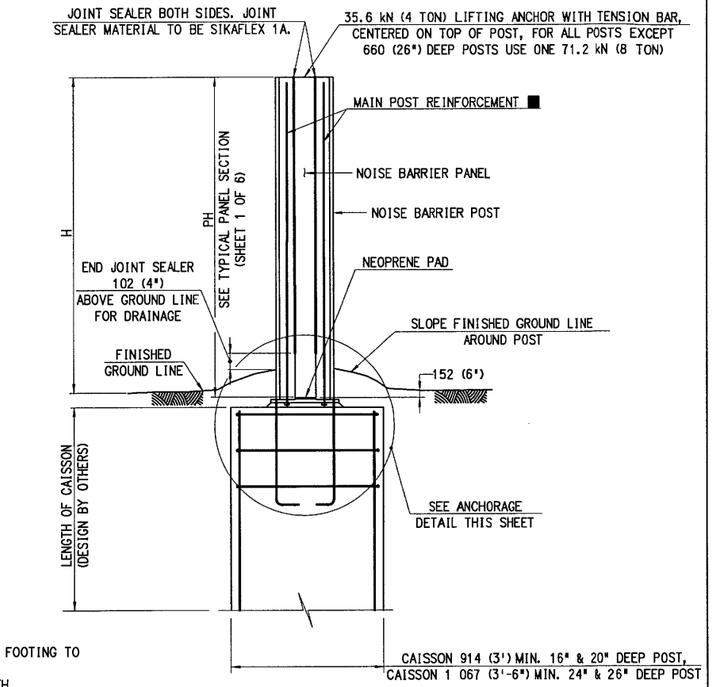

CAISSON FOUNDATION

(BY OTHERS)

■ SEE NOISE BARRIER POST AND BASE PLATE DIMENSIONS TABLES ON SHEET 5 & 6

■■ SEE *BASE ℄ DETAIL -1 TO -4* ON POST DETAIL-3 SHEET.

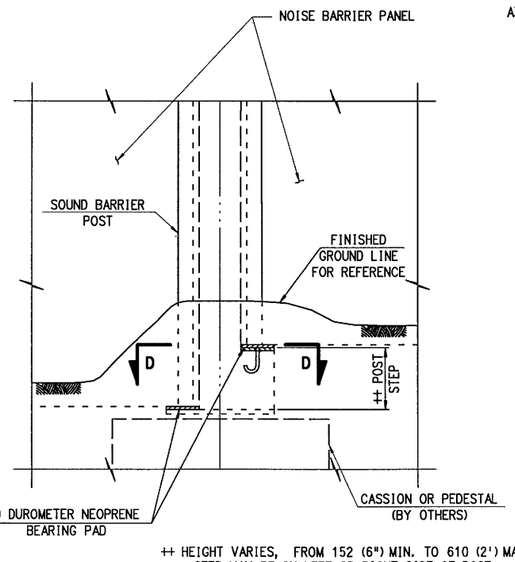

++ HEIGHT VARIES, FROM 152 (6") MIN. TO 610 (2') MAX. STEP MAY BE ON LEFT OR RIGHT SIDE OF POST.

ELEVATION VIEW OF STEP POST (RT. SIDE STEP SHOWN)

SCALE : 1" = 1'-0"

BASE ℄ WIDTH	A DIM.
457 (18")	140 (5 1/2")
483 (19")	152 (6")
508 (20")	165 (6 1/2")
533 (21")	179 (7")

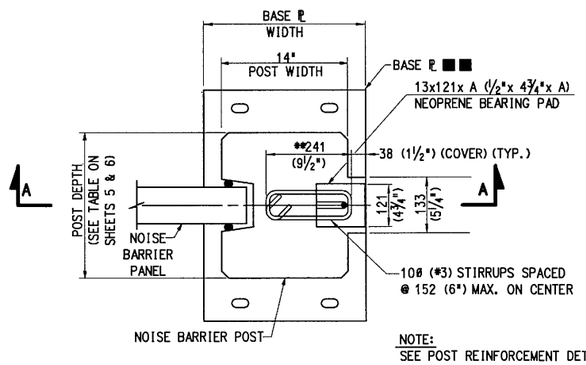

SECTION D-D

SCALE : 1 1/2" = 1'-0"

NOTE:
SEE POST REINFORCEMENT DETAILS-1 TO -4 ON POST DETAIL-2 SHEET FOR ADDITIONAL REINFORCEMENT.

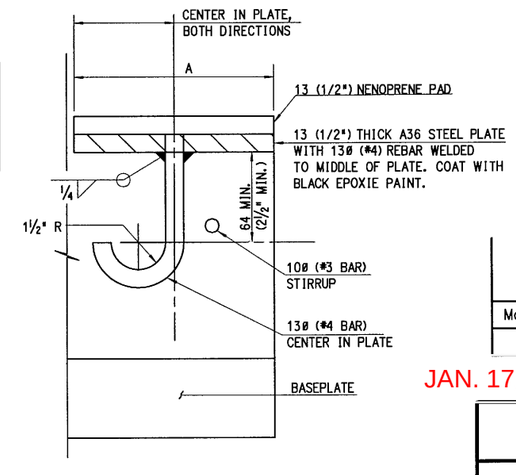

SECTION A-A

Mark	Description	By	Chk'd	Recm'd	Date
	REVISIONS				

JAN. 17, 2008 **DRAWING NO. PADOT #91-245-PE(2)**

HANSON PIPE & PRECAST
Pottstown, PA

NOISE BARRIER DETAILS

3658 (12'-0"), 4877 (16'-0") & 6096 (20'-0") POST SPACING

BASED ON

PENNSYLVANIA DEPARTMENT OF TRANSPORTATION SPECIFICATIONS

POST DETAILS - 1

COMMONWEALTH OF PENNSYLVANIA REGISTERED PROFESSIONAL CRAIG SCOTT CAMPBELL ENGINEER PE-046204-E

SHT. 2 OF 8

m:\struct\HoPA3777\POST_DET1.dgn 8/3/2007 2:17:50 PM

DESIGNED BY: WEM | DRAWN BY: JEC | CHECKED BY: CSC

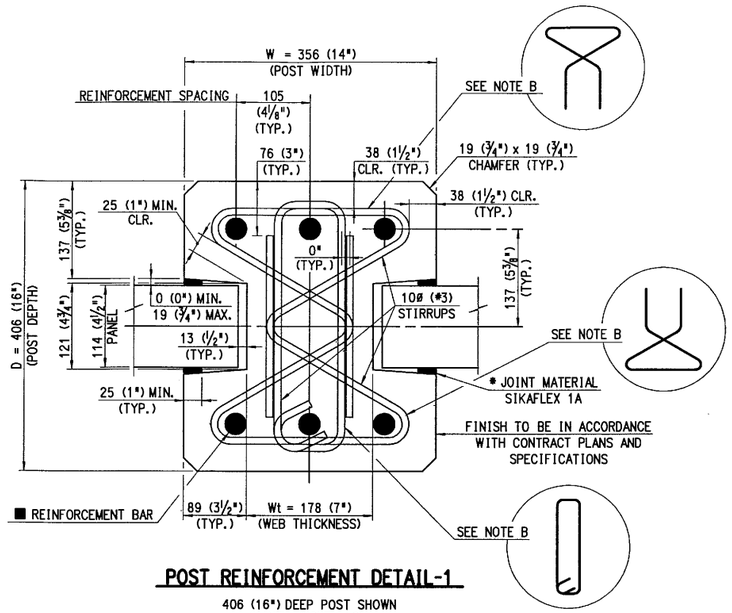

POST REINFORCEMENT DETAIL-1

406 (16") DEEP POST SHOWN
(PANEL ANGLE = 0°)

SCALE : 3" = 1'-0"

* BACKER ROD REQUIRED IF OPENING IS GRATER THAN 6 (1/4 ") (TYP.)

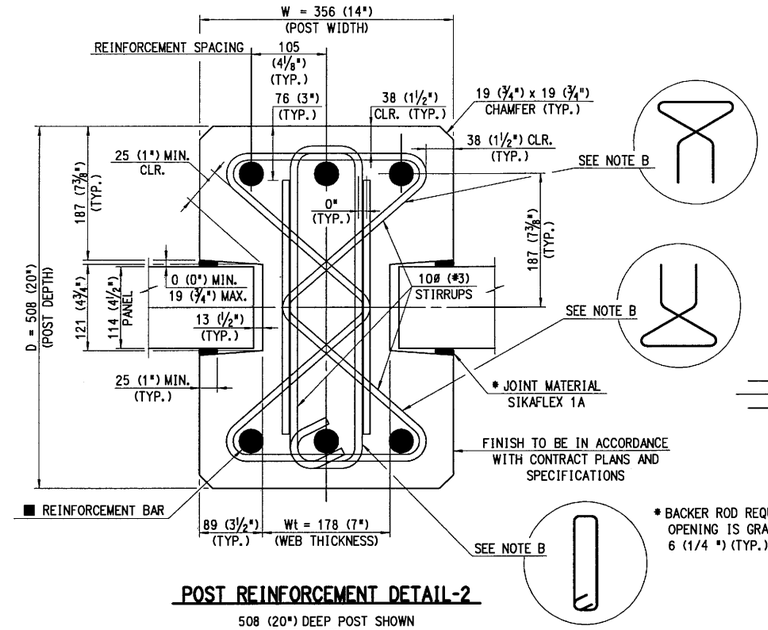

POST REINFORCEMENT DETAIL-2

508 (20") DEEP POST SHOWN
(PANEL ANGLE = 0°)

SCALE : 3" = 1'-0"

* BACKER ROD REQUIRED IF OPENING IS GRATER THAN 6 (1/4 ") (TYP.)

■ FOR REINFORCEMENT BAR SIZE & QUANTITY SEE NOOISE BARRIER POST AND BASE PLATE DIMENSION TABLES ON SHEET 5 & 6.

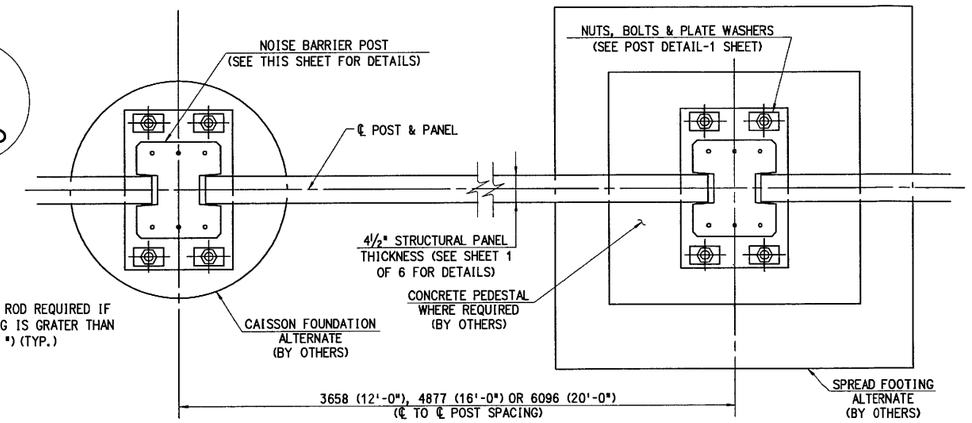

PLAN VIEW

SCALE : 1" = 1'-0"

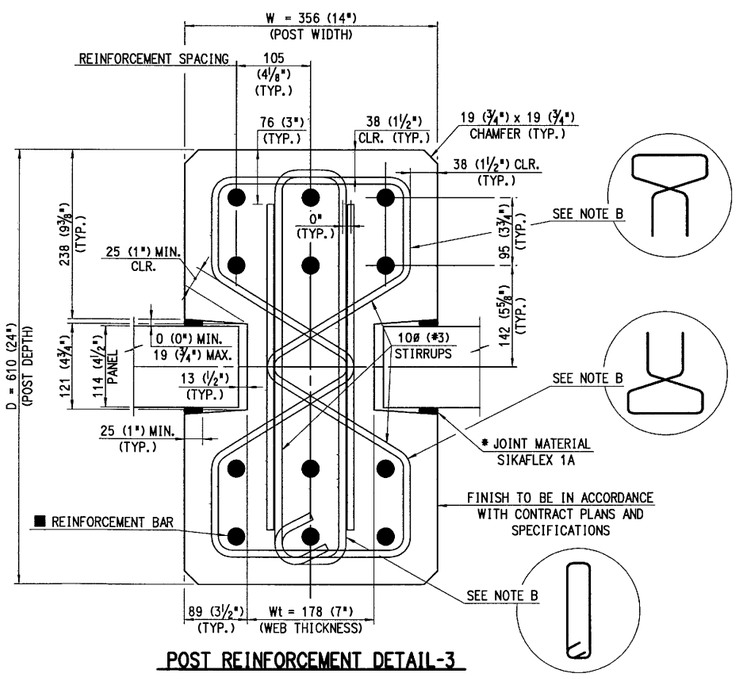

POST REINFORCEMENT DETAIL-3

610 (24") DEEP POST SHOWN
(PANEL ANGLE = 0°)

SCALE : 3" = 1'-0"

* BACKER ROD REQUIRED IF OPENING IS GRATER THAN 6 (1/4 ") (TYP.)

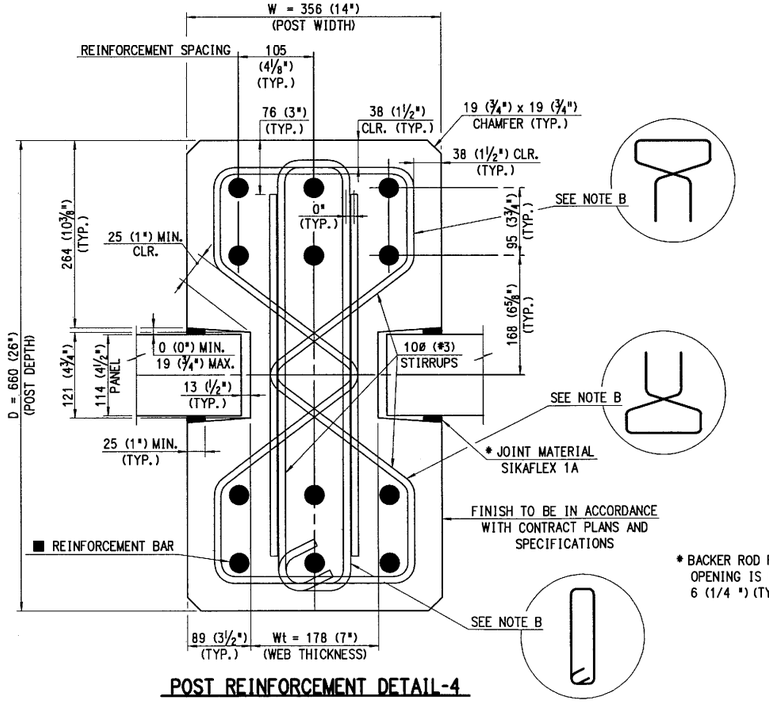

POST REINFORCEMENT DETAIL-4

660 (26") DEEP POST SHOWN
(PANEL ANGLE = 0°)

SCALE : 3" = 1'-0"

* BACKER ROD REQUIRED IF OPENING IS GRATER THAN 6 (1/4 ") (TYP.)

NOTES:

1. SEE "DETAIL A" ON POST DETAIL-3 FOR MAX PANEL ANGLES 0° TO 8°.
2. SEE POSET DETAIL-3 FOR LAYOUT OF THE BASE PLATE ON THE CAISSON.

NOTE B:

FOR STIRRUP SPACING SEE NOISE BARRIER POST AND BASE PLATE DIMENSIONS TABLES ON SHEETS 5 & 6. HANSON PIPE & PRECAST IS THE OWNER OF THE PATENT FOR THESE REINFORCEMENT BAR STIRRUPS (U.S. PATENT NO. 5,119,614).

Mark	Description	By	Chk'd	Recm'd	Date
	REVISIONS				

JAN. 17, 2008 **DRAWING NO. PADOT #91-245-PE(2)**

HANSON PIPE & PRECAST

Pottstown, PA

NOISE BARRIER DETAILS

3658 (12'-0"), 4877 (16'-0") & 6096 (20'-0") POST SPACING

BASED ON

PENNSYLVANIA DEPARTMENT OF TRANSPORTATION SPECIFICATIONS

POST DETAILS - 2

COMMONWEALTH OF PENNSYLVANIA
REGISTERED PROFESSIONAL
CRAIG SCOTT CAMPBELL
ENGINEER
PE-044204-E

SHT. 3 OF 8

m:\struct\HsPA3777\POST_DET2.dgn
8/3/2007 2:20:46 PM

DESIGNED BY: WEM | DRAWN BY: JEG | CHECKED BY: CSC

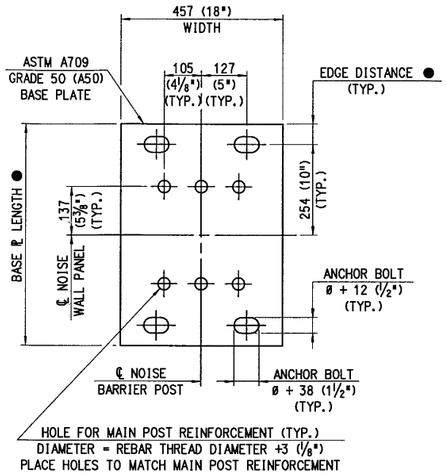

BASE PLATE DETAIL-1

BASE PLATE FOR 406 (16")
DEEP POST SHOWN

4" 0 4" 8"
SCALE : 1½" = 1'-0"

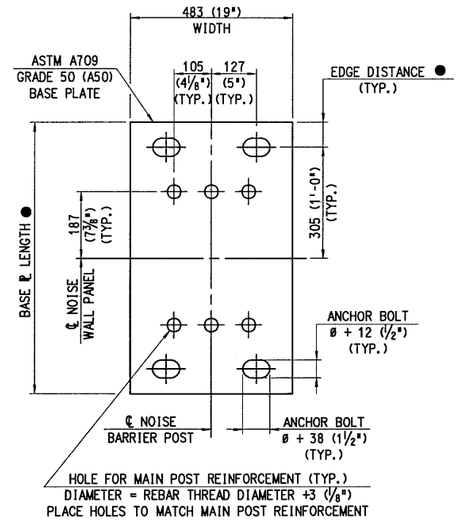

BASE PLATE DETAIL-2

BASE PLATE FOR 508 (20")
DEEP POST SHOWN

4" 0 4" 8"
SCALE : 1½" = 1'-0"

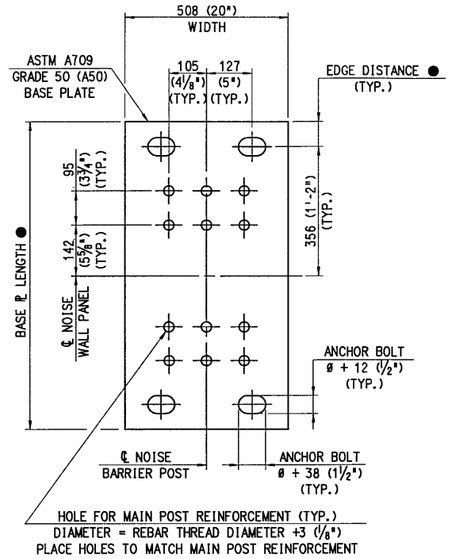

BASE PLATE DETAIL-3

BASE PLATE FOR 610 (24")
DEEP POST SHOWN

4" 0 4" 8"
SCALE : 1½" = 1'-0"

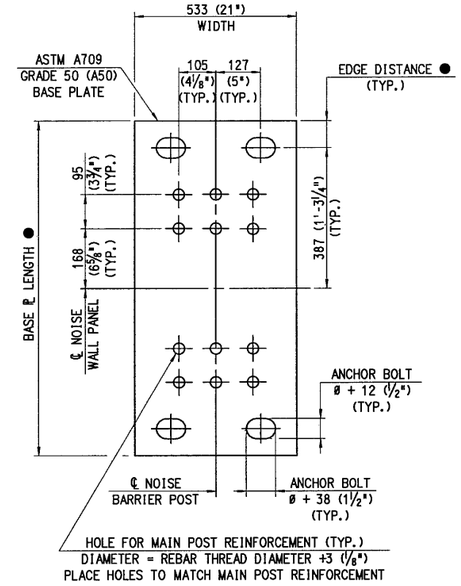

BASE PLATE DETAIL-4

BASE PLATE FOR 660 (26")
DEEP POST SHOWN

4" 0 4" 8"
SCALE : 1½" = 1'-0"

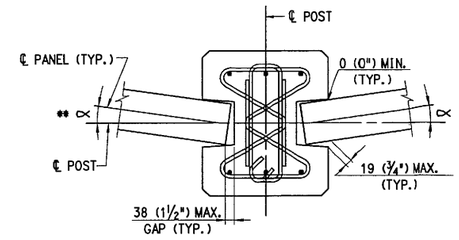

NOTE: PANEL ANGLE, ∝ = 8° MAX.

DETAIL A

SHOWS MAXIMUM ANGLE OF PANELS
USING A STRAIGHT POST.

4" 0 4" 8"
SCALE : 1½" = 1'-0"

** SPECIAL POST DESIGN REQUIRED FOR ∝ ANGLES > 8°

● SEE NOISE BARRIER POST AND BASE PLATE DIMENSION TABLES ON SHEETS 5 & 6.

NOTES:

1. SEE POST DETAIL - 2 FOR POST DETAILS.
2. FOR BASE ℄ LENGTH, WIDTH, THICKNESS & HOLE SIZES. SEE NOISE BARRIER POST AND BASE PLATE DIMENSIONS TABLES ON SHEETS 5 & 6.

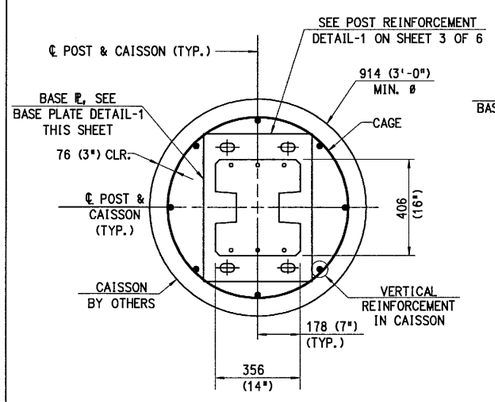

CAISSON FOUNDATION PLAN-1

6" 0 6" 12"
SCALE : 1" = 1'-0"

406 (16") DEEP POST SHOWN
LARGEST BASE PLATE SIZE SHOWN

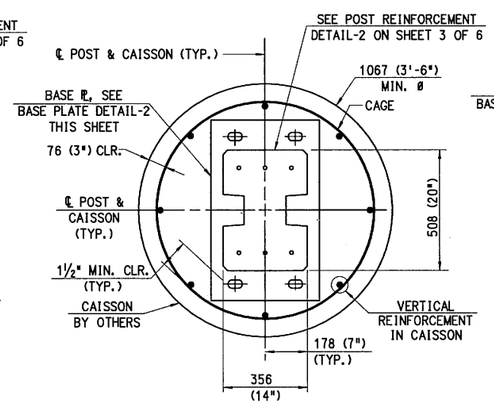

CAISSON FOUNDATION PLAN-2

6" 0 6" 12"
SCALE : 1" = 1'-0"

508 (20") DEEP POST SHOWN
LARGEST BASE PLATE SIZE SHOWN

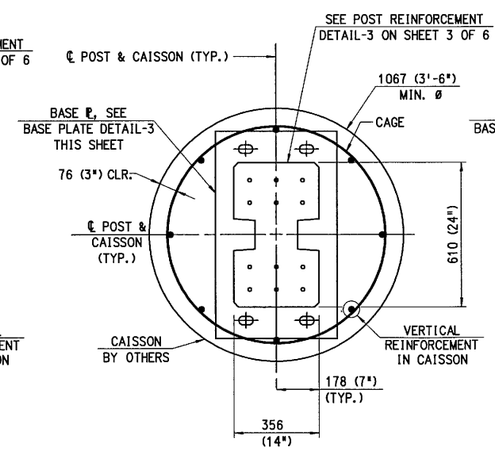

CAISSON FOUNDATION PLAN-3

6" 0 6" 12"
SCALE : 1" = 1'-0"

610 (24") DEEP POST SHOWN
LARGEST BASE PLATE SIZE SHOWN

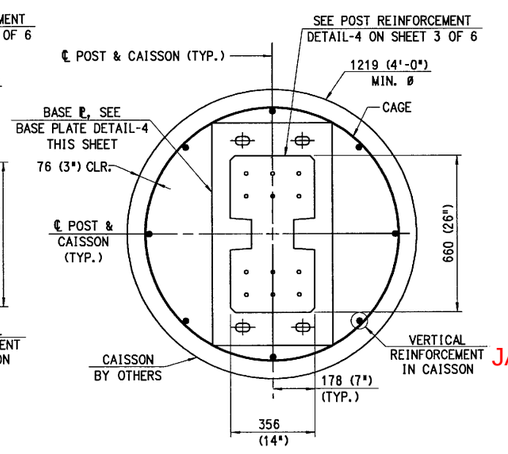

CAISSON FOUNDATION PLAN-4

6" 0 6" 12"
SCALE : 1" = 1'-0"

660 (26") DEEP POST SHOWN
LARGEST BASE PLATE SIZE SHOWN

Mark	Description	By	Chk'd	Recm'd	Date
	REVISIONS				

JAN. 17, 2008

DRAWING NO. PADOT #91-245-PE(2)

COMMONWEALTH OF PENNSYLVANIA
REGISTERED PROFESSIONAL
CRAIG SCOTT CAMPBELL
ENGINEER
PE-048204-E

HANSON PIPE & PRECAST

Pottstown, PA

NOISE BARRIER DETAILS

3658 (12'-0"), 4877 (16'-0") & 6096 (20'-0") POST SPACING

BASED ON

PENNSYLVANIA DEPARTMENT OF
TRANSPORTATION SPECIFICATIONS

POST DETAILS - 3

SHT. 4 OF 8

m:\struct\HePA3777\POST_DET3.dgn
8/3/2007 2:21:54 PM

DESIGNED BY: WEM | DRAWN BY: JEC | CHECKED BY: CSC

NOISE BARRIER POST AND BASE PLATE DIMENSIONS TABLE (WIND LOAD = 20 PSF FOR HEIGHT ZONE ≤ 4 267 (14'-0"))

				A449 ANCHOR BOLT		GALVANIZED STEEL BASE PLATE (GRADE 50)				REINFORCEMENT (GRADE 60)			
	H	P, PH	POST SIZE (W X D X Wt)	DIA.- UNC-2A (MIN.)	** MAX. HEIGHT	WIDTH	LENGTH	* PLATE THICKNESS	EDGE DISTANCE	BAR SIZE	THREADED UNC - 2A ●	QUANTITY PER SIDE ★	STIRRUPS FROM BOT. (MIN.)■
3 658 (12'-0") POST SPACING	3 810 (12'-6")	3 962 (13'-0")	356 X 406 X 178 (14" X 16" X 7")	19 (3/4") - 10	64 (2 1/2")	457 (18")	584 (23")	22 (7/8")	38 (1 1/2")	19 (#6)	19 (3/4) - 10	3	914 (3'-0")
	5 029 (16'-6")	5 182 (17'-0")	356 X 406 X 178 (14" X 16" X 7")	25 (1") - 8	76 (3")	457 (18")	610 (24")	25 (1")	51 (2")	22 (#7)	22 (7/8) - 9	3	1 219 (4'-0")
	5 639 (18'-6")	5 791 (19'-0")	356 X 406 X 178 (14" X 16" X 7")	25 (1") - 8	76 (3")	457 (18")	610 (24")	29 (1 1/8")	51 (2")	25 (#8)	25 (1) - 8	3	1 829 (6'-0")
	6 401 (21'-0")	6 553 (21'-6")	356 X 406 X 178 (14" X 16" X 7")	32 (1 1/4") - 7	89 (3 1/2")	457 (18")	622 (24 1/2")	32 (1 1/4")	57 (2 1/4")	29 (#9)	29 (1 1/8) - 7	3	2 743 (9'-0")
	7 010 (23'-0")	7 163 (23'-6")	356 X 406 X 178 (14" X 16" X 7")	32 (1 1/4") - 7	89 (3 1/2")	457 (18")	622 (24 1/2")	38 (1 1/2")	57 (2 1/4")	32 (#10)	32 (1 1/4) - 7	3	3 353 (11'-0")
	7 315 (24'-0")	7 468 (24'-6")	356 X 508 X 178 (14" X 20" X 7")	32 (1 1/4") - 7	89 (3 1/2")	483 (19")	724 (28 1/2")	38 (1 1/2")	57 (2 1/4")	29 (#9)	29 (1 1/8) - 7	3	2 438 (8'-0")
	8 077 (26'-6")	8 230 (27'-0")	356 X 508 X 178 (14" X 20" X 7")	32 (1 1/4") - 7	89 (3 1/2")	483 (19")	724 (28 1/2")	41 (1 5/8")	57 (2 1/4")	32 (#10)	32 (1 1/4) - 7	3	3 048 (10'-0")
	8 382 (27'-6")	8 534 (28'-0")	356 X 508 X 178 (14" X 20" X 7")	38 (1 1/2") - 6	102 (4")	483 (19")	749 (29 1/2")	44 (1 3/4")	70 (2 3/4")	36 (#11)	35 (1 3/8") - 6	3	3 353 (11'-0")
4 877 (16'-0") POST SPACING	2 591 (8'-6")	2 743 (9'-0")	356 X 406 X 178 (14" X 16" X 7")	19 (3/4") - 10	64 (2 1/2")	457 (18")	584 (23")	19 (3/4")	38 (1 1/2")	16 (#5)	16 (5/8) - 11	3	914 (3'-0")
	3 200 (10'-6")	3 353 (11'-0")	356 X 406 X 178 (14" X 16" X 7")	25 (1") - 8	76 (3")	457 (18")	610 (24")	22 (7/8")	51 (2")	19 (#6)	19 (3/4) - 10	3	914 (3'-0")
	4 267 (14'-0")	4 420 (14'-6")	356 X 406 X 178 (14" X 16" X 7")	25 (1") - 8	76 (3")	457 (18")	610 (24")	29 (1 1/8")	51 (2")	22 (#7)	22 (7/8) - 9	3	1 524 (5'-0")
	4 877 (16'-0")	5 029 (16'-6")	356 X 406 X 178 (14" X 16" X 7")	25 (1") - 8	76 (3")	457 (18")	610 (24")	32 (1 1/4")	51 (2")	25 (#8)	25 (1) - 8	3	2 134 (7'-0")
	5 486 (18'-0")	5 639 (18'-6")	356 X 406 X 178 (14" X 16" X 7")	32 (1 1/4") - 7	89 (3 1/2")	457 (18")	622 (24 1/2")	35 (1 3/8")	57 (2 1/4")	29 (#9)	29 (1 1/8) - 7	3	2 743 (9'-0")
	6 248 (20'-6")	6 401 (21'-0")	356 X 406 X 178 (14" X 16" X 7")	32 (1 1/4") - 7	89(3 1/2")	457 (18")	622 (24 1/2")	38 (1 1/2")	57 (2 1/4")	32 (#10)	32 (1 1/4) - 7	3	3 658 (12'-0")
	6 858 (22'-6")	7 010 (23'-0")	356 X 508 X 178 (14" X 20" X 7")	32 (1 1/4") - 7	89 (3 1/2")	483 (19")	724 (28 1/2")	41 (1 5/8")	57 (2 1/4")	32 (#10)	32 (1 1/4) - 7	3	3 353 (11'-0")
	7 772 (25'-6")	7 925 (26'-0")	356 X 508 X 178 (14" X 20" X 7")	38 (1 1/2") - 6	102 (4")	483 (19")	749 (29 1/2")	48 (1 7/8")	70 (2 3/4")	36 (#11)	35 (1 3/8) - 6	3	4 267 (14'-0")
	8 382 (27'-6")	8 534 (28'-0")	356 X 610 X 178 (14" X 24" X 7")	38 (1 1/2") - 6	102 (4")	508 (20")	851 (33 1/2")	48 (1 7/8")	70 (2 3/4")	25 (#8)	25 (1) - 8	6	4 267 (14'-0")
6 096 (20'-0") POST SPACING	2 591 (8'-6")	2 743 (9'-0')	356 X 406 X 178 (14" X 16" X 7")	19 (3/4") - 10	64 (2 1/2")	457 (18")	584 (23")	22 (7/8")	38 (1 1/2")	16 (#5)	16 (5/8) - 11	3	914 (3'-0")
	2 896 (9'-6")	3 048 (10'-0")	356 X 406 X 178 (14" X 16" X 7")	25 (1") - 8	76 (3")	457 (18")	610 (24")	22 (7/8")	51 (2")	19 (#6)	19 (3/4) - 10	3	914 (3'-0")
	3 810 (12'-6")	3 962 (13'-0")	356 X 406 X 178 (14" X 16" X 7")	25 (1") - 8	76 (3")	457 (18")	610 (24")	29 (1 1/8")	51 (2")	22 (#7)	22 (7/8) - 9	3	1 524 (5'-0")
	4 420 (14'-6")	4 572 (15'-0")	356 X 406 X 178 (14" X 16" X 7")	32 (1 1/4") - 7	89 (3 1/2")	457 (18")	622 (24 1/2")	32 (1 1/4")	57 (2 1/4")	25 (#8)	25 (1) - 8	3	2 134 (7'-0")
	4 877 (16'-0")	5 029 (16'-6")	356 X 406 X 178 (14" X 16" X 7")	32 (1 1/4") - 7	89 (3 1/2")	457 (18")	622 (24 1/2")	35 (1 3/8")	57 (2 1/4")	29 (#9)	29 (1 1/8) - 7	3	2 743 (9'-0")
	5 486 (18'-0")	5 639 (18'-6")	356 X 406 X 178 (14" X 16" X 7")	38 (1 1/2") - 6	102 (4")	457 (18")	648 (25 1/2")	38 (1 1/2")	70 (2 3/4")	32 (#10)	32 (1 1/4) - 7	3	3 353 (11'-0")
	6 401 (21'-0")	6 553 (21'-6")	356 X 508 X 178 (14" X 20" X 7")	38 (1 1/2") - 6	102 (4")	483 (19")	749 (29 1/2")	44 (1 3/4")	70 (2 3/4")	32 (#10)	32 (1 1/4) - 7	3	3 658 (12'-0")
	6 858 (22'-6")	7 010 (23'-0")	356 X 508 X 178 (14" X 20" X 7")	38 (1 1/2") - 6	102 (4")	483 (19")	749 (29 1/2")	48 (1 7/8")	70 (2 3/4")	36 (#11)	35 (1 3/8") - 6	3	3 962 (13'-0")
	7 468 (24'-6")	7 620 (25'-0")	356 X 610 X 178 (14" X 24" X 7")	38 (1 1/2") - 6	102 (4")	508 (20")	851 (33 1/2")	48 (1 7/8")	70 (2 3/4")	25 (#8)	25 (1) - 8	6	4 267 (14'-0")
	7 925 (26'-0")	8 077 (26'-6")	356 X 660 X 178 (14" X 26" X 7")	38 (1 1/2") - 6	102 (4")	533 (21")	914 (36")	51 (2")	70 (2 3/4")	25 (#8)	25 (1) - 8	6	4 267 (14'-0")
	8 382 (27'-6")	8 534 (28'-0")	356 X 660 X 178 (14" X 26" X 7")	44 (1 3/4") - 5	114 (4 1/2")	533 (21")	927 (36 1/2")	54 (2 1/8")	76 (3")	29 (#9)	29 (1 1/8) - 7	6	4 877 (16'-0")

LEGEND & NOTES

P = POST HEIGHT FOR POST HEIGHTS THAT FALL BETWEEN THE VALUES LISTED, USE THE VALUES FOR THE NEXT LARGER HEIGHT.
PH = PANEL HEIGHT = POST HEIGHT - 25 (1")
W = POST WIDTH
D = POST DEPTH
Wt = WEB THICKNESS

H = POST DESIGN HEIGHT (MEASURED FROM TOP OF POST TO TOP OF FINISHED GROUND. THIS TABLE IS DESIGNED FOR 0 TO 4 267 (14'-0") HEIGHT ZONE. FOR HEIGHT ZONES OVER 4 267 (14'-0") SEE POST DETAIL-5 SHEET.

* TOLERANCE IS +6/-1 (+.25/-.04)

** SEE "ANCHORAGE DETAIL" ON POST DETAIL-1 SHEET.

★ DENOTES TOTAL MAIN REINFORCEMENT IN EACH FLANGE OF POST. FOR REINFORCEMENT LAYOUT, SEE POST REINFORCEMENT DETAIL -1 TO -4 ON SHEET 3

■ STIRRUPS TO BE PLACED AT 152 (6") MAX. ON CENTER, ABOVE THIS HEIGHT STIRRUPS TO BE PLACED AT 305 (12") MAX. ON CENTER.

● THREADS SHALL BE ROLLED AND MEET THE REQUIREMENTS OF ANSI B1.1
USE ASTM A194 PLAIN HEAVY HEX NUTS (GR.2H) WITH UNC THREADS.
USE ASTM F436 GALVANIZED HARDEN FLAT WASHERS
APPLY COATING TO THREADED ENDS OF REINFORCEMENT PRIOR TO PLACING NUT PER PENNDOT DEPARTMENT OF TRANSPORTATION PUBLICATION 408/2003 1060.3 (c) 4.

ALL NUTS SHALL BE SNUG TIGHTENED IN ACCORDANCE WITH PENNDOT SPECIFICATION 408 (2003) 1050.3 (c) 7.

UPON COMPLETION OF TIGHTENING, A COATING SHALL BE APPLIED TO ALL EXPOSED SURFACES OF WASHERS, NUTS AND REBARS, PER PENNDOT PUBLICATION 408/2003 1060.3 (c) 4

CAISSIONS AND SPREAD FOOTING BY OTHERS.

POST - 28 DAY STRUCTURAL DESIGN COMPRESSIVE STRENGTH = 34.47 MPa (5000 PSI)
- 28 DAY MINIMUM MIX DESIGN COMPRESSIVE STRENGTH = 39.6 MPa (5750 PSI)
- ALL POSTS USE ONE 35.6 kN (4 TON) LIFTING ANCHOR, EXCEPT 660 (26") DEEP POST USE ONE 71.2 kN (8 TON) LIFTING ANCHOR

Mark	Description	By	Chk'd	Recm'd	Date
	REVISIONS				

JAN. 17, 2008

DRAWING NO. PADOT #91-245-PE(2)

HANSON PIPE & PRECAST
Pottstown, PA

NOISE BARRIER DETAILS

3658 (12'-0"), 4877 (16'-0") & 6096 (20'-0") POST SPACING

BASED ON

PENNSYLVANIA DEPARTMENT OF TRANSPORTATION SPECIFICATIONS

POST DETAILS - 4

COMMONWEALTH OF PENNSYLVANIA
REGISTERED PROFESSIONAL
CRAIG SCOTT CAMPBELL
ENGINEER
PE-044204-E

m:\struct\HoPA3777\POST_DET4.dgn
8/3/2007 2:22:57 PM

DESIGNED BY: WEM | DRAWN BY: JEG | CHECKED BY: CSC

NOISE BARRIER POST AND BASE PLATE DIMENSIONS TABLE (WIND LOAD = 28 PSF FOR HEIGHT ZONE > 4 267 (14'-0"))

				A449 ANCHOR BOLT		GALVANIZED BASE PLATE A50				REBAR REINFORCEMENT GRADE 60 STEEL			
	H	P, PH	POST SIZE (W X D X Wt)	DIA.- UNC-2A (MIN.)	** MAX. HEIGHT	WIDTH	LENGTH	* PLATE THICKNESS	EDGE DISTANCE	BAR SIZE	THREADED UNC - 2A ●	QUANTITY PER SIDE ★	STIRRUPS FROM BOT. (MIN.) ■
3 658 (12'-0") POST SPACING	2 591 (8'-6")	2 743 (9'-0")	356 X 406 X 178 (14" X 16" X 7")	19 (3/4") - 10	64 (2 1/2")	457 (18")	584 (23")	19 (3/4")	38 (1 1/2")	16 (#5)	16 (5/8) - 11	3	914 (3'-0")
	3 200 (10'-6")	3 353 (11'-0")	356 X 406 X 178 (14" X 16" X 7")	25 (1") - 8	76 (3")	457 (18")	610 (24")	22 (7/8")	51 (2")	19 (#6)	19 (3/4) - 10	3	1 524 (5'-0")
	4 115 (13'-6")	4 267 (14'-0")	356 X 406 X 178 (14" X 16" X 7")	25 (1") - 8	76 (3")	457 (18")	610 (24")	25 (1")	51 (2")	22 (#7)	22 (7/8) - 9	3	1 524 (5'-0")
	4 724 (15'-6")	4 877 (16'-0")	356 X 406 X 178 (14" X 16" X 7")	25 (1") - 8	76 (3")	457 (18")	610 (24")	29 (1 1/8")	51 (2")	25 (#8)	25 (1) - 8	3	2 134 (7'-0")
	5 334 (17'-6")	5 486 (18'-0")	356 X 406 X 178 (14" X 16" X 7")	32 (1 1/4") - 7	89 (3 1/2")	457 (18")	622 (24 1/2")	32 (1 1/4")	57 (2 1/4")	29 (#9)	29 (1 1/8) - 7	3	2 743 (9'-0")
	5 944 (19'-6")	6 096 (20'-0")	356 X 406 X 178 (14" X 16" X 7")	32 (1 1/4") - 7	89 (3 1/2")	457 (18")	622 (24 1/2")	35 (1 3/8")	57 (2 1/4")	32 (#10)	32 (1 1/4) - 7	3	3 353 (11'-0")
	6 858 (22'-6")	7 010 (23'-0")	356 X 508 X 178 (14" X 20" X 7")	32 (1 1/4") - 7	89 (3 1/2")	483 (19")	724 (28 1/2")	41 (1 5/8")	57 (2 1/4")	32 (#10)	32 (1 1/4) -7	3	3 353 (11'-0")
	7 468 (24'-6")	7 620 (25'-0")	356 X 508 X 178 (14" X 20" X 7")	38 (1 1/2") - 6	102 (4")	483 (19")	749 (29 1/2")	44 (1 3/4")	70 (2 3/4")	36 (#11)	35 (1 3/8) - 6	3	3 962 (13'-0")
	8 230 (27'-0")	8 382 (27'-6")	356 X 610 X 178 (14" X 24" X 7")	38 (1 1/2") - 6	102 (4")	508 (20")	851 (33 1/2")	44 (1 3/4")	70 (2 3/4")	25 (#8)	25 (1) - 8	6	4 267 (14'-0")
	8 687 (28'-6")	8 839 (29'-0")	356 X 660 X 178 (14" X 26" X 7")	38 (1 1/2") - 6	102 (4")	533 (21")	914 (36")	48 (1 7/8")	70 (2 3/4")	25 (#8)	25 (1) - 8	6	4 267 (14'-0")
	9 754 (32'-0")	9 906 (32'-6")	356 X 660 X 178 (14" X 26" X 7")	44 (1 3/4") - 5	114 (4 1/2")	533 (21")	927 (36 1/2")	54 (2 1/8")	76 (3")	29 (#9)	29 (1 1/8) - 7	6	5 486 (18'-0")
4 877 (16'-0") POST SPACING	2 134 (7'-0")	2 286 (7'-6")	356 X 406 X 178 (14" X 16" X 7")	19 (3/4") - 10	64 (2 1/2")	457 (18")	584 (23")	19 (3/4")	38 (1 1/2")	16 (#5)	16 (5/8) - 11	3	914 (3'-0")
	2 743 (9'-0")	2 896 (9'-6")	356 X 406 X 178 (14" X 16" X 7")	25 (1") - 8	76 (3")	457 (18")	610 (24")	22 (7/8")	51 (2")	19 (#6)	19 (3/4) - 10	3	914 (3'-0")
	3 658 (12'-0")	3 810 (12'-6")	356 X 406 X 178 (14" X 16" X 7")	25 (1") - 8	76 (3")	457 (18")	610 (24")	25 (1")	51 (2")	22 (#7)	22 (7/8) - 9	3	1 829 (6'-0")
	4 115 (13'-6")	4 267 (14'-0")	356 X 406 X 178 (14" X 16" X 7")	32 (1 1/4") - 7	89 (3 1/2")	457 (18")	622 (24 1/2")	29 (1 1/8")	57 (2 1/4")	25 (#8)	25 (1) - 8	3	2 134 (7'-0")
	4 572 (15'-0")	4 724 (15'-6")	356 X 406 X 178 (14" X 16" X 7")	32 (1 1/4") - 7	89 (3 1/2")	457 (18")	622 (24 1/2")	32 (1 1/4")	57 (2 1/4")	29 (#9)	29 (1 1/8) - 7	3	2 743 (9'-0")
	5 334 (17'-6")	5 486 (18'-0")	356 X 508 X 178 (14" X 20" X 7")	32 (1 1/4") - 7	89 (3 1/2")	483 (19")	724 (28 1/2")	38 (1 1/2")	57 (2 1/4")	29 (#9)	29 (1 1/8) - 7	3	2 743 (9'-0")
	5 944 (19'-6")	6 096 (20'-0")	356 X 508 X 178 (14" X 20" X 7")	38 (1 1/2") - 6	102 (4")	483 (19")	749 (29 1/2")	41 (1 5/8")	70 (2 3/4")	32 (#10)	32 (1 1/4) - 7	3	3 353 (11'-0")
	6 553 (21'-6")	6 706 (22'-0")	356 X 508 X 178 (14" X 20" X 7")	38 (1 1/2") - 6	102 (4")	483 (19")	749 (29 1/2")	44 (1 3/4")	70 (2 3/4")	36 (#11)	35 (1 3/8) - 6	3	3 962 (13'-0")
	7 163 (23'-6")	7 315 (24'-0")	356 X 610 X 178 (14" X 24" X 7")	38 (1 1/2") - 6	102 (4")	508 (20")	851 (33 1/2")	44 (1 3/4")	70 (2 3/4")	25 (#8)	25 (1) - 8	6	4 267 (14'-0")
	7 468 (24'-6")	7 620 (25'-0")	356 X 660 X 178 (14" X 26" X 7")	38 (1 1/2") - 6	102 (4")	533 (21")	914 (36")	48 (1 7/8")	70 (2 3/4")	25 (#8)	25 (1) - 8	6	4 267 (14'-0")
	8 382 (27'-6")	8 534 (28'-0")	356 X 660 X 178 (14" X 26" X 7")	44 (1 3/4") - 5	114 (4 1/2")	533 (21")	927 (36 1/2")	54 (2 1/8")	76 (3")	29 (#9)	29 (1 1/8) - 7	6	5 182 (17'-0")
6 096 (20'-0") POST SPACING	1 981 (6'-6")	2 134 (7'-0")	356 X 406 X 178 (14" X 16" X 7")	19 (3/4") - 10	64 (2 1/2")	457 (18")	584 (23")	19 (3/4")	38 (1 1/2")	16 (#5)	16 (5/8) - 11	3	914 (3'-0")
	2 438 (8'-0")	2 591 (8'-6")	356 X 406 X 178 (14" X 16" X 7")	25 (1") - 8	76 (3")	457 (18")	610 (24")	22 (7/8")	51 (2")	19 (#6)	19 (3/4) - 10	3	914 (3'-0")
	3 200 (10'-6")	3 353 (11'-0")	356 X 406 X 178 (14" X 16" X 7")	25 (1") - 8	76 (3")	457 (18")	610 (24")	29 (1 1/8")	51 (2")	22 (#7)	22 (7/8) - 9	3	1 829 (6'-0")
	3 658 (12'-0")	3 810 (12'-6")	356 X 406 X 178 (14" X 16" X 7")	32 (1 1/4") - 7	89 (3 1/2")	457 (18")	622 (24 1/2")	32 (1 1/4")	57 (2 1/4")	25 (#8)	25 (1) - 8	3	2 134 (7'-0")
	4 115 (13'-6")	4 267 (14'-0")	356 X 406 X 178 (14" X 16" X 7")	32 (1 1/4") - 7	89 (3 1/2")	457 (18")	622 (24 1/2")	35 (1 3/8")	57 (2 1/4")	29 (#9)	29 (1 1/8) - 7	3	2 743 (9'-0")
	4 572 (15'-0")	4 724 (15'-6")	356 X 406 X 178 (14" X 16" X 7")	38 (1 1/2") - 6	102 (4")	457 (18")	648 (25 1/2")	38 (1 1/2")	70 (2 3/4")	32 (#10)	32 (1 1/4) - 7	3	3 048 (10'-0")
	5 334 (17'-6")	5 486 (18'-0")	356 X 508 X 178 (14" X 20" X 7")	38 (1 1/2") - 6	102 (4")	483 (19")	749 (29 1/2")	41 (1 5/8")	70 (2 3/4")	32 (#10)	32 (1 1/4) - 7	3	3 353 (11'-0")
	5 791 (19'-0")	5 944 (19'-6")	356 X 508 X 178 (14" X 20" X 7")	38 (1 1/2") - 6	102 (4")	483 (19")	749 (29 1/2")	44 (1 3/4")	70 (2 3/4")	36 (#11)	35 (1 3/8) - 6	3	3 962 (13'-0")
	6 248 (20'-6")	6 401 (21'-0")	356 X 610 X 178 (14" X 24" X 7")	38 (1 1/2") - 6	102 (4")	508 (20")	851 (33 1/2")	48 (1 7/8")	70 (2 3/4")	25 (#8)	25 (1) - 8	6	3 962 (13'-0")
	7 468 (24'-6")	7 620 (25'-0")	356 X 660 X 178 (14" X 26" X 7")	44 (1 3/4") - 5	114 (4 1/2")	533 (21")	927 (36 1/2")	54 (2 1/8")	76 (3")	29 (#9)	29 (1 1/8) - 7	6	4 877 (16'-0")

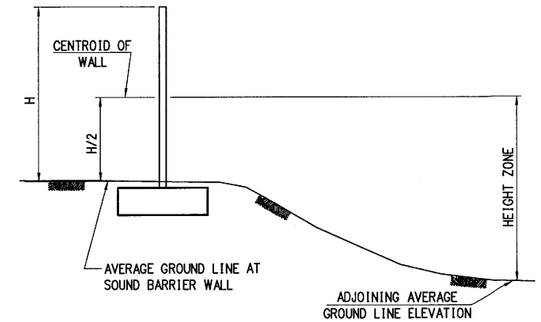

HEIGHT ZONE DETERMINATION
N.T.S.

LEGEND & NOTES

P = POST HEIGHT. FOR POST HEIGHTS THAT FALL BETWEEN THE VALUES LISTED, USE THE VALUES FOR THE NEXT LARGER HEIGHT.
PH = PANEL HEIGHT = POST HEIGHT - 25 (1")
W = POST WIDTH
D = POST DEPTH
Wt = WEB THICKNESS
H = POST DESIGN HEIGHT (MEASURED FROM TOP OF POST TO TOP OF FINISHED GROUND THIS TABLE IS DESIGNED FOR HEIGHT ZONES OVER 4 267 (14'-0").

* TOLERANCE IS +6/-1 (+.25/-.04)

** SEE "ANCHOR DETAIL" ON POST DETAIL-1 SHEET.

★ DENOTES TOTAL MAIN REINFORCEMENT IN EACH FLANGE OF POST. FOR REINFORCEMENT LAYOUT, SEE POST REINFORCEMENT DETAIL -1 TO -4 ON SHEET 3.

■ STIRRUPS TO BE PLACED AT 152 (6") MAX. ON CENTER, ABOVE THIS HEIGHT STIRRUPS TO BE PLACED AT 305 (12") MAX. ON CENTER.

● THREADS SHALL BE ROLLED AND MEET THE REQUIREMENTS OF ANSI B1.1
USE ASTM A194 PLAIN HEAVY HEX NUTS (GR.2H) WITH UNC THREADS.
USE ASTM F436 GALVANIZED HARDEN FLAT WASHERS
APPLY COATING TO THREADED ENDS OF REINFORCEMENT PRIOR TO PLACING NUT PER PENNDOT DEPARTMENT OF TRANSPORTATION PUBLICATION 408/2003 1060.3 (c) 4.

ALL NUTS SHALL BE SNUG TIGHTENED IN ACCORDANCE WITH PENNDOT SPECIFICATION 408 (2003) 1050.3 (c) 7.

UPON COMPLETION OF TIGHTENING, A COATING SHALL BE APPLIED TO ALL EXPOSED SURFACES OF WASHERS, NUTS AND REBARS, PER PENNDOT PUBLICATION 408/2003 1060.3 (c) 4

CAISSIONS AND SPREAD FOOTING BY OTHERS.

POST - 28 DAY STRUCTURAL DESIGN COMPRESSIVE STRENGTH = 34.47 MPa (5000 PSI)
- 28 DAY MINIMUM MIX DESIGN COMPRESSIVE STRENGTH = 39.6 MPa (5750 PSI)
- ALL POSTS USE ONE 35.6 kN (4 TON) LIFTING ANCHOR, EXCEPT 660 (26") DEEP POST USE ONE 71.2 kN (8 TON) LIFTING ANCHOR

Mark	Description	By	Chk'd	Recm'd	Date
	REVISIONS				

JAN. 17, 2008 **DRAWING NO. PADOT #91-245-PE(2)**

HANSON PIPE & PRECAST
Pottstown, PA

NOISE BARRIER DETAILS

3658 (12'-0"), 4877 (16'-0") & 6096 (20'-0") POST SPACING

BASED ON

PENNSYLVANIA DEPARTMENT OF TRANSPORTATION SPECIFICATIONS

POST DETAILS - 5

COMMONWEALTH OF PENNSYLVANIA
REGISTERED PROFESSIONAL
CRAIG SCOTT CAMPBELL
ENGINEER
PE-044204-E

SHT. 6 OF 6

m:\struct\HePA3777\POST_DET5.dgn
8/3/2007 2:24:11 PM

DESIGNED BY: WEM | DRAWN BY: JEG | CHECKED BY: CGC

Product:

Concrete Innovations Services
Whisper Wall Absorptive Precast Sound Barrier
Standard Drawings
PENNDOT Drawing #2007-040Q

Approval Date: **Initiated By SOL:**

January 17, 2008 431-08-01

Application/Use:

Whisper Wall Absorptive Precast Sound Barriers manufactured by Concrete Innovations Services, 4215 Lafayette Center Suite 1-A, Chantilly, VA 20151 (Telephone No. 703-222-9702), have been approved for use as an "**alternate"** or "**as-designed"** Sound Barrier.

Specifications:

Attached is a copy of the Design/Material/Construction Specifications specified on the Standard Detail Drawings PENNDOT Drawing #2007-040Q dated January 9, 2008 for Whisper Wall Absorptive Precast Sound Barrier for your use.

Standard Drawing:

Attached is a copy of the Standard Detail Drawing dated December 18, 2007 of Whisper Wall Absorptive Precast Sound Barrier for your use.

Comment:

On those projects permitting the use of this system as an alternate, a special provision should be included in the proposal to indicate that the "Whisper Wall Absorptive Precast Sound Barrier" as an alternate is allowed.

The contractor will be required to revise the pertinent contract drawings as per DM-4M, PP 1.10 to show the usage of "Whisper Wall Absorptive Precast Sound Barrier" and will also be required to reimburse the Department a fee of $1000 per design for the review and approval of the revision. This should be specified in the contract's Special Provision.

FHWA approval has been secured for Whisper Wall Absorptive Precast Sound Barrier system.

GENERAL NOTES:

See BC-776M, BC-777M, BC-778M, BC-779M / BD-676M, BD-677M, BD-678M and BD-679M for additional details not shown.

Panels must be lifted from the vertical position only.

Provide shop drawings in accordance with Section 105.02(d) of Publication 408.

Apply anti-graffiti paint to exposed surfaces in the field where indicated or specified.

Measurement and payment in accordance with Section 1086 of Publication 408.

Provide certification as per Section 106.03(b)3.

Weight of absorptive material + 6lbs./s.ft. per inch

Weight of WHISPER-WALL panel including structural concrete = 4.7KN/SQ.M (98PSF)

Rejection – Reject individual precast concrete panel for any of the following and as determined by the Engineer:

a. Fracture or crack opening over 0.007 inch on the wall panel per PCI Design Handbook Section 5.2.4.2., Chapter 5.
b. Defects that indicate proportioning, mixing and molding not in compliance with the specification, as specified or indicated.
c. Honeycombed open texture (exclusive of absorptive material).
d. Damaged ends where such damage would prevent making a satisfactory joint.
e. Twenty-eight (28) day compressive strength is less than design strength of concrete.
f. Dimensions not conforming to the allowable tolerances specified.

Mark the rejected precast panel "Rejected for the Department's Use." with waterproof point. Repair and repair procedures require approval by the engineer.

Technical Assistance–

Have a trained representative present at the project site during erection procedures to assist the contractor and Engineer full time for the first five days and then as needed for the duration of construction. Provide a technical representative to assist in the event unusual problems or special circumstances arise.

All Dimensions are in millimeters unless otherwise noted. U.S. customary units in ( ) parenthesis.
All "DESIGN" metric units indicated are soft converted from u.s. customary units.
Design Specifications:
PENNDOT Design Manual Part 4, Structures.
1989 AASHTO "Guide Specifications for Structural Design of Sound Barriers", including the 1992 and 2002 Interims.
1992 AASHTO "Standard Specification for Highway Bridges", 15th Edition, including the 1993 and 1994 Interims.
2001 AASHTO "Standard Specifications for Structural Supports for highway sign, luminaries and Traffic Signals", 4th Edition, including the 2002 and 2003 Interims.
Design is in accordance with the working stress design method. (no increase in allowable unit stresses are permitted except for group (3) loadings which permits a 33% overstress.)
Construction specifications and workmanship:
Provide materials and perform work in accordance with the current version of the Pennsylvania Department of Transportation Publication 408, AASHTO/ABS/D1.5M/D1.5 2002 – bridge welding code and the contract special provisions. (use AWS/D1, 1/D1.1M 2002 for welding not covered in AASHTO/AWS/D1.5M/D1.5 2002.

Provide epoxy coated or galvanized reinforcement bars in the posts and pedestals where the wall is within 4.3m (14' – 0") of the edge of travel lane. Epoxy coated or galvanized reinforcement may be required if future widening is anticipated.

All dimensions shown are horizontal, except as noted. Dimensions shown are for a normal temperature of 20 degrees c (68 degrees F).

Erection Tolerances:

a. Vertical Alignment

Height of Wall	Vertical Alignment of Walls and Posts
<=3.0m (10ft)	6mm (1/4-inch)
<=6.0m (20 ft)	12mm (1/2-inch)
<=6.0m (20 ft)	20mm (3/4-inch)

b. Horizontal Alignment. Horizontal alignment for walls and posts to be within 12mm (1/2-inch) of the indicated location.
c. Posts. Set posts within ± 12mm (1/2-inch) of the indicated location.
d. Post Rotation. Set orientation of post within ± 2 degrees of the indicated location.
e. Anchor Bolts. Set anchor bolts within ± 6mm (1/4-inch) of the indicated location.
f. Top of Barrier, Wall, Caisson, Footings, Pedestals and Raised Panel Seat Elevations. Set elevations within ± 12mm (1/2-inch) of the indicated location.
g. Grout Depth under Base Plate. Set grout depth within ± 6mm (1/4-inch) of the indicated thickness.

MATERIAL NOTES:

CONCRETE: As per Section 714 and 1086
a. Structural concrete portion shall have f'c = 35MPa (5,000psi) or 40MPa (6,000psi) at 28 days as noted in plans.
b. Absorptive WHISPER-WALL concrete portion shall be as per the patented mix design.
REINFORCING: As per 714 and 1086
a. Reinforced Steel: ASTM A615, Grade 60 (420)
b. Welded wire fabric (WWF) reinforcement shall meet the requirements of ASTM A-185.
c. Coatings, if required, as per 709, 714 and 108
JOINT MATERIAL: Joint sealer material as specified, Section 705.8.
TOLERANCES:

Panels:	Height	+/- 6mm (¼")
	Length	+/- 6mm (¼")
	Thickness	+/- 6mm (¼")

Out of Flatness:

Lengths to 2.5m (8ft.):	3mm (⅛")
Lengths over 2.5m (8ft.):	6mm (¼")

ARCHITECTUAL TREATMENT

FINISHES:
The following architectural surface treatments are permitted on the face of the precast concrete panels as indicated on the contract drawings or in the contract special provisions:

Non-form liner finishes:	smooth finish
	broomed finish
	fuzzy or raked finish (permitted on one side only)
	exposed aggregate
Form liner finishes:	Ashlar Stone
	CPS Fractured Finish

If a smooth architectural surface treatment is provided, the treatment may extend to the edges of panels as long as the panel fits between the flanges of the post.

Stamped finishes may be permitted if accepted by the district bridge engineer.

The architectural surface treatment pattern must "line-up" and be uninterrupted when using stacked panels.

ANCHOR BOLTS, NUTS AND WASHERS:
Provide anchor bolts conforming to ASTM F1554, Grade 25D (36) in accordance with publication 408, section 1105, 021ci 3.
Provide heavy Hex Nuts conforming to ASTM A563M (A563A) in accordance with publication 408, section 1105, 021ci 3c.
Provide oversize washers conforming to AASHTO M270M (M270) Grade 250 (36) [ASTM A709M (A709), GRADE 250 (36)].
Provide lock washers and flat washers conforming to ASTM F436M IF4361 in accordance with Publication 408, Section 1105.021 ci 3c.
Galvanize all anchor bolts and hardware in accordance with Publications 408 Section 1105.021.

DESIGN NOTES:

CONSTRUCTION SPECTIFICATIONS FOR PRECAST ABSORPTIVE SOUND BARRIERS (PANELS).
THIS WORK IS THE CONSTRUCTION OF WHISPER-WALL SOUND ABSORPTIVE PANELS AS PRECAST UNDER LICENSE FROM CONCRETE INNOVATIONS.

Provide materials and workmanship in accordance with PA DOT Specifications Publication 408, BD-676M, BD-679M, BC-776M, BC-779M and the Contract's Special Provisions.

DESIGN SPECIFICATIONS:
Design Division I of 1992 AASHTO " Standard Specifications for Highway Bridges" (including approved Interim) and as supplemented by PA DOT Design manual Part 4 (including revisions).

DESIGN LOADS:
As per BD-676M and BD-679M
Wind Load = 28 psf [1.34KPa]
Ice Load = 3 psf [0.14KPa] (applied to one side of panel)
Seismic Load: Seismic acceleration Coefficient "A" equal to 0.15.

CONSTRUCTION:
As per 1086.3 and as indicated on the design contract drawings and approved shop drawings and as follows:

a. Shop Drawings – before beginning construction submit for approval, shop drawings showing fabrication details, and handling, transportation, construction procedures for all wall elements including connections.
b. Installation Requirements – Section 1086.3 (c) and as follows:

FABRICATION:
Fabricate the precast panels in an approved plant in accordance with the approved drawings, approved quality control plan and Section 1086.3 (a)2 and Section 714. Fabricate sample wall by the same process that will be used for all production. Panels not conforming to the approved test sample will be rejected. WHISPER-WALL Absorptive material will be as per patented process. Approved sample panels may be incorporated into the project.

FOUNDATIONS:
BD-677M, BD-678M, BC-778M and Section 1086.2 (f) – by OTHERS

POSTS:
Utilize the information on the following standard sheets BD-677M, BD-678M, BC-777M, BC-778M and Section 1086.2 (a), with the following changes:
Steel Posts:
For 28 psf Wind Load, 20' panel span, post height =10', use W8X40 post.
For 28psf Wind Load make the following base plate changes:

Post Spacing(ft)	Post Height(ft)	Base Plate Thickness
12	12	32mm (1¼")
12	16	38mm (1½")
16	8	25mm (1")
20	6	22mm (⅞")

For 20 psf Wind Load, 16' panel span, post height =12', use W8X40 post.
For 20 psf Wind Load, 16' panel span, post height =16', use W10X60 post.
For 20 psf Wind Load, 20' panel span, post height =18', use W10X100 post.
For 28psf Wind Load make the following base plate changes:

Post Spacing(ft)	Post Height(ft)	Base Plate Thickness
20	12	35mm (1⅜")
20	22	51mm (2")
20	24	54mm (2⅛")

Design Notes Continued on Next Page

PENNSYLVANIA DEPARTMENT OF TRANSPORTATION RECOMMENDED
Thomas P. Macioce
CHIEF BRIDGE ENGINEER

COMMONWEALTH OF PENNSYLVANIA REGISTERED PROFESSIONAL ENGINEER DAN J. HOTEK PE-071597

PENNDOT DRAWING # 2007-040Q			JAN. 17, 2008
REVISION	DATE	DESCRIPTION	ABSORPTIVE PRECAST SOUND BARRIER WALL PANELS
Whisper Wall 4215 LAFAYETTE CENTER, SUITE 1-A, CHANTILLY, VA 20151			CONTRACTOR:
PROJECT: ABSORPTIVE PRECAST SOUND BARRIER			DESIGNED BY: DJH / SCALE: AS NOTED / REV: –
DRAWING TITLE: PRECAST PANEL NOTES			DRAWN BY: EJH / DATE: 12/18/07 / SHEET NO. 1 OF 5

DESIGN NOTES (continued):

Concrete Posts:

Type A

For 20 psf Wind Load, 12' panel span, post height =18', use 4-22ø(#7).
For 20 psf Wind Load, 12' panel span, post height =24', use 4-29ø(#9).
For 20 psf Wind Load, 16' panel span, post height =18', use 4-25ø(#8).
For 20 psf Wind Load, 20' panel span, post height =14', use 4-22ø(#7).
For 20 psf Wind Load, 20' panel span, post height =16', use 4-25ø(#8).
For 20psf Wind Load make the following base plate changes:

Post Spacing(ft)	Post Height(ft)	Base Plate Thickness
12	16	32mm ($1\frac{1}{4}$")
16	20	51mm (2")
20	10	25mm (1")

For 28 psf Wind Load, 12' panel span, post height =20', use 4-29ø(#9).
For 28psf Wind Load make the following base plate changes:

Post Spacing(ft)	Post Height(ft)	Base Plate Thickness
12	16	38mm ($1\frac{1}{2}$")
16	8	22mm ($\frac{7}{8}$")
20	12	38mm ($1\frac{1}{2}$")
20	14	44mm ($1\frac{3}{4}$")
20	15	48mm ($1\frac{7}{8}$")

Type C

For 20 psf Wind Load, 12' panel span, post height =26', use 4-29ø(#9).
For 20 psf Wind Load, 16' panel span, post height =20', use 4-25ø(#8).
For 20 psf Wind Load, 20' panel span, post height =20', use 4-29ø(#9).
For 20psf Wind Load make the following base plate changes:

Post Spacing(ft)	Post Height(ft)	Base Plate Thickness
12	24	41mm ($1\frac{5}{8}$")
12	26	44mm ($1\frac{3}{4}$")
16	26	54mm ($2\frac{1}{8}$")
20	18	41mm ($1\frac{5}{8}$")
20	22	51mm (2")

For 28 psf Wind Load, 16' panel span, post height =24', use 4-35ø(#11).
For 28psf Wind Load make the following base plate changes:

Post Spacing(ft)	Post Height(ft)	Base Plate Thickness
20	12	32mm ($1\frac{1}{4}$")

ACOUSTIC PERFORMANCE SPECIFICATIONS FOR PRECAST CONCRETE PANELS

SOUND ABSORPTION PANELS:

Noise reduction coefficient (nrc):
Fabricator must submit four copies of independent laboratory test results which show that the sound abatement panels achieve a nrc of 0.70 or greater as measured in accordance with ASTM C423-02 to the engineer for acceptance.

Sound absorption panels must be pre-approved by PADOT using the new product evaluation process.

12/18/07
COMMONWEALTH OF PENNSYLVANIA
REGISTERED PROFESSIONAL
DAN J. HOTEK
ENGINEER
PE-071197

PENNDOT DRAWING # 2007-040Q			JAN. 17, 2008		
REVISION	DATE	DESCRIPTION	ABSORPTIVE PRECAST SOUND BARRIER WALL PANELS		
Whisper Wall 4215 LAFAYETTE CENTER, SUITE 1-A, CHANTILLY, VA 20151			CONTRACTOR:		
PROJECT: ABSORPTIVE PRECAST SOUND BARRIER			DESIGNED BY: DJH	SCALE: AS NOTED	REV: -
DRAWING TITLE: PRECAST PANEL NOTES			DRAWN BY: EJH	DATE: 12/18/07	SHEET NO. 2 OF 5

PRECAST CONCRETE PANEL

Whisper Wall

CASE	Hpanel ft.	Lpanel ft.	ts in.	tp in.	f'c psi	WH size	SH in.	WV size	SV in.	Number & Size Lifting Anchors	EDGE SECTION
A	8	12	5	10.5	5000	W12	6	W10	4	4 - 2T	B5
B	7	12	5	10.5	5000	W12	6	W7	4	4 - 2T	B5
C	6	12	5	10.5	5000	W12*	6	W5	4	4 - 2T	B5
D	8	16	5	10.5	5000	W16	4	W10	4	4 - 2T	B5
E	7	16	5	10.5	5000	W16	4	W7	4	4 - 2T	B5
F	6	16	5	10.5	5000	W16	4	W5	4	4 - 2T	B5
G	8	20	6	11.5	6000	W22	4	W10	4	4 - 4T	B6
H	7	20	6	11.5	6000	W22	4	W7	4	4 - 2T	B6
I	6	20	6	11.5	6000	W22	4	W5	4	4 - 2T	B6

*(4) 10 ϕ – (#3) REBAR @ 18" O.C. HORIZONTAL, IN ADDITION TO WWF, FOR CASE C.

ts = structural panel thickness
tp = total panel thickness
f'c = 28 day compressive strength of concrete
WH = Horizontal wire size for WWF reinforcemennt
SH = Horizontal wire spacing for WWF reinforcemennt
WV = Vertical wire size for WWF reinforcemennt
SV = Vertical wire spacing for WWF reinforcemennt

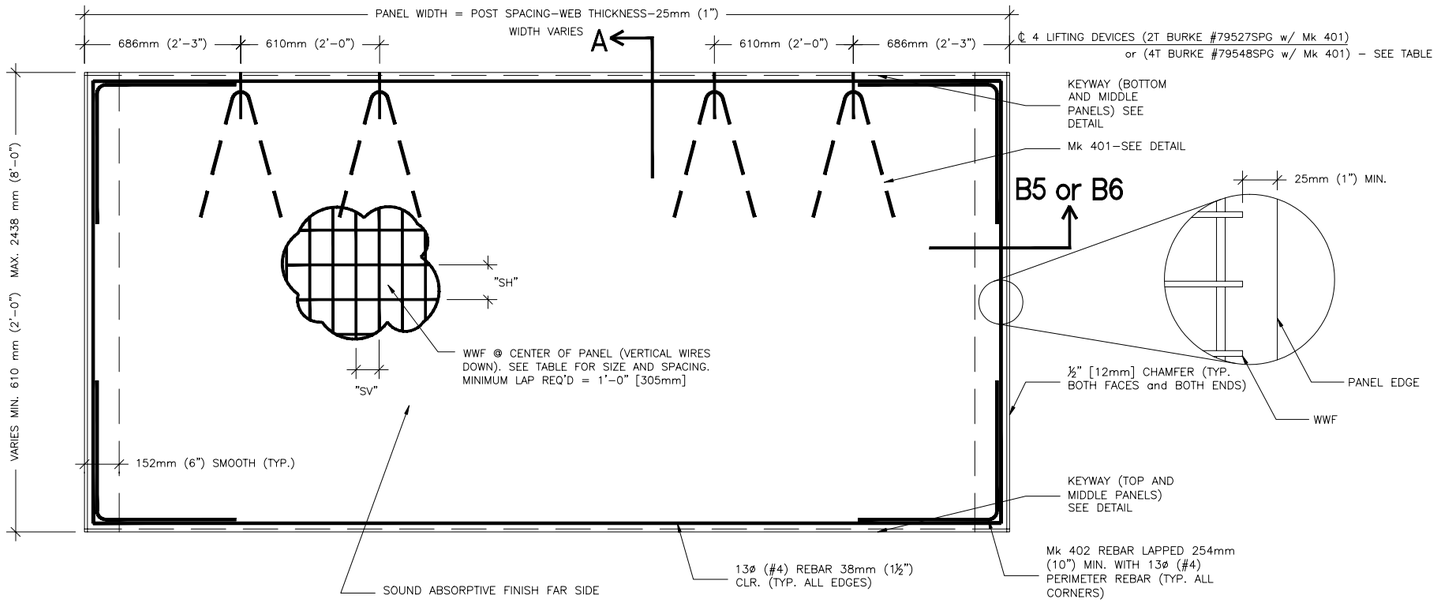

CASTING VIEW FOR BOTTOM MIDDLE & TOP PANELS

SCALE: 1" = 1'–0"

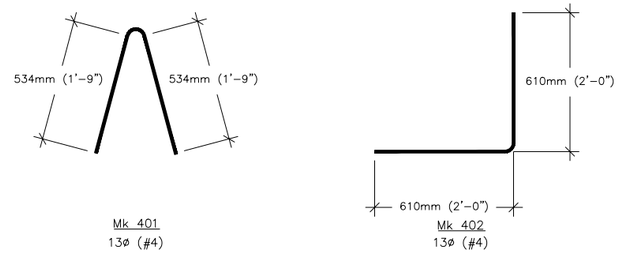

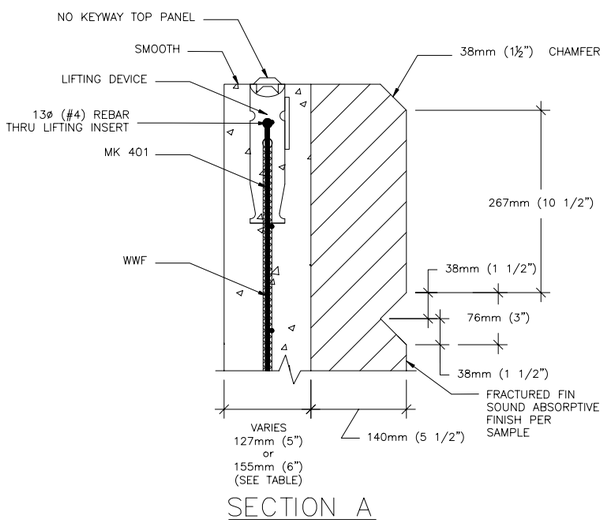

SECTION A

SCALE: 3" = 1'–0"

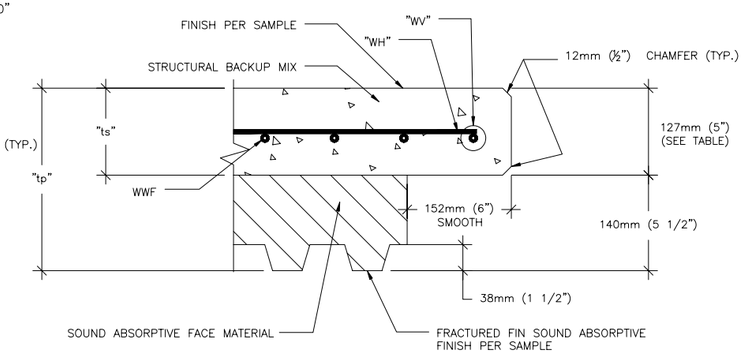

SECTION B5

SCALE: 3" = 1'–0"

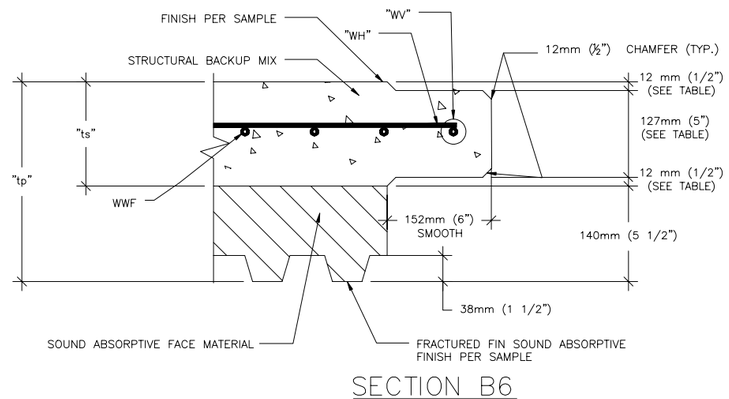

SECTION B6

SCALE: 3" = 1'–0"

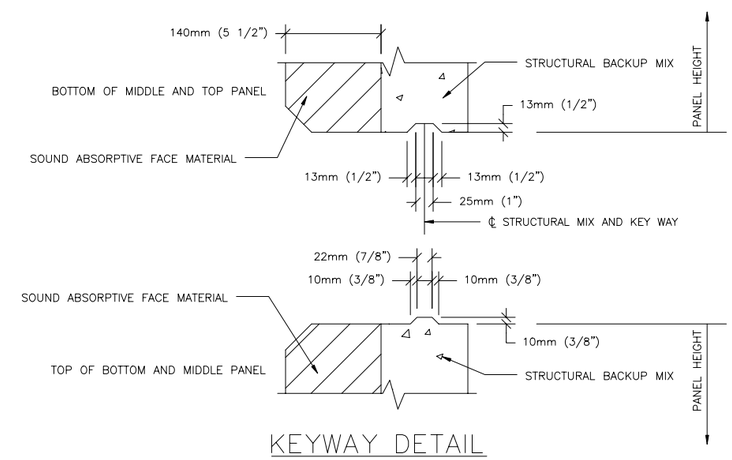

KEYWAY DETAIL

SCALE: 3" = 1'–0"

NOTES:

- WORK TO CONFORM TO PENNDOT SPECIFICATIONS.
- CONCRETE STRENGTH TO BE **AS NOTED ON DESIGN SUMMARY** AT 28 DAYS.
- CONCRETE STRENGTH TO BE 3500PSI FOR f'c=5000PSI PANELS PRIOR TO LIFTING.
- CONCRETE STRENGTH TO BE 4200PSI FOR f'c=6000PSI PANELS PRIOR TO LIFTING.
- WWF AND REBAR TO BE AS PER PENNDOT SPECIFICATIONS.
- TENSION BARS TO BE Mk 401.
- STORE AND SHIP PANELS ON EDGE WITH BLOCKING AT LIFTING INSERT LOCATIONS.
- COLOR AND TEXTURE PER APPROVED SAMPLE.

12/18/07
COMMONWEALTH OF PENNSYLVANIA
REGISTERED PROFESSIONAL ENGINEER
DAN J. HOTEK
ENGINEER
PE-031997

PENNDOT DRAWING # 2007–040Q

JAN. 17, 2008

REVISION	DATE	DESCRIPTION

ABSORPTIVE PRECAST SOUND BARRIER WALL PANELS

Whisper Wall
4215 LAFAYETTE CENTER, SUITE 1–A, CHANTILLY, VA 20151

CONTRACTOR:

PROJECT:	DESIGNED BY:	SCALE:	REV:
ABSORPTIVE PRECAST SOUND BARRIER	DJH	AS NOTED	–
DRAWING TITLE: PRECAST PANEL DETAILS	DRAWN BY: EJH	DATE: 12/18/07	SHEET NO. 3 OF 5

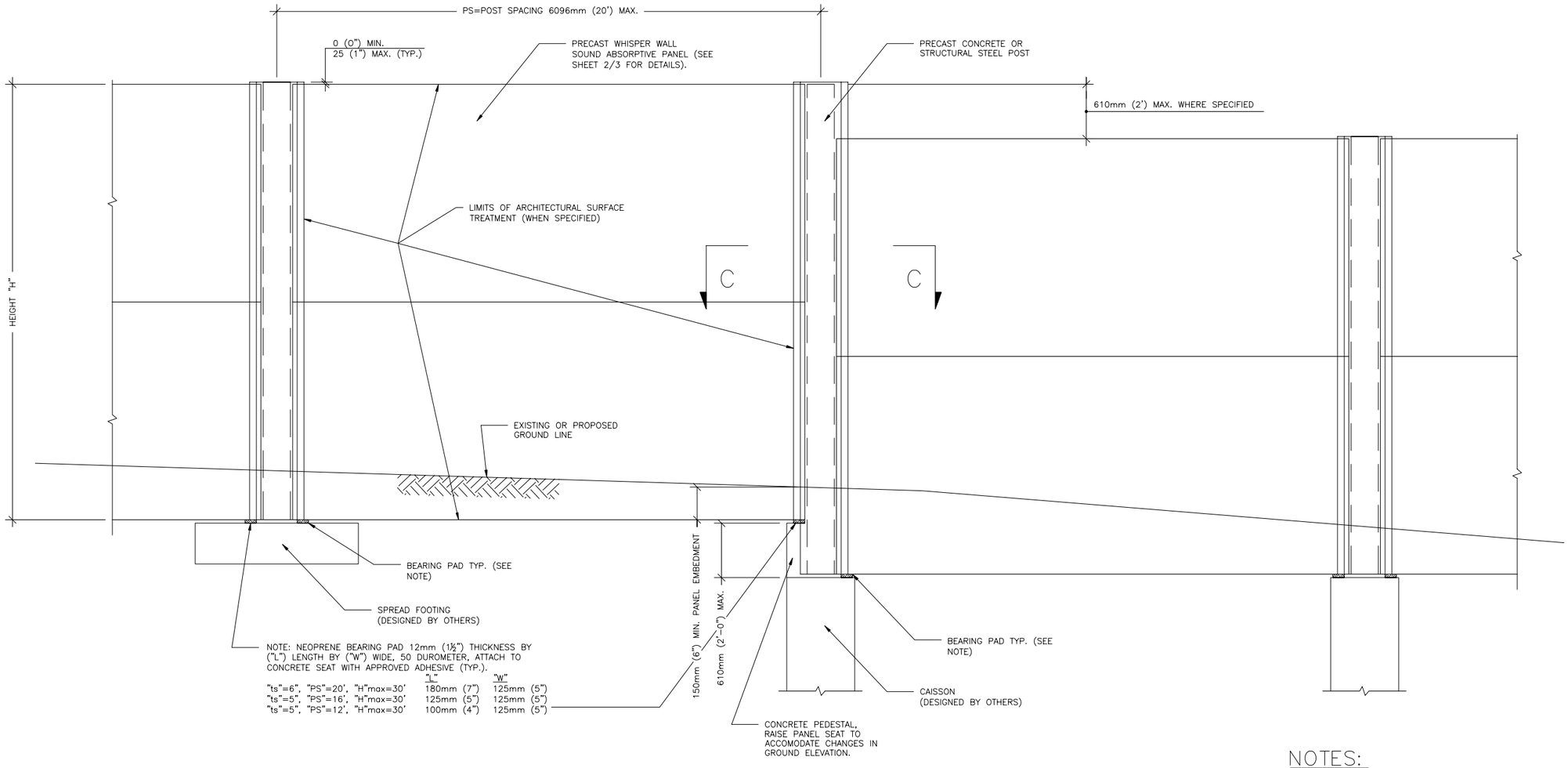

NOTE: NEOPRENE BEARING PAD 12mm (1½") THICKNESS BY ("L") LENGTH BY ("W") WIDE, 50 DUROMETER, ATTACH TO CONCRETE SEAT WITH APPROVED ADHESIVE (TYP.).

	"L"	"W"
"ts"=6", "PS"=20', "H"max=30'	180mm (7")	125mm (5")
"ts"=5", "PS"=16', "H"max=30'	125mm (5")	125mm (5")
"ts"=5", "PS"=12', "H"max=30'	100mm (4")	125mm (5")

GROUNT MOUNTED ELEVATION

SCALE: ½" = 1'-0"

NOTES:

- WORK TO CONFORM TO PENNDOT SPECIFICATIONS.
- WORK THIS DRAWING WITH PENNDOT STANDARD DRAWINGS BC-777M & BD-677M FOR CONCRETE POSTS AND BC-778M & BD-678M FOR STEEL POSTS.
- UTILIZE PENNDOT STANDARDS FOR CONCRETE AND STEEL POSTS
- FOR CONCRETE POSTS USE TYPES A AND C, DETAILS 1 & 2 .
- REFER TO SHEET 2/3 FOR PANEL DETAILS.
- SEE POST DETAIL 5 AND 6 FOR THE ANGLED PANEL WALLS.

12/18/07
COMMONWEALTH OF PENNSYLVANIA
REGISTERED PROFESSIONAL ENGINEER
DAN J. HOTEK
PE-21159

PENNDOT DRAWING # 2007-040Q

JAN. 17, 2008

REVISION	DATE	DESCRIPTION

ABSORPTIVE PRECAST SOUND BARRIER WALL PANELS

Whisper Wall
4215 LAFAYETTE CENTER, SUITE 1-A, CHANTILLY, VA 20151

CONTRACTOR:

PROJECT:	DESIGNED BY:	SCALE:	REV:
ABSORPTIVE PRECAST SOUND BARRIER	DJH	AS NOTED	–
DRAWING TITLE: GEOMETRY AND LAYOUT	DRAWN BY: EJH	DATE: 12/18/07	SHEET NO. 4 OF 5

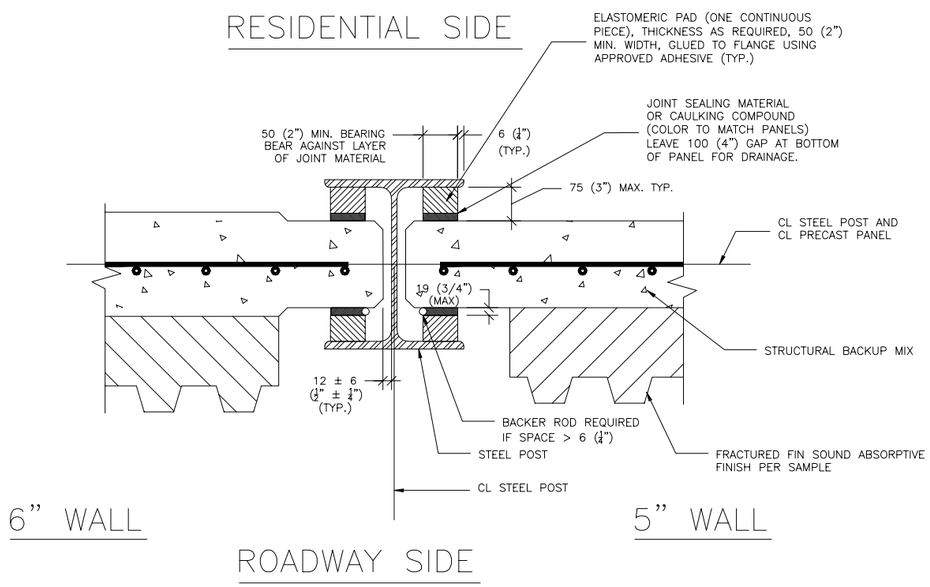

SECTION C–C (STEEL POST)
SCALE: 3" = 1'–0"

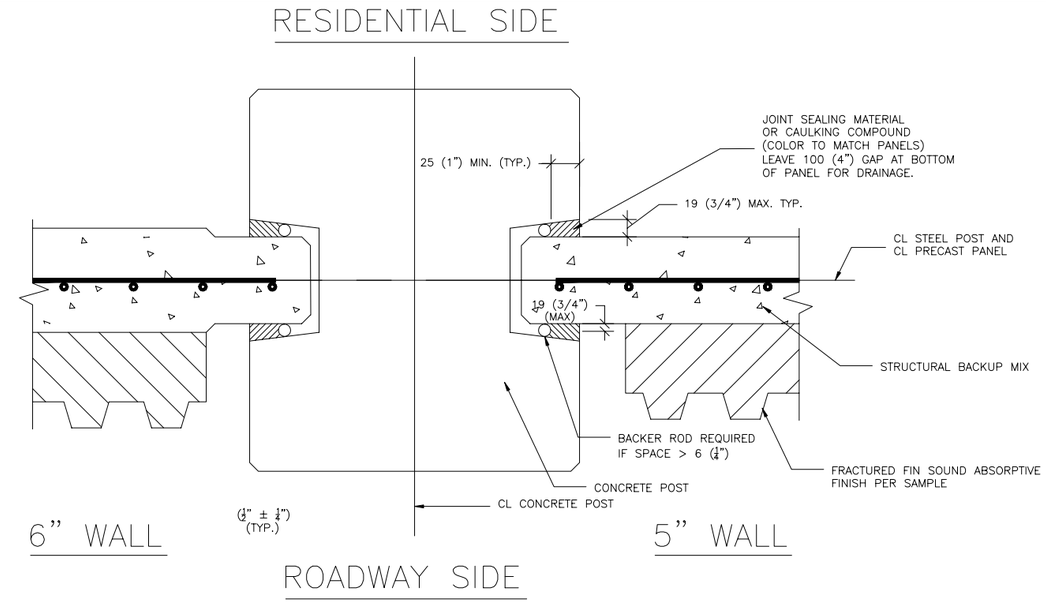

SECTION C–C (CONCRETE POST)
SCALE: 3" = 1'–0"

12/18/07
COMMONWEALTH OF PENNSYLVANIA
REGISTERED PROFESSIONAL
DAN J. HOTEK
ENGINEER
PE-071197

PENNDOT DRAWING # 2007–040Q

JAN. 17, 2008

REVISION	DATE	DESCRIPTION

ABSORPTIVE PRECAST SOUND BARRIER WALL PANELS

Whisper Wall
4215 LAFAYETTE CENTER, SUITE 1–A, CHANTILLY, VA 20151

CONTRACTOR:

PROJECT: ABSORPTIVE PRECAST SOUND BARRIER

DRAWING TITLE: GEOMETRY AND LAYOUT

DESIGNED BY:	SCALE:	REV:
DJH	AS NOTED	–
DRAWN BY:	DATE:	SHEET NO.
EJH	12/18/07	5 OF 5

Product

Diamond Manufacturing Company
AcoustaX w/ NEPCOAT Paint System, Aluminum Panel, Structure Mounted
Special Provision and Standard Drawing
PennDOT Drawing #2002-130PE
Item 9000-7024

Approval Date:	Initiated By SOL:
September 25, 2008	431-08-15

Application/Use:

AcoustaX with its absorptive painted perforated aluminum sound barrier system manufactured by Diamond Manufacturing Company, 243 W. Eight St., Wyoming, PA 18644 (Telephone No. 800-233-9601), has been approved for use as an "alternate" or "as-designed" Sound Barrier. AcoustaX can be used as a structure mounted sound barrier wall requiring sound absorption. This system can be used for either absorptive or reflective sound barrier applications.

Specifications:

Attached is a copy of the Design/Material/Construction Specifications specified on the Standard Detail Drawing, PennDOT Drawing #2002-130PE, dated September 25, 2008, for AcoustaX w/ NEPCOAT Paint System, Aluminum Panel, Structure Mounted Sound Barrier Panel system.

Standard Drawing:

Attached is a copy of the Standard Detail Drawing, dated September 25, 2008, for the AcoustaX absorptive sound barrier system for your use.

Comment:

On those projects permitting the use of this system as an alternate, a special provision should be included in the proposal to indicate that the "AcoustaX Absorptive Sound Barrier" as an alternate is allowed.

The contractor will be required to revise the pertinent contract drawings as per DM-4M, PP 1.10 to show the usage of "AcoustaX Absorptive Sound Barrier" and will also be required to reimburse the Department a fee of $1000 per design for the review and approval of the revision. This should be specified in the contract's Special Provision.

FHWA approval has been secured for the AcoustaX sound barrier system.

SECTION 1

DESIGN SPECIFICATION FOR ACOUSTAX WITH NEPCOAT PAINT SYSTEM, ALUMINUM PANEL, STRUCTURE MOUNTED

1. GENERAL:
   a. Diamond Manufacturing Company's representative, Faddis Concrete Products, will provide AcoustaX design calculations and contract drawings for prefabricated absorptive sound barrier panels. Post, hardware fabrication, retaining wall and traffic barrier by others are to be in accordance with PA DOT requirements. Design procedures or permissible variation other than those contained herein are not permitted unless pre-approved by the Chief Bridge Engineer.
   b. Diamond Manufacturing Company's representative, Faddis Concrete Products, takes full responsibility of AcoustaX Sound Barrier Panels, engineering theory and calculation correctness, and ensuing documents, either by needed details or construction specifications.
   c. The Sound Barrier shall consist of stacked, perforated metal panels. The panels shall be comprised of aluminum sheet metal filled with mineral fiber planks. Individual panels shall be acoustically sealed with a bead of caulk placed along the length of each panel at the panel seam. The panels shall be lifted and placed by hand into the supporting posts to the wall design height.

2. DESIGN AND CONSTRUCTION PHASE DESIGN SUBMISSIONS:
   a. Secure District Bridge and Environmental Engineer's approval before incorporating AcoustaX Sound Barrier Panels in any project.
   b. Provide at no expense to the Department, four (4) sets (three to the District and one set to Central Office, Bridge Division) of construction drawings 559 x 864 (22" x 34"), calculations, erection methods, and detailed erection plans for approval. Provide approved drawings using Department drafting standards. Show a valid signature in ink, the date signed, a business name, and business address on the first sheet, and facsimile of all other drawings of the design drawings. On the first sheet of the construction drawings, indicate, "I certify that all assumptions made in designing these sound barrier wall panels have been validated either through construction details or special notes and instructions to the fabricator, erector and contractor." Place the statement above the P.E. seal. The District Bridge or District Engineer will sign the final plans.
   c. On the first sheet of computations show a Professional Engineer's Seal (licensed in Pennsylvania), signature and date signed. Also, certify that all of the assumptions made in designing the sound barrier wall have been validated through either the design details on the drawing or in the construction specifications.
   d. Panel Design Loads:
      Wind Load, Structure Mounted = 1.77 kPa (37 psf)
      Ice Load = 0.14 kPa (3 psf) (applied to one side of the panel)
   e. In the event that certain design parameters, stresses, or specifications are in conflict, the following order of predominance governs:
      (1) PA DOT Design Standards
      (2) PA DOT Design Manual Part 4 (Structures)
      (3) AASHTO Standard Specifications for Highway Bridges (1992 edition, and approved interim specifications)
      (4) AASHTO Guide Specifications for Structural Design of Sound Barriers (current edition)
      (5) The Aluminum Association: Aluminum Design Manual-Specifications and Guidelines for Aluminum Structures, (January 2005)
   f. In the event that a clear order of predominance cannot be established or a difference in the interpretation of the design cannot be resolved, the Chief Bridge Engineer is the arbiter, and the decision is to be final.
   g. Determine final plan location and elevation for structure mounted sound barrier wall. Furnish these plans and elevations to the contractor to develop the submittal drawings, including a complete elevation view of each wall section including top and bottom elevations, as well as the roadway grade. Provide firehose openings or other highway access as indicated, specified or directed.
   h. Use Working Stress Design Method with no overstress allowed.

SECTION 2

CONSTRUCTION SPECIFICATIONS FOR ACOUSTAX WITH NEPCOAT PAINT SYSTEM, ALUMINUM PANEL, STRUCTURE MOUNTED

I. DESCRIPTION – This work is the furnishing and constructing of structure mounted AcoustaX Sound Barrier Panels.

II. MATERIALS – Materials and workmanship are to be in accordance with PA DOT Publication 408 and the contract special provisions.
   a. Wall Posts (by others) – Section 1086.2(a).
   b. Wall Panels – The metal shell shall be constructed of a perforated face panel and a solid back panel. The face panel shall have a perforation pattern of 4.0 (5/32") diameter round holes on 7.9 (5/16") staggered centers. The perforated area shall be arranged in a pattern as indicated on the approved fabrication drawings. Face and back panels shall be fastened together with the use of pop rivets matching an Emhart AD6270UG with spacing and type as indicated on approved calculations and approved shop drawings. Drainage holes shall be provided at the bottom edge of the panel consisting of 4.8 (3/16") diameter holes spaced to match the rivet spacing. Shell material shall be 5052-H32 Aluminum, ASTM B209, 1.5 (0.060") thickness as specified and as indicated on the contract drawings. Rivets shall conform to IFI-114, 2003 Standard.
      Mechanical Properties:
      (1) Fcy = 145 MPa (21,000 psi)
      (2) Fc = 13 MPa (1,880 psi)
      (3) Fs = 6.1 MPa (890 psi)
      (4) E = 70,300 MPa (10,200,000 psi)
      E = 69,600 MPa (10,100,000 psi) (Deflection)
   c. Fill material: High density semi-rigid non-hygroscopic mineral wool RHT insulation 07210 nominal density 96 Kg/m3 (6 lb/cf), ASTM C612.
   d. Finish: Amerlock 400AL High Solid Epoxy Prime Coating and Amercoat 450HS Gloss Aliphatic Polyurethane Topcoat. The color of the panel shall be selected from a list of approved colors from the Federal Standard 595B Color Specification on each project order.
   e. End caps: Same metal as shell. Coating not required.
   f. Caulking: Section 705.8(b) meeting the requirements of ASTM C834 or C920.
   g. Unreinforced (Plain) Neoprene Bearing Pads (by others) – Section 1086.2(g)
   h. Cable Restrainer System: Clip angle shall be L 51x51x4.8 (L 2"x2"x3/16") 6061-T6 Aluminum, ASTM B308. Clip angles are fastened to the AcoustaX panels with pop rivets matching an Emhart AD6270UG. Rivets shall conform to IFI-114, 2003 Standard. The multiwire stainless steel cable shall have a minimum breaking strength of 35.6 kN (8 kip) with a diameter of 8 mm (5/16"), MIL-DTL-83420E.

III. PAINTING SPECIFICATION FOR ALUMINUM PANELS
   a. Description – This work is the coating of all surfaces of aluminum product components, as indicated.
   b. Material – Provide Amerlock 400AL High Solid Epoxy Prime Coating and Amercoat 450HS Gloss Aliphatic Polyurethane Topcoat.
      i) Powder Properties.

ASTM D2697 modified	Volume Solids	88% ± 3% (Primer) 66% ± 3% (Topcoat)
	Theoretical Coverage	34.7 m2/L/mil (1412 ft2/gal/mil) (Primer) 26 m2/L/mil (1059 ft2/gal/mil) (Topcoat)
ii) Coating Properties.	Finish	Semigloss (Primer) Gloss (Topcoat)
	Dry Film Thickness (per coat)	4-8 mils (Primer) 2-3 mils (Topcoat)

   c. Construction –
      i) General. Coating process to follow guidelines given in ASTM D1730, Standard Practices for the Preparation of Aluminum and Aluminum Alloy Surfaces for Painting. Apply coating in an environmentally controlled plant that is fully enclosed.
      ii) Surface Preparation. Substrate will be thoroughly sanded with 80 grit sand paper or blasted with fine abrasive. Equivalent to SSPC-3 or SSPC-5. Substrate will then be cleaned with PPG's DX1005 solution. Equivalent to SSPC-1 standards. Substrate will be primed using Amerlock 400AL with a wet mil thickness range between 8.5 to 11.5 wet mils. Primer will dry for a minimum of 24 hours.
      iii) Application of Coating. Apply the coating material in accordance with the manufacturer's recommendation as to application procedure and curing schedule. Primed substrate will be top coated with Amercoat 450HS with a wet mil thickness range between 4.5 and 7.5 mils. Provide a cured coating of uniform color, gloss, and thickness, and free of blisters, pinholes, fish eyes, sags, runs, and other irregularities. All prime and topcoats will be applied with HVLP spray guns in a pressurized spray booth. The minimum ambient temperature will be no less than 21 degreees Celsius (70 degrees Fahrenheit). Coatings will be applied to outside surface of both the solid and perforated sheets.
      iv) Inspection. The coater is responsible for all quality control checks including visual inspection, thickness measurements, holiday testing, and for keeping records on the results of all such inspections in a form approved by the Engineer and in compliance with the Quality Control Plan. The Inspector will have access to each part of the process, and will have the right and opportunity to witness any quality control tests, and/or perform such tests himself on a random sampling basis.

SECTION 2 (Continued)

      v) Touch Up System. Provide a compatible touch up system designed and color matched for patching the coating used on the product components. Satisfactorily patch all defects in the polyester coating, areas damaged during erection, and all visible uncoated areas. Do not cover more than 5% of the total surface area with patching material.
         (1) Surface Preparation. Apply the coating directly to the metal for maximum performance. Ensure that metal is clean, dry, and free of rust and scale. Remove grease, oil, etc. with rubbing alcohol or mineral spirits solvents. Coat cleaned surface before oxidation occurs.
         (2) Application. Apply material with ordinary brush, roller or spray in accordance with the manufacturer's instructions, and at the discretion of the Engineer. Achieve a tack free surface in 2 to 3 hours at 22° C (72° F). Achieve full cure in 3 to 5 days at 22° C (72° F). Exercise care in handling pieces before they are fully cured.
      vi) Graffiti Removal. Follow manufacturer's instructions for use of all chemicals in this procedure. Remove any surface oils or contaminants via hand solvent wash using Dupont 3949S Low VOC cleaner or detergent pressure wash/rinse procedure. Use an abrasive pad to abrade the surface. Solvent clean coated surfaces using Acetone. Using 220 grit sandpaper, sand coated surface and feather the edges of the area to be painted. Use Dupont MetaLok CVP 250 STM Pretreatment where bare metal is exposed. Let dry for 30 minutes. Apply color matched topcoat system when surface temperature is above 8° C (45° F) and less than 44° C (110° F).

PENNSYLVANIA
DEPARTMENT OF TRANSPORTATION
RECOMMENDED
Thomas P. Macioce
CHIEF BRIDGE ENGINEER

Mark	Description	By	Chk'd.	Recm'd.	Date
REVISIONS					

PENNDOT DRAWING #2002-130PE SEP 25 2008

COMMONWEALTH OF PENNSYLVANIA
DEPARTMENT OF TRANSPORTATION

DIAMOND MANUFACTURING CO.

ACOUSTAX WITH NEPCOAT PAINT SYSTEM, ALUMINUM PANEL, STRUCTURE MOUNTED

RECOMMENDED _____

SHEET 1 OF 5

"I CERTIFY THAT ALL ASSUMPTIONS MADE IN DESIGNING THESE SOUND BARRIER WALL PANELS HAVE BEEN VALIDATED EITHER THROUGH CONSTRUCTION DETAILS OR SPECIAL NOTES AND INSTRUCTIONS TO THE FABRICATOR, ERECTOR AND CONTRACTOR."

COMMONWEALTH OF PENNSYLVANIA
REGISTERED PROFESSIONAL
MARK T. MALINOVITCH
ENGINEER
NO. PE059790

DESIGNED: D.M.D. | DRAWN: D.M.D. | CHECKED: M.T.M.

GPG/CYW

SECTION 2 (Continued)

IV. CONSTRUCTION – As indicated on the design contract drawings and approved shop drawings and as follows:

a. Shop Drawings – Before beginning construction submit for approval shop drawings showing fabrication details, and handling, transportation, construction procedures for all wall elements including connections.

b. Installation Requirements – Section 1086.3(c) and as follows:

i) Fabrication – Prior to fabrication, submit shop drawings for review and approval. Fabricate posts in accordance with PA DOT Pub. 408, Section 1105.02(s) and 1060.2(b). Fabricate the panels in accordance with approved drawings and approved Quality Control Plan. Fabricate all panel components and apply the finish to all surfaces. Insert RHT 60 [76 x 305 x 1220 (3" x 12" x 48") or 102 x 305 x 1220 (4" x 12" x 48")] batts of acoustical fill material. Install end caps with legs facing inward using two Emhart AD6270UG pop rivets in each side of the panel. Fabricate sample wall by the same process that will be used for all production. Panels not conforming to the approved test sample will be rejected. Approved sample panels may be incorporated into the project.

ii) Erection – Install sound barrier wall as indicated, as shown on approved shop drawings, and in accordance with the manufacturer's recommendations. Secure panels to provide a vibration free installation.

c. Color – The color of the panel shall be selected from a list of approved colors from the Federal Standard 595B Color Specification on each project order. Seperate colors may be specified for face panel and back panel. The lowest available gloss in the specified color shall be selected. Approved colors include: Red 22144, Brown 20117, 20475, Beige 26424, Cream 23697, White 27880, Yellow 23540, Green 24097, 24533, Blue 25189, 25190, and Gray 26559, 26622.

V. FABRICATION TOLERANCES – Pub. 408, Section 1086.3(d) except as follows:

Panels	(mm)	(inches)
Height:	±3	±1/8
Length:	±3	±1/8
Thickness:	±3	±1/8
Out of Flatness:		
–Lengths to 2440 mm (8 ft.):	3	1/8
–Lengths over 2440 mm (8 ft.):	6	1/4

VI. ERECTION TOLERANCES – Pub. 408, Section 1086.3(d)2.

VII. WORKMANSHIP

a. The Sound Barrier panel shall exhibit good workmanship and be free of burrs, cracks, or other objectionable defects, which would adversely affect the barrier's performance or serviceability. Panels assembled together with caulked joint shall not permit light leaks through horizontal joints.

b. All damaged panels will be rejected by the engineer either at the fabrication shop or the construction site even after installation, but prior to acceptance of the project.

VIII. ACQUSTICAL PROPERTIES

a. NRC Rating – Sound Absorption: The AcoustaX Sound Barrier shall have an NRC (Noise Reduction Coefficient) rating of 1.05 as measured per ASTM C423 with a type A mounting per ASTM E795.

b. STC Rating – Transmission Loss: The Aluminum AcoustaX Sound Barrier construction shall have an STC (Sound Transmission Class) rating of 30 as measured per ASTM E90 with STC calculations per ASTM E413.

IX. REJECTION – Reject individual AcoustaX panels for any of the following and as determined by the Engineer:

a. Fracture or cracks through the panel.
b. Missing or loose rivets.
c. Damage to panel surfaces that would prevent tight fitting joints.
d. Damage to panel ends that would prevent safe connection to support posts.
e. Variation in color of panels.
f. Any dent in the panel.
g. Dimensions not conforming to the allowable tolerances specified.

Mark the rejected panel "Rejected for the Department's Use" with waterproof paint. Repair procedures and repair require approval by the Engineer.

X. TECHNICAL ASSISTANCE

Have a trained representative available to the project site during erection procedures to assist the contractor and Engineer full time for the first three days and then as needed for the duration of construction. Provide a technical representative to assist in the event that unusual problems or special circumstances arise.

XI. MEASUREMENT & PAYMENT

In accordance with Pub. 408, Section 1086.4.

Mark	Description	By	Chk'd.	Recm'd.	Date
REVISIONS					

PENNDOT DRAWING #2002-130PE SEP 25 2003

COMMONWEALTH OF PENNSYLVANIA
DEPARTMENT OF TRANSPORTATION

DIAMOND MANUFACTURING CO.

ACOUSTAX WITH NEPCOAT PAINT SYSTEM, ALUMINUM PANEL, STRUCTURE MOUNTED

COMMONWEALTH OF PENNSYLVANIA REGISTERED PROFESSIONAL MARK T. MALINOVITCH ENGINEER

RECOMMENDED _____

SHEET 2 OF 5

DESIGNED: D.M.D. | DRAWN: D.M.D. | CHECKED: M.T.M.

GENERAL NOTES

1. PANEL SURFACES: ALUMINUM GRADE 5052-H32: PERFORATED SIDE – 1.5 (0.060") THICK WITH 4.0 (5/32") DIAMETER HOLES ON 7.9 (5/16") STAGGERED CENTERS; SOLID SIDE – 1.5 (0.060") THICK; END CAP – 1.5 (0.060") THICK.
2. PANEL FILL: HIGH DENSITY SEMI-RIGID NON-HYGROSCOPIC MINERAL WOOL RHT INSULATION 07210 NOMINAL 96 KG/CM (6 LB/CF) DENSITY.
3. MATERIAL/FINISH: AMERLOCK 400AL HIGH SOLID EPOXY PRIME COATING AND AMERCOAT 450HS GLOSS ALIPHATIC POLYURETHANE TOPCOAT.
4. SOUND TRANSMISSION LOSS PER ASTM E90. SOUND ABSORPTION PER ASTM C423.

   SOUND TRANSMISSION COEFFICIENTS STC 30 ALUMINUM

HZ	125	250	500	1000	2000	4000	
AF 1	16	16	27	39	40	35	FULL OCTAVE

   SOUND ABSORBTION COEFFICIENTS:

HZ	125	250	500	1000	2000	4000	
AF 1	0.45	1.03	1.13	1.02	1.00	0.84	NRC 1.05

5. PANELS SHALL BE LOWERED CONSECUTIVELY BETWEEN VERTICAL WIDE FLANGE STEEL POSTS.
6. PANELS DESIGNED TO WITHSTAND WIND LOADS PER PA DOT DESIGN MANUAL 4.
7. POSTS AND ALL THEIR ASSOCIATED HARDWARE BY OTHERS.
8. PROVIDE MATERIALS AND WORKMANSHIP IN ACCORDANCE WITH PENNSYLVANIA DEPARTMENT OF TRANSPORTATION PUBLICATION 408/2007, AASHTO/AWS D1.5M/D1.5 2002 BRIDGE WELDING CODE, THE CONTRACT SPECIAL PROVISIONS, AND ACOUSTAX STANDARD SPECIFICATIONS.
9. DESIGN SPECIFICATIONS: 1989 AASHTO "GUIDE SPECIFICATIONS FOR THE STRUCTURAL DESIGN OF SOUND BARRIERS", PENNSYLVANIA DEPARTMENT OF TRANSPORTATION DESIGN MANUAL, PART 4, STRUCTURES, AND THE ALUMINUM ASSOCIATION: ALUMINUM DESIGN MANUAL-SPECIFICATIONS AND GUIDELINES FOR ALUMINUM STRUCTURES (JANUARY 2005).
10. LIMIT DEFLECTION OF SOUND BARRIER WALL PANELS & SUPPORT POSTS TO THE PERTINENT SPAN LENGTH DIVIDED BY 360.
11. VERIFY ALL DIMENSIONS AND GEOMETRY OF THE EXISTING STRUCTURE IN FIELD AS NECESSARY FOR PROPER FIT OF THE PROPOSED BARRIER AND SOUND BARRIER CONSTRUCTION.

    PANEL REQUIREMENTS:
    A. FABRICATE, TRANSPORT AND ERECT THE PREFABRICATED UNITS IN SUCH A MANNER AS TO PREVENT DAMAGE.
    B. PROVIDE ALL ACCESSORIES, MATERIALS AND METHODS WHICH ARE NOT SPECIFICALLY INDICATED BUT WHICH ARE ESSENTIAL FOR INSTALLATION OR CONSTRUCTION OF THE PANELS.
13. SEE BC-778M, BC-779M AND BD-679M FOR ADDITIONAL DETAILS NOT SHOWN.
14. DIMENSIONS SHOWN IN ( ) ARE U.S. CUSTOMARY UNITS.
15. WEIGHT OF PANEL FOR DESIGN (INCLUDING ABSORPTIVE MATERIAL) IS: 21.9 KG/SM (4.5 LBS/SF) – ALUMINUM

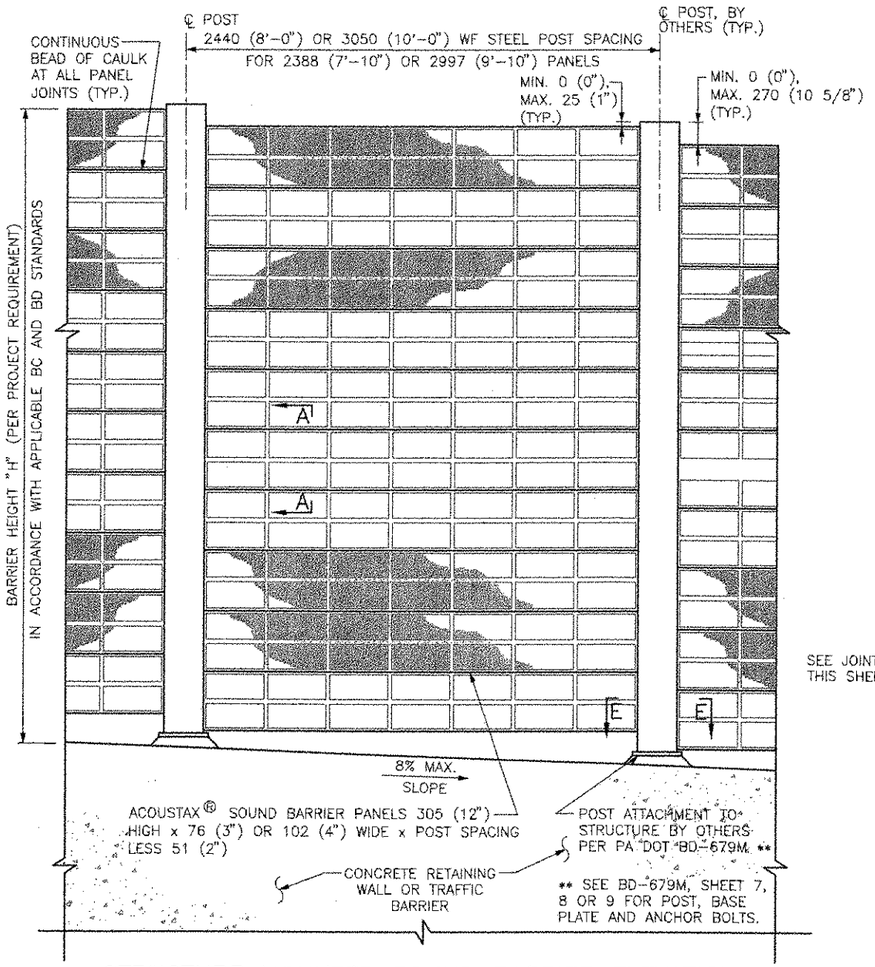

STRUCTURE MOUNTED SOUND BARRIER ELEVATION

NOT TO SCALE

NOTE: FOR SECTION E-E, SEE SHEET 4

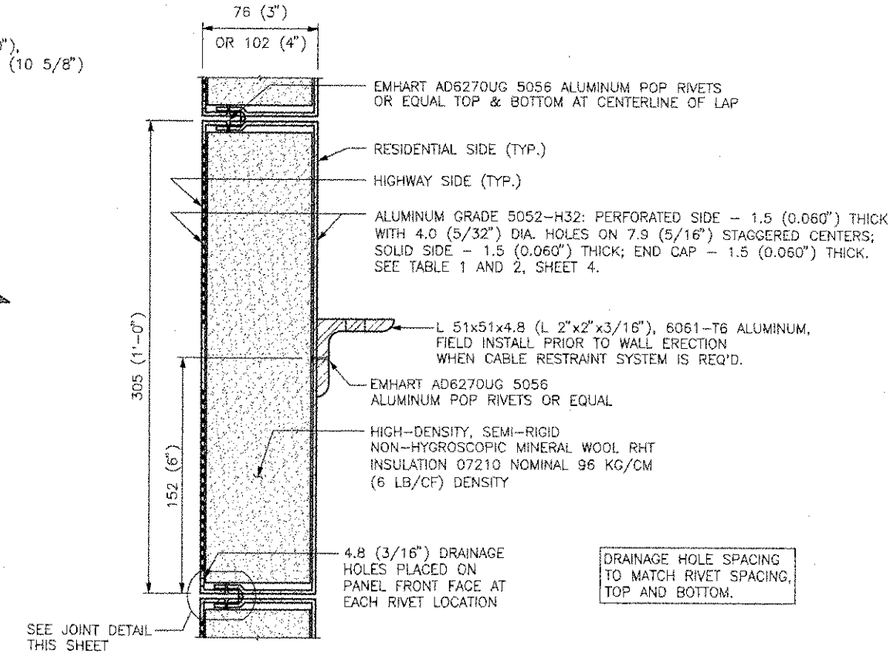

SECTION A-A

NOT TO SCALE

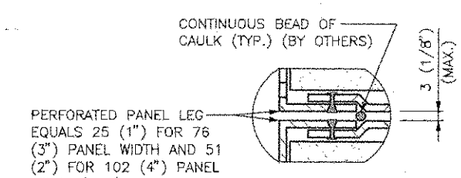

JOINT DETAIL

NOT TO SCALE

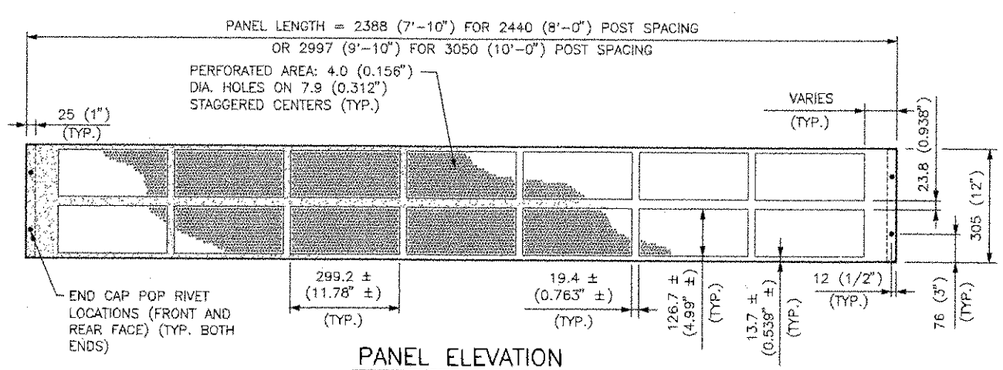

PANEL ELEVATION

NOT TO SCALE

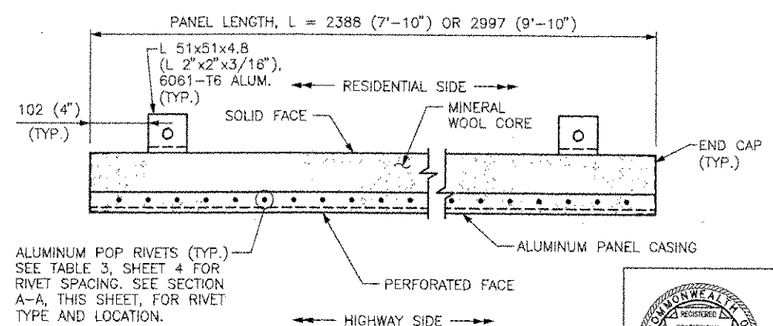

PANEL PLAN

NOT TO SCALE

Mark	Description	By	Chk'd.	Recm'd.	Date

REVISIONS

PENNDOT DRAWING #2002-130PE SEP 25 2008

COMMONWEALTH OF PENNSYLVANIA
DEPARTMENT OF TRANSPORTATION

DIAMOND MANUFACTURING CO.

ACOUSTAX WITH NEPCOAT PAINT SYSTEM, ALUMINUM PANEL, STRUCTURE MOUNTED

COMMONWEALTH OF PENNSYLVANIA REGISTERED PROFESSIONAL MARK T. NALINOVITCH ENGINEER NO. PE059882

RECOMMENDED _____

SHEET 3 OF 5

DESIGNED: D.M.D. | DRAWN: D.M.D. | CHECKED: M.T.M.

TABLE 1 – U.S. CUSTOMARY UNITS					
MATERIAL TYPE	MOUNTING TYPE	PANEL DEPTH (IN)	POST SPACING (FT)	PERFORATED PANEL GAGE (IN)	SOLID PANEL GAGE (IN)
ALUMINUM	STRUCTURE	3	8	0.060	0.060
		4	10	0.060	0.060

TABLE 2 – METRIC UNITS					
MATERIAL TYPE	MOUNTING TYPE	PANEL DEPTH (MM)	POST SPACING (MM)	PERFORATED PANEL GAGE (MM)	SOLID PANEL GAGE (MM)
ALUMINUM	STRUCTURE	76	2440	1.5	1.5
		102	3050	1.5	1.5

TABLE 3 – RIVET SPACINGS			
MATERIAL TYPE	MOUNTING TYPE	POST SPACING	RIVET SPACING
ALUMINUM	STRUCTURE	2440 (8'–0")	102 (4")
		3050 (10'–0")	102 (4")

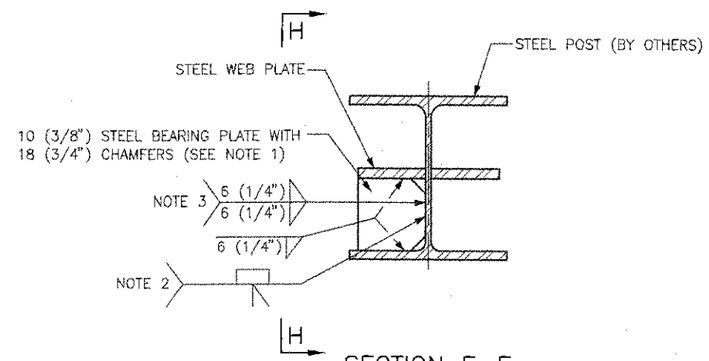

SECTION E–E

NOT TO SCALE

NOTE: FOR LOCATION OF SECTION E–E, SEE SHEET 3

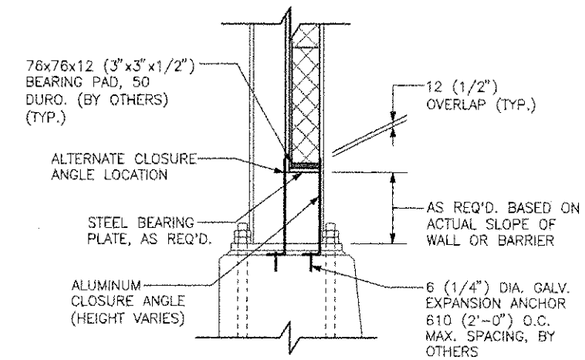

SECTION H–H

NOT TO SCALE

NOTES:

1. STEEL BEARING PLATE REQUIRED ONLY WHEN DISTANCE FROM BOTTOM OF PANEL TO TOP OF BASE PLATE IS > 38 (1 1/2"), OTHERWISE DETAIL BEARING PADS TO MAINTAIN HORIZONTAL PANELS.
2. USE FULL PENETRATION GROOVE WELD FOR SLOPES WHERE WELDING CLEARANCES CAN NOT BE ACHIEVED TO PROVIDE A DOUBLE SIDED FILLET WELD.
3. USE DOUBLE SIDED FILLET WELD WHEN CLEARANCES ALLOW.

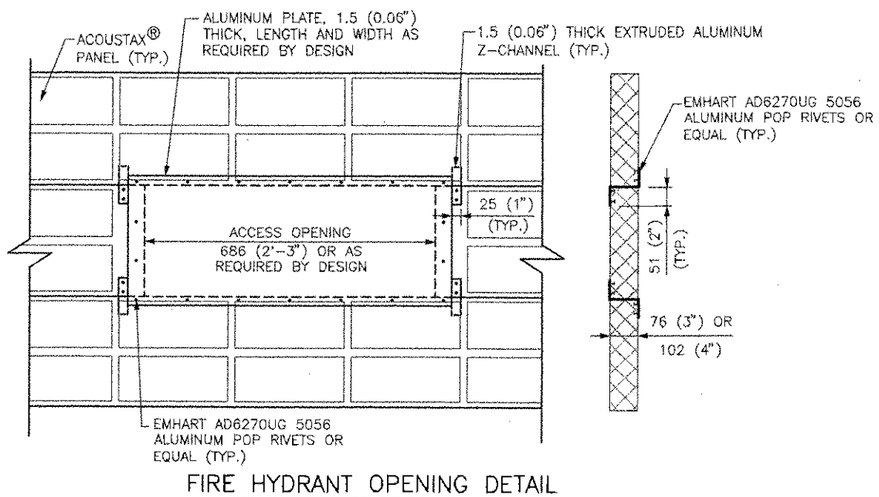

FIRE HYDRANT OPENING DETAIL

NOT TO SCALE

Mark	Description	By	Chk'd.	Recm'd.	Date
REVISIONS					

PENNDOT DRAWING #2002–130PE SEP 25 2008

COMMONWEALTH OF PENNSYLVANIA
DEPARTMENT OF TRANSPORTATION

DIAMOND MANUFACTURING CO.

ACOUSTAX WITH NEPCOAT PAINT SYSTEM,
ALUMINUM PANEL, STRUCTURE MOUNTED

COMMONWEALTH OF PENNSYLVANIA
REGISTERED PROFESSIONAL
MARK T. MALINOVITCH
ENGINEER

RECOMMENDED _____

SHEET 4 OF 5

DESIGNED: D.M.D. | DRAWN: D.M.D. | CHECKED: M.T.M.

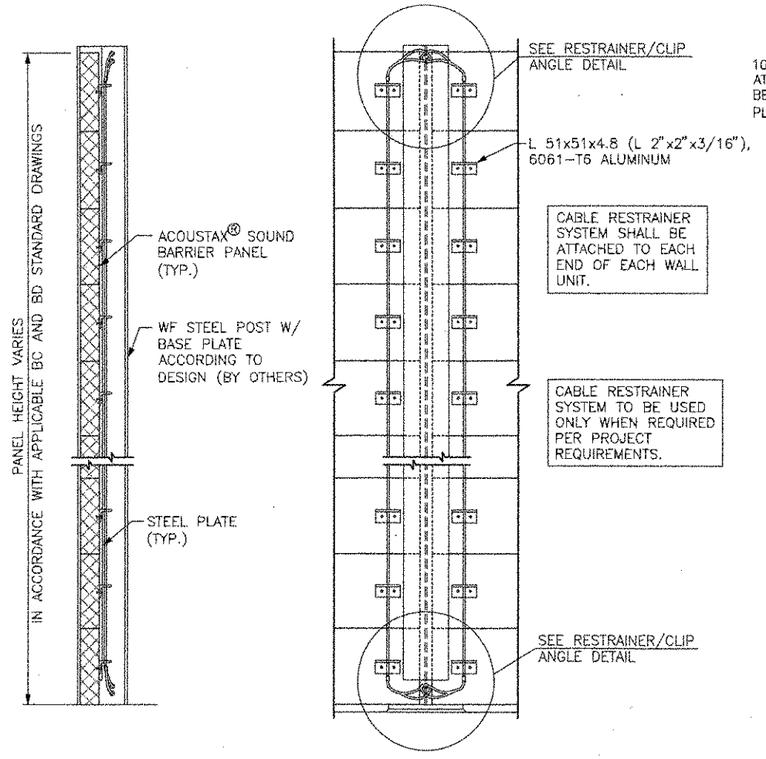

CABLE RESTRAINER SYSTEM

NOT TO SCALE

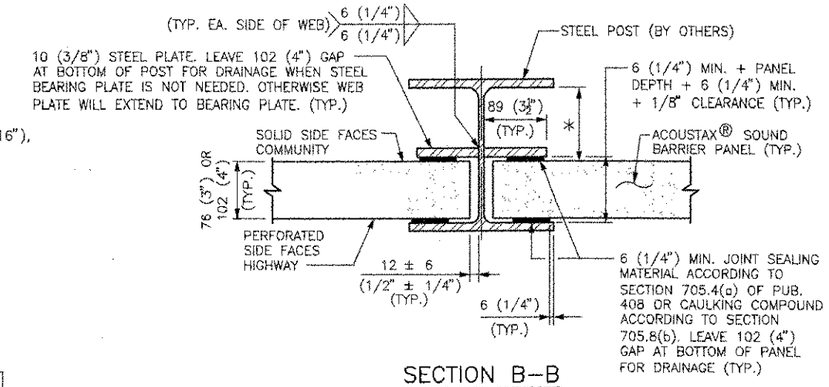

SECTION B–B

NOT TO SCALE

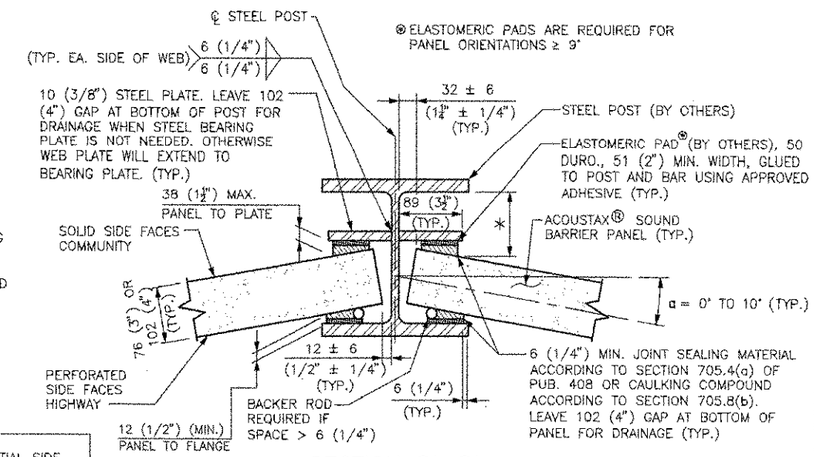

SECTION B'–B'

NOT TO SCALE

* IF DISTANCE FROM RESIDENTIAL SIDE OF PANEL TO FLANGE OF POST IS ≤76 (3"), PROVIDE ELASTOMERIC PAD IN ACCORDANCE WITH STANDARD DRAWING BC-778M, SHEET 3, SECTION D-D (STEEL H-BEAM) IN PLACE OF STEEL PLATE.

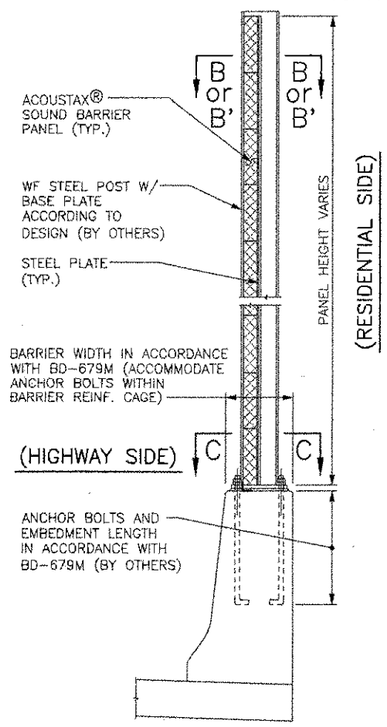

STRUCTURE MOUNTED BARRIER CONDITION

NOT TO SCALE

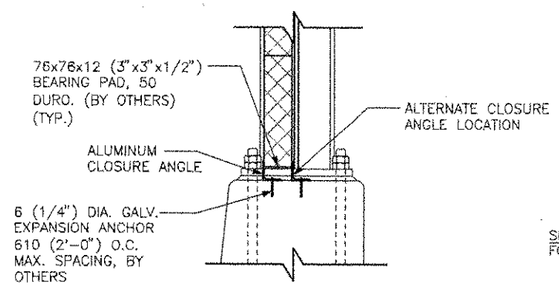

SECTION F–F

NOT TO SCALE

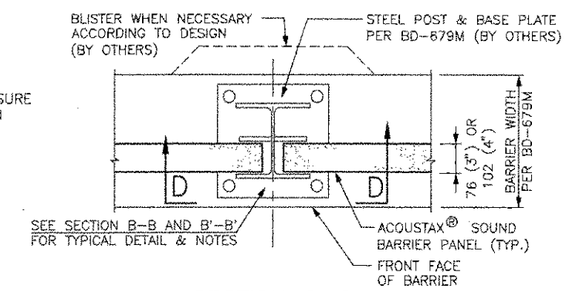

SECTION C–C

NOT TO SCALE

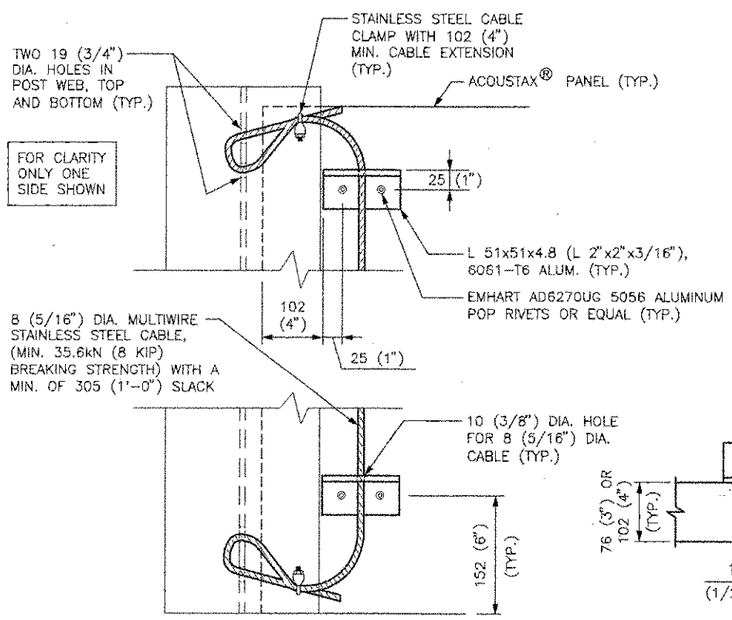

ELEVATION

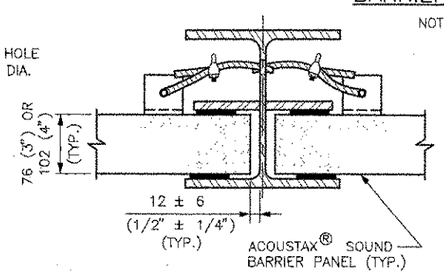

PLAN

RESTRAINER/CLIP ANGLE DETAIL

NOT TO SCALE

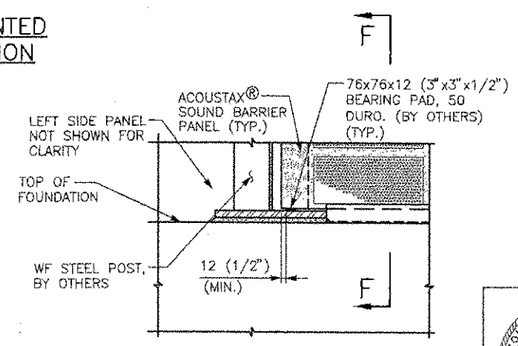

SECTION D–D

NOT TO SCALE

Mark	Description	By	Chk'd.	Recm'd.	Date
	REVISIONS				

PENNDOT DRAWING #2002-130PE SEP 25 2008

COMMONWEALTH OF PENNSYLVANIA
DEPARTMENT OF TRANSPORTATION

DIAMOND MANUFACTURING CO.

ACOUSTAX WITH NEPCOAT PAINT SYSTEM, ALUMINUM PANEL, STRUCTURE MOUNTED

COMMONWEALTH OF PENNSYLVANIA REGISTERED PROFESSIONAL MARK T. MALINOVITCH ENGINEER NO. PE066906

RECOMMENDED _____

SHEET 5 OF 5

DESIGNED: D.M.D. | DRAWN: D.M.D. | CHECKED: M.T.M.

Product:

Faddis Concrete Products
AcoustaCrete Precast Absorptive Sound Barrier Panel Wall System
PennDOT Drawing #2000-335PE
Item 9000-7025

Approval Date:	**Initiated By SOL:**
October 15, 2008	431-08-16

Application/Use:

AcoustaCrete Precast Absorptive Sound Barrier Panel Wall System manufactured by Faddis Concrete Products, 3515 Kings Highway, Downingtown, PA 19335 (Telephone No. 610-269-4685), have been approved for use as an "**alternate"** or "**as-designed"** sound barrier. This system can be used for ground mounted or structure mounted.

Specifications:

Attached is a copy of the Design/Material/Construction Specifications specified on the Standard Detail Drawings PennDOT Drawing #2000-335PE, dated October 15, 2008 for post and panel sound barriers for your use.

Standard Drawing:

Attached is a copy of the Standard Detail Drawing #2000-335PE, dated October 15, 2008, of AcoustaCrete Precast Absorptive Sound Barrier Panel Wall System details for your use.

Comment:

On those projects permitting the use of this system as an alternate, a special provision should be included in the proposal to indicate that the "Precast Absorptive Sound Barrier Panel Wall System" as an alternate is allowed.

The contractor will be required to revise the pertinent contract drawings as per DM-4M, PP 1.10 to show the usage of "Precast Absorptive Sound Barrier Panel Wall System" and will also be required to reimburse the Department a fee of $1000 per design for the review and approval of the revision. This should be specified in the contract's Special Provision.

FHWA approval has been secured for Precast Absorptive Sound Barrier Panel Wall system.

GENERAL NOTES

1) All dimensions are in millimeters unless otherwise noted. U.S. customary units in [ ] parentheses.

2) All "design" metric units indicated are soft converted from U.S. customary units.

3) Design Specifications:
PennDOT Design Manual Part 4, Structures.
- 1989 AASHTO "Guide Specifications for Structural Design of Sound Barriers", including the 1992 and 2002 interims.
- 1992 AASHTO "Standard Specifications for Highway Bridges", 15th Edition, including the 1993 and 1994 interims.
- 2001 AASHTO "Standard Specifications for Structural Supports for Highway Signs, Luminaries, and Traffic Signals", 4th Edition, including the 2002 and 2003 interims.
- Design is in accordance with the working stress design method. (No increase in allowable unit stresses are permitted except for group III loadings which permits a 33% overstress.)

4) Construction Specifications and Workmanship:
- Provide materials and perform work in accordance with the current version of the Pennsylvania Department of Transportation Publication 408. AASHTO/AWS/D1.5M/D1.5 2002 – Bridge Welding Code and the contract special provisions. (Use AWS/D1.1/D1.1M 2002 for welding not covered in AASHTO/AWS/D1.5M/D1.5 2002.)

5) Design Loads:
- Wind Load:
  - The wind load includes a gust factor of 1.3 and a drag factor of 1.2 and is based on a maximum 50-year mean wind velocity at 9144mm [30'-0"] above the ground surface of 130 km/hr [80 mph].
    - Ground Mounted Sound Barrier Walls:
      Metric Units
      Height Zone: 0mm to 4267mm = 0.96 kPa
      Height Zone: Over 4267mm = 1.34 kPa
      U.S. Customary Units:
      Height Zone: 0' to 14'-0" = 20 PSF
      Height Zone: over 14'-0" = 28 PSF
    - Structure Mounted Sound Barrier Walls:
      Metric Units
      Height Zone: 0mm to 4115mm = 1.77 kPa
      U.S. Customary Units:
      Height Zone: 0' to 13'-6" = 37 PSF
- Ice Load: 0.14 kPa [3 PSF] applied to one side of panel and post.
- Seismic Load: Seismic acceleration coefficient "A" equal to 0.15.

6) Wall heights must equal or exceed the acoustical profile.

7) Provide either precast concrete posts or steel posts. Do not mix post types without permission of the District Bridge Engineer.

8) All reinforcement steel bars and welded wire fabric shown are soft converted metric sizes.

9) Provide uncoated reinforcement bars in the footings and caissons.

10) Provide epoxy coated or galvanized reinforcement bars in the posts and panels where the wall is within 4300 [14'-0"] of the edge of travel lane. Epoxy coated or galvanized reinforcement may be required if future widening is anticipated.

11) Do not splice vertical post reinforcement.

12) All dimensions shown are horizontal, except as noted.

13) Dimensions shown are for a normal temperature of 20 degrees celsius C [68 degrees F].

14) Refer to the appropriate BC/BD sheets for additional details not shown.

15) Panels must only be lifted from the vertical position in the field.

16) Weight of absorptive material is calculated at 960 kg/M³ [60 lb/ft³].

17) Minimum thickness of Acoustacrete is 102mm [4"] plus the architectural reveal thickness.

18) Provide shop drawings in accordance with Section 105.02(d) of Publication 408.

19) Provide certifications as per Section 106.03(b)3.

20) All structurally cracked panels, as determined by the Engineer, will be rejected either at the fabrication shop or the construction site, even after installation, but prior to acceptance of the project.

21) Measurement and payment in accordance with Section 1086 of Publication 408.

SECTION 1

DESIGN SPECIFICATION FOR FADDIS CONCRETE PRODUCTS PRECAST
GROUND OR STRUCTURE MOUNTED ABSORPTIVE SOUND BARRIERS (PANELS)

1) IF REQUIRED:
   a) Faddis Concrete Products will provide shop drawings per BC and BD standards for precast sound barrier posts (including hardware) and precast sound barrier panels as modified for absorptive surfaces per these details. Foundations by others are to be in accordance with the Publication 408. Design procedures or permissible variations other than those contained herein are not permitted unless pre-approved by the Chief Bridge Engineer.
2) DESIGN:
   a) Secure District Bridge and Enviromental Engineer's approval before incorporating Faddis Concrete Products' precast absorptive sound barriers in any project.
   b) Provide at no expense to the Department, four (4) sets (three to the District and one set to Central Office, Bridge Division) of shop drawings 558mm x 914mm [22" x 36"], and detailed erection plans for approval. Provide approved drawings using Department drafting standards.
3) In the event that certain design parameters, stresses, or specifications are in conflict, the following order of predominance governs:
   a) Design requirements listed in "Special Drawings and Special Design Requirements" (Part B) of the Special Provisions.
   b) PA DOT Design Standards
   c) PA DOT Design Manual Part 4 (Structures)
   d) AASHTO Standard Specifications for Highway Bridges (1992 edition, including approved interims)
   e) AASHTO Guide Specifications for Structural Design of Sound Barriers (1989 edition) (except increase in stresses due to wind load is not permitted).
4) In the event that a clear order of predominance cannot be established or a difference in the interpretation of the design cannot be resolved, the Chief Bridge Engineer is the arbiter, and the decision is to be final.
5) Determine final plan location, grades and elevation for sound barrier wall. Furnish these plans and elevations to the wall supplier to develop the submittal drawings, including top and bottom elevations, as well as the roadway grade. Project final elevations, established in the field, for the duration of the project and do not adjust without prior approval. Provide fire hose openings or other highway access as indicated, specified, or directed. Provide adequate reinforcement or frames around openings to preclude cracking. Show reinforcement or frame details on the submittal drawings.
6) Foundations to be in accordance with latest PA DOT approved standards for Post and Foundations.
7) Provide acoustical standards as follows:
   a) Noise Reduction Coefficient (NRC) shall be 0.70 or greater as tested per ASTM C423-90a.
8) Panels are designed for the additional weight of 102mm [4"] absorptive material plus architectural reveal thickness of 25mm [1"] total.
9) Designed by working stress, with no overstress allowed.
10) Anti-graffiti coatings are not recommended on the absorptive material. Graffiti can be masked in the field with additional coats of decorative stain used during fabrication of the wall panels.
11) Architectural finish of absorptive material to be indicated in the contract proposal.
12) Color of integral pigment to be indicated in contract proposal as required by contract specifications.

Faddis Concrete Products
AcoustaCrete® Repair Procedure

1) Chip away all loose or damaged material. It is not necessary to remove AcoustaCrete down to structural concrete.
2) Clean exposed surface of sound material with a wire brush.
3) Saturate material with water in the area to be patched.
4) Mix a Bulletin 15 approved patching material and bonding agent to a creamy consistency and apply the patch material, filling all voids – follow immediately with (5)
5) Pre-mix wood chips with cement until a compressed ball can be formed in hand
   a. Pre-treat wood chips with proprietary chemical treatment
   b. 3 parts wood chips to 1 part cement
   c. 1/16 part water, approximately
6) Apply AcoustaCrete patching mix – pack and compress to the shape of the finished product.
7) Cover patch with 2 mil plastic (or spray-on membrane) to retain moisture for 72 hours.

SECTION 2

CONSTRUCTION SPECIFICATIONS FOR FADDIS CONCRETE PRODUCTS
PRECAST ABSORPTIVE SOUND BARRIER (PANELS)

1) DESCRIPTION– This work is the construction of ground or structure supported sound barrier panels as precast by Faddis Concrete Products.
2) FINISH– the finish of the roadway side of the panel provided by Faddis Concrete Products is recommended to be Ashlar Stone, Brick pattern, or Flat Fractured Rib #205 by Architectural Polymers or equal. Other finishes may be proposed that will provide a durable architectural feature. The finish for the residential side of the panel shall be fuzzy raked finish or impressed pattern or as indicated on contract drawings in standard gray concrete. Color of absorptive concrete to be achieved using pigmented concrete and matching surface applied acrylic stain. Color of panels to be as indicated or specified and uniform from panel to panel.
3) Foundation– Section 1086.2(f) (By others)
4) Construction: As indicated on the design contract drawings and approved shop drawings and as follows:
   a) Shop drawings. Before beginning construction, submit for approval shop drawings showing fabrication details and handling, transportation, and construction procedures for wall elements including connections.
   b) Installation requirements– Section 1086.3(c) and as follows:
      i) Fabrication– Prior to fabrication submit shop drawings for review and approval. Fabricate the precast panels in an approved plant in accordance with approved drawings, approved quality control plan, and Section 714.
      ii) Fabricate sample wall by the same process that will be used for all production. Panels not conforming to the approved test sample will be rejected. Approved sample panels may be incorporated into the project.
5) Fabrication Tolerances– Section 1086.3(d) and as follows:

Height:	+/- 6mm [1/4"]	
Length:	+/- 6mm [1/4"]	per 2540mm [10'-0"] of panel length
Thickness:	+/- 6mm [1/4"]	
Out of Flatness:	+/- 3mm [1/8"]	for panel length up to 2400mm [8'-0"]
	+/- 6mm [1/4"]	for panel length above 2400mm [8'-0"]

6) Erection Tolerances– Section 1086.3(d)2.
7) Rejection– Reject Individual Precast Concrete Panel for any of the following and as determined by the Engineer.
   a) Fracture or cracks opening over 0.2mm [0.007"] on the wall panel.
   b) Defects that indicate proportioning, mixing, and molding not in compliance with the specification, as specified or indicated.
   c) Honeycombed open texture.
   d) Damaged ends where such damage would prevent making a satisfactory joint.
   e) Twenty-eight day compressive strength is less than the design concrete strength.
   f) Dimensions not conforming to the allowable tolerances specified.

   Mark the rejected precast panel "Rejected for the Department's Use" with waterproof paint. Repair and repair procedures require approval by the Engineer.
8) Technical Assistance–
   a) Provide a technical representative to assist in the event unusual problems or special circumstances arise, upon request of engineer or contractor.

Faddis Concrete Products
AcoustaCrete® Graffiti Response Procedure

1) Faddis will include integral pigment meeting the requirements of ASTM C979 in the AcoustaCrete and a color matched surface applied stain if required.
2) Faddis will apply 2 coats of Tamms Aquastain (or equal) color coat to panels in the plant at the coverage rate of 37 sq. M [400 square feet] per gallon per coat.
3) Apply color matched acrylic stain in multiple coats as necessary to mask graffiti and blend the masked surface with the surrounding panel color.

PENNSYLVANIA
DEPARTMENT OF TRANSPORTATION
RECOMMENDED
Thomas P. Macioce
CHIEF BRIDGE ENGINEER

OCT 15 2008

MARK	DESCRIPTION	BY	CHK'D.	RECM'D.	DATE

REVISIONS

PENNDOT DRAWING #2000-335 PE

I hereby certify that all assumptions made in designing these sound barrier wall panels have been validated either through construction details or special notes and information to the fabricator, Erector and Contractor.

COMMONWEALTH OF PENNSYLVANIA
REGISTERED PROFESSIONAL ENGINEER
PE-043189-E

10/9/08

PREPARED BY:
DELTA ENGINEERS
184 COURT ST.
BINGHAMTON, NY 13901

FADDIS CONCRETE PRODUCTS
3515 KING'S HIGHWAY, DOWNINGTOWN, PA 19335

AcoustaCrete®
PRECAST ABSORPTIVE
SOUND BARRIER PANEL
STANDARD DETAILS

GENERAL NOTES

SHEET 1 OF 28

MATERIAL NOTES

1. Precast Concrete Posts:
   - Provide class AA cement concrete, modified in the precast concrete posts. f'c = 35 MPa [5,000 PSI]
   - Density of concrete = 2400 kg/m³ (unit weight of concrete = 150 LB / CU. FT.)
   - Provide a minimum concrete strength of 27.6 MPa [4,000 PSI] before stripping the posts from the forms.
   - Provide smooth finish on all faces of the precast post, unless otherwise specified on the contract drawings.

2. Precast concrete sound barrier panels:
   - Provide class AA cement concrete, modified in the precast concrete panels. f'c = 35 MPa [5,000 PSI]
   - Density of concrete = 2400 kg/m³ (unit weight of concrete = 150 LB / CU. FT.)
   - Provide a minimum concrete strength of 27.6 MPa [4,000 PSI] before stripping the panels from the forms.

3. Reinforcement Steel:
   - Provide grade 420 [grade 60] deformed reinforcing bars that meet the requirements of ASTM A615M [A615], ASTM A996M [A996], or ASTM A706M [A706]. Do not weld reinforcing bars unless specified. Do not use rail steel A996M [A996] reinforcement bars where bending or welding or reinforcement bars is indicated. fs = 160 MPa [24,000 PSI]
   - All reinforcement steel bars shown are soft converted metric sizes.
   - Provide uncoated, epoxy coated, or galvanized reinforcement in the posts, as specified on the contract drawings.
   - Provide epoxy coated or galvanized threaded reinforcement bars in the precast concrete post with base plates.
   - Provide uncoated, epoxy coated, or galvanized reinforcement in the panels as specified on the contract drawings.
   - Provide minimum lap and embedment length for reinforcing bars of 30 diameters or in accordance with the current AASHTO specifications as modified by the Design Manual part 4, whichever is greater.
   - Do not splice vertical post reinforcement.
   - Mechanical connections, which meets the requirements of Publication 408, Section 1002, may be used upon acceptance from the engineer.

4. Welded Wire Fabric:
   - Provide grade 480 [grade 70] deformed welded wire fabric that meets the requirements of ASTM A497 in the precast concrete posts. fs = 160 MPa [24,000 PSI]
   - Provide grade 450 [grade 65] plain welded wire fabric that meet the requirements of ASTM A185 in the precast concrete panels. fs = 160 MPa [24,000 PSI]
   - All welded wire fabric shown is soft converted metric sizes.
   - Provide uncoated, epoxy coated, or galvanized welded wire fabric in the posts.
   - Provide uncoated, epoxy coated, or galvanized welded wire fabric in the panels as specified on the contract drawings.
   - Provide minimum lap for welded wire fabric in accordance with current AASHTO specifications as modified by the Design Manual part 4.
   - Do not mix the use of welded wire fabric and reinforcement steel, except as indicated.

5. Fabricated Structural Steel:
   - Provide structural steel conforming to AASHTO M270M [M270] grade 250 [36] [ASTM A709M (A709), grade 250 (36)] unless otherwise noted.
   - Provide structural steel tubing conforming to ASTM A53M [A53], grade B, Type E for the steel angled and corner posts. [Fy = 240 MPa (35 KSI)]
   - Weathering steel (A588) is not permitted.
   - Provide minimum weld size of 10mm [3/8"].
   - Non-destructive testing is required for steel post to base plate welds. Provide testing in accordance with AASHTO/AWS/D1.5M/D1.5 2002 for main member.
   - Galvanize and paint steel posts, plates, and hardware in accordance with Publication 408, Section 1105.02(s) and 1060.2(b).
   - Clean and prepare galvanized surfaces for painting in accordance with Publication 408, Section 1060.3(b)4.
   - Repair damaged galvanizing in accordance with Publication 408, Section 1105.02(s)2.

6. Anchor Bolts, Nuts, and Washers:
   - Provide anchor bolts conforming to ASTM F1554, grade 250 [36] in accordance with Publication 408, Section 1105.02(c)3.
   - Provide heavy hex nuts conforming to ASTM A563M [A563A] in accordance with Publication 408, Section 1105.02(c)3a.
   - Provide oversize washers conforming to AASHTO M270M [M270] grade 250 [36] [ASTM A709M (A709), grade 250 (36)].
   - Provide lock washers and flat washers conforming to ASTM F436M [F436] in accordance with Publication 408, Section 1105.02(c)3b.
   - Galvanize all anchor bolts and hardware in accordance with Publication 408, Section 1105.02(s).

7. Plain Neoprene Bearing Pads and Elastomeric Pads:
   - Provide unreinforced neoprene pads with a durometer hardness of 60 (+/-) 5 for 12'-0" & 16'-0" post spacings.
   - Provide reinforced neoprene pads with a durometer hardness of 80 (+/-) 5 for 20'-0" post spacings.

8. Epoxy Bonding Compound:
   - Provide epoxy bonding compound in accordance with Publication 408, Section 706.1.

9. Non-Shrink Grout:
   - Provide non-shrink grout in accordance with Publication 408, Section 1080.2(c).
   - Place non-shrink grout after the base plate is leveled on the leveling nuts.
   - Pack grout into place. Do not pour or inject grout.
   - Non-shrink grout to match final color of panel.

10. Caulking Compound:
    - Provide caulking compound in accordance with Publication 408, Section 705.8(b).
    - Caulking compound to match final color of panel.

11. Joint Sealing Material:
    - Provide joint sealing material in accordance with Publication 408, Section 705.4(a).
    - Joint sealing material to match final color of panel.

12. Joint Backing Material (Backer Rod):
    - Provide backer rod material in accordance with Publication 408, Section 705.9.

13. Antigraffiti Coating:
    - Apply antigraffiti coating in accordance with contract drawings and special provisions.
    - Apply antigraffiti coating to exposed surfaces (except sound absorptive surfaces in the field where indicated or required. See note 10 of Section 1).

14. Penetrating Concrete Stain:
    - Apply stain in accordance with contract drawings and special provisions.

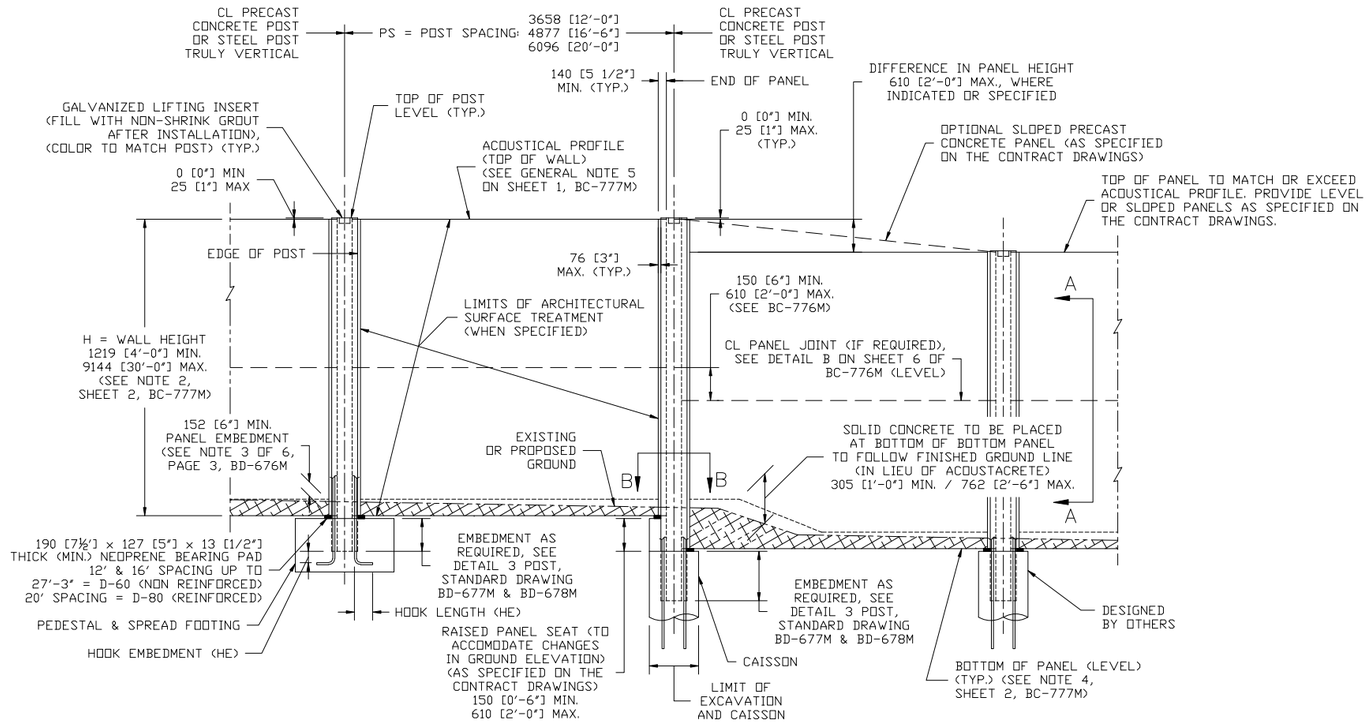

GROUND MOUNTED SOUND BARRIER ELEVATION

NO SCALE

NOTES:

1. FOR SECTION A-A, PLEASE SEE SHEET 3 OF 28.
2. FOR SECTION B-B, PLEASE SEE SHEET 4 OF 28.
3. FOR ALL DETAILS NOT SHOWN, REFER TO BD-677M & BC-777M.

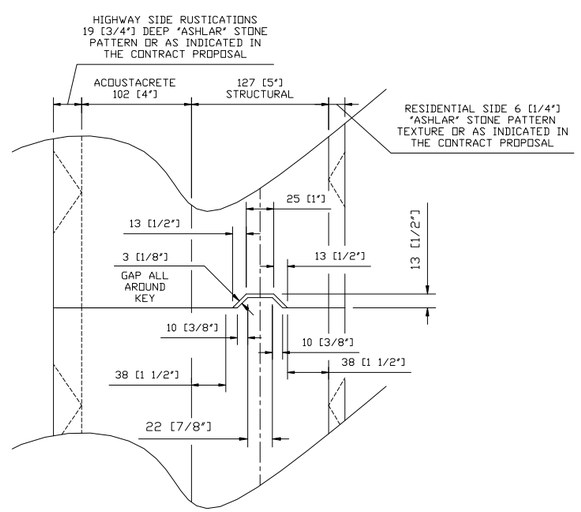

DETAIL 'Z'

NO SCALE

MARK	DESCRIPTION	BY	CHK'D.	RECM'D.	DATE

REVISIONS

OCT. 15, 2008

PENNDOT DRAWING #2000-335 PE

I hereby certify that all assumptions made in designing these sound barrier wall panels have been validated either through construction details or special notes and information to the fabricator, Erector and Contractor.

FADDIS CONCRETE PRODUCTS
3515 KING'S HIGHWAY, DOWNINGTOWN, PA 19335

AcoustaCrete®
PRECAST ABSORPTIVE SOUND BARRIER PANEL STANDARD DETAILS

MATERIAL NOTES & TYPICAL ELEVATION

SHEET 2 OF 28

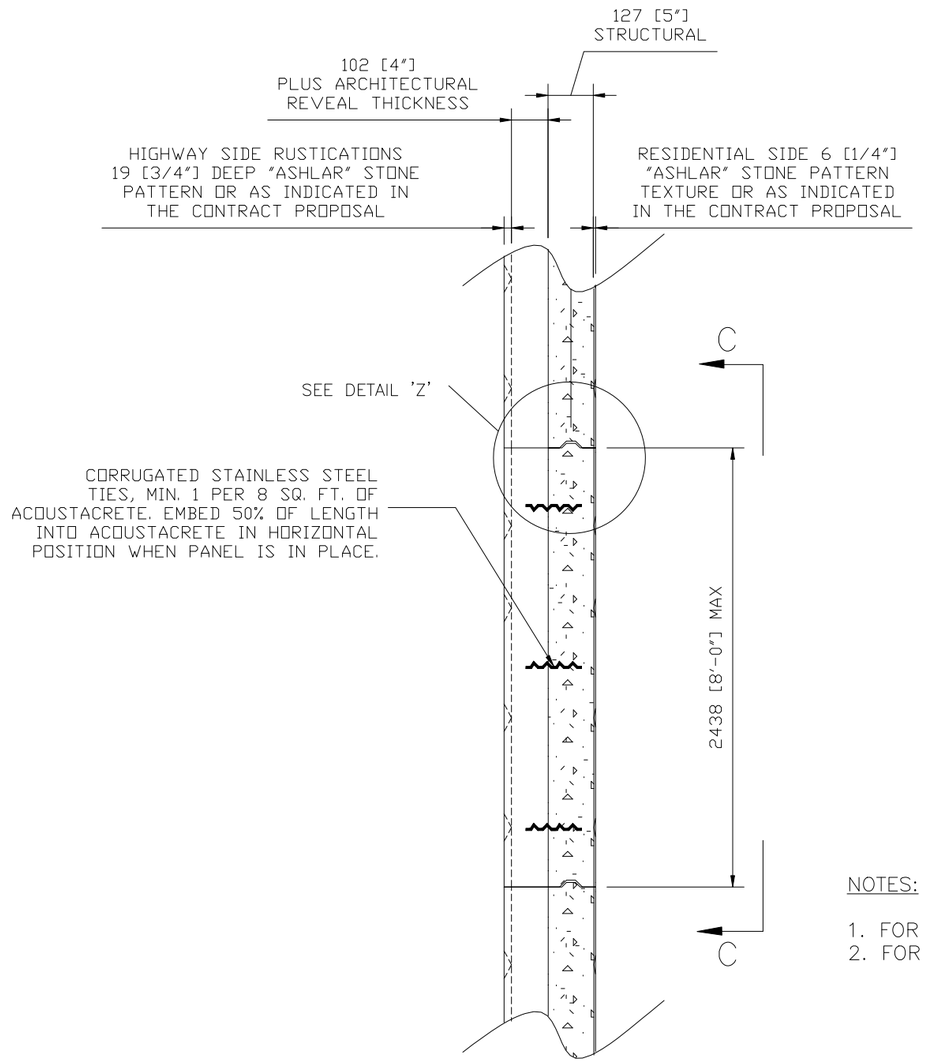

SECTION A–A

(FROM SHEET 2 OF 28)

NO SCALE

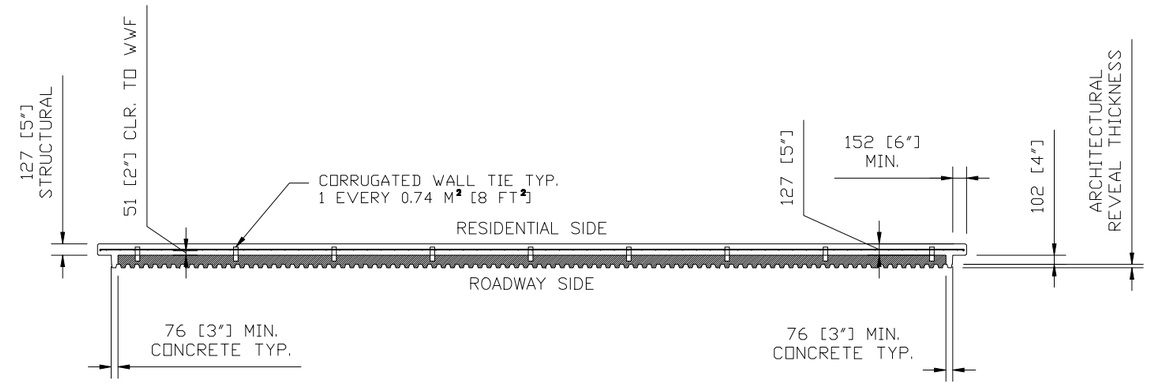

SECTION D–D

(FROM SHEET 4 OF 28)

FOR 12'–0" & 16'–0" POST SPACINGS

NO SCALE

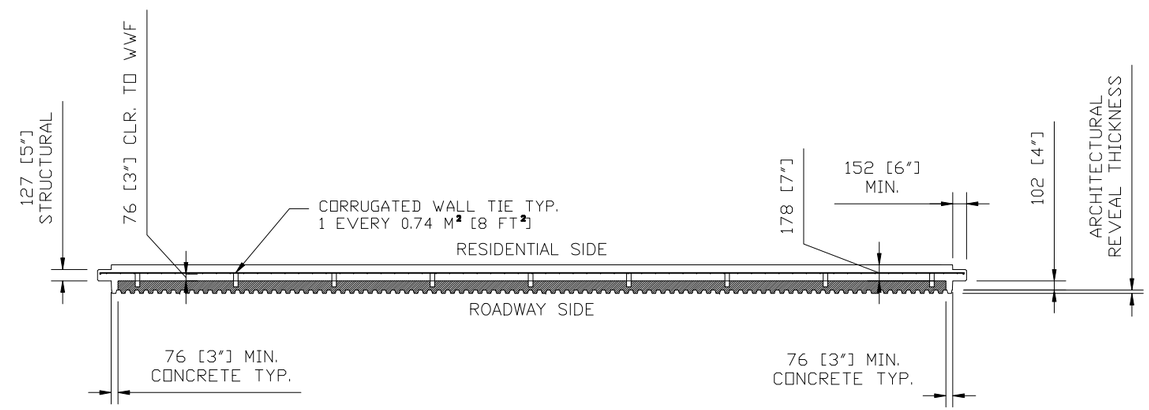

SECTION D–D

(FROM SHEET 4 OF 28)

FOR 20'–0" POST SPACINGS

NO SCALE

NOTES:

1. FOR SECTION C–C, PLEASE SEE SHEET 4 OF 28.
2. FOR ALL DETAILS NOT SHOWN, REFER TO BD–677M & BC–777M.

OCT. 15, 2008

MARK	DESCRIPTION	BY	CHK'D.	RECM'D.	DATE

REVISIONS

PENNDOT DRAWING #2000–335 PE

COMMONWEALTH OF PENNSYLVANIA REGISTERED PROFESSIONAL ENGINEER JOSEPH J. MIECZKOWSKI PE-043185-E

I hereby certify that all assumptions made in designing these sound barrier wall panels have been validated either through construction details or special notes and information to the fabricator, Erector and Contractor.

FADDIS CONCRETE PRODUCTS
3515 KING'S HIGHWAY, DOWNINGTOWN, PA 19335

AcoustaCrete®
PRECAST ABSORPTIVE SOUND BARRIER PANEL STANDARD DETAILS

TYPICAL SECTIONS (1 OF 2)

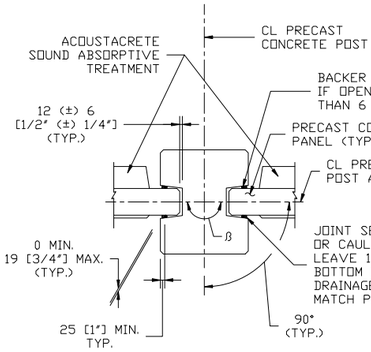

IN-LINE POST

POST TYPES 'A' & 'C' FROM BD-677M (SHEET 4)

ß = 180° (±) 12°

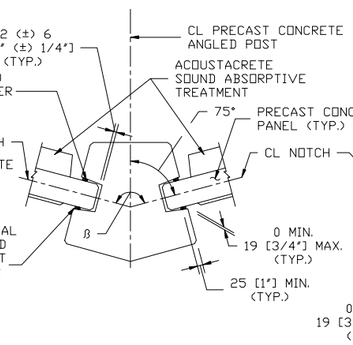

ANGLED IN-LINE POST

POST TYPE 'E' FROM BD-677M (SHEET 4)

ß = 150° (±) 12°

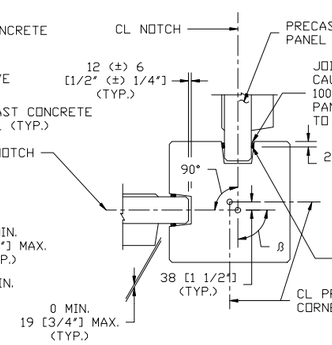

CORNER POST

POST TYPE 'F' FROM BD-677M (SHEET 4)

ß = 90° (±) 12°

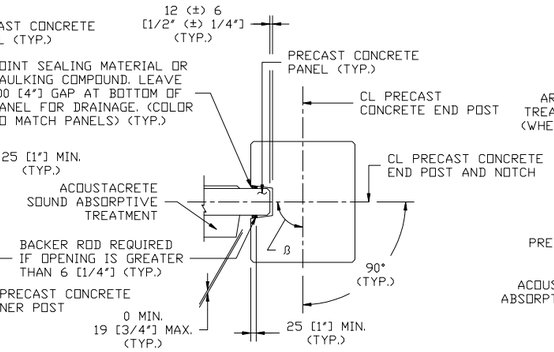

END POST

POST TYPES 'B' & 'D' FROM BD-677M (SHEET 4)

ß = 90° (±) 6°

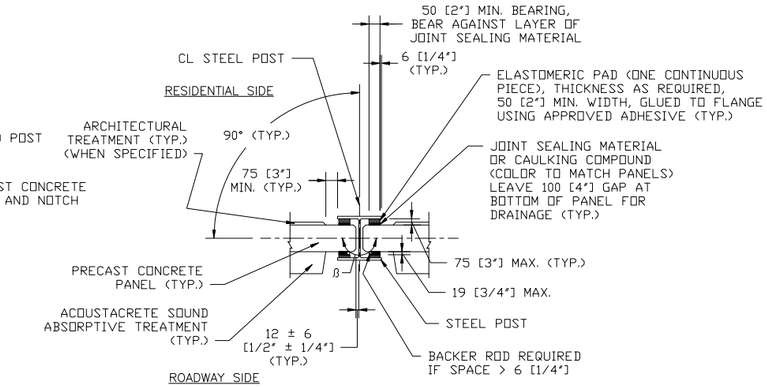

STEEL POST

(CENTERLINE OF PANEL DOES NOT HAVE TO BE CENTERLINE OF POST)

ß = 180° (±) 20°

SECTION B-B

NO SCALE

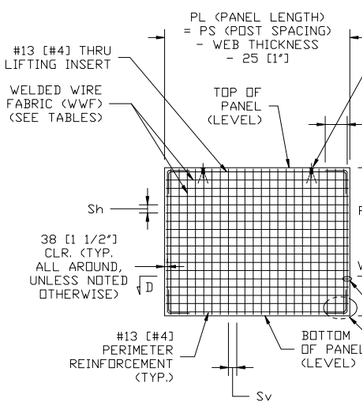

ELEVATION - LEVEL TOP

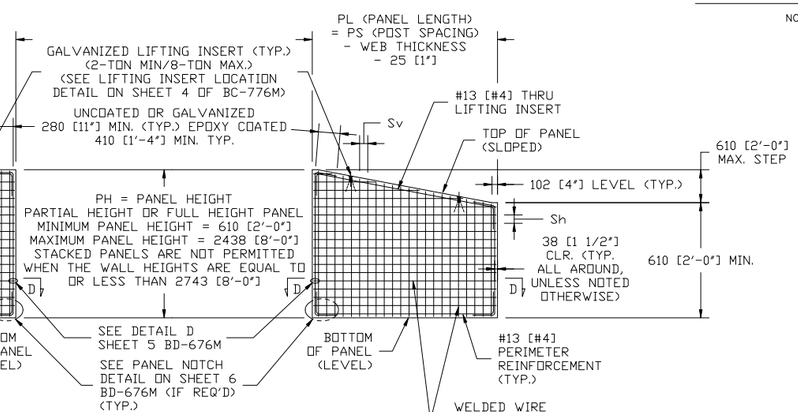

ELEVATION - SLOPED TOP

SECTION C-C

NO SCALE

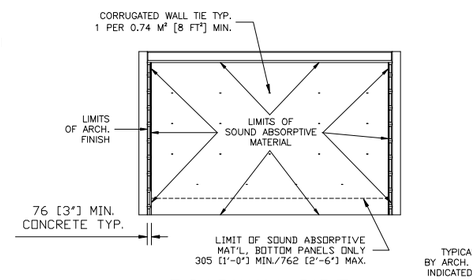

ROADWAY SIDE

(ABSORPTIVE MAT'L NOT SHOWN)

NO SCALE

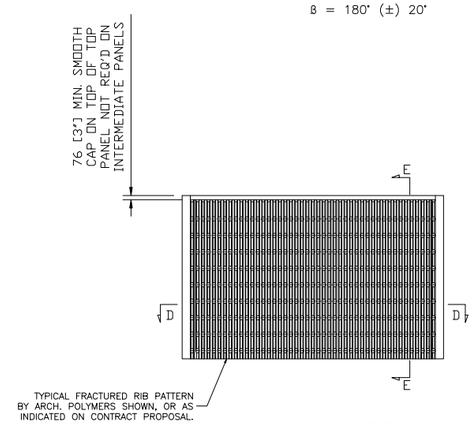

ROADWAY SIDE

NO SCALE

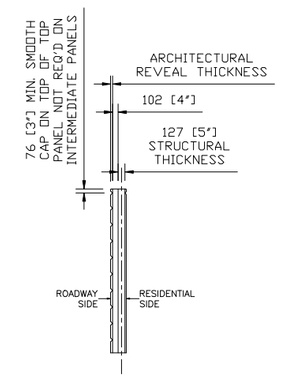

SECTION E-E

NO SCALE

NOTES:

1. FOR SECTION D-D, PLEASE REFER TO SHEET 3 OF 28.
2. FOR ALL DETAILS NOT SHOWN, REFER TO BD-677M & BC-777M.

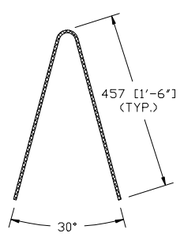

TENSION BAR DETAIL

#13 [#4]

OCT. 15, 2008

MARK	DESCRIPTION	BY	CHK'D.	RECM'D.	DATE

REVISIONS

PENNDOT DRAWING #2000-335 PE

I hereby certify that all assumptions made in designing these sound barrier wall panels have been validated either through construction details or special notes and information to the fabricator, Erector and Contractor.

FADDIS CONCRETE PRODUCTS
3515 KING'S HIGHWAY, DOWNINGTOWN, PA 19335

AcoustaCrete®
PRECAST ABSORPTIVE SOUND BARRIER PANEL STANDARD DETAILS

TYPICAL SECTIONS (2 OF 2)

SHEET 4 OF 28

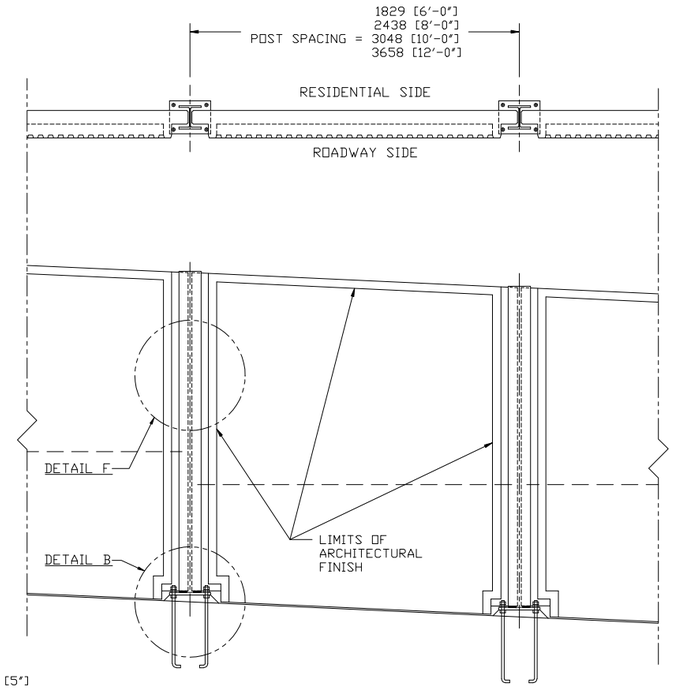

TYPICAL SOUND BARRIER ELEVATION
SLOPE BOTTOM CONDITIONS

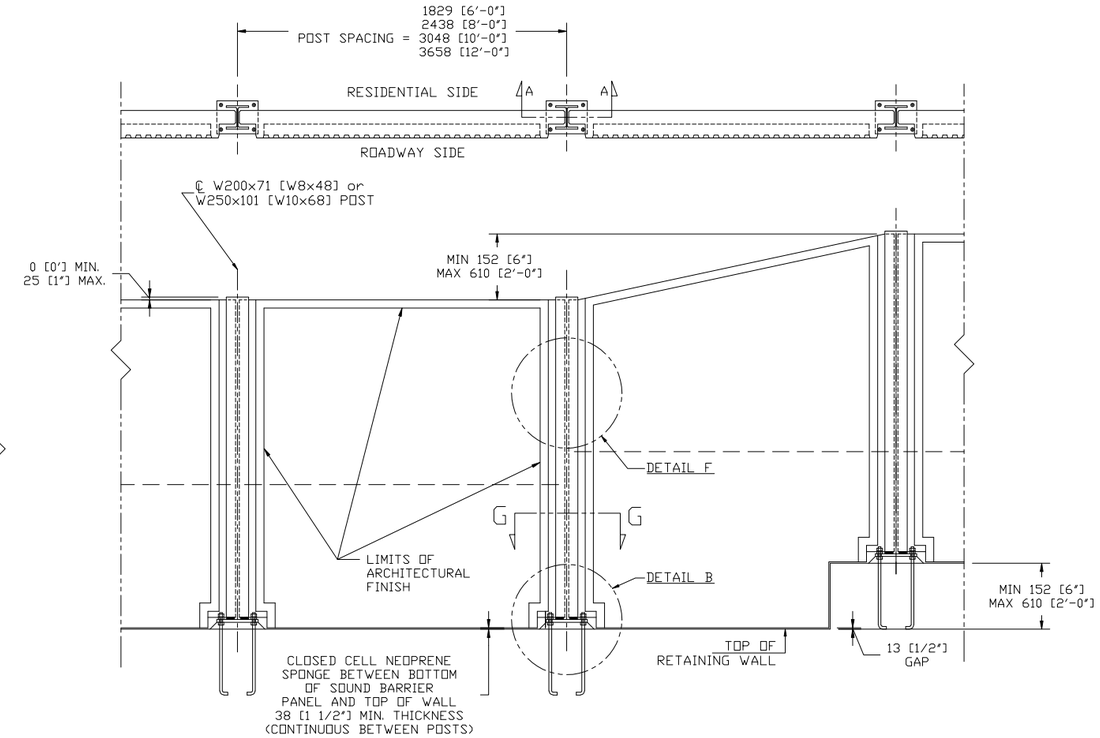

TYPICAL SOUND BARRIER ELEVATION
HORIZONTAL BOTTOMS W/ STEP CONDITIONS

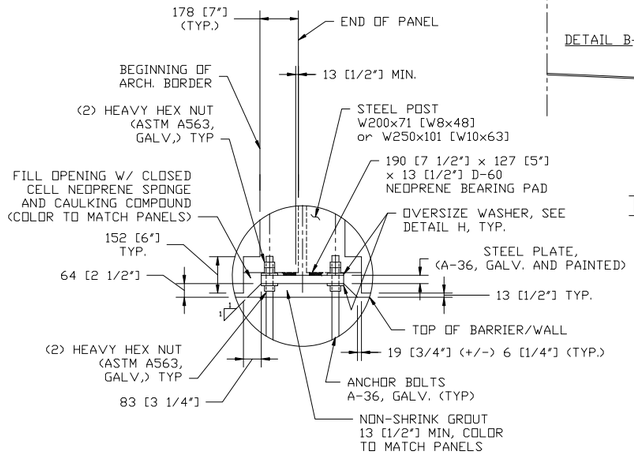

DETAIL B

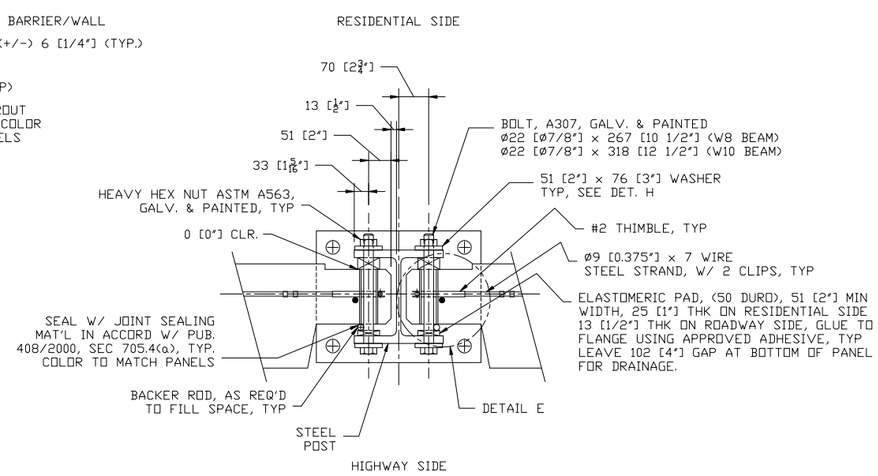

SECTION G-G

NOTES:

1. FOR ALL DETAILS NOT SHOWN, REFER TO BD-679M & BC-779M.

MARK	DESCRIPTION	BY	CHK'D.	RECM'D.	DATE

REVISIONS

OCT. 15, 2008

PENNDOT DRAWING #2000-335 PE

I hereby certify that all assumptions made in designing these sound barrier wall panels have been validated either through construction details or special notes and information to the fabricator, Erector and Contractor.

FADDIS CONCRETE PRODUCTS
3515 KING'S HIGHWAY, DOWNINGTOWN, PA 19335

AcoustaCrete®
PRECAST ABSORPTIVE SOUND BARRIER PANEL STANDARD DETAILS

STRUCTURE MOUNTED DETAILS

Precast Concrete Ground Mounted Panel Reinforcement U.S. Customary Units

Wind Pressure = 28 psf

Post Spacing PS (FT.)	Panel Height PH (FT.)	Welded Wire Fabric ** WWF A x B - WC x WD	Welded Wire Steel Area (in^2/ft) Horizontal	Vertical	Min. Number of 2 ton lifting inserts
	2.0	WWF 4 x 6 - W10 x W4	0.30	0.08	2
	4.0	WWF 4 x 6 - W8 x W4	0.24	0.08	2
	6.0	WWF 4 x 6 - W8 x W8	0.24	0.16	2
12.0	8.0	WWF 4 x 4 - W8 x W12	0.24	0.36	2
	4.0	WWF 4 x 6 - W13 x W4	0.39	0.08	2
	6.0	WWF 4 x 6 - W13 x W8	0.39	0.16	2
16.0	8.0	WWF 4 x 4 - W12 x W12	0.36	0.36	4
	4.0	WWF 4 x 6 - W20 x W4	0.60	0.08	2
	6.0	WWF 4 x 6 - W20 x W8	0.60	0.16	4
20.0	8.0	WWF 4 x 4 - W20 x W12	0.60	0.36	4

Precast Concrete Ground Mounted Panel Reinforcement Metric Units

Wind Pressure = 1.34 kPa

Post Spacing PS (mm)	Panel Height PH (mm)	Welded Wire Fabric ** WWF A x B - MWC x MWD	Welded Wire Steel Area (mm^2/m) Horizontal	Vertical	Min. Number of 2 ton lifting inserts
	610	WWF 102 x 152 - MW65 x MW26	635	171	2
	1219	WWF 102 x 152 - MW52 x MW26	510	171	2
	1829	WWF 102 x 152 - MW52 x MW52	510	342	2
3658	2438	WWF 102 x 102 - MW52 x MW77	510	755	2
	1219	WWF 102 x 152 - MW84 x MW26	826	171	2
	1829	WWF 102 x 152 - MW84 x MW52	826	342	2
4877	2438	WWF 102 x 102 - MW77 x MW77	755	755	4
	1219	WWF 102 x 152 - MW130 x MW26	1270	171	2
	1829	WWF 102 x 152 - MW130 x MW52	1270	342	4
6096	2438	WWF 102 x 102 - MW130 x MW77	1270	755	4

Precast Concrete Structure Mounted Panel Reinforcement U.S. Customary Units

Wind Pressure = 37 psf

Post Spacing PS (FT)	Panel Height PH (FT.)	Welded Wire Fabric **WWF A x B - WC x WD	Welded Wire Steel Area (in^2/ft) Horizontal	Vertical	Min. Number of 2 Ton Lifting Inserts
	4.0	WWF 6 x 6 - W4 x W4	0.08	0.08	2
	6.0	WWF 6 x 6 - W4 x W8	0.08	0.16	2
6.0	8.0	WWF 6 x 4 - W4 x W12	0.08	0.36	2
	4.0	WWF 4 x 6 - W4 x W4	0.12	0.08	2
	6.0	WWF 4 x 6 - W4 x W8	0.12	0.16	2
8.0	8.0	WWF 4 x 4 - W4 x W12	0.12	0.36	2
	4.0	WWF 4 x 6 - W9 x W4	0.27	0.08	2
	6.0	WWF 4 x 6 - W8 x W8	0.24	0.16	2
10.0	8.0	WWF 4 x 4 - W8 x W12	0.24	0.36	2
	4.0	WWF 4 x 6 - W9 x W4	0.27	0.08	2
	6.0	WWF 4 x 6 - W8 x W8	0.24	0.16	2
12.0	8.0	WWF 4 x 4 - W8 x W12	0.24	0.36	2

Precast Concrete Structure Mounted Panel Reinforcement Metric Units

Wind Pressure = 1.77 kPa

Post Spacing PS (FT)	Panel Height PH (FT.)	Welded Wire Fabric **WWF A x B - MWC x MWD	Welded Wire Steel Area (mm^2/m) Horizontal	Vertical	Min. Number of 2 Ton Lifting Inserts
	1219	WWF152 x 152 - MW26 x W26	170	170	2
	1829	WWF152 x 152 - MW26 x W52	170	339	2
1829	2438	WWF152 x 102 - MW26 x W77	170	759	2
	1219	WWF102 x 152 - MW26 x W26	253	170	2
	1829	WWF102 x 152 - MW26 x W52	253	339	2
2438	2438	WWF102 x 102 - MW26 x W77	253	759	2
	1219	WWF102 x 152 - MW58 x W26	569	170	2
	1829	WWF102 x 152 - MW52 x W52	505	339	2
3048	2438	WWF102 x 102 - MW52 x W77	505	759	2
	1219	WWF102 x 152 - MW58 x W26	569	170	2
	1829	WWF102 x 152 - MW52 x W52	505	339	2
3658	2438	WWF102 x 102 - MW52 x W77	505	759	2

NOTES:

1. FOR ALL DETAILS NOT SHOWN, REFER TO BD-677M & BC-777M.
2. GROUND MOUNTED PANEL CHARTS ARE DERIVED FROM BD-676M, SHEET 5.
3. STRUCTURE MOUNTED PANEL CHARTS ARE DERIVED FROM BD-679M, SHEET 6.

OCT. 15, 2008

** WWF AxB-WCxWD (U.S. CUSTOMARY)
WWF AxB-MWCxMWD (METRIC)
WHERE A = SPACING OF HORIZONTAL BARS (S_H)
B = SPACING OF VERTICAL BARS (S_V)
C = HORIZONTAL WIRE SIZE
D = VERTICAL WIRE SIZE
WWF = WELDED WIRE FABRIC

MARK	DESCRIPTION	BY	CHK'D.	RECM'D.	DATE

REVISIONS

PENNDOT DRAWING #2000-335 PE

COMMONWEALTH OF PENNSYLVANIA REGISTERED PROFESSIONAL ENGINEER JOSEPH J. MIECZKOWSKI PE-043189-E

I hereby certify that all assumptions made in designing these sound barrier wall panels have been validated either through construction details or special notes and information to the fabricator, Erector and Contractor.

FADDIS CONCRETE PRODUCTS
3515 KING'S HIGHWAY, DOWNINGTOWN, PA 19335

AcoustaCrete®
PRECAST ABSORPTIVE SOUND BARRIER PANEL STANDARD DETAILS

PANEL REINFORCEMENT CHARTS

Detail 1
Precast Concrete Post Type A and B
U.S. Customary Units

Precast Concrete Post With Base Plate
Connection to Caisson
Height Zone 0' - 14'
Wind Pressure = 20 psf

CONCRETE POST			BASE PLATE				ANCHOR BOLTS	
POST SPACING PS (FT.)	WALL HEIGHT H (FT.)	A1 (Bar Size)	t (IN.)	i (IN.)	w (IN.)	F (IN.)	D (IN.)	P (IN.)
	5.5	#5	3/4	26	16	1 1/2	3/4	5
	7.5	#5	3/4	26	16	1 1/2	3/4	5
	9.5	#5	3/4	27	16	2	1	5 3/4
	11.5	#5	7/8	27	16	2	1	5 3/4
	13.5	#5	1	27	16	2	1	6
	15.5	#6	1 1/8	28	16	2 1/4	1 1/4	6 3/4
	17.5	#6	1 3/8	28	16	2 1/4	1 1/4	7
	19.5	#7	1 1/2	28	16	2 1/4	1 1/4	7 1/4
	21.5	#8	1 3/4	28	16	2 1/4	1 1/4	7 1/4
12.0	23.5	#8	1 7/8	29	16	2 3/4	1 1/2	8 1/4
	5.5	#5	3/4	26	16	1 1/2	3/4	5
	7.5	#5	3/4	27	16	2	1	5 3/4
	9.25	#5	7/8	27	16	2	1	5 3/4
	11.25	#5	1	27	16	2	1	6
	13.25	#6	1 1/4	28	16	2 1/4	1 1/4	6 3/4
	15.25	#7	1 3/8	28	16	2 1/4	1 1/4	7
	17.25	#7	1 5/8	28	16	2 1/4	1 1/4	7 1/4
16.0	19.25	#8	1 3/4	29	16	2 3/4	1 1/2	8 1/4
	5.25	#5	3/4	26	16	1 1/2	3/4	5
	7.25	#5	3/4	27	16	2	1	5 3/4
	9.25	#5	7/8	27	16	2	1	5 3/4
	11.25	#6	1 1/8	28	16	2 1/4	1 1/4	6 3/4
	13.25	#6	1 3/8	28	16	2 1/4	1 1/4	7
	15.25	#7	1 5/8	28	16	2 1/4	1 1/4	7 1/4
20.0	17.25	#8	1 7/8	29	16	2 3/4	1 1/2	8 1/4

Detail 1
Precast Concrete Post Type A and B
Metric Units

Precast Concrete Post With Base Plate
Connection to Caisson
Height Zone 0 - 4267
Wind Pressure = 0.96 kPa

CONCRETE POST			BASE PLATE				ANCHOR BOLTS	
POST SPACING PS (mm)	WALL HEIGHT H (mm)	A1 (Bar Size)	t (mm)	i (mm)	w (mm)	F (mm)	D (mm)	P (mm)
	1676	#16	19	660	406	38	19.1	127
	2286	#16	19	660	406	38	19.1	127
	2896	#16	19	686	406	51	25.4	146
	3505	#16	22	686	406	51	25.4	146
	4115	#16	25	686	406	51	25.4	152
	4724	#19	29	711	406	57	31.8	171
	5334	#19	35	711	406	57	31.8	178
	5944	#22	38	711	406	57	31.8	184
	6553	#25	44	711	406	57	31.8	184
3658	7163	#25	48	737	406	70	38.1	210
	1676	#16	19	660	406	38	19.1	127
	2286	#16	19	686	406	51	25.4	146
	2819	#16	22	686	406	51	25.4	146
	3429	#16	25	686	406	51	25.4	152
	4039	#19	32	711	406	57	31.8	171
	4648	#22	35	711	406	57	31.8	178
	5258	#22	41	711	406	57	31.8	184
4877	5867	#25	44	737	406	70	38.1	210
	1600	#16	19	660	406	38	19.1	127
	2210	#16	19	686	406	51	25.4	146
	2819	#16	22	686	406	51	25.4	146
	3429	#19	29	711	406	57	31.8	171
	4039	#19	38	711	406	57	31.8	178
	4648	#22	41	711	406	57	31.8	184
6096	5258	#25	48	737	406	70	38.1	210

Detail 1
Precast Concrete Post Type A and B
Metric Units

Precast Concrete Post With Base Plate
Connection to Caisson
Height Zones Over 4267
Wind Pressure = 1.34 kPa

CONCRETE POST			BASE PLATE				ANCHOR BOLTS	
POST SPACING PS (mm)	WALL HEIGHT H (mm)	A1 (Bar Size)	t (mm)	i (mm)	w (mm)	F (mm)	D (mm)	P (mm)
	1676	#16	19	660	406	38	19.1	127
	2286	#16	19	686	406	51	25.4	146
	2896	#16	22	686	406	51	25.4	146
	3505	#16	25	686	406	51	25.4	152
	4115	#19	32	711	406	57	31.8	178
	4724	#22	35	711	406	57	31.8	178
	5334	#25	41	711	406	57	31.8	184
3658	5944	#25	48	737	406	70	38.1	210
	1676	#16	19	660	406	38	19.1	127
	2286	#16	19	686	406	51	25.4	146
	2819	#16	25	686	406	51	25.4	152
	3429	#19	32	711	406	57	31.8	178
	4039	#22	38	711	406	57	31.8	178
	4648	#25	44	711	406	57	31.8	184
4877	4953	#25	48	737	406	70	38.1	210
	1676	#16	19	686	406	51	25.4	146
	2286	#16	22	686	406	51	25.4	146
	2896	#19	29	711	406	57	31.8	171
	3505	#22	35	711	406	57	31.8	178
	4115	#25	41	711	406	57	31.8	184
6096	4420	#25	44	737	406	70	38.1	210

Detail 1
Precast Concrete Post Type A and B
U.S. Customary Units

Precast Concrete Post With Base Plate
Connection to Caisson
Height Zones Over 14'
Wind Pressure = 28 psf

CONCRETE POST			BASE PLATE				ANCHOR BOLTS	
POST SPACING PS (FT.)	WALL HEIGHT H (FT.)	A1 (Bar Size)	t (IN.)	i (IN.)	w (IN.)	F (IN.)	D (IN.)	P (IN.)
	5.5	#5	3/4	26	16	1 1/2	3/4	5
	7.5	#5	3/4	27	16	2	1	5 3/4
	9.5	#5	7/8	27	16	2	1	5 3/4
	11.5	#5	1	27	16	2	1	6
	13.5	#6	1 1/4	28	16	2 1/4	1 1/4	7
	15.5	#7	1 3/8	28	16	2 1/4	1 1/4	7
	17.5	#8	1 5/8	28	16	2 1/4	1 1/4	7 1/4
12.0	19.5	#8	1 7/8	29	16	2 3/4	1 1/2	8 1/4
	5.5	#5	3/4	26	16	1 1/2	3/4	5
	7.5	#5	3/4	27	16	2	1	5 3/4
	9.25	#5	1	27	16	2	1	6
	11.25	#6	1 1/4	28	16	2 1/4	1 1/4	7
	13.25	#7	1 1/2	28	16	2 1/4	1 1/4	7
	15.25	#8	1 3/4	28	16	2 1/4	1 1/4	7 1/4
16.0	16.25	#8	1 7/8	29	16	2 3/4	1 1/2	8 1/4
	5.5	#5	3/4	27	16	2	1	5 3/4
	7.5	#5	7/8	27	16	2	1	5 3/4
	9.5	#6	1 1/8	28	16	2 1/4	1 1/4	6 3/4
	11.5	#7	1 3/8	28	16	2 1/4	1 1/4	7
	13.5	#8	1 5/8	28	16	2 1/4	1 1/4	7 1/4
20.0	14.5	#8	1 3/4	29	16	2 3/4	1 1/2	8 1/4

NOTES:

1. POST TYPES 'A', 'B', 'C', & 'D' ARE SHOWN ON BD-677M (SHEET 4 OF 28).
2. FOR "DETAIL 1", SEE BD-677M (SHEET 5 OF 28).
3. THESE CHARTS ARE DERIVED FROM BD-677M (SHEETS 6, 7, 8, & 9 OF 28).
4. FOR ALL DETAILS NOT SHOWN, REFER TO BD-677M & BC-777M.

OCT. 15, 2008

MARK	DESCRIPTION	BY	CHK'D.	RECM'D.	DATE

REVISIONS

PENNDOT DRAWING #2000-335 PE

COMMONWEALTH OF PENNSYLVANIA
REGISTERED PROFESSIONAL
JOSEPH J. MIECZKOWSKI
ENGINEER
PE-043189-E

I hereby certify that all assumptions made in designing these sound barrier wall panels have been validated either through construction details or special notes and information to the fabricator, Erector and Contractor.

FADDIS CONCRETE PRODUCTS
3515 KING'S HIGHWAY, DOWNINGTOWN, PA 19335

AcoustaCrete®
PRECAST ABSORPTIVE
SOUND BARRIER PANEL
CONCRETE POSTS

BASE PLATE TO CAISSON (1 OF 3)

Detail 1
Precast Post Type C and D
U.S. Customary Units

Precast Concrete Post With Base Plate
Connection to Caisson
Height Zone 0' - 14'
Wind Pressure = 20 psf

CONCRETE POST			BASE PLATE				ANCHOR BOLTS	
POST SPACING PS (FT.)	WALL HEIGHT H (FT.)	A1 (Bar Size)	t (IN.)	t' (IN.)	w (IN.)	F (IN.)	D (IN.)	P (IN.)
	5.5	#5	3/4	29	19	1 1/2	3/4	5
	7.5	#5	3/4	29	19	1 1/2	3/4	5
	9.5	#5	3/4	30	19	2	1	5 3/4
	11.5	#5	7/8	30	19	2	1	5 3/4
	13.5	#6	1	30	19	2	1	6
	15.5	#6	1 1/8	31	19	2 1/4	1 1/4	6 3/4
	17.5	#6	1 1/8	31	19	2 1/4	1 1/4	6 3/4
	19.5	#7	1 1/4	31	19	2 1/4	1 1/4	7
	21.5	#7	1 3/8	31	19	2 1/4	1 1/4	7
	23.5	#8	1 1/2	32	19	2 3/4	1 1/2	8
	25.5	#8	1 5/8	32	19	2 3/4	1 1/2	8
12.0	27.5	#9	1 7/8	32	19	2 3/4	1 1/2	8 1/4
	5.5	#5	3/4	29	19	1 1/2	3/4	5
	7.5	#5	3/4	30	19	2	1	5 3/4
	9.5	#5	3/4	30	19	2	1	5 3/4
	11.25	#6	7/8	30	19	2	1	5 3/4
	13.25	#6	1	31	19	2 1/4	1 1/4	6 3/4
	15.25	#6	1 1/8	31	19	2 1/4	1 1/4	6 3/4
	17.25	#7	1 3/8	31	19	2 1/4	1 1/4	7
	19.25	#7	1 1/2	31	19	2 1/4	1 1/4	7 1/4
	21.25	#8	1 5/8	32	19	2 3/4	1 1/2	8
	23.25	#9	1 7/8	32	19	2 3/4	1 1/2	8 1/4
	25.25	#10	2	33	19	3	1 3/4	9 1/4
16.0	27.25	#10	2 1/4	33	19	3	1 3/4	9 1/2
	5.25	#5	3/4	29	19	1 1/2	3/4	5
	7.25	#5	3/4	30	19	2	1	5 3/4
	9.25	#5	7/8	30	19	2	1	5 3/4
	11.25	#6	1	31	19	2 1/4	1 1/4	6 3/4
	13.25	#6	1 1/8	31	19	2 1/4	1 1/4	6 3/4
	15.25	#7	1 3/8	31	19	2 1/4	1 1/4	7
	17.25	#8	1 1/2	31	19	2 1/4	1 1/4	7 1/4
	19.25	#8	1 3/4	32	19	2 3/4	1 1/2	8 1/4
	21.25	#9	1 7/8	32	19	2 3/4	1 1/2	8 1/4
	23.25	#10	2 1/8	33	19	3	1 3/4	9 1/4
	25.25	#11	2 3/8	33	19	3	1 3/4	9 1/2
20.0	26.25	#11	2 1/2	34	19	3 1/2	2	10 1/2

Detail 1
Precast Post Type C and D
U.S. Customary Units

Precast Concrete Post With Base Plate
Connection to Caisson
Height Zones Over 14'
Wind Pressure = 28 psf

CONCRETE POST			BASE PLATE				ANCHOR BOLTS	
POST SPACING PS (FT.)	WALL HEIGHT H (FT.)	A1 (Bar Size)	t (IN.)	t' (IN.)	w (IN.)	F (IN.)	D (IN.)	P (IN.)
	5.5	#5	3/4	29	19	1 1/2	3/4	5
	7.5	#5	3/4	30	19	2	1	5 3/4
	9.5	#5	3/4	30	19	2	1	5 3/4
	11.5	#6	7/8	30	19	2	1	5 3/4
	13.5	#5	1	31	19	2 1/4	1 1/4	6 3/4
	15.5	#6	1 1/4	31	19	2 1/4	1 1/4	7
	17.5	#7	1 3/8	31	19	2 1/4	1 1/4	7
	19.5	#8	1 1/2	32	19	2 3/4	1 1/2	8
	21.5	#8	1 3/4	32	19	2 3/4	1 1/2	8 1/4
	23.5	#9	1 7/8	32	19	2 3/4	1 1/2	8 1/4
	25.5	#10	2 1/8	33	19	3	1 3/4	9 1/4
	27.5	#11	2 3/8	33	19	3	1 3/4	9 1/2
12.0	29.5	#11	2 1/2	34	19	3 1/2	2	10 1/2
	5.5	#5	3/4	29	19	1 1/2	3/4	5
	7.5	#5	3/4	30	19	2	1	5 3/4
	9.25	#5	7/8	30	19	2	1	5 3/4
	11.25	#6	1	31	19	2 1/4	1 1/4	6 3/4
	13.25	#6	1 1/4	31	19	2 1/4	1 1/4	7
	15.25	#7	1 3/8	31	19	2 1/4	1 1/4	7
	17.25	#8	1 5/8	32	19	2 3/4	1 1/2	8
	19.25	#9	1 7/8	32	19	2 3/4	1 1/2	8 1/4
	21.5	#10	2 1/8	33	19	3	1 3/4	9 1/4
	23.5	#10	2 1/4	33	19	3	1 3/4	9 1/2
16.0	25.5	#11	2 1/2	34	19	3 1/2	2	10 1/2
	5.5	#5	3/4	30	19	2	1	5 3/4
	7.5	#5	3/4	30	19	2	1	5 3/4
	9.5	#6	1	31	19	2 1/4	1 1/4	6 3/4
	11.5	#6	1 1/8	31	19	2 1/4	1 1/4	6 3/4
	13.5	#7	1 3/8	31	19	2 1/4	1 1/4	7
	15.5	#8	1 5/8	32	19	2 3/4	1 1/2	8
	17.5	#9	1 7/8	32	19	2 3/4	1 1/2	8 1/4
	19.5	#10	2 1/8	33	19	3	1 3/4	9 1/4
	21.5	#11	2 3/8	33	19	3	1 3/4	9 1/2
20.0	22.5	#11	2 1/2	34	19	3 1/2	2	10 1/2

NOTES:

1. POST TYPES 'A', 'B', 'C', & 'D' ARE SHOWN ON BD-677M (SHEET 4 OF 28).
2. FOR "DETAIL 1", SEE BD-677M (SHEET 5 OF 28).
3. THESE CHARTS ARE DERIVED FROM BD-677M (SHEETS 6, 7, 8, & 9 OF 28).
4. FOR ALL DETAILS NOT SHOWN, REFER TO BD-677M & BC-777M.

OCT. 15, 2008

MARK	DESCRIPTION	BY	CHK'D.	RECM'D.	DATE

REVISIONS

PENNDOT DRAWING #2000-335 PE

COMMONWEALTH OF PENNSYLVANIA
REGISTERED PROFESSIONAL
JOSEPH J. MIECZKOWSKI
ENGINEER
PE-043189-E

I hereby certify that all assumptions made in designing these sound barrier wall panels have been validated either through construction details or special notes and information to the fabricator, Erector and Contractor.

FADDIS CONCRETE PRODUCTS
3515 KING'S HIGHWAY, DOWNINGTOWN, PA 19335

AcoustaCrete®
PRECAST ABSORPTIVE
SOUND BARRIER PANEL
CONCRETE POSTS

BASE PLATE TO CAISSON (2 OF 3)

Detail 1
Precast Post Type C and D
Metric Units

Precast Concrete Post With Base Plate
Connection to Caisson
Height Zone 0 - 4267
Wind Pressure = 0.96 kPa

CONCRETE POST			BASE PLATE				ANCHOR BOLTS	
POST SPACING PS (mm)	WALL HEIGHT H (mm)	A1 (Bar Size)	t (mm)	r (mm)	w (mm)	F (mm)	D (mm)	P (mm)
	1676	#16	19	737	483	38	19.1	127
	2286	#16	19	737	483	38	19.1	127
	2896	#16	19	762	483	51	25.4	146
	3505	#16	22	762	483	51	25.4	146
	4115	#19	25	762	483	51	25.4	152
	4724	#19	29	787	483	57	31.8	171
	5334	#19	29	787	483	57	31.8	171
	5944	#22	32	787	483	57	31.8	178
	6553	#22	35	787	483	57	31.8	178
	7163	#25	38	813	483	70	38.1	203
	7772	#25	41	813	483	70	38.1	203
3658	8382	#29	48	813	483	70	38.1	210
	1676	#16	19	737	483	38	19.1	127
	2286	#16	19	762	483	51	25.4	146
	2896	#16	19	762	483	51	25.4	146
	3429	#19	22	762	483	51	25.4	146
	4039	#19	25	787	483	57	31.8	171
	4648	#19	29	787	483	57	31.8	171
	5258	#22	35	787	483	57	31.8	178
	5867	#22	38	787	483	57	31.8	184
	6477	#25	41	813	483	70	38.1	203
	7087	#29	48	813	483	70	38.1	210
	7696	#32	51	838	483	76	44.5	235
4877	8306	#32	57	838	483	76	44.5	241
	1600	#16	19	737	483	38	19.1	127
	2210	#16	19	762	483	51	25.4	146
	2819	#16	22	762	483	51	25.4	146
	3429	#19	25	787	483	57	31.8	171
	4039	#19	29	787	483	57	31.8	171
	4648	#22	35	787	483	57	31.8	178
	5258	#25	38	787	483	57	31.8	184
	5867	#25	44	813	483	70	38.1	210
	6477	#29	48	813	483	70	38.1	210
	7087	#32	54	838	483	76	44.5	235
	7696	#36	60	838	483	76	44.5	241
6096	8001	#36	64	864	438	89	50.8	267

Detail 1
Precast Post Type C and D
Metric Units

Precast Concrete Post With Base Plate
Connection to Caisson
Height Zones Over 4267
Wind Pressure = 1.34 kPa

CONCRETE POST			BASE PLATE				ANCHOR BOLTS	
POST SPACING PS (mm)	WALL HEIGHT H (mm)	A1 (Bar Size)	t (mm)	r (mm)	w (mm)	F (mm)	D (mm)	P (mm)
	1676	#16	19	737	483	38	19.1	127
	2286	#16	19	762	483	51	25.4	146
	2896	#16	19	762	483	51	25.4	146
	3505	#19	22	762	483	51	25.4	146
	4115	#19	25	787	483	57	31.8	171
	4724	#19	32	787	483	57	31.8	178
	5334	#22	35	787	483	57	31.8	178
	5944	#25	38	813	483	70	38.1	203
	6553	#25	44	813	483	70	38.1	210
	7163	#29	48	813	483	70	38.1	210
	7772	#32	54	838	483	76	44.5	235
	8382	#36	60	838	483	76	44.5	241
3658	8992	#36	64	864	483	89	50.8	267
	1676	#16	19	737	483	38	19.1	127
	2286	#16	19	762	483	51	25.4	146
	2819	#16	22	762	483	51	25.4	146
	3429	#19	25	787	483	57	31.8	171
	4039	#19	32	787	483	57	31.8	178
	4648	#22	35	787	483	57	31.8	178
	5258	#25	41	813	483	70	38.1	203
	5867	#29	48	813	483	70	38.1	210
	6553	#32	54	838	483	76	44.5	235
	7163	#32	57	838	483	76	44.5	241
4877	7772	#36	64	864	483	89	50.8	267
	1676	#16	19	762	483	51	25.4	146
	2286	#16	19	762	483	51	25.4	146
	2896	#19	25	787	483	57	31.8	171
	3505	#19	29	787	483	57	31.8	171
	4115	#22	35	787	483	57	31.8	178
	4724	#25	41	813	483	70	38.1	203
	5334	#29	48	813	483	70	38.1	210
	5944	#32	54	838	483	76	44.5	235
	6553	#36	60	838	483	76	44.5	241
6096	6858	#36	64	864	483	89	50.8	267

NOTES:

1. POST TYPES 'A', 'B', 'C', & 'D' ARE SHOWN ON BD-677M (SHEET 4 OF 28).
2. FOR "DETAIL 1", SEE BD-677M (SHEET 5 OF 28).
3. THESE CHARTS ARE DERIVED FROM BD-677M (SHEETS 6, 7, 8, & 9 OF 28).
4. FOR ALL DETAILS NOT SHOWN, REFER TO BD-677M & BC-777M.

OCT. 15, 2008

MARK	DESCRIPTION	BY	CHK'D.	RECM'D.	DATE

REVISIONS

PENNDOT DRAWING #2000-335 PE

COMMONWEALTH OF PENNSYLVANIA
REGISTERED PROFESSIONAL
JOSEPH J. MIECZKOWSKI
ENGINEER
PE-043189-E

I hereby certify that all assumptions made in designing these sound barrier wall panels have been validated either through construction details or special notes and information to the fabricator, Erector and Contractor.

FADDIS CONCRETE PRODUCTS
3515 KING'S HIGHWAY, DOWNINGTOWN, PA 19335

AcoustaCrete®
PRECAST ABSORPTIVE
SOUND BARRIER PANEL
CONCRETE POSTS

BASE PLATE TO CAISSON (3 OF 3)

Detail 2
Precast Concrete Post Type A and B
U.S. Customary Units

Precast Concrete Post With Base Plate
Connection to Spread Footing
Height Zone 0' - 14'
Wind Pressure = 20 psf

CONCRETE POST			BASE PLATE				ANCHOR BOLTS			Spread Footing			
POST SPACING PS (FT.)	WALL HEIGHT H (FT.)	A1 (BAR SIZE)	t (IN.)	i' (IN.)	w (IN.)	F (IN.)	D (IN.)	S (IN.)	P (IN.)	T (FT.)	L (FT.)	W (FT.)	F1 (Bar Size)
	5.5	#5	3/4	26	16	1 1/2	3/4	17	5	2.0	5.0	5.0	#4
	7.5	#5	3/4	26	16	1 1/2	3/4	17	5	2.0	5.0	5.0	#4
	9.5	#5	3/4	27	16	2	1	22	5 3/4	2.5	5.0	5.0	#4
	11.5	#5	7/8	27	16	2	1	22	5 3/4	2.5	6.0	5.0	#4
	13.5	#5	1	27	16	2	1	22	6	2.5	6.5	5.0	#4
	15.5	#6	1 1/8	28	16	2 1/4	1 1/4	28	6 3/4	3.0	7.0	5.0	#4
	17.5	#6	1 3/8	28	16	2 1/4	1 1/4	28	7	3.0	8.0	5.0	#4
	19.5	#7	1 1/2	28	16	2 1/4	1 1/4	28	7 1/4	3.0	8.5	5.0	#4
	21.5	#8	1 3/4	28	16	2 1/4	1 1/4	28	7 1/4	3.0	9.5	5.0	#5
12.0	23.5	#8	1 7/8	29	16	2 3/4	1 1/2	33	8 1/4	3.25	10.0	5.0	#5
	5.5	#5	3/4	26	16	1 1/2	3/4	17	5	2.0	5.0	5.0	#4
	7.5	#5	3/4	27	16	2	1	22	5 3/4	2.5	5.0	5.0	#4
	9.25	#5	7/8	27	16	2	1	22	5 3/4	2.5	5.5	5.0	#4
	11.25	#5	1	27	16	2	1	22	6	2.5	6.5	5.0	#4
	13.25	#6	1 1/4	28	16	2 1/4	1 1/4	28	6 3/4	3.0	7.0	5.0	#4
	15.25	#7	1 3/8	28	16	2 1/4	1 1/4	28	7	3.0	8.0	5.0	#4
	17.25	#7	1 5/8	28	16	2 1/4	1 1/4	28	7 1/4	3.0	9.0	5.0	#5
16.0	19.25	#8	1 3/4	29	16	2 3/4	1 1/2	33	8 1/4	3.25	9.5	5.0	#5
	5.25	#5	3/4	26	16	1 1/2	3/4	17	5	2.0	5.0	5.0	#4
	7.25	#5	3/4	27	16	2	1	22	5 3/4	2.5	5.0	5.0	#4
	9.25	#5	7/8	27	16	2	1	22	5 3/4	2.5	6.0	5.0	#4
	11.25	#6	1 1/8	28	16	2 1/4	1 1/4	28	6 3/4	3.0	7.0	5.0	#4
	13.25	#6	1 3/8	28	16	2 1/4	1 1/4	28	7	3.0	8.0	5.0	#4
	15.25	#7	1 5/8	28	16	2 1/4	1 1/4	28	7 1/4	3.0	8.5	5.0	#5
20.0	17.25	#8	1 7/8	29	16	2 3/4	1 1/2	33	8 1/4	3.25	9.5	5.0	#5

Detail 2
Precast Concrete Post Type A and B
U.S. Customary Units

Precast Concrete Post With Base Plate
Connection to Spread Footing
Height Zones Over 14'
Wind Pressure = 28 psf

CONCRETE POST			BASE PLATE				ANCHOR BOLTS			Spread Footing			
POST SPACING PS (FT.)	WALL HEIGHT H (FT.)	A1 (BAR SIZE)	t (IN.)	i' (IN.)	w (IN.)	F (IN.)	D (IN.)	S (IN.)	P (IN.)	T (FT.)	L (FT.)	W (FT.)	F1 (Bar Size)
	5.5	#5	3/4	26	16	1 1/2	3/4	17	5	2	5	5	#4
	7.5	#5	3/4	27	16	2	1	22	5 3/4	2.5	5.5	5	#4
	9.5	#5	7/8	27	16	2	1	22	5 3/4	2.5	6.5	5	#4
	11.5	#5	1	27	16	2	1	22	6	2.5	7.5	5	#4
	13.5	#6	1 1/4	28	16	2 1/4	1 1/4	28	7	3	8	5	#4
	15.5	#7	1 3/8	28	16	2 1/4	1 1/4	28	7	3	9	5	#4
	17.5	#8	1 5/8	28	16	2 1/4	1 1/4	28	7 1/4	3	10	5	#5
12.0	19.5	#8	1 7/8	29	16	2 3/4	1 1/2	33	8 1/4	3.25	10.5	5.5	#5
	5.5	#5	3/4	26	16	1 1/2	3/4	17	5	2	5	5	#4
	7.5	#5	3/4	27	16	2	1	22	5 3/4	2.5	6	5	#4
	9.25	#5	1	27	16	2	1	22	6	2.5	7	5	#4
	11.25	#6	1 1/4	28	16	2 1/4	1 1/4	28	7	3	8	5	#4
	13.25	#7	1 1/2	28	16	2 1/4	1 1/4	28	7	3	9	5	#4
	15.25	#8	1 3/4	28	16	2 1/4	1 1/4	28	7 1/4	3	10	5	#5
16.0	16.25	#8	1 7/8	29	16	2 3/4	1 1/2	33	8 1/4	3.25	10	5.5	#5
	5.5	#5	3/4	27	16	2	1	22	5 3/4	2.5	5.5	5	#4
	7.5	#5	7/8	27	16	2	1	22	5 3/4	2.5	6.5	5	#4
	9.5	#6	1 1/8	28	16	2 1/4	1 1/4	28	6 3/4	3	7.5	5	#4
	11.5	#7	1 3/8	28	16	2 1/4	1 1/4	28	7	3	8.5	5	#4
	13.5	#8	1 5/8	28	16	2 1/4	1 1/4	28	7 1/4	3	10	5	#5
20.0	14.5	#8	1 3/4	29	16	2 3/4	1 1/2	33	8 1/4	3.25	10	5	#5

NOTES:

1. POST SIZES A, B, C, & D ARE SHOWN ON BD-677M (SHEET 4 OF 28).
2. FOR DETAIL 2, SEE BD-677M (SHEET 10 OF 28).
3. THESE CHARTS ARE DERIVED FROM BD-677M (SHEET 11 OF 28).
4. FOR ALL DETAILS NOT SHOWN, REFER TO BD-677M & BC-777M.

OCT. 15, 2008

MARK	DESCRIPTION	BY	CHK'D.	RECM'D.	DATE

REVISIONS

PENNDOT DRAWING #2000-335 PE

COMMONWEALTH OF PENNSYLVANIA
REGISTERED PROFESSIONAL
JOSEPH J. MIECZKOWSKI
ENGINEER
PE 043189-E

I hereby certify that all assumptions made in designing these sound barrier wall panels have been validated either through construction details or special notes and information to the fabricator, Erector and Contractor.

FADDIS CONCRETE PRODUCTS
3515 KING'S HIGHWAY, DOWNINGTOWN, PA 19335

AcoustaCrete®
PRECAST ABSORPTIVE
SOUND BARRIER PANEL
CONCRETE POSTS

BASE PLATE TO SPREAD FOOTING (1 OF 4)

Detail 2
Precast Concrete Post Type A and B
Metric Units

Precast Concrete Post With Base Plate
Connection to Spread Footing
Height Zone 0 - 4267
Wind Pressure = 0.96 kPa

CONCRETE POST			BASE PLATE				ANCHOR BOLTS			Spread Footing			
POST SPACING PS (mm)	WALL HEIGHT H (mm)	A1 (Bar Size)	t (mm)	ℓ (mm)	w (mm)	F (mm)	D (mm)	S (mm)	P (mm)	T (mm)	L (mm)	W (mm)	F1 (Bar Size)
	1676	#16	19	660	406	38	19.1	432	127	610	1524	1524	#13
	2286	#16	19	660	406	38	19.1	432	127	610	1524	1524	#13
	2896	#16	19	686	406	51	25.4	559	146	762	1524	1524	#13
	3505	#16	22	686	406	51	25.4	559	146	762	1829	1524	#13
	4115	#16	25	686	406	51	25.4	559	152	762	1981	1524	#13
	4724	#19	29	711	406	57	31.8	711	171	914	2134	1524	#13
	5334	#19	35	711	406	57	31.8	711	178	914	2438	1524	#13
	5944	#22	38	711	406	57	31.8	711	184	914	2591	1524	#13
	6553	#25	44	711	406	57	31.8	711	184	914	2896	1524	#16
3658	7163	#25	48	737	406	70	38.1	838	210	991	3048	1524	#16
	1676	#16	19	660	406	38	19.1	432	127	610	1524	1524	#13
	2286	#16	19	686	406	51	25.4	559	146	762	1524	1524	#13
	2819	#16	22	686	406	51	25.4	559	146	762	1676	1524	#13
	3429	#16	25	686	406	51	25.4	559	152	762	1981	1524	#13
	4039	#19	32	711	406	57	31.8	711	171	914	2134	1524	#13
	4648	#22	35	711	406	57	31.8	711	178	914	2438	1524	#13
	5258	#22	41	711	406	57	31.8	711	184	914	2743	1524	#16
4877	5867	#25	44	737	406	70	38.1	838	210	991	2896	1524	#16
	1600	#16	19	660	406	38	19.1	432	127	610	1524	1524	#13
	2210	#16	19	686	406	51	25.4	559	146	762	1524	1524	#13
	2819	#16	22	686	406	51	25.4	559	146	762	1829	1524	#13
	3429	#19	29	711	406	57	31.8	711	171	914	2134	1524	#13
	4039	#19	38	711	406	57	31.8	711	178	914	2438	1524	#13
	4648	#22	41	711	406	57	31.8	711	184	914	2591	1524	#16
6096	5258	#25	48	737	406	70	38.1	838	210	991	2896	1524	#16

Detail 2
Precast Concrete Post Type A and B
Metric Units

Precast Concrete Post With Base Plate
Connection to Spread Footing
Height Zones Over 4267
Wind Pressure = 1.34 kPa

CONCRETE POST			BASE PLATE				ANCHOR BOLTS			Spread Footing			
POST SPACING PS (mm)	WALL HEIGHT H (mm)	A1 (Bar Size)	t (mm)	ℓ (mm)	w (mm)	F (mm)	D (mm)	S (mm)	P (mm)	T (mm)	L (mm)	W (mm)	F1 (Bar Size)
	1676	#16	19	660	406	38	19.1	610	127	610	1524	1524	#13
	2286	#16	19	686	406	51	25.4	762	146	762	1676	1524	#13
	2896	#16	22	686	406	51	25.4	762	146	762	1981	1524	#13
	3505	#16	25	686	406	51	25.4	762	152	762	2286	1524	#13
	4115	#19	32	711	406	57	31.8	914	178	914	2438	1524	#13
	4724	#22	35	711	406	57	31.8	914	178	914	2743	1524	#13
	5334	#25	41	711	406	57	31.8	914	184	914	3048	1524	#16
3658	5944	#25	48	737	406	70	38.1	991	210	991	3200	1676	#16
	1676	#16	19	660	406	38	19.1	610	127	610	1524	1524	#13
	2286	#16	19	686	406	51	25.4	762	146	762	1829	1524	#13
	2819	#16	25	686	406	51	25.4	762	152	762	2134	1524	#13
	3429	#19	32	711	406	57	31.8	914	178	914	2438	1524	#13
	4039	#22	38	711	406	57	31.8	914	178	914	2743	1524	#13
	4648	#25	44	711	406	57	31.8	914	184	914	3048	1524	#16
4877	4953	#25	48	737	406	70	38.1	991	210	991	3048	1676	#16
	1676	#16	19	686	406	51	25.4	762	146	762	1676	1524	#13
	2286	#16	22	686	406	51	25.4	762	146	762	1981	1524	#13
	2896	#19	29	711	406	57	31.8	914	171	914	2286	1524	#13
	3505	#22	35	711	406	57	31.8	914	178	914	2591	1524	#13
	4115	#25	41	711	406	57	31.8	914	184	914	3048	1524	#16
6096	4420	#25	44	737	406	70	38.1	991	210	991	3048	1524	#16

NOTES:

1. POST SIZES A, B, C, & D ARE SHOWN ON BD-677M (SHEET 4 OF 28).
2. FOR DETAIL 2, SEE BD-677M (SHEET 10 OF 28).
3. THESE CHARTS ARE DERIVED FROM BD-677M (SHEET 12 OF 28).
4. FOR ALL DETAILS NOT SHOWN, REFER TO BD-677M & BC-777M.

MARK	DESCRIPTION	BY	CHK'D.	RECM'D.	DATE

REVISIONS

OCT. 15, 2008

PENNDOT DRAWING #2000-335 PE

COMMONWEALTH OF PENNSYLVANIA
REGISTERED PROFESSIONAL
JOSEPH J. MIECZKOWSKI
ENGINEER
PE-043185-E

I hereby certify that all assumptions made in designing these sound barrier wall panels have been validated either through construction details or special notes and information to the fabricator, Erector and Contractor.

FADDIS CONCRETE PRODUCTS
3515 KING'S HIGHWAY, DOWNINGTOWN, PA 19335

AcoustaCrete®
PRECAST ABSORPTIVE
SOUND BARRIER PANEL
CONCRETE POSTS

BASE PLATE TO SPREAD FOOTING (2 OF 4)

Detail 2
Precast Post Type C and D
U.S. Customary Units

Precast Concrete Post With Base Plate
Connection to Spread Footing
Height Zone 0' - 14'
Wind Pressure = 20 psf

CONCRETE POST			BASE PLATE				ANCHOR BOLTS			Spread Footing			
POST SPACING PS (FT.)	WALL HEIGHT H (FT.)	A1 (BAR SIZE)	t (IN.)	t' (IN.)	w (IN.)	F (IN.)	D (IN.)	S (IN.)	P (IN.)	T (FT.)	L (FT.)	W (FT.)	F1 (Bar Size)
	5.5	#5	3/4	29	19	1 1/2	3/4	17	5	2.0	5.5	5.5	#4
	7.5	#5	3/4	29	19	1 1/2	3/4	17	5	2.0	5.5	5.5	#4
	9.5	#5	3/4	30	19	2	1	22	5 3/4	2.5	5.5	5.5	#4
	11.5	#5	7/8	30	19	2	1	22	5 3/4	2.5	5.5	5.5	#4
	13.5	#6	1	30	19	2	1	22	6	2.5	6.5	5.5	#4
	15.5	#6	1 1/8	31	19	2 1/4	1 1/4	28	6 3/4	3.0	7.0	5.5	#4
	17.5	#6	1 1/8	31	19	2 1/4	1 1/4	28	6 3/4	3.0	7.5	5.5	#4
	19.5	#7	1 1/4	31	19	2 1/4	1 1/4	28	7	3.0	8.0	5.5	#4
	21.5	#7	1 3/8	31	19	2 1/4	1 1/4	28	7	3.0	9.0	5.5	#5
	23.5	#8	1 1/2	32	19	2 3/4	1 1/2	33	8	3.25	9.5	5.5	#5
	25.5	#8	1 5/8	32	19	2 3/4	1 1/2	33	8	3.25	10.0	5.5	#5
12.0	27.5	#9	1 7/8	32	19	2 3/4	1 1/2	33	8 1/4	3.25	10.5	5.5	#5
	5.5	#5	3/4	29	19	1 1/2	3/4	17	5	2.0	5.5	5.5	#4
	7.5	#5	3/4	30	19	2	1	22	5 3/4	2.5	5.5	5.5	#4
	9.5	#5	3/4	30	19	2	1	22	5 3/4	2.5	5.5	5.5	#4
	11.25	#6	7/8	30	19	2	1	22	5 3/4	2.5	6.0	5.5	#4
	13.25	#6	1	31	19	2 1/4	1 1/4	28	6 3/4	3.0	7.0	5.5	#4
	15.25	#6	1 1/8	31	19	2 1/4	1 1/4	28	6 3/4	3.0	7.5	5.5	#4
	17.25	#7	1 3/8	31	19	2 1/4	1 1/4	28	7	3.0	8.5	5.5	#4
	19.25	#7	1 1/2	31	19	2 1/4	1 1/4	28	7 1/4	3.0	9.0	5.5	#5
	21.25	#8	1 5/8	32	19	2 3/4	1 1/2	33	8	3.25	10.0	5.5	#5
	23.25	#9	1 7/8	32	19	2 3/4	1 1/2	33	8 1/4	3.25	10.5	5.5	#6
	25.25	#10	2	33	19	3	1 3/4	39	9 1/4	3.75	11.0	5.5	#6
16.0	27.25	#10	2 1/4	33	19	3	1 3/4	39	9 1/2	3.75	11.5	6.0	#6
	5.25	#5	3/4	29	19	1 1/2	3/4	17	5	2.0	5.5	5.5	#4
	7.25	#5	3/4	30	19	2	1	22	5 3/4	2.5	5.5	5.5	#4
	9.25	#5	7/8	30	19	2	1	22	5 3/4	2.5	6.0	5.5	#4
	11.25	#6	1	31	19	2 1/4	1 1/4	28	6 3/4	3.0	6.5	5.5	#4
	13.25	#6	1 1/8	31	19	2 1/4	1 1/4	28	6 3/4	3.0	7.5	5.5	#4
	15.25	#7	1 3/8	31	19	2 1/4	1 1/4	28	7	3.0	8.0	5.5	#4
	17.25	#8	1 1/2	31	19	2 1/4	1 1/4	28	7 1/4	3.0	9.0	5.5	#5
	19.25	#8	1 3/4	32	19	2 3/4	1 1/2	33	8 1/4	3.0	10.0	5.5	#5
	21.25	#9	1 7/8	32	19	2 3/4	1 1/2	33	8 1/4	3.25	10.5	5.5	#6
	23.25	#10	2 1/8	33	19	3	1 3/4	39	9 1/4	3.75	11.0	5.5	#6
	25.25	#11	2 3/8	33	19	3	1 3/4	39	9 1/2	3.75	11.5	6.0	#6
20.0	26.25	#11	2 1/2	34	19	3 1/2	2	44	10 1/2	4.25	12.0	6.0	#6

Detail 2
Precast Post Type C and D
U.S. Customary Units

Precast Concrete Post With Base Plate
Connection to Spread Footing
Height Zones Over 14'
Wind Pressure = 28 psf

CONCRETE POST			BASE PLATE				ANCHOR BOLTS			Spread Footing			
POST SPACING PS (FT.)	WALL HEIGHT H (FT.)	A1 (BAR SIZE)	t (IN.)	t' (IN.)	w (IN.)	F (IN.)	D (IN.)	S (IN.)	P (IN.)	T (FT.)	L (FT.)	W (FT.)	F1 (Bar Size)
	5.5	#5	3/4	29	19	1 1/2	3/4	17	5	2.0	5.5	5.5	#4
	7.5	#5	3/4	30	19	2	1	22	5 3/4	2.5	5.5	5.5	#4
	9.5	#5	3/4	30	19	2	1	22	5 3/4	2.5	6.0	5.5	#4
	11.5	#6	7/8	30	19	2	1	22	5 3/4	2.5	7.0	5.5	#4
	13.5	#6	1	31	19	2 1/4	1 1/4	28	6 3/4	3.0	7.5	5.5	#4
	15.5	#6	1 1/4	31	19	2 1/4	1 1/4	28	7	3.0	8.5	5.5	#4
	17.5	#7	1 3/8	31	19	2 1/4	1 1/4	28	7	3.0	9.5	5.5	#4
	19.5	#8	1 1/2	32	19	2 3/4	1 1/2	33	8	3.25	10.0	5.5	#5
	21.5	#8	1 3/4	32	19	2 3/4	1 1/2	33	8 1/4	3.25	11.0	5.5	#5
	23.5	#9	1 7/8	32	19	2 3/4	1 1/2	33	8 1/4	3.25	11.5	6.0	#5
	25.5	#10	2 1/8	33	19	3	1 3/4	39	9 1/4	3.75	12.0	6.0	#5
	27.5	#11	2 3/8	33	19	3	1 3/4	39	9 1/2	3.75	12.0	6.5	#5
12.0	29.5	#11	2 1/2	34	19	3 1/2	2	44	10 1/2	4.25	12.5	6.5	#5
	5.5	#5	3/4	29	19	1 1/2	3/4	17	5	2.0	5.5	5.5	#4
	7.5	#5	3/4	30	19	2	1	22	5 3/4	2.5	5.5	5.5	#4
	9.25	#5	7/8	30	19	2	1	22	5 3/4	2.5	6.5	5.5	#4
	11.25	#6	1	31	19	2 1/4	1 1/4	28	6 3/4	3.0	7.5	5.5	#4
	13.25	#6	1 1/4	31	19	2 1/4	1 1/4	28	7	3.0	8.5	5.5	#4
	15.25	#7	1 3/8	31	19	2 1/4	1 1/4	28	7	3.0	9.5	5.5	#5
	17.25	#8	1 5/8	32	19	2 3/4	1 1/2	33	8	3.25	10.5	5.5	#5
	19.25	#9	1 7/8	32	19	2 3/4	1 1/2	33	8 1/4	3.25	11.0	6.0	#5
	21.5	#10	2 1/8	33	19	3	1 3/4	39	9 1/4	3.75	11.5	6.0	#5
	23.5	#10	2 1/4	33	19	3	1 3/4	39	9 1/2	3.75	12.0	6.5	#5
16.0	25.5	#11	2 1/2	34	19	3 1/2	2	44	10 1/2	4.25	12.5	6.5	#6
	5.5	#5	3/4	30	19	2	1	22	5 3/4	2.5	5.5	5.5	#4
	7.5	#5	3/4	30	19	2	1	22	5 3/4	2.5	6.0	5.5	#4
	9.5	#6	1	31	19	2 1/4	1 1/4	28	6 3/4	3.0	7.0	5.5	#4
	11.5	#6	1 1/8	31	19	2 1/4	1 1/4	28	6 3/4	3.0	8.5	5.5	#4
	13.5	#7	1 3/8	31	19	2 1/4	1 1/4	28	7	3.0	9.5	5.5	#5
	15.5	#8	1 5/8	32	19	2 3/4	1 1/2	33	8	3.25	10.0	5.5	#5
	17.5	#9	1 7/8	32	19	2 3/4	1 1/2	33	8 1/4	3.25	11.0	5.5	#6
	19.5	#10	2 1/8	33	19	3	1 3/4	39	9 1/4	3.75	11.5	6.0	#6
	21.5	#11	2 3/8	33	19	3	1 3/4	39	9 1/2	3.75	12.5	6.5	#6
20.0	22.5	#11	2 1/2	34	19	3 1/2	2	44	10 1/2	4.25	12.5	6.5	#6

MARK	DESCRIPTION	BY	CHK'D.	RECM'D.	DATE

REVISIONS

OCT. 15, 2008

PENNDOT DRAWING #2000-335 PE

FADDIS CONCRETE PRODUCTS
3515 KING'S HIGHWAY, DOWNINGTOWN, PA 19335

COMMONWEALTH OF PENNSYLVANIA
REGISTERED PROFESSIONAL
JOSEPH J. MIECZKOWSKI
ENGINEER
PE-043189-E

I hereby certify that all assumptions made in designing these sound barrier wall panels have been validated either through construction details or special notes and information to the fabricator, Erector and Contractor.

AcoustaCrete®
PRECAST ABSORPTIVE SOUND BARRIER PANEL CONCRETE POSTS

BASE PLATE TO SPREAD FOOTING (3 OF 4)

SHEET 12 OF 28

NOTES:

1. POST SIZES A, B, C, & D ARE SHOWN ON BD-677M (SHEET 4 OF 28).
2. FOR DETAIL 2, SEE BD-677M (SHEET 10 OF 28).
3. THESE CHARTS ARE DERIVED FROM BD-677M (SHEETS 13 OF 28).
4. FOR ALL DETAILS NOT SHOWN, REFER TO BD-677M & BC-777M.

Detail 2
Precast Post Type C and D
Metric Units

Precast Concrete Post With Base Plate
Connection to Spread Footing
Height Zone 0 - 4267
Wind Pressure = 0.96 kPa

CONCRETE POST			BASE PLATE				ANCHOR BOLTS			Spread Footing			
POST SPACING PS (mm)	WALL HEIGHT H (mm)	A1 (Bar Size)	t (mm)	r (mm)	w (mm)	F (mm)	D (mm)	S (mm)	P (mm)	T (mm)	L (mm)	W (mm)	F1 (Bar Size)
	1676	#16	19	737	483	38	19.1	432	127	610	1676	1676	#13
	2286	#16	19	737	483	38	19.1	432	127	610	1676	1676	#13
	2896	#16	19	762	483	51	25.4	559	146	762	1676	1676	#13
	3505	#16	22	762	483	51	25.4	559	146	762	1676	1676	#13
	4115	#19	25	762	483	51	25.4	559	152	762	1981	1676	#13
	4724	#19	29	787	483	57	31.8	711	171	914	2134	1676	#13
	5334	#19	29	787	483	57	31.8	711	171	914	2286	1676	#13
	5944	#22	32	787	483	57	31.8	711	178	914	2438	1676	#13
	6553	#22	35	787	483	57	31.8	711	178	914	2743	1676	#16
	7163	#25	38	813	483	70	38.1	838	203	991	2896	1676	#16
	7772	#25	41	813	483	70	38.1	838	203	991	3048	1676	#16
3658	8382	#29	48	813	483	70	38.1	838	210	991	3200	1676	#16
	1676	#16	19	737	483	38	19.1	432	127	610	1676	1676	#13
	2286	#16	19	762	483	51	25.4	559	146	762	1676	1676	#13
	2896	#16	19	762	483	51	25.4	559	146	762	1676	1676	#13
	3429	#19	22	762	483	51	25.4	559	146	762	1829	1676	#13
	4039	#19	25	787	483	57	31.8	711	171	914	2134	1676	#13
	4648	#19	29	787	483	57	31.8	711	171	914	2286	1676	#13
	5258	#22	35	787	483	57	31.8	711	178	914	2591	1676	#13
	5867	#22	38	787	483	57	31.8	711	184	914	2743	1676	#16
	6477	#25	41	813	483	70	38.1	838	203	991	3048	1676	#16
	7087	#29	48	813	483	70	38.1	838	210	991	3200	1676	#19
	7696	#32	51	838	483	76	44.5	991	235	1143	3353	1676	#19
4877	8306	#32	57	838	483	76	44.5	991	241	1143	3505	1829	#19
	1600	#16	19	737	483	38	19.1	432	127	610	1676	1676	#13
	2210	#16	19	762	483	51	25.4	559	146	762	1676	1676	#13
	2819	#16	22	762	483	51	25.4	559	146	762	1829	1676	#13
	3429	#19	25	787	483	57	31.8	711	171	914	1981	1676	#13
	4039	#19	29	787	483	57	31.8	711	171	914	2286	1676	#13
	4648	#22	35	787	483	57	31.8	711	178	914	2438	1676	#13
	5258	#25	38	787	483	57	31.8	711	184	914	2743	1676	#16
	5867	#25	44	813	483	70	38.1	838	210	991	3048	1676	#16
	6477	#29	48	813	483	70	38.1	838	210	991	3200	1676	#19
	7087	#32	54	838	483	76	44.5	991	235	1143	3353	1676	#19
	7696	#36	60	838	483	76	44.5	991	241	1143	3505	1829	#19
6096	8001	#36	64	864	438	89	50.8	1118	267	1295	3658	1829	#19

Detail 2
Precast Post Type C and D
Metric Units

Precast Concrete Post With Base Plate
Connection to Spread Footing
Height Zones Over 4267
Wind Pressure = 1.34 kPa

CONCRETE POST			BASE PLATE				ANCHOR BOLTS			Spread Footing			
POST SPACING PS (mm)	WALL HEIGHT H (mm)	A1 (Bar Size)	t (mm)	r (mm)	w (mm)	F (mm)	D (mm)	S (mm)	P (mm)	T (mm)	L (mm)	W (mm)	F1 (Bar Size)
	1676	#16	19	737	483	38	19.1	432	127	610	1676	1676	#13
	2286	#16	19	762	483	51	25.4	559	146	762	1676	1676	#13
	2896	#16	19	762	483	51	25.4	559	146	762	1829	1676	#13
	3505	#19	22	762	483	51	25.4	559	146	762	2134	1676	#13
	4115	#19	25	787	483	57	31.8	711	171	914	2286	1676	#13
	4724	#19	32	787	483	57	31.8	711	178	914	2591	1676	#13
	5334	#22	35	787	483	57	31.8	711	178	914	2896	1676	#13
	5944	#25	38	813	483	70	38.1	838	203	991	3048	1676	#16
	6553	#25	44	813	483	70	38.1	838	210	991	3353	1676	#16
	7163	#29	48	813	483	70	38.1	838	210	991	3505	1829	#16
	7772	#32	54	838	483	76	44.5	991	235	1143	3658	1829	#16
	8382	#36	60	838	483	76	44.5	991	241	1143	3658	1981	#16
3658	8992	#36	64	864	483	89	50.8	1118	267	1295	3810	1981	#16
	1676	#16	19	737	483	38	19.1	432	127	610	1676	1676	#13
	2286	#16	19	762	483	51	25.4	559	146	762	1676	1676	#13
	2819	#16	22	762	483	51	25.4	559	146	762	1981	1676	#13
	3429	#19	25	787	483	57	31.8	711	171	914	2286	1676	#13
	4039	#19	32	787	483	57	31.8	711	178	914	2591	1676	#13
	4648	#22	35	787	483	57	31.8	711	178	914	2896	1676	#16
	5258	#25	41	813	483	70	38.1	838	203	991	3200	1676	#16
	5867	#29	48	813	483	70	38.1	838	210	991	3353	1829	#16
	6553	#32	54	838	483	76	44.5	991	235	1143	3505	1829	#16
	7163	#32	57	838	483	76	44.5	991	2441	1143	3658	1981	#16
4877	7772	#36	64	864	483	89	50.8	1118	267	1295	3810	1981	#19
	1676	#16	19	762	483	51	25.4	559	146	762	1676	1676	#13
	2286	#16	19	762	483	51	25.4	559	146	762	1829	1676	#13
	2896	#19	25	787	483	57	31.8	711	171	914	2134	1676	#13
	3505	#19	29	787	483	57	31.8	711	171	914	2591	1676	#13
	4115	#22	35	787	483	57	31.8	711	178	914	2896	1676	#16
	4724	#25	41	813	483	70	38.1	838	203	991	3048	1676	#16
	5334	#29	48	813	483	70	38.1	838	210	991	3353	1676	#19
	5944	#32	54	838	483	76	44.5	991	235	1143	3505	1829	#19
	6553	#36	60	838	483	76	44.5	991	241	1143	3810	1981	#19
6096	6858	#36	64	864	483	89	50.8	1118	267	1295	3810	1981	#19

NOTES:

1. POST SIZES A, B, C, & D ARE SHOWN ON BD-677M (SHEET 4 OF 28).
2. FOR DETAIL 2, SEE BD-677M (SHEET 10 OF 28).
3. THESE CHARTS ARE DERIVED FROM BD-677M (SHEETS 14 OF 28).
4. FOR ALL DETAILS NOT SHOWN, REFER TO BD-677M & BC-777M.

MARK	DESCRIPTION	BY	CHK'D.	RECM'D.	DATE

REVISIONS

OCT. 15, 2008

PENNDOT DRAWING #2000-335 PE

COMMONWEALTH OF PENNSYLVANIA REGISTERED PROFESSIONAL JOSEPH J. MIECZKOWSKI ENGINEER PE-043189-E

I hereby certify that all assumptions made in designing these sound barrier wall panels have been validated either through construction details or special notes and information to the fabricator, Erector and Contractor.

FADDIS CONCRETE PRODUCTS
3515 KING'S HIGHWAY, DOWNINGTOWN, PA 19335

AcoustaCrete®
PRECAST ABSORPTIVE
SOUND BARRIER PANEL
CONCRETE POSTS

BASE PLATE TO SPREAD FOOTING (4 OF 4)

SHEET 13 OF 28

Detail 3
Precast Concrete Post
Type A and B
U.S. Customary Units

Precast Concrete Post
Embedded in Caisson
Height Zone 0' - 14'
Wind Pressure = 20 psf

Concrete Post Reinforcement

Post Spacing P8 (FT)	Wall Height H (FT)	A2 (Bar Size)	S (IN.) Uncoated or Galvanized Bars	S (IN.) Epoxy Coated Bars
	5.5	#4	12	18
	7.5	#4	12	18
	9.5	#4	12	18
	11.5	#4	12	18
	13.5	#4	12	18
	15.5	#5	15	23
	17.5	#6	20	29
	19.5	#6	20	29
	21.5	#7	26	39
	23.5	#7	26	39
	25.5	#8	35	52
12.0	27.5	#9	44	65
	5.5	#4	12	18
	7.5	#4	12	18
	9.25	#4	12	18
	11.25	#4	12	18
	13.25	#5	15	23
	15.25	#6	20	29
	17.25	#7	26	39
	19.25	#7	26	39
	21.25	#8	35	52
	23.25	#9	44	65
16.0	24.25	#9	44	65
	5.25	#4	12	18
	7.25	#4	12	18
	9.25	#4	12	18
	11.25	#5	15	23
	13.25	#6	20	29
	15.25	#6	20	29
	17.25	#7	26	39
	19.25	#8	35	52
	21.25	#9	44	65
20.0	23.25	#10	55	83

Detail 3
Precast Concrete Post
Type A and B
U.S. Customary Units

Precast Concrete Post
Embedded in Caisson
Height Zone Over 14'
Wind Pressure = 28 psf

Concrete Post Reinforcement

Post Spacing P8 (FT)	Wall Height H (FT)	A2 (Bar Size)	S (IN.) Uncoated or Galvanized Bars	S (IN.) Epoxy Coated Bars
	5.5	#4	12	18
	7.5	#4	12	18
	9.5	#4	12	18
	11.5	#4	12	18
	13.5	#5	15	23
	15.5	#6	20	29
	17.5	#7	26	39
	19.5	#7	26	39
	21.5	#8	35	52
	23.5	#9	44	65
12.0	25.5	#10	55	83
	5.5	#4	12	18
	7.5	#4	12	18
	9.25	#4	12	18
	11.25	#5	15	23
	13.25	#6	20	29
	15.25	#7	26	39
	17.5	#8	35	52
	19.5	#8	35	52
	21.5	#9	44	65
16.0	23.5	#10	55	83
	5.5	#4	12	18
	7.5	#4	12	18
	9.5	#5	15	23
	11.5	#6	20	29
	13.5	#7	26	39
	15.5	#8	35	52
	17.5	#9	44	65
20.0	19.5	#10	55	83

Detail 3
Precast Concrete Post
Type C and D
U.S. Customary Units

Precast Concrete Post
Embedded in Caisson
Height Zone 0' - 14'
Wind Pressure = 20 psf

Concrete Post Reinforcement

Post Spacing P8 (FT)	Wall Height H (FT)	A2 (Bar Size)	S (IN.) Uncoated or Galvanized Bars	S (IN.) Epoxy Coated Bars
	5.5	#4	12	18
	7.5	#4	12	18
	9.5	#4	12	18
	11.5	#4	12	18
	13.5	#5	15	23
	15.5	#6	15	23
	17.5	#6	15	23
	19.5	#6	20	29
	21.5	#6	20	29
	23.5	#7	26	39
	25.5	#7	26	39
12.0	27.5	#8	35	52
	5.5	#4	12	18
	7.5	#4	12	18
	9.5	#4	12	18
	11.25	#5	15	23
	13.25	#5	15	23
	15.25	#5	15	23
	17.25	#6	20	29
	19.25	#7	26	39
	21.25	#7	26	39
	23.25	#8	35	52
	25.25	#9	44	65
16.0	27.25	#9	44	65
	5.25	#4	12	18
	7.25	#4	12	18
	9.25	#4	12	18
	11.25	#5	15	23
	13.25	#5	15	23
	15.25	#6	20	29
	17.25	#7	26	39
	19.25	#7	26	39
	21.25	#8	35	52
	23.25	#9	44	65
	25.25	#10	55	83
20.0	27.25	#10	55	83

Detail 3
Precast Concrete Post
Type C and D
U.S. Customary Units

Precast Concrete Post
Embedded in Caisson
Height Zone Over 14'
Wind Pressure = 28 psf

Concrete Post Reinforcement

Post Spacing P8 (FT)	Wall Height H (FT)	A2 (Bar Size)	S (IN.) Uncoated or Galvanized Bars	S (IN.) Epoxy Coated Bars
	5.5	#4	12	18
	7.5	#4	12	18
	9.5	#4	12	18
	11.5	#5	15	23
	13.5	#6	15	23
	15.5	#6	15	23
	17.5	#6	20	29
	19.5	#7	26	39
	21.5	#7	26	39
	23.5	#8	35	52
	25.5	#9	44	65
12	29.5	#10	55	83
	5.5	#4	12	18
	7.5	#4	12	18
	9.25	#5	15	23
	11.25	#5	15	23
	13.25	#5	15	23
	15.25	#6	20	29
	17.25	#7	26	39
	19.25	#8	35	52
	21.5	#9	44	65
	23.5	#9	44	65
	25.5	#10	55	83
16	27.5	#11	68	102
	5.5	#4	12	18
	7.5	#4	12	18
	9.5	#5	15	23
	11.5	#5	15	23
	13.5	#6	20	29
	15.5	#7	26	39
	17.5	#8	35	52
	19.5	#9	44	65
	21.5	#10	55	83
	23.5	#10	55	83
20	24.5	#11	68	102

MARK	DESCRIPTION	BY	CHK'D.	RECM'D.	DATE

REVISIONS

OCT. 15, 2008

PENNDOT DRAWING #2000-335 PE

COMMONWEALTH OF PENNSYLVANIA
REGISTERED PROFESSIONAL
JOSEPH J. MIECZKOWSKI
ENGINEER
PE-043189-E

I hereby certify that all assumptions made in designing these sound barrier wall panels have been validated either through construction details or special notes and information to the fabricator, Erector and Contractor.

FADDIS CONCRETE PRODUCTS
3515 KING'S HIGHWAY, DOWNINGTOWN, PA 19335

AcoustaCrete®
PRECAST ABSORPTIVE
SOUND BARRIER PANEL
CONCRETE POSTS

EMBEDDED IN CAISSON (1 OF 2)

SHEET 14 OF 28

NOTES:

1. POST SIZES A, B, C, & D ARE SHOWN ON BD-677M (SHEET 4 OF 28).
2. FOR DETAIL 3, SEE BD-677M (SHEET 15 OF 28).
3. THESE CHARTS ARE DERIVED FROM BD-677M (SHEETS 16 & 17 OF 28).
4. FOR ALL DETAILS NOT SHOWN, REFER TO BD-677M & BC-777M.

Detail 3
Precast Concrete Post
Type A and B
Metric Units

Precast Concrete Post
Embedded in Caisson
Height Zone 0 - 4267
Wind Pressure = 0.96 kPa

Concrete Post Reinforcement

Post Spacing PS (mm)	Wall Height H (mm)	A2 (Bar Size)	S (mm) Uncoated or Galvanized Bars	S (mm) Epoxy Coated Bars
	1676	#13	305	457
	2286	#13	305	457
	2896	#13	305	457
	3505	#13	305	457
	4115	#13	305	457
	4724	#16	381	584
	5334	#19	508	737
	5944	#19	508	737
	6553	#22	660	991
	7163	#22	660	991
	7772	#25	889	1321
3658	8382	#29	1118	1651
	1676	#13	305	457
	2286	#13	305	457
	2819	#13	305	457
	3429	#13	305	457
	4039	#16	381	584
	4648	#19	508	737
	5258	#22	660	991
	5867	#22	660	991
	6477	#25	889	1321
	7087	#29	1118	1651
4877	7561	#29	1118	1651
	1676	#13	305	457
	2210	#13	305	457
	2819	#13	305	457
	3429	#16	381	584
	4039	#19	508	737
	4648	#19	508	737
	5258	#22	660	991
	5867	#25	889	1321
	6477	#29	1118	1651
6096	7087	#32	1397	2108

Detail 3
Precast Concrete Post
Type A and B
Metric Units

Precast Concrete Post
Embedded in Caisson
Height Zone Over 4267
Wind Pressure = 1.34 kPa

Concrete Post Reinforcement

Post Spacing PS (mm)	Wall Height H (mm)	A2 (Bar Size)	S (mm) Uncoated or Galvanized Bars	S (mm) Epoxy Coated Bars
	1676	#13	305	457
	2286	#13	305	457
	2896	#13	305	457
	3505	#13	305	457
	4115	#16	381	584
	4724	#19	508	737
	5334	#22	660	991
	5944	#22	660	991
	6553	#25	889	1321
	7163	#29	1118	1651
3658	7468	#32	1397	2108
	1676	#13	305	457
	2286	#13	305	457
	2819	#13	305	457
	3429	#16	381	584
	4039	#19	508	737
	4648	#22	660	991
	5334	#25	889	1321
	5944	#25	889	1321
	6553	#29	1118	1651
4877	6858	#32	1397	2108
	1676	#13	305	457
	2286	#13	305	457
	2896	#16	381	584
	3505	#19	508	737
	4115	#22	660	991
	4724	#25	889	1321
	5334	#29	1118	1651
6096	5944	#32	1397	2108

Detail 3
Precast Concrete Post
Type C and D
Metric Units

Precast Concrete Post
Embedded in Caisson
Height Zone 0 - 4267
Wind Pressure = 0.96 kPa

Concrete Post Reinforcement

Post Spacing PS (mm)	Wall Height H (mm)	A2 (Bar Size)	S (mm) Uncoated or Galvanized Bars	S (mm) Epoxy Coated Bars
	1676	#13	305	457
	2286	#13	305	457
	2896	#13	305	457
	3505	#13	305	457
	4115	#16	381	584
	4724	#19	508	737
	5334	#19	508	737
	5944	#19	508	737
	6553	#19	508	737
	7163	#22	660	991
	7772	#22	660	991
3658	8382	#25	889	1321
	1676	#13	305	457
	2286	#13	305	457
	2896	#13	305	457
	3429	#16	381	584
	4039	#16	381	584
	4648	#16	381	584
	5258	#19	508	737
	5867	#22	660	991
	6477	#22	660	991
	7087	#25	889	1321
	7696	#29	1118	1651
4877	8306	#29	1118	1651
	1676	#13	305	457
	2210	#13	305	457
	2819	#13	305	457
	3429	#16	381	584
	4039	#16	381	584
	4648	#16	381	584
	5258	#22	660	991
	5867	#22	660	991
	6477	#25	889	1321
	7087	#29	1118	1651
	7696	#32	1397	2108
6096	8306	#32	1397	2108

Detail 3
Precast Concrete Post
Type C and D
Metric Units

Precast Concrete Post
Embedded in Caisson
Height Zone Over 4267
Wind Pressure = 1.34 kPa

Concrete Post Reinforcement

Post Spacing PS (mm)	Wall Height H (mm)	A2 (Bar Size)	S (mm) Uncoated or Galvanized Bars	S (mm) Epoxy Coated Bars
	1676	#13	305	457
	2286	#13	305	457
	2896	#13	305	457
	3505	#16	381	584
	4115	#16	381	584
	4724	#19	508	737
	5334	#19	508	737
	5944	#22	660	991
	6553	#22	660	991
	7163	#25	889	1321
	7772	#29	1118	1651
	8382	#29	1118	1651
3658	8992	#32	1397	2108
	1676	#13	305	457
	2286	#13	305	457
	2896	#13	305	457
	3429	#16	381	584
	4039	#16	381	584
	4648	#16	381	584
	5258	#19	508	737
	5867	#22	660	991
	6477	#22	660	991
	7087	#25	889	1321
	7696	#29	1118	1651
4877	8306	#29	1118	1651
	1676	#13	305	457
	2210	#13	305	457
	2819	#13	305	457
	3429	#16	381	584
	4039	#16	381	584
	4648	#16	381	584
	5258	#22	660	991
	5867	#22	660	991
	6477	#25	889	1321
	7087	#29	1118	1651
	7696	#32	1397	2108
6096	8306	#32	1397	2108

Detail 3
Precast Concrete Post
Type C and D
Metric Units

Precast Concrete Post
Embedded in Caisson
Height Zone Over 4267
Wind Pressure = 1.34 kPa

Concrete Post Reinforcement

Post Spacing PS (mm)	Wall Height H (mm)	A2 (Bar Size)	S (mm) Uncoated or Galvanized Bars	S (mm) Epoxy Coated Bars
	1676	#13	305	457
	2286	#13	305	457
	2896	#13	305	457
	3505	#16	381	584
	4115	#16	381	584
	4724	#19	508	737
	5334	#19	508	737
	5944	#22	660	991
	6553	#22	660	991
	7163	#25	889	1321
	7772	#29	1118	1651
	8382	#29	1118	1651
3658	8992	#32	1397	2108
	1676	#13	305	457
	2286	#13	305	457
	2896	#13	305	457
	3429	#16	381	584
	4039	#16	381	584
	4648	#16	381	584
	5258	#22	660	991
	5867	#22	660	991
	6477	#25	889	1321
	7087	#29	1118	1651
	7696	#32	1397	2108
4877	8306	#32	1397	2108
	1676	#13	305	457
	2286	#13	305	457
	2896	#16	381	584
	3505	#16	381	584
	4115	#16	381	584
	4724	#22	660	991
	5334	#25	889	1321
	5944	#29	1118	1651
	6553	#32	1397	2108
	7163	#32	1397	2108
6096	7468	#36	1727	2501

MARK	DESCRIPTION	BY	CHK'D.	RECM'D.	DATE

REVISIONS

OCT. 15, 2008

PENNDOT DRAWING #2000-335 PE

NOTES:

1. POST SIZES A, B, C, & D ARE SHOWN ON BD-677M (SHEET 4 OF 28).
2. FOR DETAIL 3, SEE BD-677M (SHEET 15 OF 28).
3. THESE CHARTS ARE DERIVED FROM BD-677M (SHEETS 16 & 17 OF 28).
4. FOR ALL DETAILS NOT SHOWN, REFER TO BD-677M & BC-777M.

COMMONWEALTH OF PENNSYLVANIA
REGISTERED PROFESSIONAL
JOSEPH J. MIECZKOWSKI
ENGINEER
PE-043189-E

I hereby certify that all assumptions made in designing these sound barrier wall panels have been validated either through construction details or special notes and information to the fabricator, Erector and Contractor.

FADDIS CONCRETE PRODUCTS
3515 KING'S HIGHWAY, DOWNINGTOWN, PA 19335

AcoustaCrete®
PRECAST ABSORPTIVE
SOUND BARRIER PANEL
CONCRETE POSTS

EMBEDDED IN CAISSON (2 OF 2)

Detail 4
Precast Concrete Post Type A and B
U.S. Customary Units

Precast Concrete Post
Embedded in Spread Footing
Height Zone 0' - 14'
Wind Pressure = 20 psf

Concrete Post Reinforcement						Spread Footing			
Post Spacing PS (FT.)	Wall Height H (FT.)	A2 (Bar Size)	HE (IN.) (MIN.) Uncoated	HE (IN.) (MIN.) Epoxy	HL (IN.)	T (FT.)	L (FT.)	W (FT.)	F1 (Bar Size)
	5.5	#4	8	10	8	2.0	5.0	5.0	#4
	7.5	#4	8	10	8	2.0	5.0	5.0	#4
	9.5	#4	8	10	8	2.5	5.0	5.0	#4
	11.5	#4	8	10	8	2.5	6.0	5.0	#4
	13.5	#4	8	10	8	2.5	6.5	5.0	#4
	15.5	#5	10	12	10	3.0	7.0	5.0	#4
	17.5	#6	12	14	12	3.0	8.0	5.0	#4
	19.5	#6	12	14	12	3.0	8.5	5.0	#4
	21.5	#7	14	17	14	3.0	9.5	5.0	#5
	23.5	#7	14	17	14	3.25	10.0	5.0	#5
	25.5	#8	16	19	16	3.25	10.5	5.5	#5
12.0	27.5	#9	18	21	19	3.75	10.5	5.5	#5
	5.5	#4	8	10	8	2.0	5.0	5.0	#4
	7.5	#4	8	10	8	2.5	5.0	5.0	#4
	9.25	#4	8	10	8	2.5	5.5	5.0	#4
	11.25	#4	8	10	8	2.5	6.5	5.0	#4
	13.25	#5	10	12	10	3.0	7.0	5.0	#4
	15.25	#6	12	14	12	3.0	8.0	5.0	#4
	17.25	#7	14	17	14	3.0	9.0	5.0	#5
	19.25	#7	14	17	14	3.25	9.5	5.0	#5
	21.25	#8	16	19	16	3.25	10.0	5.5	#5
	23.25	#9	18	21	19	3.75	10.5	5.5	#5
16.0	24.25	#9	18	21	19	3.75	11.0	5.5	#5
	5.25	#4	8	10	8	2.0	5.0	5.0	#4
	7.25	#4	8	10	8	2.5	5.0	5.0	#4
	9.25	#4	8	10	8	2.5	6.0	5.0	#4
	11.25	#5	10	12	10	3.0	7.0	5.0	#4
	13.25	#6	12	14	12	3.0	8.0	5.0	#4
	15.25	#6	12	14	12	3.0	8.5	5.0	#5
	17.25	#7	14	17	14	3.25	9.5	5.0	#5
	19.25	#8	16	19	16	3.25	10.0	5.0	#6
	21.25	#9	18	21	19	3.75	10.5	5.5	#6
20.0	23.25	#10	20	24	22	3.75	11.0	6.0	#6

Detail 4
Precast Concrete Post Type A and B
U.S. Customary Units

Precast Concrete Post
Embedded in Spread Footing
Height Zone Over 14'
Wind Pressure = 28 psf

Concrete Post Reinforcement						Spread Footing			
Post Spacing PS (FT.)	Wall Height H (FT.)	A2 (Bar Size)	HE (IN.) (MIN.) Uncoated	HE (IN.) (MIN.) Epoxy	HL (IN.)	T (FT.)	L (FT.)	W (FT.)	F1 (Bar Size)
	5.5	#4	8	10	8	2.0	5.0	5.0	#4
	7.5	#4	8	10	8	2.5	5.5	5.0	#4
	9.5	#4	8	10	8	2.5	6.5	5.0	#4
	11.5	#4	8	10	8	2.5	7.5	5.0	#4
	13.5	#5	10	12	10	3.0	8.0	5.0	#4
	15.5	#6	12	14	12	3.0	9.0	5.0	#4
	17.5	#7	14	17	14	3.0	10.0	5.0	#5
	19.5	#7	14	17	14	3.25	10.5	5.5	#5
	21.5	#8	16	19	16	3.25	11.0	5.5	#5
	23.5	#9	18	21	19	3.75	11.5	6.0	#5
12.0	24.5	#10	20	24	22	3.75	11.5	6.0	#5
	5.5	#4	8	10	8	2.0	5.0	5.0	#4
	7.5	#4	8	10	8	2.5	6.0	5.0	#4
	9.25	#4	8	10	8	2.5	7.0	5.0	#4
	11.25	#5	10	12	10	3.0	8.0	5.0	#4
	13.25	#6	12	14	12	3.0	9.0	5.0	#4
	15.25	#7	14	17	14	3.0	10.0	5.0	#5
	17.5	#8	16	19	16	3.25	11.0	5.5	#5
	19.5	#8	16	19	16	3.25	11.0	6.0	#5
	21.5	#9	18	21	19	3.75	12.0	6.0	#5
16.0	22.5	#10	20	24	22	3.75	12.0	6.0	#6
	5.5	#4	8	10	8	2.5	5.5	5.0	#4
	7.5	#4	8	10	8	2.5	6.5	5.0	#4
	9.5	#5	10	12	10	3.0	7.5	5.0	#4
	11.5	#6	12	14	12	3.0	8.5	5.0	#4
	13.5	#7	14	17	14	3.0	10.0	5.0	#5
	15.5	#8	16	19	16	3.25	10.5	5.5	#5
	17.5	#9	18	21	19	3.25	11.0	6.0	#5
20.0	19.5	#10	20	24	22	3.75	12.0	6.0	#6

NOTES:

1. POST SIZES A, B, C, & D ARE SHOWN ON BD-677M (SHEET 4 OF 28).
2. FOR DETAIL 4, SEE BD-677M (SHEET 18 OF 28).
3. THESE CHARTS ARE DERIVED FROM BD-677M (SHEETS 19 OF 28).
4. FOR ALL DETAILS NOT SHOWN, REFER TO BD-677M & BC-777M.

MARK	DESCRIPTION	BY	CHK'D.	RECM'D.	DATE

REVISIONS

OCT. 15, 2008

PENNDOT DRAWING #2000-335 PE

COMMONWEALTH OF PENNSYLVANIA
REGISTERED PROFESSIONAL
JOSEPH J. MIECZKOWSKI
ENGINEER
PE-043189-E

I hereby certify that all assumptions made in designing these sound barrier wall panels have been validated either through construction details or special notes and information to the fabricator, Erector and Contractor.

FADDIS CONCRETE PRODUCTS
3515 KING'S HIGHWAY, DOWNINGTOWN, PA 19335

AcoustaCrete®
PRECAST ABSORPTIVE
SOUND BARRIER PANEL
CONCRETE POSTS

EMBEDDED IN SPREAD FOOTING (1 OF 4)

SHEET 16 OF 28

Detail 4
Precast Concrete Post Type A and B
Metric Units

Precast Concrete Post
Embedded in Spread Footing
Height Zone 0 - 4267
Wind Pressure = 1.34 kPa

Concrete Post Reinforcement						Spread Footing			
Post Spacing PS (mm)	Wall Height H (mm)	A2 (Bar Size)	HE (mm) (MIN.) Uncoated	HE (mm) (MIN.) Epoxy	HL (mm)	T (mm)	L (mm)	W (mm)	F1 (Bar Size)
	1676	#13	203	254	203	610	1524	1524	#13
	2286	#13	203	254	203	610	1524	1524	#13
	2896	#13	203	254	203	762	1524	1524	#13
	3505	#13	203	254	203	762	1829	1524	#13
	4115	#13	203	254	203	762	1981	1524	#13
	4724	#16	254	305	254	914	2134	1524	#13
	5334	#19	305	356	305	914	2438	1524	#13
	5944	#19	305	356	305	914	2591	1524	#13
	6553	#22	356	432	356	914	2896	1524	#16
	7163	#22	356	432	356	991	3048	1524	#16
	7772	#25	406	483	406	991	3200	1676	#16
3658	8382	#29	457	533	483	1143	3200	1676	#16
	1676	#13	203	254	20	610	1524	1524	#13
	2286	#13	203	254	203	762	1524	1524	#13
	2819	#13	203	254	203	762	1676	1524	#13
	3429	#13	203	254	203	762	1981	1524	#13
	4039	#16	254	305	254	914	2134	1524	#13
	4648	#19	305	356	305	914	2438	1524	#13
	5258	#22	356	432	356	914	2743	1524	#16
	5867	#22	356	432	356	991	2896	1524	#16
	6477	#25	406	483	406	991	3048	1676	#16
	7087	#29	457	533	483	1143	3200	1676	#16
4877	7391	#29	457	533	483	1143	3353	1676	#16
	1600	#13	203	254	203	610	1524	1524	#13
	2210	#13	203	254	203	762	1524	1524	#13
	2819	#13	203	254	203	762	1829	1524	#13
	3429	#16	254	305	254	914	2134	1524	#13
	4039	#19	305	356	305	914	2438	1524	#13
	4648	#19	305	356	305	914	2591	1524	#16
	5258	#22	356	432	356	991	2896	1524	#16
	5867	#25	406	483	406	991	3048	1524	#19
	6477	#29	457	533	483	1143	3200	1676	#19
6096	7087	#32	508	610	559	1143	3353	1829	#19

Detail 4
Precast Concrete Post Type A and B
Metric Units

Precast Concrete Post
Embedded in Spread Footing
Height Zone Over 4267
Wind Pressure = 1.34 kPa

Concrete Post Reinforcement						Spread Footing			
Post Spacing PS (mm)	Wall Height H (mm)	A2 (Bar Size)	HE (mm) (MIN.) Uncoated	HE (mm) (MIN.) Epoxy	HL (mm)	T (mm)	L (mm)	W (mm)	F1 (Bar Size)
	1676	#13	203	254	203	610	1525	1524	#13
	2286	#13	203	254	203	762	1676	1524	#13
	2896	#13	203	254	203	762	1981	1524	#13
	3505	#13	203	254	203	762	2286	1524	#13
	4115	#16	254	305	254	914	2438	1524	#13
	4724	#19	305	356	305	914	2743	1524	#13
	5334	#22	356	432	356	914	3048	1524	#16
	5944	#22	356	432	356	991	3200	1676	#16
	6553	#25	406	483	406	991	3353	1676	#16
	7163	#29	457	533	483	1143	3505	1829	#16
3658	7468	#32	508	610	559	1143	3505	1829	#16
	1676	#13	203	254	203	610	1524	1524	#13
	2286	#13	203	254	203	762	1829	1524	#13
	2819	#13	203	254	203	762	2134	1524	#13
	3429	#16	254	305	254	914	2438	1524	#13
	4039	#19	305	356	305	914	2743	1524	#13
	4648	#22	356	432	356	914	3048	1524	#16
	5334	#25	406	483	406	991	3353	1676	#16
	5944	#25	406	483	406	991	3353	1829	#16
	6553	#29	457	533	483	1143	3658	1829	#16
4877	6858	#32	508	610	559	1143	3658	1829	#19
	1676	#13	203	254	203	762	1676	1524	#13
	2286	#13	203	254	203	762	1981	1524	#13
	2896	#16	254	305	254	914	2286	1524	#13
	3505	#19	305	356	305	914	2591	1524	#13
	4115	#22	356	432	356	914	3048	1524	#16
	4724	#25	406	483	406	991	3200	1676	#16
	5334	#29	457	533	483	991	3353	1829	#16
6096	5944	#32	508	619	559	1143	3658	1829	#19

NOTES:

1. POST SIZES A, B, C, & D ARE SHOWN ON BD-677M (SHEET 4 OF 28).
2. FOR DETAIL 4, SEE BD-677M (SHEET 18 OF 28).
3. THESE CHARTS ARE DERIVED FROM BD-677M (SHEETS 20 OF 28).
4. FOR ALL DETAILS NOT SHOWN, REFER TO BD-677M & BC-777M.

MARK	DESCRIPTION	BY	CHK'D.	RECM'D.	DATE

REVISIONS

OCT. 15, 2008

PENNDOT DRAWING #2000-335 PE

COMMONWEALTH OF PENNSYLVANIA REGISTERED PROFESSIONAL JOSEPH J. MIECZKOWSKI ENGINEER PE-043189-E

I hereby certify that all assumptions made in designing these sound barrier wall panels have been validated either through construction details or special notes and information to the fabricator, Erector and Contractor.

FADDIS CONCRETE PRODUCTS
3515 KING'S HIGHWAY, DOWNINGTOWN, PA 19335

AcoustaCrete®
PRECAST ABSORPTIVE
SOUND BARRIER PANEL
CONCRETE POSTS

EMBEDDED IN SPREAD FOOTING (2 OF 4)

SHEET 17 OF 28

Detail 4
Precast Concrete Post Type C and D
U.S. Customary Units

Precast Concrete Post
Embedded in Spread Footing
Height Zone 0' - 14'
Wind Pressure = 20 psf

Concrete Post Reinforcement						Spread Footing			
Post Spacing PS (FT.)	Wall Height H (FT.)	A2 (Bar Size)	HE (IN.) (MIN.) Uncoated	HE (IN.) (MIN.) Epoxy	HL (IN.)	T (FT.)	L (FT.)	W (FT.)	F1 (Bar Size)
	5.5	#4	8	10	8	2.0	5.5	5.5	#4
	7.5	#4	8	10	8	2.0	5.5	5.5	#4
	9.5	#4	8	10	8	2.5	5.5	5.5	#4
	11.5	#4	8	10	8	2.5	5.5	5.5	#4
	13.5	#5	10	12	10	2.5	6.5	5.5	#4
	15.5	#5	10	12	10	3.0	7.0	5.5	#4
	17.5	#5	10	12	10	3.0	7.5	5.5	#4
	19.5	#6	12	14	12	3.0	8.0	5.5	#4
	21.5	#6	12	14	12	3.0	9.0	5.5	#5
	23.5	#7	14	17	14	3.3	9.5	5.5	#5
	25.5	#7	14	17	14	3.3	10.0	5.5	#5
12.0	27.5	#8	16	19	16	3.3	10.5	5.5	#5
	5.5	#4	8	10	8	2.0	5.5	5.5	#4
	7.5	#4	8	10	8	2.5	5.5	5.5	#4
	9.5	#4	8	10	8	2.5	5.5	5.5	#4
	11.25	#5	10	12	10	2.5	6.0	5.5	#4
	13.25	#5	10	12	10	3.0	7.0	5.5	#4
	15.25	#5	10	12	10	3.0	7.5	5.5	#4
	17.25	#6	12	14	12	3.0	8.5	5.5	#4
	19.25	#7	14	17	14	3.0	9.0	5.5	#5
	21.25	#7	14	17	14	3.3	10.0	5.5	#5
	23.25	#8	16	19	16	3.3	10.5	5.5	#6
	25.25	#9	18	21	19	3.8	11.0	5.5	#6
16.0	27.25	#9	18	21	19	3.8	11.5	6.0	#6
	5.25	#4	8	10	8	2.0	5.5	5.5	#4
	7.25	#4	8	10	8	2.5	5.5	5.5	#4
	9.25	#4	8	10	8	2.5	6.0	5.5	#4
	11.25	#5	10	12	10	3.0	6.5	5.5	#4
	13.25	#5	10	12	10	3.0	7.5	5.5	#4
	15.25	#6	12	14	12	3.0	8.0	5.5	#4
	17.25	#7	14	17	14	3.0	9.0	5.5	#5
	19.25	#7	14	17	14	3.0	10.0	5.5	#5
	21.25	#8	16	19	16	3.3	10.5	5.5	#6
	23.25	#9	18	21	19	3.8	11.0	5.5	#6
	25.25	#10	20	24	22	3.8	11.5	6.0	#6
20.0	27.25	#10	20	24	22	4.2	12.0	6.0	#6

Detail 4
Precast Concrete Post Type C and D
U.S. Customary Units

Precast Concrete Post
Embedded in Spread Footing
Height Zone Over 14'
Wind Pressure = 28 psf

Concrete Post Reinforcement						Spread Footing			
Post Spacing PS (FT.)	Wall Height H (FT.)	A2 (Bar Size)	HE (IN.) (MIN.) Uncoated	HE (IN.) (MIN.) Epoxy	HL (IN.)	T (FT.)	L (FT.)	W (FT.)	F1 (Bar Size)
	5.5	#4	8	10	8	2.0	5.5	5.5	#4
	7.5	#4	8	10	8	2.5	5.5	5.5	#4
	9.5	#4	8	10	8	2.5	6.0	5.5	#4
	11.5	#5	10	12	10	2.5	7.0	5.5	#4
	13.5	#5	10	12	10	3.0	7.5	5.5	#4
	15.5	#5	10	12	10	3.0	8.5	5.5	#4
	17.5	#6	12	14	12	3.0	9.5	5.5	#4
	19.5	#7	14	17	14	3.25	10.0	5.5	#5
	21.5	#7	14	17	14	3.25	11.0	5.5	#5
	23.5	#8	16	19	16	3.25	11.5	6.0	#5
	25.5	#9	18	21	19	3.75	12.0	6.0	#5
	27.5	#9	18	21	19	3.75	12.0	6.5	#5
12.0	29.5	#10	20	24	22	4.25	12.5	6.5	#5
	5.5	#4	8	10	8	2.0	5.5	5.5	#4
	7.5	#4	8	10	8	2.5	5.5	5.5	#4
	9.25	#5	10	12	10	2.5	6.5	5.5	#4
	11.25	#5	10	12	10	3.0	7.5	5.5	#4
	13.25	#5	10	12	10	3.0	8.5	5.5	#4
	15.25	#6	12	14	12	3.0	9.5	5.5	#5
	17.25	#7	14	17	14	3.25	10.5	5.5	#5
	19.25	#8	16	19	16	3.25	11.0	6.0	#5
	21.5	#9	18	21	19	3.75	11.5	6.0	#5
	23.5	#9	18	21	19	3.75	12.0	6.5	#5
	25.5	#10	20	24	22	4.25	12.5	6.5	#6
16.0	27.5	#11	22	26	24	4.25	13.0	7.0	#6
	5.5	#4	8	10	8	2.5	5.5	5.5	#4
	7.5	#4	8	10	8	2.5	6.0	5.5	#4
	9.5	#5	10	12	10	3.0	7.0	5.5	#4
	11.5	#5	10	12	10	3.0	8.5	5.5	#4
	13.5	#6	12	14	12	3.0	9.5	5.5	#5
	15.5	#7	14	17	14	3.25	10.0	5.5	#5
	17.5	#8	16	19	16	3.25	11.0	5.5	#6
	19.5	#9	18	21	19	3.75	11.5	6.0	#6
	21.5	#10	20	24	22	3.75	12.5	6.5	#6
	23.5	#10	20	24	22	4.25	13.0	6.5	#6
20.0	24.5	#11	22	26	24	4.25	13.0	7.0	#6

MARK	DESCRIPTION	BY	CHK'D.	RECM'D.	DATE

REVISIONS

OCT. 15, 2008

PENNDOT DRAWING #2000-335 PE

COMMONWEALTH OF PENNSYLVANIA
REGISTERED PROFESSIONAL
JOSEPH J. MIECZKOWSKI
ENGINEER
PE-043189-E

I hereby certify that all assumptions made in designing these sound barrier wall panels have been validated either through construction details or special notes and information to the fabricator, Erector and Contractor.

FADDIS CONCRETE PRODUCTS
3515 KING'S HIGHWAY, DOWNINGTOWN, PA 19335

AcoustaCrete®
PRECAST ABSORPTIVE
SOUND BARRIER PANEL
CONCRETE POSTS

EMBEDDED IN SPREAD FOOTING (3 OF 4)

SHEET 18 OF 28

NOTES:

1. POST SIZES A, B, C, & D ARE SHOWN ON BD-677M (SHEET 4 OF 28).
2. FOR DETAIL 4, SEE BD-677M (SHEET 18 OF 28).
3. THESE CHARTS ARE DERIVED FROM BD-677M (SHEETS 21 OF 28).
4. FOR ALL DETAILS NOT SHOWN, REFER TO BD-677M & BC-777M.

Detail 4
Precast Concrete Post Type C and D
Metric Units

Precast Concrete Post
Embedded in Spread Footing
Height Zone 0 - 4267
Wind Pressure = 1.34 kPa

Concrete Post Reinforcement						Spread Footing			
Post Spacing PS (mm)	Wall Height H (mm)	A2 (Bar Size)	HE (mm) (MIN.) Uncoated	HE (mm) (MIN.) Epoxy	HL (mm)	T (mm)	L (mm)	W (mm)	F1 (Bar Size)
	1676	#13	203	254	203	610	1676	1676	#13
	2286	#13	203	254	203	610	1676	1676	#13
	2896	#13	203	254	203	762	1676	1676	#13
	3505	#13	203	254	203	762	1676	1676	#13
	4115	#16	254	305	254	762	1981	1676	#13
	4724	#16	254	305	254	914	2134	1676	#13
	5334	#16	254	305	254	914	2286	1676	#13
	5944	#19	305	356	305	914	2438	1676	#13
	6553	#19	305	356	305	914	2743	1676	#16
	7163	#22	356	432	356	991	2896	1676	#16
	7772	#22	356	432	356	991	3048	1676	#16
3658	8382	#25	406	483	406	991	3200	1676	#16
	1676	#13	203	254	203	610	1676	1676	#13
	2286	#13	203	254	203	762	1676	1676	#13
	2896	#13	203	254	203	762	1676	1676	#13
	3429	#16	254	305	254	762	1829	1676	#13
	4039	#16	254	305	254	914	2134	1676	#13
	4648	#16	254	305	254	914	2286	1676	#13
	5258	#19	305	356	305	914	2591	1676	#13
	5867	#22	356	432	356	914	2743	1676	#16
	6477	#22	356	432	356	991	3048	1676	#16
	7087	#25	406	483	406	991	3200	1676	#19
	7696	#29	457	533	483	1143	3353	1676	#19
4877	8306	#29	457	533	483	1143	3505	1829	#19
	1600	#13	203	254	203	610	1676	1676	#13
	2210	#13	203	254	203	762	1676	1676	#13
	2819	#13	203	254	203	762	1829	1676	#13
	3429	#16	254	305	254	914	1981	1676	#13
	4039	#16	254	305	254	914	2286	1676	#13
	4648	#19	305	356	305	914	2438	1676	#13
	5258	#22	356	432	356	914	2743	1676	#16
	5867	#22	356	432	356	991	3048	1676	#16
	6477	#25	406	483	406	991	3200	1676	#19
	7087	#29	457	533	483	1143	3353	1676	#19
	7696	#32	508	610	559	1143	3505	1829	#19
6096	8306	#32	508	610	559	1295	3658	1829	#19

Detail 4
Precast Concrete Post Type C and D
Metric Units

Precast Concrete Post
Embedded in Spread Footing
Height Zone Over 4267
Wind Pressure = 1.34 kPa

Concrete Post Reinforcement						Spread Footing			
Post Spacing PS (mm)	Wall Height H (mm)	A2 (Bar Size)	HE (mm) (MIN.) Uncoated	HE (mm) (MIN.) Epoxy	HL (mm)	T (mm)	L (mm)	W (mm)	F1 (Bar Size)
	1676	#13	203	254	203	610	1676	1676	#13
	2286	#13	203	254	203	762	1676	1676	#13
	2896	#13	203	254	203	762	1829	1676	#13
	3505	#16	254	305	254	762	2134	1676	#13
	4115	#16	254	305	254	914	2286	1676	#13
	4724	#16	254	305	254	914	2591	1676	#13
	5334	#19	305	356	305	914	2896	1676	#13
	5944	#22	356	432	356	991	3048	1676	#16
	6553	#22	356	432	356	991	3353	1676	#16
	7163	#25	406	483	406	991	3505	1829	#16
	7772	#29	457	533	483	1143	3658	1829	#16
	8382	#29	457	533	483	1143	3658	1981	#16
3658	8992	#32	508	610	559	1295	3810	1981	#16
	1676	#13	203	254	203	610	1676	1676	#13
	2286	#13	203	254	203	762	1676	1676	#13
	2819	#16	254	305	254	762	1981	1676	#13
	3429	#16	254	305	254	914	2286	1676	#13
	4039	#16	254	305	254	914	2591	1676	#13
	4648	#19	305	356	305	914	2896	1676	#16
	5258	#22	356	432	356	991	3200	1676	#16
	5867	#25	406	483	406	991	3353	1829	#16
	6553	#29	457	533	483	1143	3505	1829	#16
	7163	#29	457	533	483	1143	3658	1981	#16
	7772	#32	508	610	559	1295	3810	1981	#19
4877	8382	#36	559	660	610	1295	3962	2134	#19
	1676	#13	203	254	203	762	1676	1676	#13
	2286	#13	203	254	203	762	1829	1676	#13
	2896	#16	254	305	254	914	2134	1676	#13
	3505	#16	254	305	254	914	2591	1676	#13
	4115	#19	305	356	305	914	2896	1676	#16
	4724	#22	356	432	356	991	3048	1676	#16
	5334	#25	406	483	406	991	3353	1676	#19
	5944	#29	457	533	483	1143	3505	1829	#19
	6553	#32	508	610	559	1143	3810	1981	#19
	7163	#32	508	610	559	1295	3962	1981	#19
6096	7468	#36	559	660	610	1295	3962	2134	#19

MARK	DESCRIPTION	BY	CHK'D.	RECM'D.	DATE

REVISIONS

OCT. 15, 2008

PENNDOT DRAWING #2000-335 PE

NOTES:

1. POST SIZES A, B, C, & D ARE SHOWN ON BD-677M (SHEET 4 OF 28).
2. FOR DETAIL 4, SEE BD-677M (SHEET 18 OF 28).
3. THESE CHARTS ARE DERIVED FROM BD-677M (SHEETS 22 OF 28).
4. FOR ALL DETAILS NOT SHOWN, REFER TO BD-677M & BC-777M.

COMMONWEALTH OF PENNSYLVANIA
REGISTERED PROFESSIONAL
JOSEPH J. MIECZKOWSKI
ENGINEER
PE-043185-E

I hereby certify that all assumptions made in designing these sound barrier wall panels have been validated either through construction details or special notes and information to the fabricator, Erector and Contractor.

FADDIS CONCRETE PRODUCTS
3515 KING'S HIGHWAY, DOWNINGTOWN, PA 19335

AcoustaCrete®
PRECAST ABSORPTIVE
SOUND BARRIER PANEL
CONCRETE POSTS

EMBEDDED IN SPREAD FOOTING (4 OF 4)

Detail 1
U.S. Customary Units

Steel Post with Base Plate Connection to Caisson
Height Zone 0' - 14'
Wind Pressure = 20 psf

Steel Post			Base Plate				Anchor Bolts		Anchor Plates	
Post Spacing PS (FT.)	Wall Height H (FT.)	Steel Post	t (IN.)	ℓ' (IN.)	w (IN.)	F (IN.)	D (IN.)	P (IN.)	l1 (IN.)	F1 (IN.)
	5.5	W8 x 31	3/4	16	12	1 1/2	3/4	5	15	1
	7.5	W8 x 31	3/4	17	13	2	1	5 3/4	15	1
	9.5	W8 x 31	7/8	17	13	2	1	5 3/4	15	1
	11.25	W8 x 31	1	18	14	2 1/4	1 1/4	6 3/4	16	1 1/4
	13.25	W8 x 48	1 1/8	18	14	2 1/4	1 1/4	6 3/4	16	1 1/4
	15.25	W10 x 49	1 1/4	20	14	2 1/4	1 1/4	7	18	1 1/4
	17.25	W10 x 60	1 3/8	21	14	2 3/4	1 1/2	7 3/4	18 1/2	1 1/2
	19.25	W10 x 77	1 1/2	22	14	2 3/4	1 1/2	8	19 1/2	1 1/2
	21.25	W10 x 100	1 5/8	22	14	2 3/4	1 1/2	8	19 1/2	1 1/2
	23.25	W12 x 120	1 3/4	25	15	3	1 3/4	9	22 1/2	1 3/4
	25.25	W12 x 120	1 3/4	25	15	3	1 3/4	9	22 1/2	1 3/4
12.0	27.25	W12 x 136	1 7/8	25	15	3	1 3/4	9	22 1/2	1 3/4
	5.25	W8 x 31	3/4	17	13	2	1	5 3/4	15	1
	7.25	W8 x 31	7/8	17	13	2	1	5 3/4	15	1
	9.25	W8 x 31	1	18	14	2 1/4	1 1/4	6 3/4	16	1 1/4
	11.25	W8 x 35	1 1/8	18	14	2 1/4	1 1/4	6 3/4	16	1 1/4
	13.25	W10 x 49	1 1/4	21	14	2 3/4	1 1/2	7 3/4	18 1/2	1 1/2
	15.25	W10 x 54	1 3/8	21	14	2 3/4	1 1/2	7 3/4	18 1/2	1 1/2
	17.25	W10 x 77	1 5/8	22	14	2 3/4	1 1/2	8	19 1/2	1 1/2
	19.25	W10 x 100	1 3/4	22	14	2 3/4	1 1/2	8 1/4	19 1/2	1 1/2
	21.25	W12 x 120	1 7/8	25	15	3	1 3/4	9	22 1/2	1 3/4
	23.25	W12 x 120	1 7/8	25	15	3	1 3/4	9	22 1/2	1 3/4
	25.25	W12 x 152	2	27	16	3 1/2	2	10	24	2
16.0	27.25	W12 x 170	2 1/8	27	16	3 1/2	2	10	24	2
	5.25	W8 x 31	3/4	17	13	2	1	5 3/4	15	1
	7.25	W8 x 31	7/8	18	14	2 1/4	1 1/4	6 1/2	16	1 1/4
	9.25	W8 x 31	1 1/8	18	14	2 1/4	1 1/4	6 3/4	16	1 1/4
	11.25	W8 x 48	1 1/4	19	14	2 3/4	1 1/2	7 3/4	16 1/2	1 1/2
	13.25	W10 x 49	1 3/8	21	14	2 3/4	1 1/2	7 3/4	18 1/2	1 1/2
	15.25	W10 x 68	1 5/8	21	14	2 3/4	1 1/2	8	18 1/2	1 1/2
	17.25	W10 x 88	1 3/4	23	15	3	1 3/4	9	20 1/2	1 3/4
	19.25	W12 x 120	1 7/8	25	15	3	1 3/4	9	22 1/2	1 3/4
	21.25	W12 x 120	1 7/8	25	15	3	1 3/4	9	22 1/2	1 3/4
	23.25	W12 x 152	2	27	16	3 1/2	2	10	24	2
20.0	25.25	W12 x 170	2 1/4	27	16	3 1/2	2	10 1/4	24	2

Detail 1
U.S. Customary Units

Steel Post with Base Plate Connection to Caisson
Height Zones Over 14'
Wind Pressure = 28 psf

Steel Post			Base Plate				Anchor Bolts		Anchor Plates	
Post Spacing PS (FT.)	Wall Height H (FT.)	Steel Post	t (IN.)	ℓ' (IN.)	w (IN.)	F (IN.)	D (IN.)	P (IN.)	l1 (IN.)	F1 (IN.)
	5.5	W8 x 31	3/4	17	13	2	1	5 3/4	15	1
	7.5	W8 x 31	7/8	17	13	2	1	5 3/4	15	1
	9.5	W8 x 31	1	18	14	2 1/4	1 1/4	6 3/4	16	1 1/4
	11.25	W8 x 40	1 1/8	18	14	2 1/4	1 1/4	6 3/4	16	1 1/4
	13.25	W10 x 49	1 1/4	21	14	2 3/4	1 1/2	7 3/4	18 1/2	1 1/2
	15.25	W10 x 60	1 3/8	21	14	2 3/4	1 1/2	7 3/4	18 1/2	1 1/2
	17.25	W10 x 77	1 5/8	22	14	2 3/4	1 1/2	8	19 1/2	1 1/2
	19.25	W10 x 100	1 3/4	23	15	3	1 3/4	9	20 1/2	1 3/4
	21.25	W12 x 120	1 7/8	25	15	3	1 3/4	9	22 1/2	1 3/4
	23.25	W12 x 120	1 7/8	25	15	3	1 3/4	9	22 1/2	1 3/4
	25.25	W12 x 152	2	27	16	3 1/2	2	10	24	2
12.0	27.25	W12 x 190	2 1/4	27	16	3 1/2	2	10 1/4	24	2
	5.5	W8 x 31	3/4	17	13	2	1	5 3/4	15	1
	7.5	W8 x 31	7/8	18	14	2 1/4	1 1/4	6 1/2	16	1 1/4
	9.5	W8 x 31	1 1/8	18	14	2 1/4	1 1/4	6 3/4	16	1 1/4
	11.25	W8 x 48	1 3/8	19	14	2 3/4	1 1/2	7 3/4	16 1/2	1 1/2
	13.25	W10 x 54	1 1/2	21	14	2 3/4	1 1/2	8	18 1/2	1 1/2
	15.25	W10 x 77	1 5/8	22	14	2 3/4	1 1/2	8	19 1/2	1 1/2
	17.25	W10 x 100	1 3/4	23	15	3	1 3/4	9	20 1/2	1 3/4
	19.25	W12 x 120	1 7/8	25	15	3	1 3/4	9	22 1/2	1 3/4
	21.25	W12 x 120	2	26	16	3 1/2	2	10	23	2
16.0	23.25	W12 x 152	2 1/8	27	16	3 1/2	2	10	24	2
	5.5	W8 x 31	3/4	17	13	2	1	5 3/4	15	1
	7.5	W8 x 31	1	18	14	2 1/4	1 1/4	6 3/4	16	1 1/4
	9.5	W8 x 35	1 1/4	19	14	2 3/4	1 1/2	7 3/4	16 1/2	1 1/2
	11.25	W10 x 49	1 3/8	21	14	2 3/4	1 1/2	7 3/4	18 1/2	1 1/2
	13.25	W10 x 68	1 5/8	21	14	2 3/4	1 1/2	8	18 1/2	1 1/2
	15.25	W10 x 88	1 3/4	23	15	3	1 3/4	9	20 1/2	1 3/4
	17.25	W12 x 120	1 7/8	25	15	3	1 3/4	9	22 1/2	1 3/4
	19.25	W12 x 136	2 1/8	26	16	3 1/2	2	10	23	2
20.0	21.25	W12 x 170	2 1/4	27	16	3 1/2	2	10 1/4	24	2

MARK	DESCRIPTION	BY	CHK'D.	RECM'D.	DATE

REVISIONS

OCT. 15, 2008

PENNDOT DRAWING #2000-335 PE

NOTES:

1. FOR DETAIL 1, SEE BD-678M (SHEET 4 OF 18).
2. THESE CHARTS ARE DERIVED FROM BD-678M (SHEET 5 OF 18).
3. FOR ALL DETAILS NOT SHOWN, REFER TO BD-678M & BC-778M.

COMMONWEALTH OF PENNSYLVANIA
REGISTERED PROFESSIONAL
JOSEPH J. MIECZKOWSKI
ENGINEER
PE-043189-E

I hereby certify that all assumptions made in designing these sound barrier wall panels have been validated either through construction details or special notes and information to the fabricator, Erector and Contractor.

FADDIS CONCRETE PRODUCTS
3515 KING'S HIGHWAY, DOWNINGTOWN, PA 19335

AcoustaCrete®
PRECAST ABSORPTIVE
SOUND BARRIER PANEL
STEEL POSTS

BASE PLATE TO CAISSON (1 OF 2)

Detail 1
Metric Units

Steel Post with Base Plate Connection to Caisson
Height Zone 0 - 4267
Wind Pressure = 0.96 kPa

Steel Post			Base Plate				Anchor Bolts		Anchor Plates	
Post Spacing PS (mm)	Wall Height H (mm)	Steel Post	t (mm)	ℓ' (mm)	w (mm)	F (mm)	D (mm)	P (mm)	l1 (mm)	F1 (mm)
	1676	W200 x 46	19	406	305	38	19.1	127	381	25
	2286	W200 x 46	19	432	330	51	25.4	146	381	25
	2896	W200 x 46	22	432	330	51	25.4	146	381	25
	3429	W200 x 46	25	457	356	57	31.8	171	406	32
	4039	W200 x 71	29	457	356	57	31.8	171	406	32
	4648	W250 x 73	32	508	356	57	31.8	178	457	32
	5258	W250 x 89	35	533	356	70	38.1	197	470	38
	5867	W250 x 115	38	559	356	70	38.1	203	495	38
	6477	W250 x 149	41	559	356	70	38.1	203	495	38
	7087	W310 x 179	44	635	381	76	44.5	229	572	44
	7696	W310 x 179	44	635	381	76	44.5	229	572	44
3658	8306	W310 x 202	48	635	381	76	44.5	229	572	44
	1600	W200 x 46	19	432	330	51	25.4	146	381	25
	2210	W200 x 46	22	432	330	51	25.4	146	381	25
	2819	W200 x 46	25	457	356	57	31.8	171	406	32
	3429	W200 x 52	29	457	356	57	31.8	171	406	32
	4039	W250 x 73	32	533	356	70	38.1	197	470	38
	4648	W250 x 80	35	533	356	70	38.1	197	470	38
	5258	W250 x 115	41	559	356	70	38.1	203	495	38
	5867	W250 x 149	44	559	356	70	38.1	210	495	38
	6477	W310 x 179	48	635	381	76	44.5	229	572	44
	7087	W310 x 179	48	635	381	76	44.5	229	572	44
	7696	W310 x 226	51	686	406	98	50.8	254	610	51
4877	8306	W310 x 253	54	686	406	89	50.8	254	610	51
	1600	W200 x 46	19	432	330	51	25.4	146	381	25
	2210	W200 x 46	22	457	356	57	31.8	165	406	32
	2819	W200 x 46	29	457	356	57	31.8	171	406	32
	3429	W200 x 71	32	483	356	70	38.1	197	419	38
	4039	W250 x 73	35	533	356	70	38.1	197	470	38
	4648	W250 x 101	41	533	356	70	38.1	203	470	38
	5258	W250 x 131	44	584	381	76	44.5	229	521	44
	5867	W310 x 179	48	635	381	76	44.5	229	572	44
	6477	W310 x 179	48	635	381	76	44.5	229	572	44
	7087	W310 x 226	51	686	406	89	50.8	254	610	51
6096	7696	W310 x 253	57	686	406	89	50.8	260	610	51

Detail 1
Metric Units

Steel Post with Base Plate Connection to Caisson
Height Zones Over 4267
Wind Pressure = 1.34 kPa

Steel Post			Base Plate				Anchor Bolts		Anchor Plates	
Post Spacing PS (mm)	Wall Height H (mm)	Steel Post	t (mm)	ℓ' (mm)	w (mm)	F (mm)	D (mm)	P (mm)	l1 (mm)	F1 (mm)
	1676	W200 x 46	19	432	330	51	25.4	146	381	25
	2286	W200 x 46	22	432	330	51	25.4	146	381	25
	2896	W200 x 46	25	457	356	57	31.8	171	406	32
	3429	W200 x 59	29	457	356	57	31.8	171	406	32
	4039	W250 x 73	32	533	356	70	38.1	197	470	38
	4648	W250 x 89	35	533	356	70	38.1	197	470	38
	5258	W250 x 115	41	559	356	70	38.1	203	495	38
	5867	W250 x 149	44	584	381	76	44.5	229	521	44
	6477	W310 x 179	48	635	381	76	44.5	229	572	44
	7087	W310 x 179	48	635	381	76	44.5	229	572	44
	7696	W310 x 226	51	686	406	89	50.8	254	610	51
3658	8306	W310 x 283	57	686	406	89	50.8	260	610	51
	1676	W200 x 46	19	432	330	51	25.4	146	381	25
	2286	W200 x 46	22	457	356	57	31.8	165	406	32
	2896	W200 x 46	29	457	356	57	31.8	171	406	32
	3429	W200 x 71	35	483	356	70	38.1	197	419	38
	4039	W250 x 80	38	533	356	70	38.1	203	470	38
	4648	W250 x 115	41	559	356	70	38.1	203	495	38
	5258	W250 x 149	44	584	381	76	44.5	229	521	44
	5867	W310 x 179	48	635	381	76	44.5	229	572	44
	6477	W310 x 179	51	660	406	89	50.8	254	584	51
4877	7087	W310 x 226	54	686	406	89	50.8	254	610	51
	1676	W200 x 46	19	432	330	51	25.4	146	381	25
	2286	W200 x 46	25	457	356	57	31.8	171	406	32
	2896	W200 x 52	32	483	356	70	38.1	197	419	38
	3429	W250 x 73	35	533	356	70	38.1	197	470	38
	4039	W250 x 101	41	533	356	70	38.1	203	470	38
	4648	W250 x 131	44	584	381	76	44.5	229	521	44
	5258	W310 x 179	48	635	381	76	44.5	229	572	44
	5867	W310 x 202	54	660	406	89	50.8	254	584	51
6096	6477	W310 x 253	57	686	406	89	50.8	260	610	51

MARK	DESCRIPTION	BY	CHK'D.	RECM'D.	DATE

REVISIONS

OCT. 15, 2008

PENNDOT DRAWING #2000-335 PE

NOTES:

1. FOR DETAIL 1, SEE BD-678M (SHEET 4 OF 18).
2. THESE CHARTS ARE DERIVED FROM BD-678M (SHEET 6 OF 18).
3. FOR ALL DETAILS NOT SHOWN, REFER TO BD-678M & BC-778M.

COMMONWEALTH OF PENNSYLVANIA
REGISTERED PROFESSIONAL
JOSEPH J. MIECZKOWSKI
ENGINEER
PE-043189-E

I hereby certify that all assumptions made in designing these sound barrier wall panels have been validated either through construction details or special notes and information to the fabricator, Erector and Contractor.

FADDIS CONCRETE PRODUCTS
3515 KING'S HIGHWAY, DOWNINGTOWN, PA 19335

AcoustaCrete®
PRECAST ABSORPTIVE
SOUND BARRIER PANEL
STEEL POSTS

BASE PLATE TO CAISSON (2 OF 2)

Detail 2
U.S. Customary Units

Steel Post with Base Plate Connection to Spread Footing
Height Zone 0' - 14'
Wind Pressure = 20 psf

Steel Post			Base Plate				Anchor Bolts			Spread Footing			
Post Spacing PS (FT.)	Wall Height H (FT.)	Steel Post	t (IN.)	l (IN.)	w (IN.)	F (IN.)	D (IN.)	S (IN.)	P (IN.)	T (FT.)	L (FT.)	W (FT.)	F1 (BAR SIZE)
	5.5	W8 x 31	3/4	16	12	1 1/2	3/4	17	5	2.00	4.5	3.0	# 4
	7.5	W8 x 31	3/4	17	13	2	1	22	5 3/4	2.50	5.5	3.0	# 4
	9.5	W8 x 31	7/8	17	13	2	1	22	5 3/4	2.50	6.0	3.5	# 4
	11.25	W8 x 31	1	18	14	2 1/4	1 1/4	28	6 3/4	3.00	6.5	3.5	# 4
	13.25	W8 x 48	1 1/8	18	14	2 1/4	1 1/4	28	6 3/4	3.00	7.5	4.0	# 4
	15.25	W10 x 49	1 1/4	20	14	2 1/4	1 1/4	28	7	3.00	8.0	4.0	# 4
	17.25	W10 x 60	1 3/8	21	14	2 3/4	1 1/2	33	7 3/4	3.25	8.5	4.5	# 5
	19.25	W10 x 77	1 1/2	22	14	2 3/4	1 1/2	33	8	3.25	9.0	4.5	# 5
	21.25	W10 x 100	1 5/8	22	14	2 3/4	1 1/2	33	8	3.25	9.5	5.0	# 5
	23.25	W12 x 120	1 3/4	25	15	3	1 3/4	39	9	3.75	10.0	5.0	# 5
	25.25	W12 x 120	1 3/4	25	15	3	1 3/4	39	9	3.75	10.5	5.5	# 5
12.0	27.25	W12 x 136	1 7/8	25	15	3	1 3/4	39	9	3.75	11.0	5.5	# 5
	5.25	W8 x 31	3/4	17	13	2	1	22	5 3/4	2.50	5.0	3.0	# 4
	7.25	W8 x 31	7/8	17	13	2	1	22	5 3/4	2.50	6.0	3.0	# 4
	9.25	W8 x 31	1	18	14	2 1/4	1 1/4	28	6 3/4	3.00	6.5	3.5	# 4
	11.25	W8 x 35	1 1/8	18	14	2 1/4	1 1/4	28	6 3/4	3.00	7.0	4.0	# 4
	13.25	W10 x 49	1 1/4	21	14	2 3/4	1 1/2	33	7 3/4	3.25	8.0	4.0	# 5
	15.25	W10 x 54	1 3/8	21	14	2 3/4	1 1/2	33	7 3/4	3.25	8.5	4.5	# 5
	17.25	W10 x 77	1 5/8	22	14	2 3/4	1 1/2	33	8	3.25	9.0	5.0	# 5
	19.25	W10 x 100	1 3/4	22	14	2 3/4	1 1/2	33	8 1/4	3.25	10.0	5.0	# 5
	21.25	W12 x 120	1 7/8	25	15	3	1 3/4	39	9	3.75	10.5	5.5	# 5
	23.25	W12 x 120	1 7/8	25	15	3	1 3/4	39	9	3.75	11.0	5.5	# 5
	25.25	W12 x 152	2	27	16	3 1/2	2	44	10	4.25	11.0	6.0	# 5
16.0	27.25	W12 x 170	2 1/8	27	16	3 1/2	2	44	10	4.25	11.5	6.0	# 6
	5.25	W8 x 31	3/4	17	13	2	1	22	5 3/4	2.50	5.0	3.0	# 4
	7.25	W8 x 31	7/8	18	14	2 1/4	1 1/4	28	6 1/2	3.00	6.0	3.5	# 4
	9.25	W8 x 31	1 1/8	18	14	2 1/4	1 1/4	28	6 3/4	3.00	7.0	3.5	# 4
	11.25	W8 x 48	1 1/4	19	14	2 3/4	1 1/2	33	7 3/4	3.25	7.5	4.0	# 5
	13.25	W10 x 49	1 3/8	21	14	2 3/4	1 1/2	33	7 3/4	3.25	8.5	4.5	# 5
	15.25	W10 x 68	1 5/8	21	14	2 3/4	1 1/2	33	8	3.25	9.0	4.5	# 5
	17.25	W10 x 88	1 3/4	23	15	3	1 3/4	39	9	3.75	9.5	5.0	# 5
	19.25	W12 x 120	1 7/8	25	15	3	1 3/4	39	9	3.75	10.0	5.5	# 5
	21.25	W12 x 120	1 7/8	25	15	3	1 3/4	39	9	3.75	11.0	5.5	# 6
	23.25	W12 x 152	2	27	16	3 1/2	2	44	10	4.25	11.5	6.0	# 6
20.0	25.25	W12 x 170	2 1/4	27	16	3 1/2	2	44	10 1/4	4.25	12.0	6.0	# 6

Detail 2
U.S. Customary Units

Steel Post with Base Plate Connection to Spread Footing
Height Zones Over 14'
Wind Pressure = 28 psf

Steel Post			Base Plate				Anchor Bolts			Spread Footing			
Post Spacing PS (FT.)	Wall Height H (FT.)	Steel Post	t (IN.)	l (IN.)	w (IN.)	F (IN.)	D (IN.)	S (IN.)	P (IN.)	T (FT.)	L (FT.)	W (FT.)	F1 (BAR SIZE)
	5.5	W8 x 31	3/4	17	13	2	1	22	5 3/4	2.50	5.5	3.0	# 4
	7.5	W8 x 31	7/8	17	13	2	1	22	5 3/4	2.50	6.5	3.5	# 4
	9.5	W8 x 31	1	18	14	2 1/4	1 1/4	28	6 3/4	3.00	7.0	4.0	# 4
	11.25	W8 x 40	1 1/8	18	14	2 1/4	1 1/4	28	6 3/4	3.00	8.0	4.0	# 4
	13.25	W10 x 49	1 1/4	21	14	2 3/4	1 1/2	33	7 3/4	3.25	8.5	4.5	# 4
	15.25	W10 x 60	1 3/8	21	14	2 3/4	1 1/2	33	7 3/4	3.25	9.0	5.0	# 4
	17.25	W10 x 77	1 5/8	22	14	2 3/4	1 1/2	33	8	3.25	10.0	5.0	# 5
	19.25	W10 x 100	1 3/4	23	15	3	1 3/4	39	9	3.75	10.5	5.5	# 5
	21.25	W12 x 120	1 7/8	25	15	3	1 3/4	39	9	3.75	11.0	6.0	# 5
	23.25	W12 x 120	1 7/8	25	15	3	1 3/4	39	9	3.75	11.5	6.0	# 5
	25.25	W12 x 152	2	27	16	3 1/2	2	44	10	4.25	12.0	6.0	# 5
12.0	27.25	W12 x 190	2 1/4	27	16	3 1/2	2	44	10 1/4	4.25	12.5	6.5	# 5
	5.5	W8 x 31	3/4	17	13	2	1	22	5 3/4	2.50	6.0	3.0	# 4
	7.5	W8 x 31	7/8	18	14	2 1/4	1 1/4	28	6 1/2	3.00	7.0	3.5	# 4
	9.5	W8 x 31	1 1/8	18	14	2 1/4	1 1/4	28	6 3/4	3.00	8.0	4.0	# 4
	11.25	W8 x 48	1 3/8	19	14	2 3/4	1 1/2	33	7 3/4	3.25	8.5	4.5	# 4
	13.25	W10 x 54	1 1/2	21	14	2 3/4	1 1/2	33	8	3.25	9.0	5.0	# 5
	15.25	W10 x 77	1 5/8	22	14	2 3/4	1 1/2	33	8	3.25	10.0	5.0	# 5
	17.25	W10 x 100	1 3/4	23	15	3	1 3/4	39	9	3.75	10.5	5.5	# 5
	19.25	W12 x 120	1 7/8	25	15	3	1 3/4	39	9	3.75	11.0	6.0	# 5
	21.25	W12 x 120	2	26	16	3 1/2	2	44	10	4.25	12.0	6.0	# 5
16.0	23.25	W12 x 152	2 1/8	27	16	3 1/2	2	44	10	4.25	12.0	6.5	# 5
	5.5	W8 x 31	3/4	17	13	2	1	22	5 3/4	2.50	6.0	3.5	# 4
	7.5	W8 x 31	1	18	14	2 1/4	1 1/4	28	6 3/4	3.00	7.0	4.0	# 4
	9.5	W8 x 35	1 1/4	19	14	2 3/4	1 1/2	33	7 3/4	3.25	8.0	4.5	# 4
	11.25	W10 x 49	1 3/8	21	14	2 3/4	1 1/2	33	7 3/4	3.25	9.0	4.5	# 5
	13.25	W10 x 68	1 5/8	21	14	2 3/4	1 1/2	33	8	3.25	10.0	5.0	# 5
	15.25	W10 x 88	1 3/4	23	15	3	1 3/4	39	9	3.75	10.5	5.5	# 5
	17.25	W12 x 120	1 7/8	25	15	3	1 3/4	39	9	3.75	11.0	6.0	# 5
	19.25	W12 x 136	2 1/8	26	16	3 1/2	2	44	10	4.25	12.0	6.0	# 5
20.0	21.25	W12 x 170	2 1/4	27	16	3 1/2	2	44	10 1/4	4.25	12.5	6.5	# 6

NOTES:

1. FOR DETAIL 2, SEE BD-678M (SHEET 7 OF 18).
2. THESE CHARTS ARE DERIVED FROM BD-678M (SHEET 8 OF 18).
3. FOR ALL DETAILS NOT SHOWN, REFER TO BD-678M & BC-778M.

MARK	DESCRIPTION	BY	CHK'D.	RECM'D.	DATE

REVISIONS

OCT. 15, 2008

PENNDOT DRAWING #2000-335 PE

COMMONWEALTH OF PENNSYLVANIA REGISTERED PROFESSIONAL JOSEPH J. MIECZKOWSKI ENGINEER PE-043189-E

I hereby certify that all assumptions made in designing these sound barrier wall panels have been validated either through construction details or special notes and information to the fabricator, Erector and Contractor.

FADDIS CONCRETE PRODUCTS
3515 KING'S HIGHWAY, DOWNINGTOWN, PA 19335

AcoustaCrete®
PRECAST ABSORPTIVE
SOUND BARRIER PANEL
STEEL POSTS

BASE PLATE TO SPREAD FOOTING (1 OF 2)

Detail 2
Metric Units

Steel Post with Base Plate Connection to Spread Footing
Height Zone 0 - 4267
Wind Pressure = 0.96 kPa

Steel Post			Base Plate				Anchor Bolts			Spread Footing			
Post Spacing PS (mm)	Wall Height H (mm)	Steel Post	t (mm)	l (mm)	w (mm)	F (mm)	D (mm)	S (mm)	P (mm)	T (mm)	L (mm)	W (mm)	F1 (BAR SIZE)
	1676	W200 x 46	19	406	305	38	19.1	432	127	610	1372	914	# 13
	2286	W200 x 46	19	432	330	51	25.4	559	146	762	1676	914	# 13
	2896	W200 x 46	22	432	330	51	25.4	559	146	762	1829	1067	# 13
	3429	W200 x 46	25	457	356	57	31.8	711	171	914	1981	1067	# 13
	4039	W200 x 71	29	457	356	57	31.8	711	171	914	2286	1219	# 13
	4648	W250 x 73	32	508	356	57	31.8	711	178	914	2438	1219	# 13
	5258	W250 x 89	35	533	356	70	38.1	838	197	991	2591	1372	# 16
	5867	W250 x 115	38	559	356	70	38.1	838	203	991	2743	1372	# 16
	6477	W250 x 149	41	559	356	70	38.1	838	203	991	2896	1524	# 16
	7087	W310 x 179	44	635	381	76	44.5	991	229	1143	3048	1524	# 16
	7696	W310 x 179	44	635	381	76	44.5	991	229	1143	3200	1676	# 16
3658	8306	W310 x 202	48	635	381	76	44.5	991	229	1143	3353	1676	# 16
	1600	W200 x 46	19	432	330	51	25.4	559	146	762	1524	914	# 13
	2210	W200 x 46	22	432	330	51	25.4	559	146	762	1829	914	# 13
	2819	W200 x 46	25	457	356	57	31.8	711	171	914	1981	1067	# 13
	3429	W200 x 52	29	457	356	57	31.8	711	171	914	2134	1219	# 13
	4039	W250 x 73	32	533	356	70	38.1	838	197	991	2438	1219	# 16
	4648	W250 x 80	35	533	356	70	38.1	838	197	991	2591	1372	# 16
	5258	W250 x 115	41	559	356	70	38.1	838	203	991	2743	1524	# 16
	5867	W250 x 149	44	559	356	70	38.1	838	210	991	3048	1524	# 16
	6477	W310 x 179	48	635	381	76	44.5	991	229	1143	3200	1676	# 16
	7087	W310 x 179	48	635	381	76	44.5	991	229	1143	3353	1676	# 16
	7696	W310 x 226	51	686	406	98	50.8	1118	254	1295	3353	1829	# 16
4877	8306	W310 x 253	54	686	406	89	50.8	1118	254	1295	3505	1829	# 19
	1600	W200 x 46	19	432	330	51	25.4	559	146	762	1524	914	# 13
	2210	W200 x 46	22	457	356	57	31.8	711	165	914	1829	1067	# 13
	2819	W200 x 46	29	457	356	57	31.8	711	171	914	2134	1067	# 13
	3429	W200 x 71	32	483	356	70	38.1	838	197	991	2286	1219	# 16
	4039	W250 x 73	35	533	356	70	38.1	838	197	991	2591	1372	# 16
	4648	W250 x 101	41	533	356	70	38.1	838	203	991	2743	1372	# 16
	5258	W250 x 131	44	584	381	76	44.5	991	229	1143	2896	1524	# 16
	5867	W310 x 179	48	635	381	76	44.5	991	229	1143	3048	1676	# 16
	6477	W310 x 179	48	635	381	76	44.5	991	229	1143	3353	1676	# 19
	7087	W310 x 226	51	686	406	89	50.8	1118	254	1295	3505	1829	# 19
6096	7696	W310 x 253	57	686	406	89	50.8	1118	260	1295	3658	1829	# 19

Detail 2
Metric Units

Steel Post with Base Plate Connection to Spread Footing
Height Zones Over 4267
Wind Pressure = 1.34 kPa

Steel Post			Base Plate				Anchor Bolts			Anchor Plates			
Post Spacing PS (mm)	Wall Height H (mm)	Steel Post	t (mm)	l (mm)	w (mm)	F (mm)	D (mm)	S (mm)	P (mm)	T (mm)	L (mm)	W (mm)	F1 (BAR SIZE)
	1676	W200 x 46	19	432	330	51	25.4	559	146	762	1676	914	# 13
	2286	W200 x 46	22	432	330	51	25.4	559	146	762	1981	1067	# 13
	2896	W200 x 46	25	457	356	57	31.8	711	171	914	2134	1219	# 13
	3429	W200 x 59	29	457	356	57	31.8	711	171	914	2438	1219	# 13
	4039	W250 x 73	32	533	356	70	38.1	838	197	991	2591	1372	# 13
	4648	W250 x 89	35	533	356	70	38.1	838	197	991	2743	1524	# 13
	5258	W250 x 115	41	559	356	70	38.1	838	203	991	3048	1524	# 16
	5867	W250 x 149	44	584	381	76	44.5	991	229	1143	3200	1676	# 16
	6477	W310 x 179	48	635	381	76	44.5	991	229	1143	3353	1829	# 16
	7087	W310 x 179	48	635	381	76	44.5	991	229	1143	3505	1829	# 16
	7696	W310 x 226	51	686	406	89	50.8	1118	254	1295	3658	1829	# 16
3658	8306	W310 x 283	57	686	406	89	50.8	1118	260	1295	3810	1981	# 16
	1676	W200 x 46	19	432	330	51	25.4	559	146	762	1829	914	# 13
	2286	W200 x 46	22	457	356	57	31.8	711	165	914	2134	1067	# 13
	2896	W200 x 46	29	457	356	57	31.8	711	171	914	2438	1219	# 13
	3429	W200 x 71	35	483	356	70	38.1	838	197	991	2591	1372	# 13
	4039	W250 x 80	38	533	356	70	38.1	838	203	991	2743	1524	# 16
	4648	W250 x 115	41	559	356	70	38.1	838	203	991	3048	1524	# 16
	5258	W250 x 149	44	584	381	76	44.5	991	229	1143	3200	1676	# 16
	5867	W310 x 179	48	635	381	76	44.5	991	229	1143	3353	1829	# 16
	6477	W310 x 179	51	660	406	89	50.8	1118	254	1295	3658	1829	# 16
4877	7087	W310 x 226	54	686	406	89	50.8	1118	254	1295	3658	1981	# 16
	1676	W200 x 46	19	432	330	51	25.4	559	146	762	1829	1067	# 13
	2286	W200 x 46	25	457	356	57	31.8	711	171	914	2134	1219	# 13
	2896	W200 x 52	32	483	356	70	38.1	838	197	991	2438	1372	# 13
	3429	W250 x 73	35	533	356	70	38.1	838	197	991	2743	1372	# 16
	4039	W250 x 101	41	533	356	70	38.1	838	203	991	3048	1524	# 16
	4648	W250 x 131	44	584	381	76	44.5	991	229	1143	3200	1676	# 16
	5258	W310 x 179	48	635	381	76	44.5	991	229	1143	3353	1829	# 16
	5867	W310 x 202	54	660	406	89	50.8	1118	254	1295	3658	1829	# 16
6096	6477	W310 x 253	57	686	406	89	50.8	1118	260	1295	3810	1981	# 19

NOTES:

1. FOR DETAIL 2, SEE BD-678M (SHEET 7 OF 18).
2. THESE CHARTS ARE DERIVED FROM BD-678M (SHEET 9 OF 18).
3. FOR ALL DETAILS NOT SHOWN, REFER TO BD-678M & BC-778M.

MARK	DESCRIPTION	BY	CHK'D.	RECM'D.	DATE

REVISIONS

OCT. 15, 2008

PENNDOT DRAWING #2000-335 PE

COMMONWEALTH OF PENNSYLVANIA
REGISTERED PROFESSIONAL
JOSEPH J. MIECZKOWSKI
ENGINEER
PE-043186-E

I hereby certify that all assumptions made in designing these sound barrier wall panels have been validated either through construction details or special notes and information to the fabricator, Erector and Contractor.

FADDIS CONCRETE PRODUCTS
3515 KING'S HIGHWAY, DOWNINGTOWN, PA 19335

AcoustaCrete®
PRECAST ABSORPTIVE
SOUND BARRIER PANEL
STEEL POSTS

BASE PLATE TO SPREAD FOOTING (2 OF 2)

Detail 3
U.S. Customary Units

Steel Post
Embedded in Caisson
Height Zone 0' - 14'
Wind Pressure - 20 psf

Steel Post

Post Spacing PS (FT)	Wall Height H (FT)	Steel Post	Number of Welded Studs	PI (IN.)
	5.5	W8 x 31	4	53
	7.5	W8 x 31	4	53
	9.5	W8 x 31	6	57
	11.25	W8 x 31	6	57
	13.25	W8 x 40	6	57
	15.25	W10 x 49	9	57
	17.25	W10 x 60	9	57
	19.25	W10 x 77	12	61
	21.25	W10 x 100	12	61
	23.25	W12 x 120	12	61
	25.25	W12 x 120	15	65
12.0	27.25	W12 x 130	15	65
	5.25	W8 x 31	4	53
	7.25	W8 x 31	4	53
	9.25	W8 x 31	4	53
	11.25	W8 x 35	6	57
	13.25	W10 x 49	9	57
	15.25	W10 x 54	9	57
	17.25	W10 x 77	12	61
	19.25	W10 x 100	12	61
	21.25	W12 x 120	12	61
	23.25	W12 x 130	15	65
	25.25	W12 x 152	18	69
16.0	27.25	W12 x 170	18	69
	5.25	W8 x 31	4	53
	7.25	W8 x 31	4	53
	9.25	W8 x 31	6	57
	11.25	W8 x 40	8	61
	13.25	W10 x 49	9	57
	15.25	W10 x 60	12	61
	17.25	W10 x 100	12	61
	19.25	W12 x 120	15	65
	21.25	W12 x 120	15	65
	23.25	W12 x 152	18	69
20.0	25.25	W12 x 170	21	73

Detail 3
U.S. Customary Units

Steel Post
Embedded in Caisson
Height Zone Over 14'
Wind Pressure - 28 psf

Steel Post

Post Spacing PS (FT)	Wall Height H (FT)	Steel Post	Number of Welded Studs	PI (IN.)
	5.5	W8 x 31	4	53
	7.5	W8 x 31	4	53
	9.5	W8 x 31	6	57
	11.25	W8 x 40	6	57
	13.25	W10 x 49	9	57
	15.25	W10 x 60	12	61
	17.25	W10 x 77	12	61
	19.25	W10 x 100	15	65
	21.25	W12 x 120	15	65
	23.25	W12 x 120	15	65
	25.25	W12 x 152	18	69
12.0	27.25	W12 x 190	21	73
	5.5	W8 x 31	4	53
	7.5	W8 x 31	4	53
	9.5	W8 x 31	6	57
	11.25	W8 x 40	8	61
	13.25	W10 x 54	9	57
	15.25	W10 x 77	12	61
	17.25	W10 x 100	15	65
	19.25	W12 x 120	15	65
	21.25	W12 x 120	18	69
16.0	23.25	W12 x 152	21	73
	5.5	W8 x 31	4	53
	7.5	W8 x 31	6	57
	9.5	W8 x 35	8	61
	11.25	W10 x 49	9	57
	13.25	W10 x 60	12	61
	15.25	W10 x 100	15	65
	17.25	W12 x 120	15	65
	19.25	W12 x 130	18	69
20.0	21.25	W12 x 170	21	73

Detail 3
Metric Units

Steel Post
Embedded in Caisson
Height Zone 0 - 4267
Wind Pressure - 0.96 kPa

Steel Post

Post Spacing PS (mm)	Wall Height H (mm)	Steel Post	Number of Welded Studs	PI (mm)
	1670	W200 x 46	4	1350
	2290	W200 x 46	4	1350
	2890	W200 x 46	4	1450
	3429	W200 x 46	6	1450
	4000	W200 x 71	6	1450
	4600	W250 x 73	9	1450
	5258	W250 x 89	9	1450
	5867	W250 x 115	12	1550
	6477	W310 x 140	12	1550
	7087	W310 x 179	12	1550
	7696	W310 x 179	15	1650
3658	8305	W310 x 202	15	1650
	1670	W200 x 46	4	1350
	2290	W200 x 46	4	1350
	2890	W200 x 46	6	1450
	3429	W200 x 71	6	1450
	4000	W250 x 80	9	1450
	4600	W250 x 89	9	1450
	5258	W250 x 115	12	1550
	5867	W310 x 179	15	1650
	6477	W310 x 179	15	1650
	7087	W310 x 179	15	1650
	7696	W310 x 202	18	1750
4877	8305	W310 x 253	18	1750
	1670	W200 x 46	4	1350
	2290	W200 x 46	4	1350
	2890	W200 x 46	6	1450
	3429	W200 x 71	6	1450
	4000	W250 x 73	9	1450
	4600	W250 x 89	9	1450
	5258	W250 x 115	12	1550
	5867	W310 x 179	15	1650
	6477	W310 x 179	15	1650
	7087	W310 x 202	18	1750
6096	7696	W310 x 253	21	1850

Detail 3
Metric Units

Steel Post
Embedded in Caisson
Height Zone Over 4267
Wind Pressure - 1.34 kPa

Steel Post

Post Spacing PS (mm)	Wall Height H (mm)	Steel Post	Number of Welded Studs	PI (mm)
	1670	W200 x 46	4	1350
	2290	W200 x 46	4	1350
	2890	W200 x 46	6	1450
	3429	W200 x 59	6	1450
	4039	W250 x 73	9	1450
	4648	W250 x 89	9	1450
	5258	W250 x 115	12	1550
	5867	W250 x 149	15	1650
	6477	W310 x 179	15	1650
	7087	W310 x 179	15	1650
	7696	W310 x 226	18	1750
3658	8305	W310 x 283	21	1850
	1670	W200 x 46	4	1350
	2290	W200 x 46	4	1350
	2890	W200 x 46	6	1450
	3429	W200 x 71	6	1450
	4039	W250 x 80	9	1450
	4648	W250 x 115	12	1550
	5258	W250 x 149	15	1650
	5867	W310 x 179	15	1650
	6477	W310 x 179	18	1750
4877	7087	W310 x 226	21	1850
	1670	W200 x 46	4	1350
	2290	W200 x 46	6	1450
	2890	W200 x 59	8	1550
	3429	W250 x 73	9	1450
	4039	W250 x 101	12	1550
	4648	W250 x 131	15	1650
	5258	W310 x 179	15	1650
	5867	W310 x 202	18	1750
6096	6477	W310 x 253	21	1850

MARK	DESCRIPTION	BY	CHK'D.	RECM'D.	DATE

REVISIONS

OCT. 15, 2008

PENNDOT DRAWING #2000-335 PE

I hereby certify that all assumptions made in designing these sound barrier wall panels have been validated either through construction details or special notes and information to the fabricator, Erector and Contractor.

FADDIS CONCRETE PRODUCTS
3515 KING'S HIGHWAY, DOWNINGTOWN, PA 19335

AcoustaCrete®
PRECAST ABSORPTIVE
SOUND BARRIER PANEL
STEEL POSTS

EMBEDDED IN CAISSON (1 OF 1)

NOTES:

1. FOR DETAIL 3, SEE BD-678M (SHEET 10 OF 18).
2. THESE CHARTS ARE DERIVED FROM BD-678M (SHEET 11 OF 18).
3. FOR ALL DETAILS NOT SHOWN, REFER TO BD-678M & BC-778M.

Detail 4
U.S. Customary Units

Steel Post Embedded in Spread Footing with Pedestal
Height Zone 0' - 14'
Wind Pressure = 20 psf

Steel Post					Spread Footing			
Post Spacing PS (FT.)	Wall Height H (FT.)	Steel Post	Number of Welded Studs	Post Embedment PE (IN.)	T (FT.)	L (FT.)	W (FT.)	F1 (BAR SIZE)
	5.5	W8 x 31	4	12	1.75	5.0	5.0	# 4
	7.5	W8 x 31	4	12	1.75	5.0	5.0	# 4
	9.5	W8 x 31	4	12	1.75	5.5	5.0	# 4
	11.25	W8 x 31	6	16	2.25	6.5	5.0	# 4
	13.25	W8 x 48	6	16	2.25	7.0	5.0	# 4
	15.25	W10 x 49	9	16	2.25	8.0	5.0	# 4
	17.25	W10 x 60	9	16	2.25	8.5	5.0	# 5
	19.25	W10 x 77	12	20	2.50	9.0	5.0	# 5
	21.25	W10 x 100	12	20	2.50	9.5	5.0	# 5
	23.25	W12 x 120	12	20	2.50	10.0	5.0	# 5
	25.25	W12 x 120	15	24	2.75	10.5	5.5	# 5
12.0	27.25	W12 x 136	15	24	2.75	11.0	5.5	# 6
	5.25	W8 x 31	4	12	1.75	5.0	5.0	# 4
	7.25	W8 x 31	4	12	1.75	5.5	5.0	# 4
	9.25	W8 x 31	4	12	1.75	6.5	5.0	# 4
	11.25	W8 x 35	6	16	2.25	7.0	5.0	# 4
	13.25	W10 x 49	9	16	2.25	8.0	5.0	# 4
	15.25	W10 x 54	9	16	2.25	8.5	5.0	# 5
	17.25	W10 x 77	12	20	2.50	9.0	5.0	# 5
	19.25	W10 x 100	12	20	2.50	10.0	5.0	# 5
	21.25	W12 x 120	12	20	2.50	10.0	5.5	# 6
	23.25	W12 x 120	15	24	2.75	11.0	5.5	# 6
	25.25	W12 x 152	18	28	3.25	11.0	6.0	# 6
16.0	27.25	W12 x 170	18	28	3.25	11.5	6.0	# 6
	5.25	W8 x 31	4	12	1.75	5.0	5.0	# 4
	7.25	W8 x 31	4	12	1.75	6.0	5.0	# 4
	9.25	W8 x 31	6	16	2.25	7.0	5.0	# 4
	11.25	W8 x 48	8	20	2.50	7.5	5.0	# 4
	13.25	W10 x 49	9	16	2.50	8.5	5.0	# 5
	15.25	W10 x 68	12	20	2.50	9.0	5.0	# 5
	17.25	W10 x 88	12	20	2.50	10.0	5.0	# 6
	19.25	W12 x 120	15	24	2.75	10.5	5.5	# 6
	21.25	W12 x 120	15	24	2.75	11.0	5.5	# 6
	23.25	W12 x 152	18	28	3.25	11.0	6.0	# 6
20.0	25.25	W12 x 170	21	32	3.50	12.0	6.0	# 6

Detail 4
U.S. Customary Units

Steel Post Embedded in Spread Footing with Pedestal
Height Zones Over 14'
Wind Pressure = 28 psf

Steel Post					Spread Footing			
Post Spacing PS (FT.)	Wall Height H (FT.)	Steel Post	Number of Welded Studs	Post Embedment PE (IN.)	T (FT.)	L (FT.)	W (FT.)	F1 (BAR SIZE)
	5.5	W8 x 31	4	12	1.75	5.0	5.0	# 4
	7.5	W8 x 31	4	12	1.75	6.0	5.0	# 4
	9.5	W8 x 31	6	16	2.25	7.0	5.0	# 4
	11.25	W8 x 40	6	16	2.25	8.0	5.0	# 4
	13.25	W10 x 49	9	16	2.25	9.0	5.0	# 4
	15.25	W10 x 60	9	16	2.25	9.5	5.0	# 5
	17.25	W10 x 77	12	20	2.50	10.0	5.0	# 5
	19.25	W10 x 100	15	24	2.75	10.5	5.5	# 5
	21.25	W12 x 120	15	24	2.75	11.0	5.5	# 5
	23.25	W12 x 120	15	24	2.75	11.5	6.0	# 6
	25.25	W12 x 152	18	28	3.25	12.0	6.0	# 6
12.0	27.25	W12 x 190	21	32	3.50	12.0	6.5	# 6
	5.5	W8 x 31	4	12	1.75	5.5	5.0	# 4
	7.5	W8 x 31	4	12	1.75	6.5	5.0	# 4
	9.5	W8 x 31	6	16	2.25	7.5	5.0	# 4
	11.25	W8 x 48	8	20	2.50	8.5	5.0	# 4
	13.25	W10 x 54	9	16	2.50	9.5	5.0	# 5
	15.25	W10 x 77	12	20	2.50	10.0	5.5	# 5
	17.25	W10 x 100	15	24	2.75	10.5	5.5	# 5
	19.25	W12 x 120	15	24	2.75	11.0	6.0	# 6
	21.25	W12 x 120	18	28	3.25	12.0	6.0	# 6
16.0	23.25	W12 x 152	21	32	3.50	12.0	6.5	# 6
	5.5	W8 x 31	4	12	1.75	6.0	5.0	# 4
	7.5	W8 x 31	6	16	2.25	7.0	5.0	# 4
	9.5	W8 x 35	8	20	2.50	8.5	5.0	# 4
	11.25	W10 x 49	9	16	2.50	9.0	5.0	# 5
	13.25	W10 x 68	12	20	2.50	10.0	5.0	# 5
	15.25	W10 x 88	15	24	2.75	10.5	5.5	# 6
	17.25	W12 x 120	15	24	2.75	11.5	6.0	# 6
	19.25	W12 x 136	18	28	3.25	12.0	6.0	# 6
20.0	21.25	W12 x 170	21	32	3.50	12.5	6.5	# 6

NOTES:

1. FOR DETAIL 4, SEE BD-678M (SHEET 12 OF 18).
2. THESE CHARTS ARE DERIVED FROM BD-678M (SHEET 13 OF 18).
3. FOR ALL DETAILS NOT SHOWN, REFER TO BD-678M & BC-778M.

MARK	DESCRIPTION	BY	CHK'D.	RECM'D.	DATE
REVISIONS					

OCT. 15, 2008

PENNDOT DRAWING #2000-335 PE

COMMONWEALTH OF PENNSYLVANIA
REGISTERED PROFESSIONAL
JOSEPH J. MIECZKOWSKI
ENGINEER
PE-043185-E

I hereby certify that all assumptions made in designing these sound barrier wall panels have been validated either through construction details or special notes and information to the fabricator, Erector and Contractor.

FADDIS CONCRETE PRODUCTS
3515 KING'S HIGHWAY, DOWNINGTOWN, PA 19335

AcoustaCrete®
PRECAST ABSORPTIVE
SOUND BARRIER PANEL
STEEL POSTS

EMBEDDED IN SPREAD FOOTING (1 OF 2)

Detail 4
Metric Units

Steel Post Embedded in Spread Footing with Pedestal
Height Zone 0 - 4267
Wind Pressure = 0.96 kPa

Steel Post					Spread Footing			
Post Spacing PS (mm)	Wall Height H (mm)	Steel Post	Number of Welded Studs	Post Embedment PE (mm)	T (mm)	L (mm)	W (mm)	F1 (BAR SIZE)
	1676	W200 x 46	4	300	533	1524	1524	# 13
	2286	W200 x 46	4	300	533	1524	1524	# 13
	2896	W200 x 46	4	300	533	1676	1524	# 13
	3429	W200 x 46	6	400	686	1981	1524	# 13
	4039	W200 x 71	6	400	686	2134	1524	# 13
	4648	W250 x 73	9	400	686	2438	1524	# 13
	5258	W250 x 89	9	400	686	2591	1524	# 16
	5867	W250 x 115	12	500	762	2743	1524	# 16
	6477	W250 x 149	12	500	762	2896	1524	# 16
	7087	W310 x 179	12	500	762	3048	1524	# 16
	7696	W310 x 179	15	600	838	3200	1676	# 16
3658	8306	W310 x 202	15	600	838	3353	1676	# 19
	1600	W200 x 46	4	300	533	1524	1524	# 13
	2210	W200 x 46	4	300	533	1676	1524	# 13
	2819	W200 x 46	4	300	533	1981	1524	# 13
	3429	W200 x 52	6	400	686	2134	1524	# 13
	4039	W250 x 73	9	400	686	2438	1524	# 13
	4648	W250 x 80	9	400	686	2591	1524	# 16
	5258	W250 x 115	12	500	762	2743	1524	# 16
	5867	W250 x 149	12	500	762	3048	1524	# 16
	6477	W310 x 179	12	500	762	3048	1676	# 19
	7087	W310 x 179	15	600	838	3353	1676	# 19
	7696	W310 x 226	18	700	991	3353	1829	# 19
4877	8306	W310 x 253	18	700	991	3505	1829	# 19
	1600	W200 x 46	4	300	533	1524	1524	# 13
	2210	W200 x 46	4	300	533	1829	1524	# 13
	2819	W200 x 46	6	400	686	2134	1524	# 13
	3429	W200 x 71	8	500	762	2286	1524	# 13
	4039	W250 x 73	9	400	762	2591	1524	# 16
	4648	W250 x 101	12	500	762	2743	1524	# 16
	5258	W250 x 131	12	500	762	3048	1524	# 19
	5867	W310 x 179	15	600	838	3200	1676	# 19
	6477	W310 x 179	15	600	838	3353	1676	# 19
	7087	W310 x 226	18	700	991	3353	1829	# 19
6096	7696	W310 x 253	21	800	1067	3658	1829	# 19

Detail 4
Metric Units

Steel Post Embedded in Spread Footing with Pedestal
Height Zones Over 4267
Wind Pressure = 1.34 kPa

Steel Post					Spread Footing			
Post Spacing PS (mm)	Wall Height H (mm)	Steel Post	Number of Welded Studs	Post Embedment PE (mm)	T (mm)	L (mm)	W (mm)	F1 (BAR SIZE)
	1676	W200 x 46	4	300	533	1524	1524	# 13
	2286	W200 x 46	4	300	533	1829	1524	# 13
	2896	W200 x 46	6	400	686	2134	1524	# 13
	3429	W200 x 59	6	400	686	2438	1524	# 13
	4039	W250 x 73	9	400	686	2743	1524	# 13
	4648	W250 x 89	9	400	686	2896	1524	# 16
	5258	W250 x 115	12	500	762	3048	1524	# 16
	5867	W250 x 149	15	600	838	3200	1676	# 16
	6477	W310 x 179	15	600	838	3353	1676	# 16
	7087	W310 x 179	15	600	838	3505	1829	# 19
	7696	W310 x 226	18	700	991	3658	1829	# 19
3658	8306	W310 x 283	21	800	1067	3658	1981	# 19
	1676	W200 x 46	4	300	533	1676	1524	# 13
	2286	W200 x 46	4	300	533	1981	1524	# 13
	2896	W200 x 46	6	400	686	2286	1524	# 13
	3429	W200 x 71	8	500	762	2591	1524	# 13
	4039	W250 x 80	9	400	762	2896	1524	# 16
	4648	W250 x 115	12	500	762	3048	1676	# 16
	5258	W250 x 149	15	600	838	3200	1676	# 16
	5867	W310 x 179	15	600	838	3353	1829	# 19
	6477	W310 x 179	18	700	991	3658	1829	# 19
4877	7087	W310 x 226	21	800	1067	3658	1981	# 19
	1676	W200 x 46	4	300	533	1829	1524	# 13
	2286	W200 x 46	6	300	686	2134	1524	# 13
	2896	W200 x 52	8	500	762	2591	1524	# 13
	3429	W250 x 73	9	400	762	2743	1524	# 16
	4039	W250 x 101	12	500	762	3048	1524	# 16
	4648	W250 x 131	15	600	838	3200	1676	# 19
	5258	W310 x 179	15	600	838	3505	1829	# 19
	5867	W310 x 202	18	700	991	3658	1829	# 19
6096	6477	W310 x 253	21	800	1067	3810	1981	# 19

MARK	DESCRIPTION	BY	CHK'D.	RECM'D.	DATE

REVISIONS

OCT. 15, 2008

PENNDOT DRAWING #2000-335 PE

NOTES:

1. FOR DETAIL 4, SEE BD-678M (SHEET 12 OF 18).
2. THESE CHARTS ARE DERIVED FROM BD-678M (SHEET 14 OF 18).
3. FOR ALL DETAILS NOT SHOWN, REFER TO BD-678M & BC-778M.

COMMONWEALTH OF PENNSYLVANIA
REGISTERED PROFESSIONAL
JOSEPH J. MIECZKOWSKI
ENGINEER
PE-043185-E

I hereby certify that all assumptions made in designing these sound barrier wall panels have been validated either through construction details or special notes and information to the fabricator, Erector and Contractor.

FADDIS CONCRETE PRODUCTS
3515 KING'S HIGHWAY, DOWNINGTOWN, PA 19335

AcoustaCrete®
PRECAST ABSORPTIVE
SOUND BARRIER PANEL
STEEL POSTS

EMBEDDED IN SPREAD FOOTING (2 OF 2)

Barrier Mounted Sound Barrier on Retaining Walls or Moment Slabs U.S. Customary Units

Steel Post, Base Plate, Anchor Bolt, and Anchor Plate Geometry
Wind Pressure = 37 psf

Post Spacing PS (FT.)	Wall Height H (FT.)	Steel Post	Base Plate t (IN.)	Base Plate ℓ (IN.)	Base Plate w (IN.)	Base Plate F (IN.)	Anchor Bolts D (IN.)	Anchor Plates l1 (IN.)	Anchor Plates F1 (IN.)
	5.5	W8 x 48	3/4	12 3/4	15	1 5/8	1	11 1/2	1
	7.5	W8 x 48	1	13 1/2	16	2 1/8	1 1/4	11 3/4	1 1/4
	9.5	W8 x 48	1 1/8	13 1/2	16	2 1/8	1 1/4	11 3/4	1 1/4
	11.5	W8 x 48	1 3/8	14	18	2 1/2	1 1/2	12	1 1/2
	13.5	W8 x 48	1 1/2	14 1/2	19	2 7/8	1 3/4	12 1/4	1 3/4
6.0	14.5	W8 x 48	1 5/8	14 1/2	19	2 7/8	1 3/4	12 1/4	1 3/4
	5.5	W8 x 48	3/4	13 1/2	16	2 1/8	1 1/4	11 3/4	1 1/4
	7.5	W8 x 48	1	13 1/2	16	2 1/8	1 1/4	11 3/4	1 1/4
	9.5	W8 x 48	1 1/4	14	18	2 1/2	1 1/2	12	1 1/2
	11.5	W8 x 48	1 1/2	14 1/2	19	2 7/8	1 3/4	12 1/4	1 3/4
8.0	12.5	W8 x 48	1 3/4	14 1/2	19	2 7/8	1 3/4	12 1/4	1 3/4
	5.5	W8 x 48	7/8	13 1/2	16	2 1/8	1 1/4	11 3/4	1 1/4
	7.5	W8 x 48	1 1/8	14	18	2 1/2	1 1/2	12	1 1/2
	9.5	W8 x 48	1 3/8	14	18	2 1/2	1 1/2	12	1 1/2
10.0	11.5	W8 x 48	1 3/4	14 1/2	19	2 7/8	1 3/4	12 1/4	1 3/4
	5.5	W8 x 48	7/8	13 1/2	16	2 1/8	1 1/4	11 3/4	1 1/4
	7.5	W8 x 48	1 1/4	14	18	2 1/2	1 1/2	12	1 1/2
	9.5	W8 x 48	1 1/2	14 1/2	19	2 7/8	1 3/4	12 1/4	1 3/4
12.0	10.5	W8 x 48	1 3/4	14 1/2	19	2 7/8	1 3/4	12 1/4	1 3/4

Wall Mounted Sound Barrier U.S. Customary Units

Steel Post, Base Plate, Anchor Bolt, and Anchor Plate Geometry
Wind Pressure = 37 psf

Post Spacing PS (FT.)	Wall Height H (FT.)	Steel Post	Base Plate t (IN.)	Base Plate ℓ (IN.)	Base Plate w (IN.)	Base Plate F (IN.)	Anchor Bolts D (IN.)	Anchor Bolts S (IN.)	Anchor Plates l1 (IN.)	Anchor Plates F1 (IN.)
	5.5	W8 x 48	3/4	15 1/4	15	1 5/8	1	24	14	1
	7.5	W8 x 48	7/8	16	16	2 1/8	1 1/4	30	14 1/4	1 1/4
	9.5	W8 x 48	1	16	16	2 1/8	1 1/4	30	14 1/4	1 1/4
	11.5	W8 x 48	1 1/8	16 1/2	18	2 1/2	1 1/2	33	14 1/2	1 1/2
	13.5	W8 x 48	1 3/8	16 1/2	18	2 1/2	1 1/2	33	14 1/2	1 1/2
	15.5	W10 x 68	1 5/8	17	21	2 7/8	1 3/4	39	14 3/4	1 3/4
	17.5	W10 x 68	1 3/4	17 1/2	22	3 1/4	2	45	14 3/4	1 7/8
6.0	19.5	W10 x 88	2	17 1/2	22	3 1/4	2	45	14 3/4	1 7/8
	5.5	W8 x 48	3/4	15 1/4	15	1 5/8	1	24	14	1
	7.5	W8 x 48	7/8	16	16	2 1/8	1 1/4	30	14 1/4	1 1/4
	9.5	W8 x 48	1 1/8	16 1/2	18	2 1/2	1 1/2	33	14 1/2	1 1/2
	11.5	W8 x 48	1 3/8	16 1/2	18	2 1/2	1 1/2	33	14 1/2	1 1/2
	13.5	W8 x 48	1 5/8	17	19	2 7/8	1 3/4	39	14 3/4	1 3/4
	15.5	W10 x 68	1 7/8	17 1/2	22	3 1/4	2	45	14 3/4	1 7/8
8.0	16.5	W10 x 68	2	17 1/2	22	3 1/4	2	45	14 3/4	1 7/8
	5.5	W8 x 48	3/4	16	16	2 1/8	1 1/4	30	14 1/4	1 1/4
	7.5	W8 x 48	1	16	16	2 1/8	1 1/4	30	14 1/4	1 1/4
	9.5	W8 x 48	1 1/4	16 1/2	18	2 1/2	1 1/2	33	14 1/2	1 1/2
	11.5	W8 x 48	1 1/2	17	19	2 7/8	1 3/4	39	14 3/4	1 3/4
	13.5	W10 x 68	1 3/4	17 1/2	22	3 1/4	2	45	14 3/4	1 7/8
10.0	14.5	W10 x 68	2	17 1/2	22	3 1/4	2	45	14 3/4	1 7/8
	5.5	W8 x 48	7/8	16	16	2 1/8	1 1/4	30	14 1/4	1 1/4
	7.5	W8 x 48	1 1/8	16 1/2	18	2 1/2	1 1/2	33	14 1/2	1 1/2
	9.5	W8 x 48	1 3/8	17	19	2 7/8	1 3/4	39	14 3/4	1 3/4
	11.5	W8 x 48	1 5/8	17	22	2 7/8	1 3/4	39	14 3/4	1 3/4
12.0	13.5	W10 x 68	1 7/8	17 1/2	22	3 1/4	2	45	14 3/4	1 7/8

Barrier Mounted Sound Barrier on Bridges U.S. Customary Units

Steel Post, Base Plate, Anchor Bolt, and Anchor Plate Geometry
Wind Pressure = 37 psf

Post Spacing PS (FT.)	Wall Height H (FT.)	Steel Post	Base Plate t (IN.)	Base Plate ℓ (IN.)	Base Plate w (IN.)	Base Plate F (IN.)	Anchor Bolts D (IN.)	Anchor Plates l1 (IN.)	Anchor Plates F1 (IN.)
	5.5	W8 x 48	1	13 1/2	16	2 1/8	1 1/4	11 3/4	1 1/4
	7.5	W8 x 48	1 1/8	14	18	2 1/2	1 1/2	12	1 1/2
6.0	9.5	W8 x 48	1 3/8	14	18	2 1/2	1 1/2	12	1 1/2
	5.5	W8 x 48	1	13 1/2	16	2 1/8	1 1/4	11 3/4	1 1/4
	7.5	W8 x 48	1 1/4	14	18	2 1/2	1 1/2	12	1 1/2
8.0	9.5	W8 x 48	1 5/8	14 1/2	19	2 7/8	1 3/4	12 1/4	1 3/4
	5.5	W8 x 48	1 1/8	14	18	2 1/2	1 1/2	12	1 1/2
	7.5	W8 x 48	1 1/2	14 1/2	19	2 7/8	1 3/4	12 1/4	1 3/4
10.0	8.5	W8 x 48	1 3/4	14 1/2	19	2 7/8	1 3/4	12 1/4	1 3/4
	5.5	W8 x 48	1 1/8	14	18	2 1/2	1 1/2	12	1 1/2
12.0	7.5	W8 x 48	1 1/2	14 1/2	19	2 7/8	1 3/4	12 1/4	1 3/4

NOTES:

1. THESE CHARTS ARE DERIVED FROM BD-679M (SHEETS 7, 8, & 9 OF 11).
2. FOR ALL DETAILS NOT SHOWN, REFER TO BD-679M & BC-779M.

MARK	DESCRIPTION	BY	CHK'D.	RECM'D.	DATE

REVISIONS

OCT. 15, 2008

PENNDOT DRAWING #2000-335 PE

COMMONWEALTH OF PENNSYLVANIA
REGISTERED PROFESSIONAL ENGINEER
JOSEPH J. MIECZKOWSKI
PE-043189-E

I hereby certify that all assumptions made in designing these sound barrier wall panels have been validated either through construction details or special notes and information to the fabricator, Erector and Contractor.

FADDIS CONCRETE PRODUCTS
3515 KING'S HIGHWAY, DOWNINGTOWN, PA 19335

AcoustaCrete®
PRECAST ABSORPTIVE SOUND BARRIER PANEL STEEL POSTS

STRUCTURE MOUNTED (1 OF 2)

Barrier Mounted Sound Barrier on Retaining Walls or Moment Slabs Metric Units

Steel Post, Base Plate, Anchor Bolt, and Anchor Plate Geometry
Wind Pressure = 1.77 kPa

Post Spacing PS (mm)	Wall Height H (mm)	Steel Post	Base Plate t (mm)	Base Plate i (mm)	Base Plate w (mm)	Base Plate F (mm)	Anchor Bolts D (mm)	Anchor Plates l1 (mm)	Anchor Plates F1 (mm)
	1676	W200 x 71	19	324	381	41	25.4	292	25
	2286	W200 x 71	25	343	406	54	31.8	298	32
	2896	W200 x 71	29	343	406	54	31.8	298	32
	3505	W200 x 71	35	356	457	64	38.1	305	38
	4115	W200 x 71	38	368	483	73	44.5	311	44
1829	4420	W200 x 71	41	368	483	73	44.5	311	44
	1676	W200 x 71	19	343	406	54	31.8	298	32
	2286	W200 x 71	25	343	406	54	31.8	298	32
	2896	W200 x 71	32	356	457	64	38.1	305	38
	3505	W200 x 71	38	368	483	73	44.5	311	44
2438	3810	W200 x 71	44	368	483	73	44.5	311	44
	1676	W200 x 71	22	343	406	54	31.8	298	32
	2286	W200 x 71	29	356	457	64	38.1	305	38
	2896	W200 x 71	35	356	457	64	38.1	305	38
3048	3505	W200 x 71	44	368	483	73	44.5	311	44
	1676	W200 x 71	22	343	406	54	31.8	298	32
	2286	W200 x 71	32	356	457	64	38.1	305	38
	2896	W200 x 71	38	368	483	73	44.5	311	44
3658	3200	W200 x 71	44	368	483	73	44.5	311	44

Wall Mounted Sound Barrier Metric Units

Steel Post, Base Plate, Anchor Bolt, and Anchor Plate Geometry
Wind Pressure = 1.77 kPa

Post Spacing PS (mm)	Wall Height H (mm)	Steel Post	Base Plate t (mm)	Base Plate i (mm)	Base Plate w (mm)	Base Plate F (mm)	Anchor Bolts D (mm)	Anchor Bolts S (mm)	Anchor Plates l1 (mm)	Anchor Plates F1 (mm)
	1676	W200 x 71	19	387	381	41	25.4	610	356	25
	2286	W200 x 71	22	406	406	54	31.8	762	32	32
	2896	W200 x 71	25	406	406	54	31.8	762	362	32
	3505	W200 x 71	29	419	457	64	38.1	838	368	38
	4115	W200 x 71	35	419	457	64	38.1	838	368	38
	4724	W250 x 101	41	432	533	73	44.5	991	375	44
	5334	W250 x 101	44	445	559	83	50.8	1143	375	48
1829	5944	W250 x 131	51	445	559	83	50.8	1143	375	48
	1676	W200 x 71	19	387	381	41	25.4	610	356	25
	2286	W200 x 71	22	406	406	54	31.8	762	362	32
	2896	W200 x 71	29	419	457	64	38.1	838	368	38
	3505	W200 x 71	35	419	457	64	38.1	838	368	38
	4115	W200 x 71	41	432	483	73	44.5	991	375	44
	4724	W250 x 101	48	445	559	83	50.8	1143	375	48
2438	5029	W250 x 101	51	445	559	83	50.8	1143	375	48
	1676	W200 x 71	19	406	406	54	31.8	762	362	32
	2286	W200 x 71	25	406	406	54	31.8	762	362	32
	2896	W200 x 71	32	419	457	64	38.1	838	368	38
	3505	W200 x 71	38	432	483	73	44.5	991	375	44
	4115	W250 x 101	44	445	559	83	50.8	1143	375	48
3048	4420	W250 x 101	51	445	559	83	50.8	1143	375	48
	1676	W200 x 71	22	406	406	54	31.8	762	362	32
	2286	W200 x 71	29	419	457	64	38.1	838	368	38
	2896	W200 x 71	35	432	483	73	44.5	991	375	44
	3505	W200 x 71	41	432	483	73	44.5	991	375	44
3658	4115	W250 x 101	48	445	559	83	50.8	1143	375	48

Barrier Mounted Sound Barrier on Bridges Metric Units

Steel Post, Base Plate, Anchor Bolt, and Anchor Plate Geometry
Wind Pressure = 1.77 kPa

Post Spacing PS (mm)	Wall Height H (mm)	Steel Post	Base Plate t (mm)	Base Plate i (mm)	Base Plate w (mm)	Base Plate F (mm)	Anchor Bolts D (mm)	Anchor Plates l1 (mm)	Anchor Plates F1 (mm)
	1676	W200 x 71	25	343	406	54	31.8	298	32
	2286	W200 x 71	29	356	457	64	38.1	305	38
1829	2896	W200 x 71	35	356	457	64	38.1	305	38
	1676	W200 x 71	25	343	406	54	31.8	298	32
	2286	W200 x 71	32	356	457	64	38.1	305	38
2438	2896	W200 x 71	41	368	483	73	44.5	311	44
	1676	W200 x 71	29	356	457	64	38.1	305	38
	2286	W200 x 71	38	368	483	73	44.5	311	44
3048	2591	W200 x 71	44	368	483	73	44.5	311	44
	1676	W200 x 71	29	356	457	64	38.1	305	38
3658	2286	W200 x 71	38	368	483	73	44.5	311	44

NOTES:

1. THESE CHARTS ARE DERIVED FROM BD-679M (SHEETS 7, 8, & 9 OF 11).
2. FOR ALL DETAILS NOT SHOWN, REFER TO BD-679M & BC-779M.

MARK	DESCRIPTION	BY	CHK'D.	RECM'D.	DATE

REVISIONS

OCT. 15, 2008

PENNDOT DRAWING #2000-335 PE

COMMONWEALTH OF PENNSYLVANIA
REGISTERED PROFESSIONAL ENGINEER
JOSEPH J. MIECZKOWSKI
PE-043189-E

I hereby certify that all assumptions made in designing these sound barrier wall panels have been validated either through construction details or special notes and information to the fabricator, Erector and Contractor.

FADDIS CONCRETE PRODUCTS
3515 KING'S HIGHWAY, DOWNINGTOWN, PA 19335

AcoustaCrete®
PRECAST ABSORPTIVE SOUND BARRIER PANEL STEEL POSTS

STRUCTURE MOUNTED (2 OF 2)

Product:

Centria
Versapanel Sound Barrier
Special Provision and Standard Drawing
PennDOT Drawing PE #2006-206
Item 9000-7026

Approval Date: **Initiated By SOL:**

September 7, 2007

Application/Use:

The Versapanel Sound Barrier, a coated steel panel sound barrier system manufactured by Centria, 1005 Beaver Grade Road, Moon Township, PA 15108 (Telephone No. 412-299-8101), have been approved for use as an "**alternate"** or "**as-designed"** Ground Mounted Sound Barrier. This is a reflective sound barrier.

Specifications:

Attached is a copy of the Design/Material/Construction Specifications specified on the standard detail drawings PennDOT Drawing PE #2006-206, dated February 17, 2009 for post and panel sound barrier for your use.

Standard Drawing:

Attached is a copy of PennDOT Drawing PE #2006-206, dated February 17, 2009 of Versapanel Sound Barrier details for your use.

Comment:

On those projects permitting the use of this system as an alternate, a special provision should be included in the proposal to indicate that the "Versapanel Sound Barrier" as an alternate is allowed.

The contractor will be required to revise the pertinent contract drawings as per DM-4M, PP 1.10 to show the usage of "Versapanel Sound Barrier" and will also be required to reimburse the Department a fee of $1000 per design for the review and approval of the revision. This should be specified in the contract's Special Provision.

A) GENERAL NOTES

1) All Dimensions are in millimeters unless noted otherwise. U.S. Customary units in ( ) parenthesis.
2) All "Design" metric units indicated are soft converted from U.S. Customary units.
3) All dimensions are horizontal, except as noted.
4) Dimensions shown are for a normal temperature of 20° C (68° F)
5) Access door details are not included in the pre-appoved shop drawings. Access Door details will require project specific shop drawings and must comply with BC-776M.

B) DESIGN

1) DESIGN SPECIFICATIONS:
- PENNDOT Design manual, part 4, structures.
-1989 AASHTO "guide specifications for structural design of sound barriers" including the 1992 and 1994 interims.
-1992 AASHTO "Standard specifications for highway bridges", 15th edition including the 1993 and 1994 interims.
- 2001 AASHTO "Standard specifications for structural supports for highway signs, luminaries and traffic signals", 4th edition, including the 2002 and 2003 interims.
- Design is in accordance with the working stress design method. (No increase in allowable unit stresses are permitted except for group III loadings which permits a 33% overstress.)

2) DESIGN LOADS:
- Wind Load:
-The wind load includes a gust factor of 1.3 and a drag factor of 1.2 and is based on a maximum 50-year mean wind velocity at 9144 mm (30'-0") above the ground surface of 130 km/hr (80 mph).

-Ground mounted sound barrier walls:
Metric Units:
Height Zone: 0 mm to 4267 mm= 0.96 kPa
Height Zone: over 4267 mm = 1.34 kPa
U.S. Customary Units:
Height Zone: 0' to 14'-0" = 20 PSF
Height Zone: Over 14'-0" = 28 PSF
- Ice Load: 0.14 kPa (3 PSF) applied to one side of panel and post.

3) Secure district bridge engineers approval before incorporating CENTRIA sound barrier panel in any project.

4) CENTRIA will provide all forces to the post, base plate and anchor bolts to ensure the barrier wall will perform as designed.

5) Design the foundations, base plates, steel post and anchor bolts in accordance with PA. Department of Transportation current Bridge Standard BD-678M. Size all post based on 4877mm (16'-0") post spacings.

6) CENTRIA assumes full responsibility for the engineering theory and design calculations of the barrier panel to ensure that all design assumptions are validated in accordance with the contract documents.

7) CENTRIA is to prepare P.E. sealed design calculations and drawings for the ground mounted Versapanel Sound Barrier walls in accordance with the guidelines specified herein.

C) MATERIALS

1) Cast- in- place Concrete:
- Provide class A cement concrete in the cast -in-place footings, pedestals and caissons
F' c = 21 MPa (3,000 PSI)
- Density of concrete = 2400 kg/m3 (Unit weight of concrete = 150 lb. / cu.ft.)

2) Reinforcement Steel:
- Provide grade 420 (grade 60) deformed reinforcing bars that meet the requirements of ASTM A615M (A615), ASTM A996M (A996) or ASTM A706M (A706). Do not weld reinforcing bars unless specified. Do not use rail steel A996M (A996) reinforcement bars in footings, caissons, or where bending or welding of reinforcement bars is indicated.
Fs = 160 MPa (24,000 PSI)
-All Reinforcement steel bars shown are soft converted metric sizes.
-Provide uncoated reinforcement in the footings and caissons.
-Provide uncoated, epoxy coated, or galvanized reinforcement in the raised panel seats and pedestals as specified on the contract drawings.
-Provide minimum lap and embedment length for reinforcing bars of 30 diameters or in accordance with the current AASHTO specifications as modified by the design manual, part 4, whichever is greater.
-Mechanical connections, which meet the requirements of Publication 408, Section 1002 may be used upon acceptance from the engineer.

3) Fabricated Structural Steel:
-The fabricated structural steel to be supplied by a bulletin 15 approved source.
-Provide structural steel conforming to AASHTO M270M (M270) grade 250 (36) [ASTM A709M (A709), grade 250 (36) unless otherwise noted.
- Provide structural steel tubing conforming to ASTM A53M (A53), Grade B, Type E for the steel angled and corner posts. [Fy = 240 MPa (35 KSI)]
- Weathering steel (A 588) is not permitted
- Provide minimum weld size of 10 mm (3/8")
- Non Destructive testing is required for steel post to base plate welds. Provide testing in accordance with AASH/ AWS/ D1.5 M/ D1.5 2002 for main member.
- Galvanize and paint steel posts, plates and hardware in accordance with Publication on 408, Section 1105.02 (a) and 1060.2 (b)
- Clean and prepare galvanized surfaces for painting in accordance with Publication 408, Section 1060.3(b) 4.
- Repair damaged galvanizing in accordance with Publication 408, Section 1105.02 (a)2.

4) Welded studs:
- Provide 22.2 mm x 100 mm (7/8" x 4") studs conforming to ASTM A108 in accordance with Publication 408. Section 1105.02(a).

5) Anchor bolts, nuts, and washers:
- Provide anchor bolts conforming to ASTM F1554, Grade 250 (36) in accordance with Publication 408, Section 1105.02(c) 3.
- Provide heavy hex nuts conforming to ASTM A563M (A563A) in accordance with Publication 408, Section 1105.02 (c) 3a.
-Provide oversize washers conforming to AASHTO M27M (M270) , grade 250 (36) [ASTM A709M (A709), grade 250 (36)].
- Provide lock washers and flat washers conforming to ASTM F436M (F436) in accordance with Publication 408, Section 1105.02 (c) 3b.
-Galvanize all anchor bolts and hardware in accordance with Publication 408, Section 1105.02 (s) .

6) All materials shall conform to the applicable Sections of the Pennsylvania Department of Transportation Publication 408 - Section 1086 and Publication 15M-Section 3.6.4.

7) Panels
- Exterior skins shall be ASTM A 653, grade 37 G90 galvanized steel, non directionally embossed and flat in .76 mm (.0299 inches) - 22 gage.
- Panel side joint sealant shall be factory applied JS773 butyl.
- Panel core shall be Baytherm 871- Urethane modified isocyanurate core and shall be factory poured in place between face and liner to fill all voids in the panel and have the following minimum physical properties:

Density- 40 kg/m³ (2.5 PCF)
Shear- 138 kpa (20 psi)
Compression-138 kps (20 psi)
Tensile- 138 kpa (20 psi)

- Finish -Both Sides - Selected from manufactures standard colors
a) Bulletin 15 approved coating system by PPG Protective and Marine Coating - Alexander, Arkansas
Amercoat 385 DFT-(4 mil min/6 mil max)
Amercoat 450HS DFT-(2 mil min/3 mil max)
b) Applied by bulletin 15 approved coater
Pittsburgh Coating Corportation, Ambridge PA

1) Erection. Install sound barrier wall as indicated, as show on approved shop drawings, and in accordance with the manufacturer's recommendations.
Secure panels to provide a vibration free installation, and provide joints and connections with no visible openings to decrease sound attenuation.

2) Tolerances

a) Fabrication Tolerances

a-1) 1.b. Structural Steel Posts and Base Plate ASTM A6

a-2) 1.c All others

PANELS	(mm)	POSTS	(mm)
Height:	± 6	Length:	± 13
Length:	± 13	Width:	± 6
Thickness:	± 6	Depth:	± 6
Out of Flatness:		Slot Width:	± 3
- Lengths to 2400 mm:	3	Slot Depth:	± 3
- Lengths over 2400 mm:	6	Out of Flatness:	
		- Lengths to 2400 mm:	3
		-Lengths over 2400 mm:	6

PANELS	(inch)	POSTS	(inch)
Height:	± 1/4	Length:	± 1/2
Length:	± 1/2	Width:	± 1/4
Thickness:	± 1/4	Depth:	± 1/4
Out of Flatness:		Slot Width:	± 1/8
- Lengths to 8 Feet:	1/8	Slot Depth:	± 1/8
- Lengths over 8 Feet	1/4	Out of Flatness:	
		- Lengths to 8 Feet:	1/8
		-Lengths over 8 Feet:	1/4

b) Erection Tolerances.

- Vertical alignment for walls and posts to be 6 mm (1/4- inch) for wall heights to 3100 mm (10 feet), 12 mm (1/2-inch) for wall heights to 6100 mm (20 feet), and 20 mm (3/4-inch) for wall heights greater than 6100 mm (20 feet).

- Horizontal alignment to be as indicated.

-Post to be set within ± 12 mm (± ½- inch) of the indicated location.

3) Construction Specifications and Workmanship:

-Provide materials and perform work in accordance with the current version of the Pennslyvania Department of Transportation Publication 408. AASHTO / AWS / D 1.5M / D 1.5 2002 - Bridge Welding Code and the contract special provisions. (Use AWS / D1.1 / D 1.1M 2002 for welding not covered in AASHTO / AWS/ D1.5M / D1.5M 2002.)

4) Wall heights must equal or exceed acoustical profile.

5) Install anchor bolts, post and panels truly vertical.

6) Spread Footings:
- Construct embankments and / or cut existing grade to the top of footing evaluations.
- Excavate for footing construction.
- Construct footing.
- Spread footings may be ordered by the engineer to be at any elevation or any dimensions necessary to provide a proper foundation. If spread footings are adjusted, panel heights and post designs will need to be adjusted.
- Use class C cement concrete or #2A coarse aggregate below spread footing when specified or directed.

7) Caissons:
-Construct embankments and/or cut existing grade to the top of caisson elevations prior to construction of caissons.
- The contractor is responsible for maintaining the drilled opening intact and for maintaining the stability of the ground cut slope or filled embankment during drilling and installation of caissons.
- Temporary casing may be required during caisson construction in order to maintain an open shaft. If casing is used, maintain concrete to prevent caved material from contaminating the concrete.
- If groundwater flow enters the caisson excavation during construction, place concrete by Tremie methods to abcve the ground water elevation in one continuous operation. Fill remainder of caisson with a class A concrete. Place epoxy bonding compound between pours, as required.

8) Coordinate, locate, and conduct all work related to public and private utilities in accordance with publication 408, section 105.06 and 107.12, and the contract special provisions.

9) For additional information refer to BC-776M.

10) If needed detail is not found in the sound barrier standards or on the contract drawings a special submission requesting approval for, specific details must be made to the chief bridge engineer.

TABLE 1- POST SIZING
4877 mm (16') maximum spacing for .96 kPa (20 PSF) loads
4267 mm (14') maximum spacing for 1.34 kPa (28 PSF) loads

WALL HEIGHT	POST SPACING 4877 mm (16')	POST SPACING 4267 mm (14')
1829 mm (6')	W 200x46	W 200x46
	(W 8x31)	(W 8x31)
2438 mm (8')	W 200x46	W 200x46
	(W 8x31)	(W 8x31)
3048 mm (10')	W 200x46	W 200x46
	(W 8x31)	(W 8x31)
3658 mm (12')	W 200x52	W 200x71
	(W 8x35)	(W 8x48)
4267 mm (14')	W250x73	W 250x80
	(W 10x49)	(W 10x54)
4877 mm (16')	x	W 250x115
	x	(W 10x77)
5846 mm (18')	x	W 250x149
	x	(W 10x100)
6096 mm (20')	x	W 310x179
	x	(W 12x120)
6706 mm (22')	x	W 310 x 179
	x	(W12 x 120)
7315 mm (24')	x	W 310x226
	x	(W 12x152)

Notes: Maximum wall height for 4877 mm (16'-0") post spacing is 4267 mm (14'-0")
This accommodates maximum load of .96 kPa (20 PSF)

Parts List
1) Panels
Coated steel 4" Versapanel sound barrier panels with
a)JS773 Factory applied butyl sealant
b) 22 GA G90 steel face
c) 22 GA G90 steel liner
d) Urethane modified isocyanurate core
e) Module width 3'-0"
f) Length as required
2) Flashing
a) 22 GA top cap (painted to match panel)
b) 22 GA base cap (painted to match panel)
3) Spacers
a) SP1 - 18 GA x 3'-0" spacer element (painted to match panel)
b) SP2 - 18 GA x 3'-0" spacer element (painted to match panel)
c) SP3 - 18 GA x 3'-0" spacer element (painted to match panel)
d) SP4 - 18 GA x 3'-0" spacer element (painted to match panel)
4) Sealant
a) Dynatrol polyurethane sealant with $\frac{1}{2}$" Ø close cell backer rod
b) V776 foam tape ($\frac{3}{16}$" x 1" wide)
5) Fasteners
a) $\frac{3}{16}$" Ø Painted Bulbtite rivets (#RV6604-6-4W)
b) $\frac{1}{4}$" x $1\frac{1}{4}$" zinc plated carbon steel wedge bolts

CENTRIA

DWN. BY: trs	CHK. BY:
DATE: 1/29/07	DATE:

PENNSYLVANIA DEPARTMENT OF TRANSPORTATION RECOMMENDED
Thomas P. Macioce
CHIEF BRIDGE ENGINEER

CENTRIA COATED STEEL SOUND BARRIER SYSTEM
A.K.A. VERSAPANEL SOUND BARRIER

SHEET 1 OF 4

COMMONWEALTH OF PENNSYLVANIA REGISTERED PROFESSIONAL ENGINEER CHUNBO SHIM NO. 036906
8-27-07

Q:/TSOBEHART/HIGHWAY SOUND BARRIER SYSTEM/12907/P400_ISO.DWG

ISSUE# 2	DATE: 8/1/07
CONTRACT #	FEB 17 2009 PE#2006-206
DWG. #	GN1

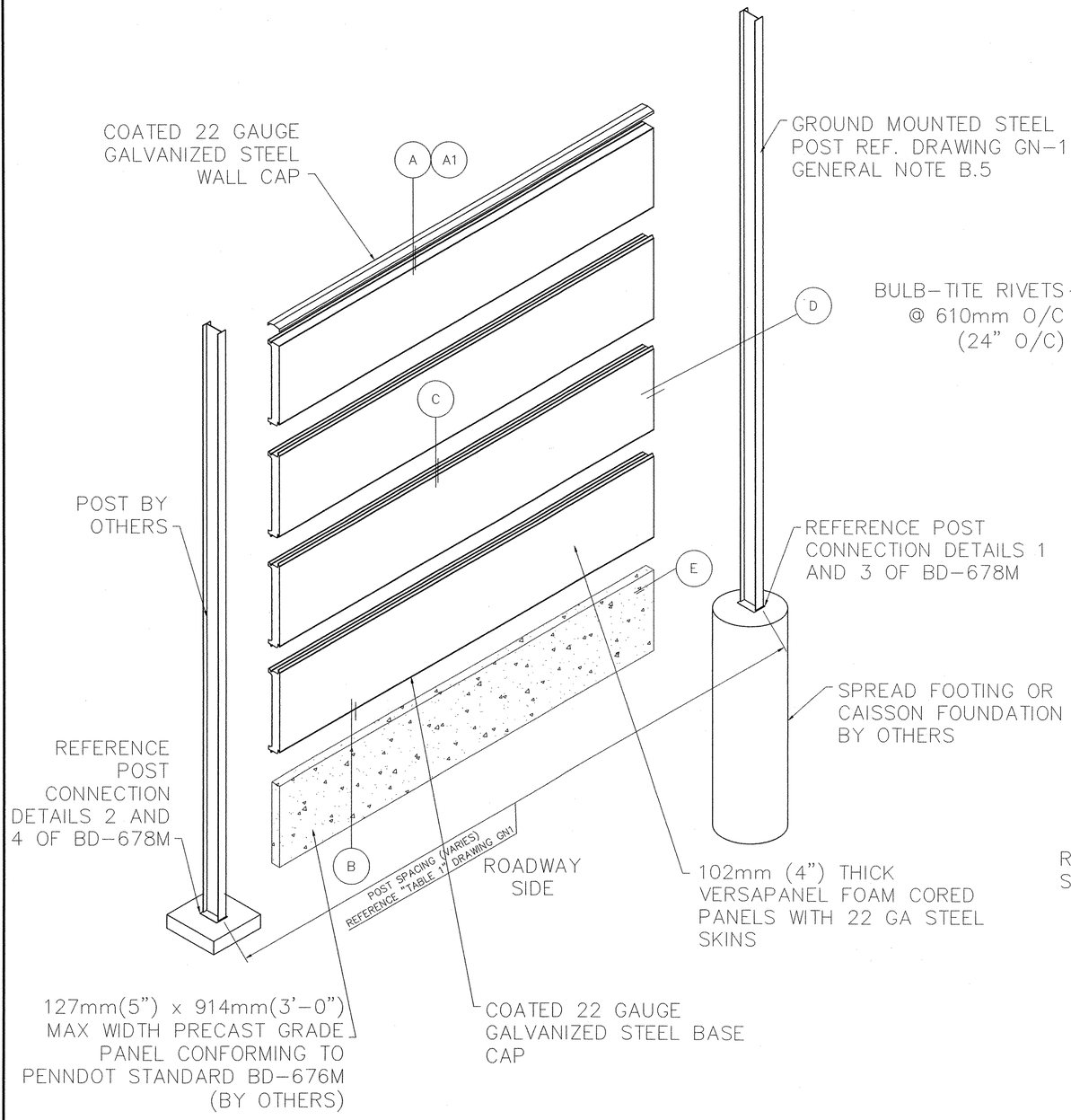

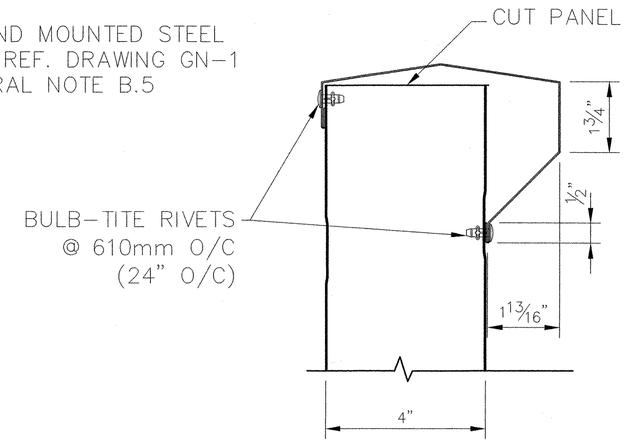

A1 BEVEL CUT PANEL CONDITION

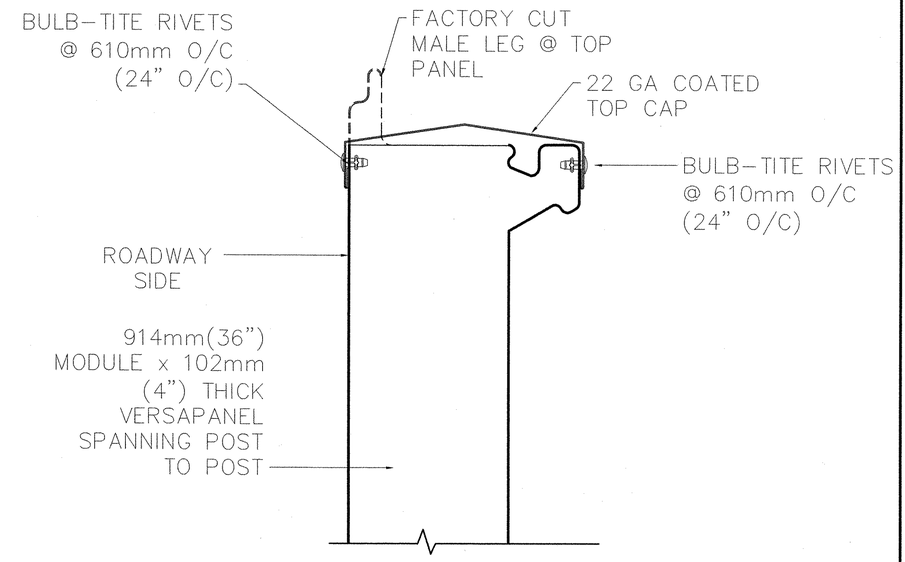

A DETAIL

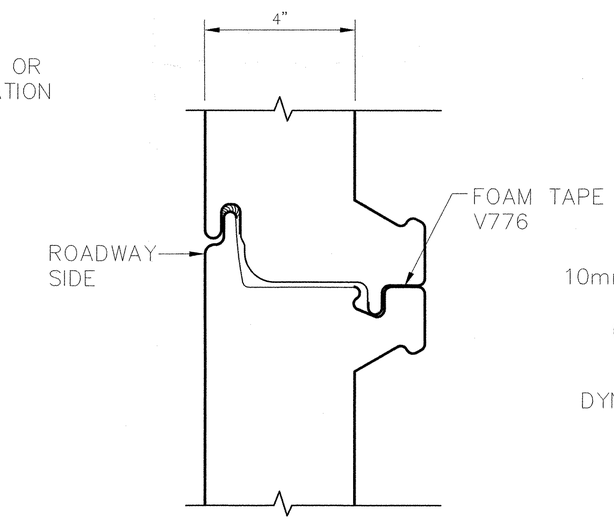

C DETAIL

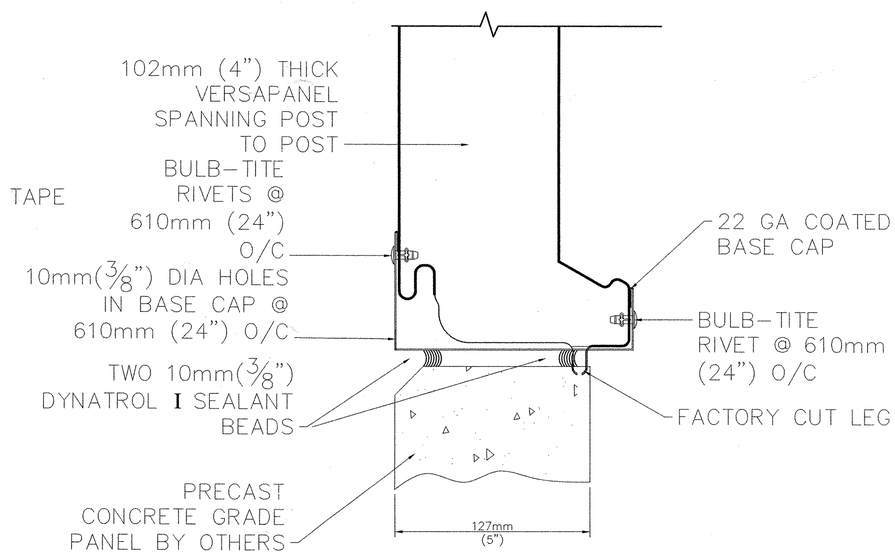

B DETAIL

PANEL WEIGHT: 3.78 #/FT² STEEL SKINS

Q:/TSOBEHART/HIGHWAY SOUND BARRIER SYSTEM/VP400_ISO.DWG

CENTRIA

DWN. BY: trs	CHK. BY:
DATE: 7/5/07	DATE:

CENTRIA COATED STEEL SOUND BARRIER SYSTEM
A.K.A. VERSAPANEL SOUND BARRIER

PENNDOT PRODUCT EVALUATION DRAWING

SHEET 2 OF 4

COMMONWEALTH OF PENNSYLVANIA REGISTERED PROFESSIONAL ENGINEER CHUNBO SHIM NO. 032898-E 8-27-07

ISSUE# 2	DATE: 8/15/07
CONTRACT #	FEB 17 2009 PE#2006-206
DWG. #	E1

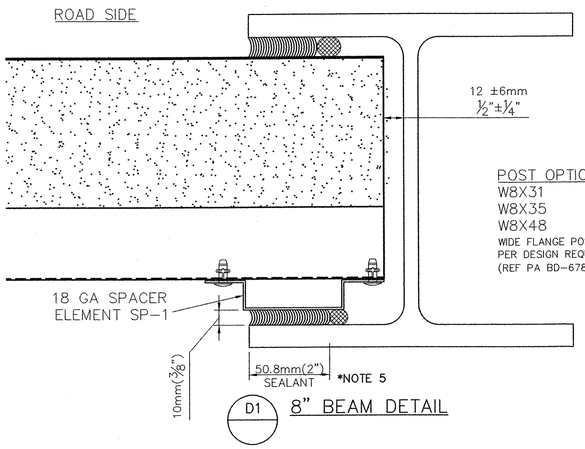

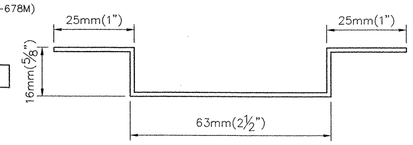

SP-1
PAINTED 18 GA. SPACER ELEMENT X 3'-0" LONG

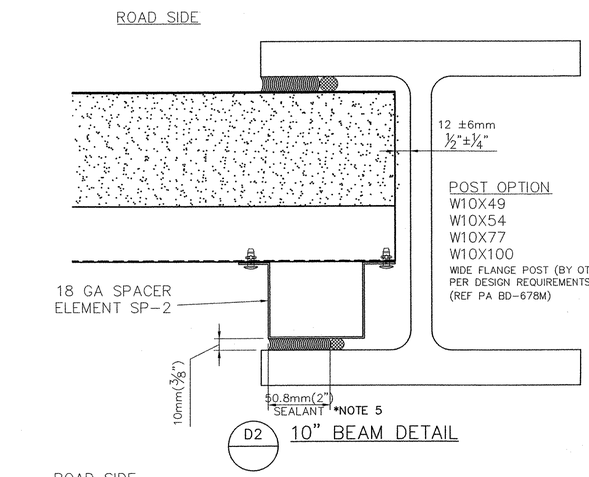

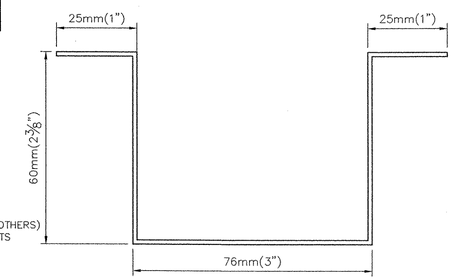

SP-2
PAINTED 18 GA. SPACER ELEMENT X 3'-0" LONG

SP-3
PAINTED 18 GA. SPACER ELEMENT X 3'-0" LONG

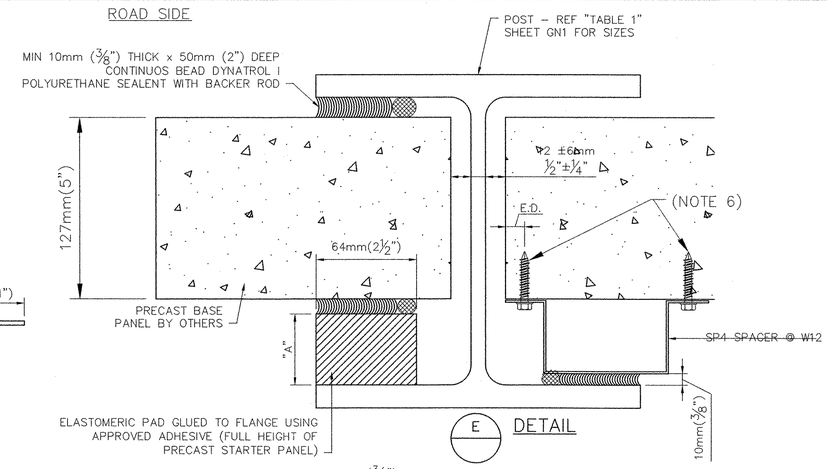

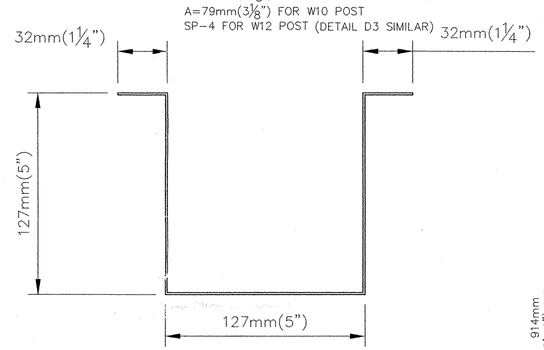

SP-4
PAINTED 18 GA. SPACER ELEMENT X 3'-0" LONG
FOR PRECAST STARTER PLANK

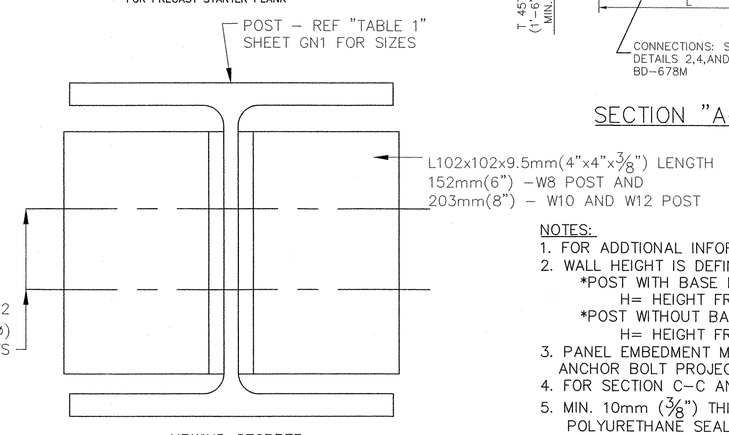

SECTION "C-C"

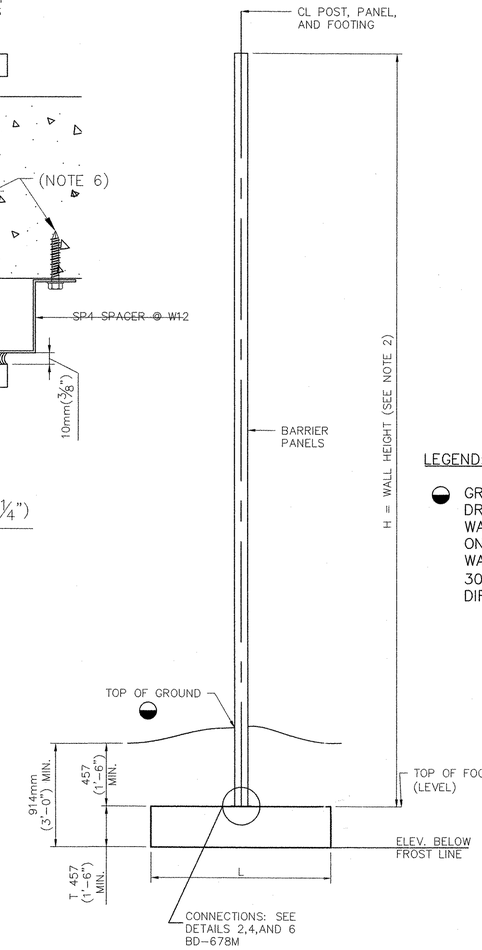

SECTION "A-A"

LEGEND:

GRADE GROUND TO DRAIN AWAY FROM WALL. FILL DEPTH ON EACH SIDE OF WALL TO BE WITHIN 300mm(1'-0") DIFFERENCE.

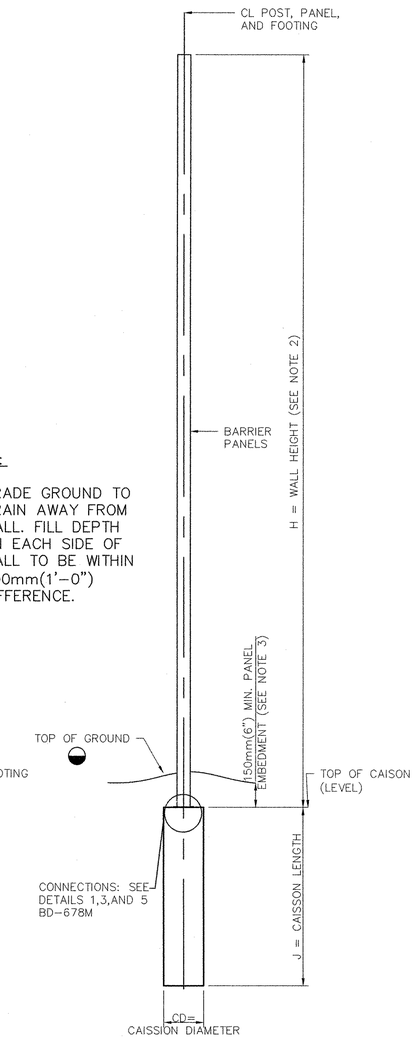

SECTION "B-B"

NOTES:

1. FOR ADDTIONAL INFORMATION REFER TO NOTES ON SHEET 1 AND 2 (BD-678M)
2. WALL HEIGHT IS DEFINED AS FOLLOWS:
   *POST WITH BASE PLATE:
   H= HEIGHT FROM TOP OF BASE PLATE TO TOP OF WALL
   *POST WITHOUT BASE BLATE:
   H= HEIGHT FROM TOP OF FOOTING/CASISSON TO TOP OF WALL
3. PANEL EMBEDMENT MAY NEED TO BE INCREASED TO ACCOMODATE BASE PLATES AND ANCHOR BOLT PROJECTIONS.
4. FOR SECTION C-C AND D-D, REFER TO BC-778M SHEETS 2 AND 3.
5. MIN. 10mm (3/8") THICK x 50mm (2") DEEP CONTINUOS BEAD DYNATROL I POLYURETHANE SEALANT WITH BACKER ROD BOTH SIDES
6. 6mm (1/4")x 32mm (1 1/4") ZINC PLATED CARBON STEEL WEDGE BOLT BY POWERS FASTENERS INC.
   *SPACING (MAX) 762mm (2'-6")
   *EMBEDED 25mm (1")
   *EDGE DISTANCE 19mm (3/4")

Q: /TSOBEHART/HIGHWAY SOUND BARRIER SYSTEM/VP400_ISO.DWG

CENTRIA

DWN. BY: trs	CHK. BY:
DATE: 10/3/05	DATE:

CENTRIA COATED STEEL SOUND BARRIER SYSTEM

A.K.A. VERSAPANEL SOUND BARRIER

PENNDOT PRODUCT EVALUATION DRAWING

SHEET 3 OF 4

COMMONWEALTH OF PENNSYLVANIA REGISTERED PROFESSIONAL ENGINEER CHUNBO SHIM NO. 032868-E

8-27-07

FEB 17 2009

ISSUE# 2	DATE: 8/15/07
CONTRACT #	PE#2006-206
DWG. #	E2

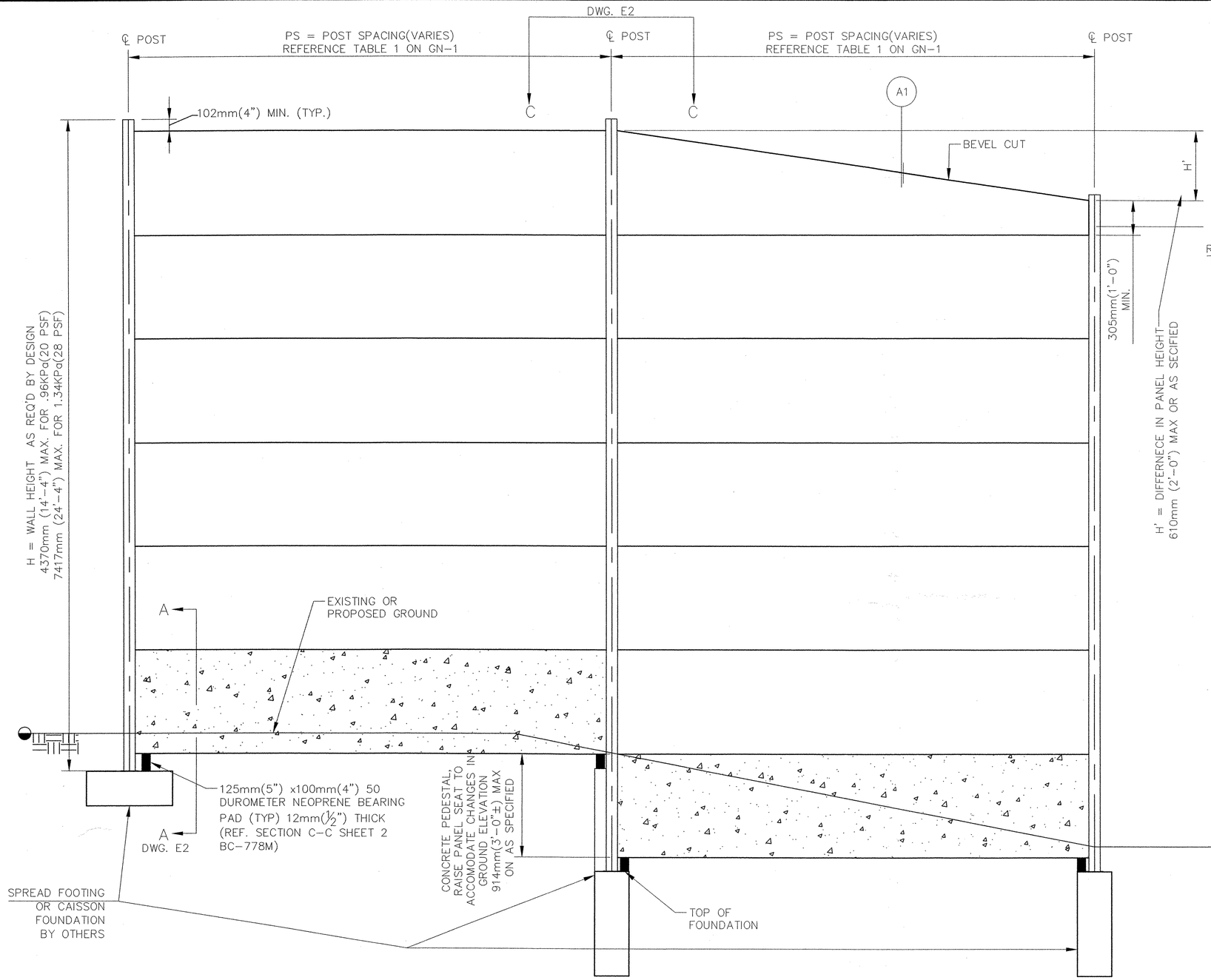

DETAIL @ PANEL STEPS

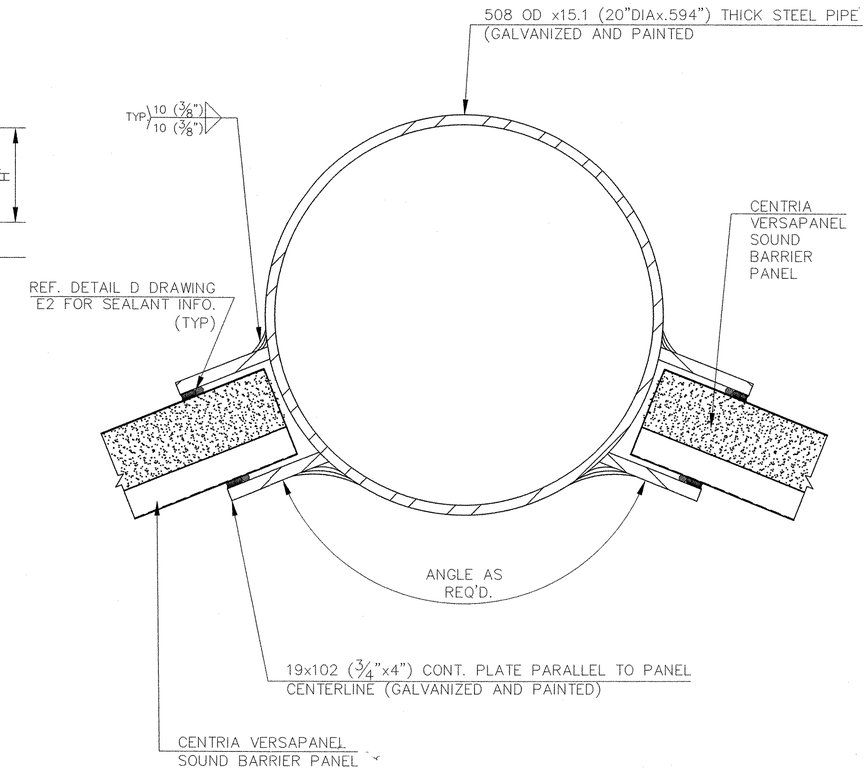

DETAIL @ ANGLED WALL INTERSECTION

NOTE:

1. REFERENCE SHEET 17 OF BD 678M FOR ADDITIONAL INFORMATION AND NOTES
2. CORNER/ANGLED STEEL PIPE POST EMBEDDED IN CAISSON OR SPARED FOOTING. REF. DETAILS 5 AND 6 OF BC-778M, SHEETS 9 AND 10.
3. DO NOT ALLOW PANEL TO CONTACT FINAL GRADE.

Q:/TSOBEHART/HIGHWAY SOUND BARRIER SYSTEM/12907/VP400_ISO.DWG

CENTRIA

DWN. BY: trs	CHK. BY:
DATE: 1/29/07	DATE:

CENTRIA COATED STEEL SOUND BARRIER SYSTEM
A.K.A. VERSAPANEL SOUND BARRIER

SHEET 4 OF 4

COMMONWEALTH OF PENNSYLVANIA
REGISTERED PROFESSIONAL
CHUNBO SHIM
ENGINEER
NO. 032868-E
8-27-07

ISSUE# 2	DATE: 8/15/07
CONTRACT #	PE#2006-206
DWG. #	E3

FEB 17 2009

Product:

Circular Base Plates for Press Brake Columns
for Overhead Sign Structures
PennDOT Drawing # 10-601-BQAD

Approval Date:	**Initiated By SOL:**
August 12, 2010	431-10-11

Application/Use:

The Department has approved this standard drawing for "Circular Base Plates for Press Brake Columns". Press brake columns are permitted as an alternate to the pipe sections listed for various columns shown in the Department's sign structures standards, BC-741M, BC-743M, BC-744M and BC-745M.

The following steps are to be completed when using press brake columns with circular base plates:

1. Select an equivalent press brake column size from PennDOT Drawing # 10-601-BQAD to replace the pipe column size listed in the sign structure standard.
2. Run PennDOT's SIGN program or an approved finite element analysis program to ensure that the press brake column member size chosen from this drawing satisfies both strength and fatigue requirements. If necessary to satisfy design requirements, revise press brake column member size.
3. Use the press brake column member size to determine the circular base plate size, and any associated details from this drawing, that replaces the rectangular base plate shown in the Department's sign structures standards.
4. Submit calculations and drawings for review and approval. The drawings need to include reference to drawing # 10-601-BQAD.

This circular base plate drawing and the related design calculations were developed by the VSI Sales's engineering staff in cooperation with the Bridge Quality Assurance Division.

Specifications:

AASHTO Standard Specifications for Structural Supports for Highway Signs, Luminaires, and Traffic Signals, 4th Edition, 2001, with interims thru 2006.

PennDOT Publication 408, Section 948 – Steel Sign Structure.

Standard Drawing:

Attached is a copy of the PennDOT Drawing # 10-601-BQAD (dated August 12, 2010)

Comment:

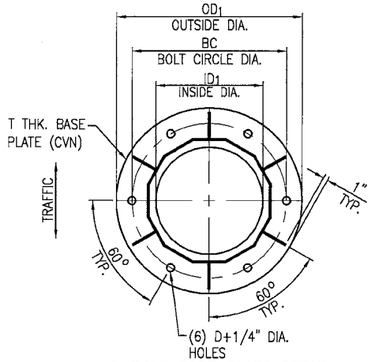

6-BOLT BASE PLATE DETAIL

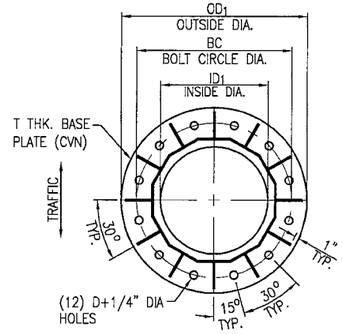

12-BOLT BASE PLATE DETAIL

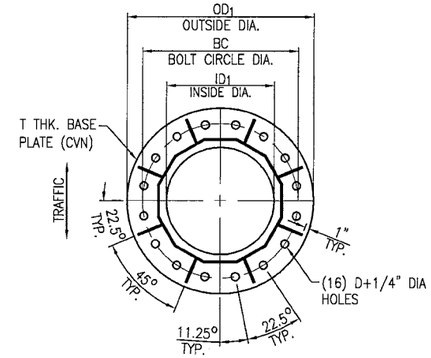

16-BOLT BASE PLATE DETAIL

12-SIDED PRESS BRAKE COLUMN *	ANCHOR BOLT DATA							BASE PLATE DATA			ANCHOR & SETTING PLATE DATA			PEDESTAL DATA **
	QTY.	D (in.)	BC (in.)	TT (in.)	P (in.)	L (in.)	EMB (in.)	T (in.)	OD_1 (in.)	ID_1 (in.)	OD_2 (in.)	ID_2 (in.)	CLIP REQUIRED	MIN. PEDESTAL WIDTH or SQ.
9 x .3125	6	1.25	14	8	7.25	36	25.25	1.5	19	5.38	19	9		2'-6"
10.6 x .375	6	1.5	16	8	8	41	30	1.5	21	6.87	21	11	YES	2'-6"
12.6 x .375	6	1.75	18	10.25	9	48	35.5	1.75	23	8.87	23	13		2'-9"
14 x .375	6	1.75	19.5	10.25	9.25	48	35.5	2	24.5	10.25	24.5	14.5		3'-0"
16 x .375	12	1.5	21.5	8	8	41	30	1.5	26.5	12.25	26.5	16.5		3'-3"
22 x .3125	12	1.5	30	8	8	41	30	1.5	35	18.375	35	25		3'-9"
24 x .3125	12	1.5	30	8	8	41	30	1.5	35	20.375	35	25		3'-9"
28 x .3125	16	1.5	36	8	8.5	41	30	2	41	24.375	41	31		4'-3"
26 x .375	16	1.5	36	8	8.5	41	30	2	41	22.5	41	31		4'-3"
24 x .5	16	1.5	36	8	8.5	41	30	2	41	20	41	31		4'-3"
26.5 x .5	16	1.75	36	10.25	9.75	48	35	2.5	41	22.5	41	31		4'-3"
29 x .5	16	2	36	11.75	10.75	54	40	2.75	42	25	42	30	YES	4'-3"
29 x .625	16	2	36	11.75	11	54	40	3	42	25	42	30	YES	4'-3"
26 x .875	16	2.25	34	11.75	11.75	60	45	3	41	21.25	41	28		4'-3"
25.25 x 1.125	16	2.25	36	11.75	11.75	60	45	3	43	20	42	30	YES	4'-3"
26 x 1.375	16	2.75	34	14	14	72	55	3.25	43	20	41.62	28	YES	4'-3"
24.3 x 1.75	16	2.75	34	14	14	72	55	3.25	43	18	41.62	28	YES	4'-3"

* COLUMN O.D. x WALL THICKNESS, PRESS BRAKE COLUMN O.D. IS MEASURED FROM FLAT TO FLAT

** SEE APPLICABLE BC STANDARD BC-741M, BC-743M, BC-744M, or BC-745M FOR REINFORCEMENT DETAILS.

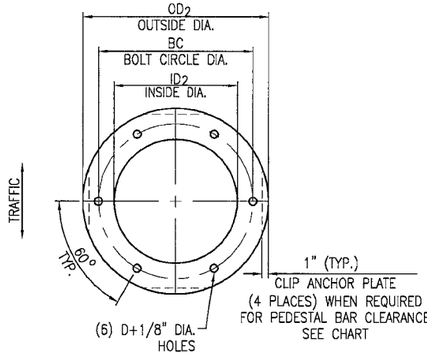

6-BOLT ANCHOR/SETTING PLATES DETAIL

3/4" THK. ANCHOR PLATE
1/4" THK. SETTING PLATE

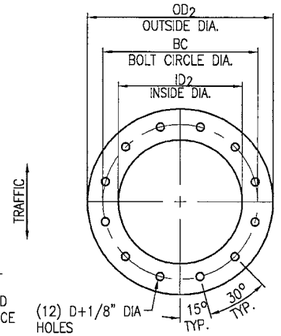

12-BOLT ANCHOR/SETTING PLATES DETAIL

3/4" THK. ANCHOR PLATE
1/4" THK. SETTING PLATE

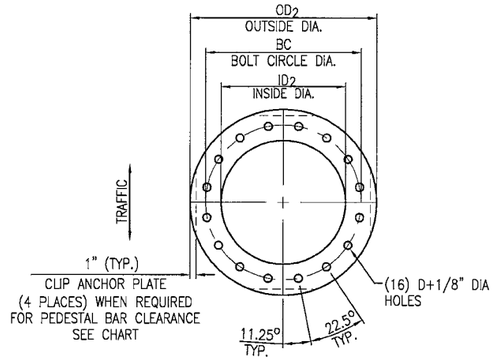

16-BOLT ANCHOR/SETTING PLATES DETAIL

3/4" THK. ANCHOR PLATE
1/4" THK. SETTING PLATE

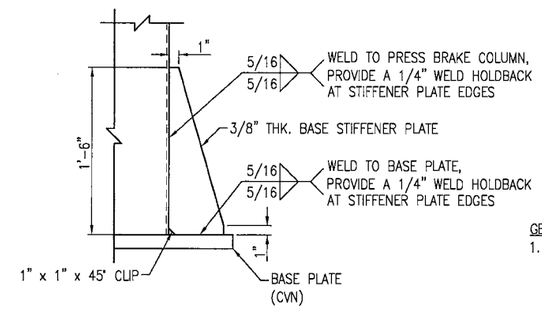

BASE STIFFENER WELD DETAIL

GENERAL NOTES:

1. ALL WELDING TO CONFORM TO ANSI/AASHTO/AWS D1.5 2002 EDITION STRUCTURAL STEEL WELDING CODE. USE ANSI/AASHTO/AWS D1.1 FOR WELDING NOT COVERED BY ANSI/AASHTO/AWS D1.5.
2. STEEL MEMBER COMPONENTS REQUIRING CHARPY V-NOTCH TESTING ARE DESIGNATED ON THIS SHEET BY (CVN), PROVIDE STEEL CONFORMING TO THE CVN REQUIREMENTS FOR ZONE 2, NON FRACTURE CRITICAL AS GIVEN IN THE AASHTO MATERIAL SPECIFICATIONS.
3. FOR ALL OTHER FABRICATION DETAILS AND MATERIALS SEE APPLICABLE BRIDGE CONSTRUCTION STANDARD BC-741M, BC-743M, BC-744M, or BC-745M.

MATERIAL NOTES:

1. PRESS BRAKE COLUMNS - ASTM A709 GR. 36 MIN. or ASTM A36 MIN.
2. PLATES - ASTM A709 GR. 36 MIN. or ASTM A36 MIN.
3. ANCHOR BOLTS - ASTM F1554, GRADE 55.
4. ANCHOR HEX NUTS - ASTM A563 GR. DH or A194 GR. 2H.
5. ANCHOR FLAT WASHERS - ASTM F436.

DESIGN NOTE:

1. DESIGNED IN ACCORDANCE WITH PENNDOT BRIDGE CONSTRUCTION STANDARDS FOR OVERHEAD SIGN STRUCTURES AND AASHTO STANDARD SPECIFICATIONS FOR STRUCTURAL SUPPORTS FOR HIGHWAY SIGNS, LUMINAIRES AND TRAFFIC SIGNALS (4th EDITION, 2001, AND INTERIMS THRU 2006).

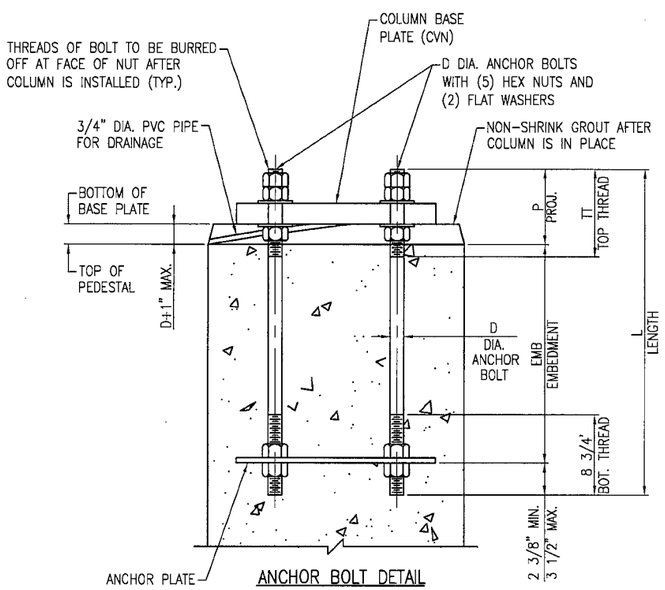

ANCHOR BOLT DETAIL

PRESS BRAKE COLUMN, STIFFENERS, AND REINF. OMITTED FOR CLARITY

ANCHOR BOLTS, NUTS AND WASHERS HOT DIP GALVANIZED PER ASTM A153.
ANCHOR PLATE HOT DIP GALVANIZED PER ASTM A123.

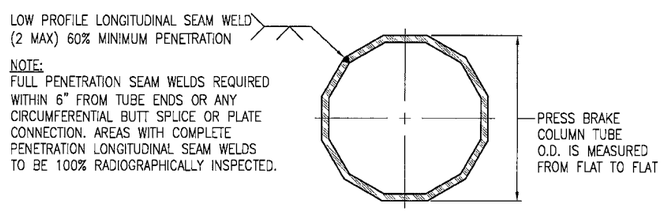

NOTE:
FULL PENETRATION SEAM WELDS REQUIRED WITHIN 6" FROM TUBE ENDS OR ANY CIRCUMFERENTIAL BUTT SPLICE OR PLATE CONNECTION. AREAS WITH COMPLETE PENETRATION LONGITUDINAL SEAM WELDS TO BE 100% RADIOGRAPHICALLY INSPECTED.

PRESS BRAKE COLUMN TUBE CROSS SECTION

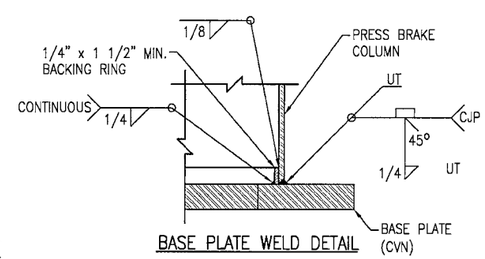

BASE PLATE WELD DETAIL

BASE PLATE WELD NOTES:

1. ALL WELD STARTS AND STOPS AT BASE PLATE TO PRESS BRAKE COLUMN AND OTHER COLUMN CONNECTIONS MUST BE WITHIN THE MIDDLE THIRD REGION OF FLAT SECTIONS BETWEEN BRAKE POINTS.
2. BACKING RING MUST BE FITTED/SIZED TO THE PRESS BRAKE COLUMN AND CONTINUOUSLY FILLET WELDED TO THE BASE PLATE BEFORE THE FULL PENETRATION GROOVE WELD IS MADE.

AUG. 12, 2010

PENNSYLVANIA
DEPARTMENT OF TRANSPORTATION
RECOMMENDED

Thomas P Macioce

CHIEF BRIDGE ENGINEER

REV.	DATE	REVISION	BY	CHK'D

SEAL

COMMONWEALTH OF PENNSYLVANIA
REGISTERED PROFESSIONAL
ANTHONY J. DiSIMONE
ENGINEER
PE074688

Anthony J. DiSimone 7-21-10

VSIS
VSI SALES, LLC
MARS, PENNSYLVANIA 16046
PHONE: 724-625-4060
FAX: 724-625-4088

OVERHEAD SIGN STRUCTURES

CIRCULAR BASE PLATES
FOR
PRESS BRAKE COLUMNS

DRAWN BY:	CHK'D BY:	SHEET 1 OF 1
JEA	HA	10-601-BQAD
7-21-10	7-21-10	

Product:

Spliced Prestressed Concrete Girder Standards
PennDOT Drawing # 09-601-BQAD

Approval Date:	**Initiated By SOL:**
December 21, 2010	431-10-15[(1)]

Application/Use:

Spliced Prestressed Concrete Girder Standards developed by Central Atlantic Bridge Associates is based on the PA Bulb Tee beam type. The Spliced Prestressed Concrete Girder Standards are approved for use in **"As-Designed", "Design Build"** or **"Alternate"** structures.

The beam is limited to the following applications as prototype installations:

- Maximum span length: 225 feet
- Maximum PA Bulb Tee Size: 33 x 95.5
- Minimum skew angle: 70 degrees
- Horizontal alignment: Tangent sections
- Structure configuration: Simple Span or Simple Span made continuous.
  - Approved method is to design in accordance with DM4 5.14.1.2.7eP which states:
    - a simple span analysis for non-composite dead load and
    - the more critical of either a continuous span analysis assuming full continuity, or a simple span analysis assuming the complete loss of continuity for composite dead load and live load (without creep and shrinkage effects)
  - Use of full continuity design per DM4 5.14.1.2.7dP and DM4 5.14.1.2.7eP must be approved by the Chief Bridge Engineer at the TS&L stage.

The Spliced Prestressed Concrete Girders are to be designed/analyzed to meet both AASHTO and Design Manual, Part 4 criteria. A Load Rating Table and Rating Procedure must be incorporated on the Contract Drawings based on both the actual post-tensioned tendon configuration and an equivalent number of single strand configuration. Contact the Bridge Quality Assurance Division for design and/or analysis questions.

Specifications:

The beam is to be fabricated and constructed per Publication 408 Sections 1080, 1107 and 1108.

Standard Drawing:

Attached is a copy of the Standard Drawing # 09-601-BQAD

Comment:

FHWA approval has been secured for the Spliced Prestressed Concrete Girders.
Code as structure type in BMS2 (6A26 – 6A29) as:
44204: Pre/Post-Tensioned Simple Composite Concrete I-Beam (multiple) structure type
44404: Pre/Post-Tensioned Continuous Composite Concrete I-Beam (multiple) structure type

(1) BDTD revised the previously issued drawings to incorporate two (2) changes on the grout requirements to meet state of practice.

STANDARD DRAWINGS FOR SPLICED GIRDERS

INTRODUCTION

THESE PLANS ARE INTENDED TO SERVE AS THE BASIS FOR STANDARDIZING THE DESIGN, DETAILING, FABRICATION, AND ERECTION OF PLANT-CAST PRECAST, PRETENSIONED CONCRETE GIRDERS THAT HAVE BEEN SEGMENTED FOR TRANSPORTATION PURPOSES AND ASSEMBLED AT OR NEAR THE PROJECT SITE USING POST-TENSIONING TECHNOLOGY. THE SCOPE OF THIS PHASE OF THE DEVELOPMENT OF SPLICED GIRDER STANDARDS IS LIMITED TO THE SEGMENTATION OF A SINGLE PRISMATIC GIRDER OF A SINGLE SPAN OF A BRIDGE. SEGMENTATION IS ASSUMED TO RESULT IN THREE PIECES OF VARYING LENGTH. ASSEMBLY OF THE SEGMENTS IS ASSUMED TO TAKE PLACE ON THE GROUND AT OR NEAR THE JOB SITE OR, ALTERNATIVELY, ON FALSEWORK IN THE GIRDER'S FINAL POSITION IN THE BRIDGE.

WHILE THESE STANDARDS HAVE BEEN DEVELOPED TO BE APPLICABLE FOR A TYPICAL RANGE OF VARIATION OF PROJECT PARAMETERS, IT SHOULD BE RECOGNIZED THAT THE DESIGN CRITERIA AND THE PARTICULAR GEOMETRY FOR A BRIDGE PROJECT MAY NECESSITATE THAT THE DETAILS CONTAINED HEREIN BE ADAPTED TO CONFORM TO THE SPECIFICS OF THE PROJECT. PROPER ENGINEERING JUDGMENT MUST BE USED IN ALL CASES.

GENERAL NOTES

1. SPECIFICATIONS
   PENNDOT DESIGN MANUAL, PART 4 (DM-4)
   AASHTO LRFD BRIDGE DESIGN SPECIFICATIONS, 3RD ED. 2004.
   PENNDOT SPECIFICATIONS, PUBLICATION 408/2007.

1.1 DESIGN CRITERIA:

- FOR THE BEAM PRESTRESSING SEGMENT DESIGN, USE APPROPRIATE CONSTRUCTION LOAD OF AASHTO SECTION 5.14.2.3.2 AS THE DESIGN LOAD. THE BEAM SEGMENT DESIGN IS SPECIFIED IN AASHTO SECTION 5.14.13.3.
- DESIGN THE BEAMS AND POST-TENSIONING WITH PENNDOT APPROVED SOFTWARE.
- ~~FOR MULTI SPAN STRUCTURES DESIGN THE BEAMS AS SIMPLE FOR NON-COMPOSITE DEAD LOADS AND CONTINUOUS FOR COMPOSITE DEAD LOADS AND LIVE LOAD. DO NOT DESIGN FOR FULL CONTINUITY WITHOUT THE PRIOR APPROVAL OF THE CHIEF BRIDGE ENGINEER.~~
- THE MAXIMUM RATIO OF THE SPAN LENGTH TO STRUCTURE DEPTH (GIRDER + DECK) SHALL BE 30.

APPROVED METHOD IS TO DESIGN IN ACCORDANCE WITH DM4 5.14.1.2.7eP WHICH STATES:
- A SIMPLE SPAN ANALYSIS FOR NON-COMPOSITE DEAD LOAD AND
- THE MORE CRITICAL OF EITHER A CONTINUOUS SPAN ANALYSIS ASSUMING FULL CONTINUITY, OR A SIMPLE SPAN ANALYSIS ASSUMING COMPLETE LOSS OF CONTINUITY FOR COMPOSITE DEAD LOAD AND LIVE LOAD (WITHOUT CREEP AND SHRINKAGE EFFECTS)

USE OF FULL CONTINUITY DESIGN PER DM4 5.14.1.2.7dP AND DM4 5.14.1.2.7eP MUST BE APPROVED BY THE CHIEF BRIDGE ENGINEER AT THE T.S.&L. STAGE.

2. MATERIALS

2.1 CONCRETE

MINIMUM 28-DAY STRENGTH:
GIRDER SEGMENTS: 8.0 KSI
CLOSURE POURS: 8.0 KSI

2.2 REINFORCING STEEL

GRADE 60 REINFORCING STEEL BARS THAT MEET THE REQUIREMENTS OF ASTM A 615/A 615M-96A, A 996/A 996M OR 706/A 706M-96-B.

MINIMUM LAP AND EMBEDMENT LENGTH OF 30 DIAMETERS OR IN ACCORDANCE WITH AASHTO, AS MODIFIED BY DM-4, WHICHEVER IS GREATER.

2.3 PRESTRESSING STEEL

2.3.1 PRETENSIONING

UNCOATED 7-WIRE LOW-RELAXATION STRANDS MEETING THE REQUIREMENTS OF ASTM A416 GRADE 270, MODULUS OF ELASTICITY 28,000 KSI SHALL BE USED.

2.3.2 POST-TENSIONING

2.3.2.1 GENERAL

UNCOATED 7-WIRE LOW-RELAXATION STRANDS MEETING THE REQUIREMENTS OF ASTM A416 GRADE 270, MODULUS OF ELASTICITY 28,000 KSI SHALL BE USED.
MODULUS OF ELASTICITY: 28,000 KIPS
MAXIMUM JACKING STRESS: 216 KSI (DM-4, TABLE 5.9.3-1)
MAXIMUM ANCHORING STRESS AS ANCHORAGE: 189 KSI
ANCHOR SET: 3/8"
FRICTION COEFFICIENT: 0.25
WOBBLE COEFFICIENT: 0.0002 RAD/FT

2.3.2.2 ACCEPTANCE TESTING OF SPECIAL ANCHORAGE DEVICES.

SPECIAL ANCHORAGE DEVICES SHALL COMPLY WITH THE TESTING REQUIREMENTS OF ARTICLE 10.3.2.3 OF THE AASHTO LRFD CONSTRUCTION SPECIFICATIONS.

2.4 DUCTS

USE CORRUGATED PLASTIC POST-TENSIONING DUCTS WHERE APPLICABLE. CORRUGATED GALVANIZED STEEL DUCTS MUST BE USED WHEN REQUIRED TO MEET AASHTO ALLOWABLE RADIUS LIMITS.

2.4.1 PLASTIC DUCTS

CORRUGATED DUCT MANUFACTURED FROM NON-COLORED, UNFILLED POLYPROPYLENE MEETING THE REQUIREMENTS OF ASTM D4101 "STANDARD SPECIFICATION FOR POLYPROPYLENE PLASTIC INJECTION AND EXTRUSION MATERIALS" WITH A CELL CLASSIFICATION RANGE OF PP0340B14541 TO PP0340B67884 SHALL BE USED. THE DUCT SHALL BE WHITE IN COLOR CONTAINING ANTIOXIDANT(S) WITH A MINIMUM OXIDATION INDUCTION TIME (OIT) ACCORDING TO ASTM D 3895 OF 20 MINUTES AND CONTAINING A NON-YELLOWING LIGHT STABILIZER. THE MAXIMUM DIAMETER OF THE DUCT SHALL BE 3 ¼" WITH A WALL THICKNESS OF 0.10". THE AREA OF THE DUCT SHALL BE AT LEAST TWICE THE NET AREA OF THE PRESTRESSING STEEL IN THE DUCT.

CARE SHALL BE USED IN HANDLING AND INSTALLING DUCTS DURING THE FABRICATION PROCESS. DUCT ENDS SHALL BE CAPPED DURING CONCRETING OPERATIONS AND DURING SHIPPING TO PROTECT AGAINST INFILTRATION OF FOREIGN MATTER. DUCTS SHALL BE PROTECTED FROM DAMAGE AND SHIELDED FROM PROLONGED EXPOSURE TO SUNLIGHT DURING STORAGE, SHIPPING, AND DURING THE SEGMENT ASSEMBLY PROCESS.

2.4.2 METAL DUCTS

METAL DUCTS SHALL BE CORRUGATED GRADE 60 GALVANIZED IN CONFORMANCE WITH ASTM A653. DUCT WALLS SHALL HAVE A MINIMUM THICKNESS OF 24 GAUGE.

2.5 GROUT

ONLY GROUTS LISTED IN PENNDOT BULLETIN 15, APPROVED CONSTRUCTION MATERIALS SHALL BE USED.

3. DESIGN

3.1 GIRDER SHAPE AND SIZE

PENNDOT BULB TEE GIRDERS SERVE AS THE BASIS FOR THESE STANDARDS. PENNDOT GIRDER TYPE 33/95.5 WAS USED TO DEVELOP THE DRAWINGS AND DETAILS CONTAINED HEREIN. HOWEVER, THESE DETAILS ARE GENERALLY APPLICABLE TO SHORTER MEMBERS OF THIS GIRDER FAMILY WITH AN 8" OR THICKER WEB AND WITH BULB AND FLANGE GEOMETRIES THAT CAN ACCOMMODATE THE REQUIRED REINFORCEMENT.

3.2 SEGMENT DESIGN

GIRDER SEGMENTS SHALL BE DESIGNED TO RESIST BEAM SELF-WEIGHT PLUS HANDLING AND CONSTRUCTION LOADS AS PER THE SPECIFICATIONS. PRETENSIONING IS ASSUMED TO BE THE PRIMARY FLEXURAL REINFORCEMENT FOR THE SEGMENTS. STRAND PATTERN PROFILES SHALL BE STRAIGHT.

3.3 ASSEMBLED GIRDER

PRIMARY FLEXURAL REINFORCEMENT RESISTING LOADS APPLIED TO THE GIRDER IN ITS FINAL CONFIGURATION IS ASSUMED TO BE POST-TENSIONING. DETAILS AND DUCT LAYOUTS SHOWN IN THESE STANDARDS ARE PRESENTED AS TYPICAL. THE ACTUAL NUMBER, SIZE, AND LAYOUT OF TENDONS ARE PROJECT-SPECIFIC. MINIMUM DUCT SPACING SHALL BE 5", THE OUTER DUCT DIAMETER PLUS 1.5 TIMES MAXIMUM AGGREGATE SIZE, OR THE OUTER DUCT DIAMETER PLUS 2", WHICHEVER IS GREATER. SIZE AND SPACING OF NON-PRESTRESSED REINFORCEMENT SHALL BE AS PER PROJECT REQUIREMENTS.

CONSTRUCTION AND WIND LOADS AND ALL OTHER LOADS THAT ACT ON THE GIRDERS THAT MAY CAUSE LATERAL-TORSIONAL INSTABILITY SHALL BE CONSIDERED IN THE DESIGN OF THE GIRDER AND THE DESIGN OF THE CONSTRUCTION AND ERECTION SCHEMES.

TEMPORARY PRESTRESSING MAY BE NECESSARY FOR THE HANDLING AND ERECTING OF GIRDERS (SEE SHEET 5).

3.4 ANCHORAGE ZONES

LOCAL ZONE REINFORCEMENT SHALL BE DESIGNED BY THE POST-TENSIONING SYSTEM SUPPLIER. GENERAL ZONE REINFORCEMENT SHALL BE DESIGNED BY THE ENGINEER.

4. SEGMENT FABRICATION

4.1 FABRICATION TOLERANCES - SEE PUBLICATION 408, SECTION 1107

4.2 FORMING

METAL SIDE FORMS SHALL BE USED FOR SEGMENT FABRICATION. CARE SHALL BE TAKEN TO ENSURE THAT SEGMENT ENDS AND ALL EXTENDED STRANDS, REINFORCEMENT, AND DUCTS MATCH TO THE CORRESPONDING ENDS OF ADJACENT SEGMENTS.

4.3 DUCTS

MAXIMUM SPACING OF SUPPORT BARS FOR THE POST-TENSIONING DUCTS SHALL BE 2'-0". DUCTS SHALL BE AIR-TESTED PRIOR TO CONCRETE PLACEMENT. UPON COMPLETION OF CONCRETE PLACEMENT, POST-TENSIONING DUCTS SHALL BE DEMONSTRATED TO BE FREE AND CLEAR OF ANY OBSTRUCTIONS OR DAMAGE AND ARE ABLE TO ACCEPT THE INTENDED POST-TENSIONING TENDONS BY PASSING A TORPEDO THROUGH THE DUCTS. TORPEDO HAVING THE SAME CROSS-SECTIONAL SHAPE AS THE DUCT AND BE ¼" SMALLER ALL AROUND THAN THE CLEAR, NOMINAL INSIDE DIMENSIONS OF THE DUCT.

4.4 PRETENSIONING

GIRDER LENGTHS SHALL BE INCREASED AS NECESSARY TO COMPENSATE FOR SHORTENING DUE TO PRETENSIONING AND POST-TENSIONING AND SHRINKAGE.

EXCEPT FOR EXTENDED STRANDS AS SHOWN, CUT ALL REMAINING STRANDS 1" BELOW SURFACE OF GIRDER END AND PAINT WITH AN APPROVED EPOXY RESIN.

4.5 SURFACE TREATMENTS

4.5.1. TOP OF GIRDER

THE TOP SURFACE OF THE GIRDER FLANGE SHALL RECEIVE A RAKED FINISH TO ¼" AMPLITUDE.

4.5.2 SEGMENT ENDS

SEGMENT ENDS OF CLOSURE POURS SHALL HAVE A ~~SHEAR KEY~~ SAWTOOTH CONFIGURATION AS DETAILED ON SHEET 2 & 5.

5. SEGMENT ASSEMBLY

5.1 SEGMENT HANDLING

SEGMENTS SHALL ONLY BE HANDLED, HAULED, AND STORED IN AN UPRIGHT POSITION. ONLY LIFTING LOOPS OR DEVICES PROVIDED AT ENDS SHALL BE USED TO HANDLE THE SEGMENTS.

5.2 SEGMENT ALIGNMENT

SEGMENTS SHALL BE SET ON TIMBER SUPPORTS, FOUNDED ON LEVEL GROUND CAPABLE OF SAFELY SUPPORTING THE REQUIRED BEARING PRESSURES. CARE SHALL BE TAKEN TO ENSURE PROPER ALIGNMENT OF SEGMENTS. ALIGNMENT TOLERANCES SHALL BE AS FOLLOWS:

VERTICAL: 1/8"
HORIZONTAL: 1/8"
TRANSVERSE: 1/8"

5.3 CLOSURE POUR

ALIGNMENT OF GIRDER SEGMENTS SHALL BE CHECKED IMMEDIATELY PRIOR TO PLACEMENT OF CLOSURE POUR CONCRETE.

5.4 POST-TENSIONING

GIRDERS SHALL NOT BE STRESSED UNTIL THE GIRDER AND CLOSURE POUR MEET THEIR DESIGN STRENGTHS.

CONDUCT POST TENSIONING OPERATIONS IN ACCORDANCE WITH PUBLICATION 408, SECTION 1108.

5.5 GROUTING

GROUTING OPERATION SHALL BE COMMENCED PROMPTLY AFTER COMPLETION OF POST-TENSIONING OPERATION.

5.6 ANCHORAGE PROTECTION

PERMANENT GROUT END CAPS SHALL BE INSTALLED AND GROUTED IN ACCORDANCE WITH POST-TENSIONING SUPPLIER'S RECOMMENDATIONS. ANCHORAGE RECESSES IN END GIRDER END SEGMENTS SHALL BE FILLED WITH EPOXY-MODIFIED MORTAR.

UPON COMPLETION AND INSPECTION OF GROUTING OPERATION, ANCHORAGE BLOCK-OUTS SHALL BE FILLED WITH EXPOXY-MODIFIED GROUT.

6. HANDLING & ERECTION OF ASSEMBLED GIRDER

STABILITY OF GIRDERS IS TO BE MAINTAINED BY THE CONTRACTOR DURING ERECTION, UNTIL ALL GIRDERS AND DIAPHRAGMS ARE IN PLACE. ERECTION LOADS INCLUDING SELF WEIGHT OF THE GIRDERS, WIND LOADING AND CONSTRUCTION LIVE LOAD EFFECTS ARE TO BE EVALUATED BY THE CONTRACTOR FOR STABILITY, STRESSES AND DEFLECTIONS ON THE GIRDERS DURING ANY STAGE OF ERECTION.

LIFTING MEANS AND HARDWARE SHALL BE DESIGNED BY THE CONTRACTOR AND SHALL BE INCLUDED IN THE SHOP DRAWINGS. EXTREME CAUTION SHALL BE EXERCISED IN ALL LIFTING, HANDLING, AND PLACING OPERATIONS OF GIRDERS. ADEQUATE BRACING SHALL BE USED TO ENSURE STABILITY AT ALL TIMES AGAINST TIPPING, LATERAL DEFLECTION, AND LATERAL BUCKLING. CONSTRUCTION LOADS AND WIND LOADS AND ALL OTHER LOADS THAT ACT ON THE GIRDERS TO CAUSE VERTICAL AND LATERAL INSTABILITY SHALL BE CONSIDERED IN THE DESIGN OF THE ERECTION SCHEME. CAUTION SHOULD BE EXERCISED WHEN SETTING GIRDERS ON BEARINGS TO ENSURE THAT GIRDER SWEEP IS NOT AMPLIFIED BY INADEQUATE ROTATIONAL RESISTANCE OF BEARINGS. TRANSVERSE BRACING SHOULD BE SECURELY INSTALLED BETWEEN GIRDERS PRIOR TO REMOVAL OF CRANE LOAD FROM GIRDER ENDS. ADDITIONAL INTERMEDIATE CROSS BRACING SHOULD BE INSTALLED ONCE THE GIRDER ENDS ARE SECURE.

INDEX OF DRAWINGS

SHEET NO.	TITLE
1	OVERVIEW
2	GIRDER DIMENSIONS
3	PRESTRESSING - END SEGMENT
4	PRESTRESSING - MID SEGMENT
5	PRESTRESSING - MISCELLANEOUS
6	END SEGMENT REINFORCEMENT
7	MID SEGMENT REINFORCEMENT
8	SEGMENT ASSEMBLY - GROUND
9	ERECTION SCHEME - FALSEWORK
10	GROUT SPECIFICATIONS
11	GROUT SPECIFICATIONS
12	GROUT SPECIFICATIONS

PENNDOT DRAWING 09-601-BQAD

DEC. 21 2010

PENNSYLVANIA
DEPARTMENT OF TRANSPORTATION
RECOMMENDED
Thomas P Macioce
CHIEF BRIDGE ENGINEER

CORRECTIONS MADE BY BRIDGE QUALITY ASSURANCE DIVISION ON 12-10-2010

COMMONWEALTH OF PENNSYLVANIA
REGISTERED PROFESSIONAL
ROY L. ERIKSSON
ENGINEER
PE 077232
08-31-10

MARK	DESCRIPTION	BY	CHK'D	RECM'D	DATE

REVISIONS

CENTRAL ATLANTIC BRIDGE ASSOCIATES (CABA)
Eriksson technologies 813.989.3317 TAMPA, FL LRFD.COM

COMMONWEALTH OF PENNSYLVANIA
DEPARTMENT OF TRANSPORTATION

SPLICED PRESTRESSED
CONCRETE GIRDER STANDARDS

OVERVIEW OF SYSTEM, INSTRUCTIONS
& GENERAL NOTES

DATE: 08/31/10
SCALE: N/A
DWN: CWS CK'D: RLE
JOB NO:
SHEET NO: 1

S:\Engineering Services\CABA\Production Drawings\AutoCAD Files\SG-1.dwg, 8/31/2010 4:18:17 PM, Adobe PDF

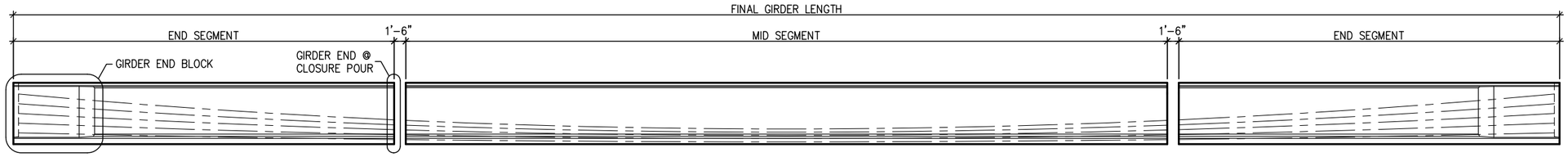

TYPICAL GIRDER ELEVATION

SCALE: 1/16"=1'-0"

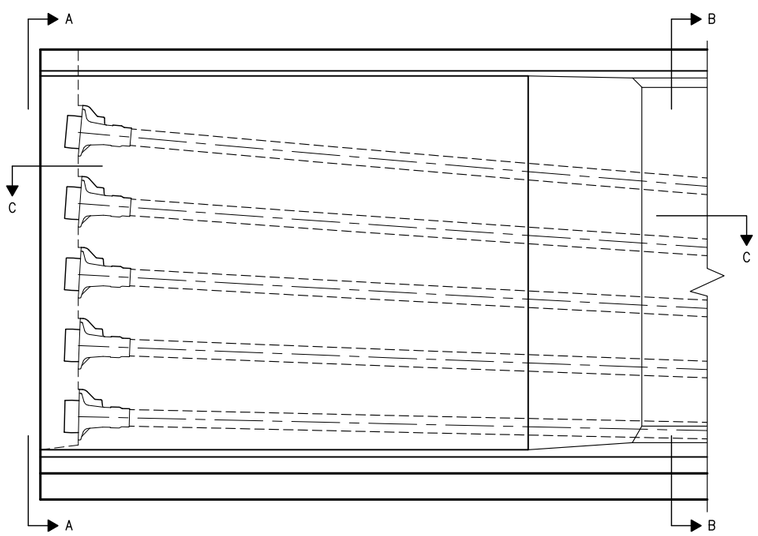

(SPIRALS NOT SHOWN FOR CLARITY)

GIRDER END BLOCK

SCALE: 3/8"=1'-0"

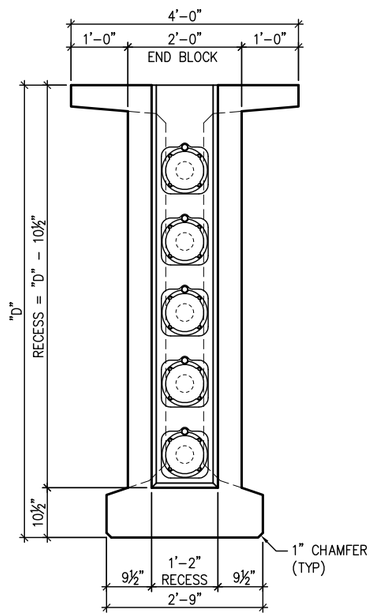

VIEW A–A

SCALE: 3/8"=1'-0"

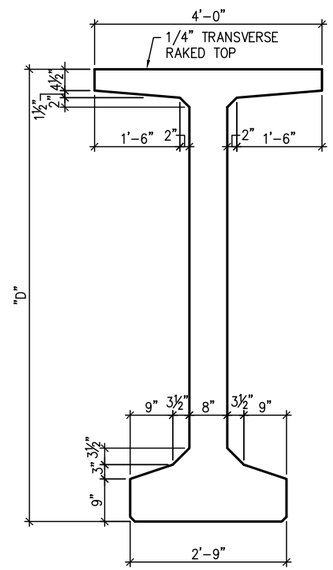

TYPICAL SECTION
SECTION B–B

SCALE: 3/8"=1'-0"

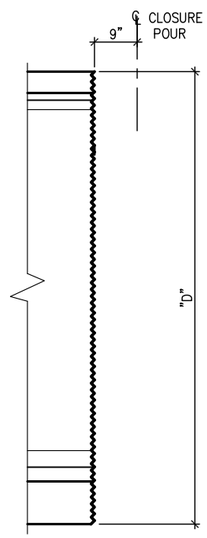

GIRDER END @
CLOSURE POUR

SCALE: 3/8"=1'-0"

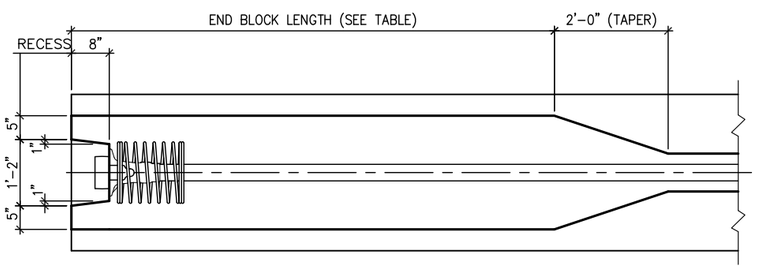

(REINFORCING NOT SHOWN FOR CLARITY)

END BLOCK
SECTION C–C

SCALE: 3/8"=1'-0"

END BLOCK DIMENSIONS

GIRDER DEPTH	END BLOCK LENGTH	TAPER LENGTH
95.5	8'-6"	2'-0"
87.5	8'-0"	2'-0"
79.5	7'-0"	2'-0"
71.5	6'-6"	2'-0"
63.5	6'-0"	2'-0"
55.5	6'-0"	2'-0"

PA SPLICED BULB–TEE GIRDERS

TYPE	DEPTH "D" in	AREA in²	I_{xx} in⁴	y_b in	I_{yy} in⁴	WT. klf
BT95.5	95.5	1266	1,521,445	46.02	80,687	1.319
BT87.5	87.5	1202	1,222,412	42.15	80,345	1.252
BT79.5	79.5	1138	961,802	38.30	80,004	1.185
BT71.5	71.5	1074	737,558	34.47	79,663	1.119
BT63.5	63.5	1010	547,622	30.66	79,321	1.052
BT55.5	55.5	946	389,933	26.88	78,980	0.985

DEC. 21 2010 PENNDOT DRAWING 09–601–BQAD

COMMONWEALTH OF PENNSYLVANIA
REGISTERED PROFESSIONAL
ROY L. ERIKSSON
ENGINEER
PE 077232

08·31·10

CENTRAL ATLANTIC BRIDGE ASSOCIATES (CABA)

Eriksson technologies 813.989.3317 TAMPA, FL LRFD.COM

COMMONWEALTH OF PENNSYLVANIA
DEPARTMENT OF TRANSPORTATION

SPLICED PRESTRESSED
CONCRETE GIRDER STANDARDS

GIRDER DIMENSIONS

DATE: 08/31/10
SCALE: AS SHOWN
DWN: CWS CK'D: RLE
JOB NO:
SHEET NO: 2

S:\Engineering Services\CABA\Production Drawings\AutoCAD Files\SG-2.dwg, 9/8/2010 4:13:51 PM, Adobe PDF

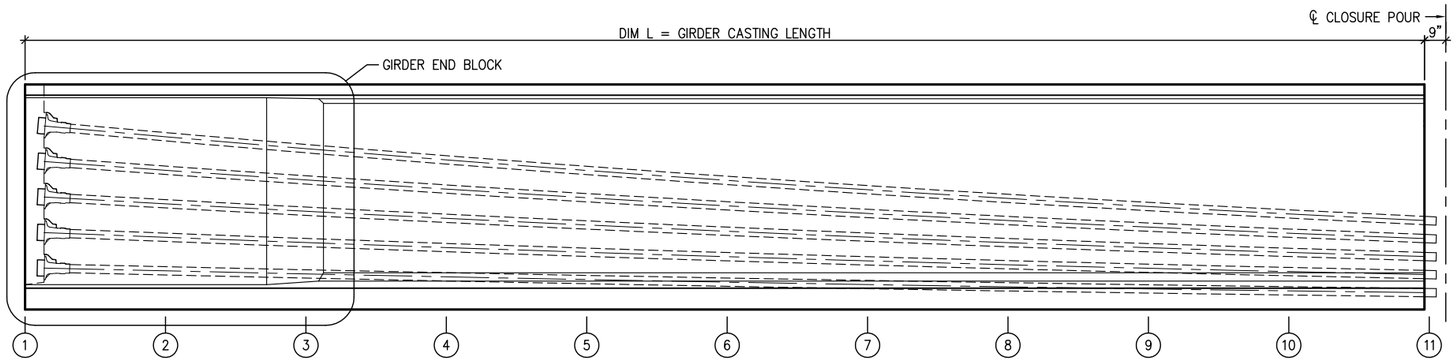

ELEVATION
SCALE: 3/16"=1'-0"

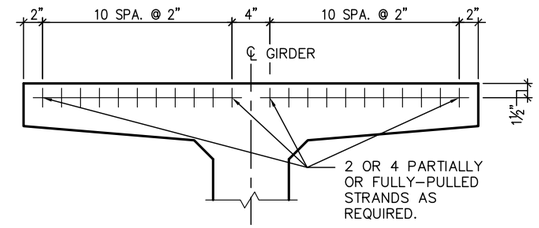

ALLOWABLE FLANGE STRAND LOCATIONS
SCALE: 3/4"=1'-0"

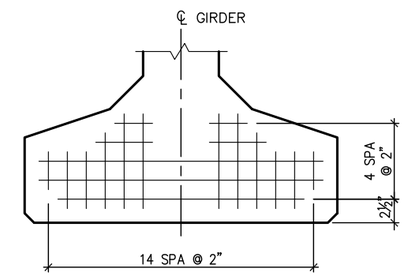

STRAND PATTERN
SCALE: 3/4"=1'-0"

POST-TENSIONING GEOMETRY – END SEGMENT											
POINT	1	2	3	4	5	6	7	8	9	10	11
DISTANCE FROM END (ft)											
TENDON	TENDON HEIGHT (in)										
1											
2											
3											
4											
5											

NOTES:

1. POST-TENSIONING WORK SHALL BE IN ACCORDANCE WITH PENNDOT SPECIFICATIONS, PUBLICATION 408/2007, SECTION 1108 -POST-TENSIONING OPERATIONS.
2. TENDON HEIGHTS ARE MEASURED FROM BOTTOM OF FORM TO CENTERLINE OF DUCT.
3. ALL POST-TENSIONING COMPONENTS SHALL BE PENNDOT APPROVED.
4. DUCT COUPLINGS SHALL BE POSITIVELY SEALED TO PROHIBIT THE INTRUSION OF CEMENTITIOUS MATERIAL INTO THE DUCTS.
5. ANCHOR CASTING GROUT OUTLET SHALL BE POSITIONED AT HIGH POINT OF INSTALLED CASTING.

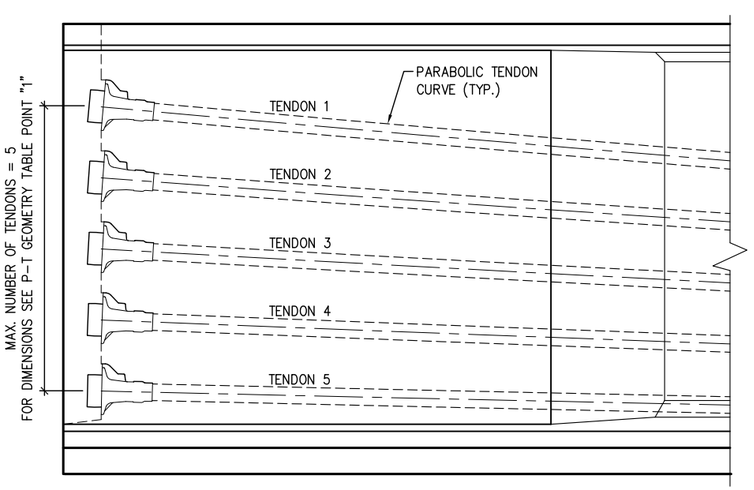

(SPIRALS NOT SHOWN FOR CLARITY)

GIRDER END BLOCK
SCALE: 3/8"=1'-0"

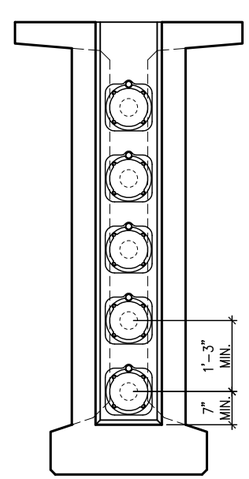

GIRDER END BLOCK
SCALE: 3/8"=1'-0"

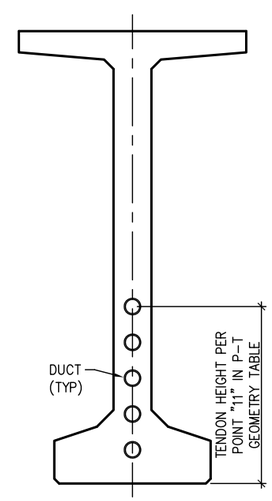

DUCTS @ LOW POINT
SCALE: 3/8"=1'-0"

DEC. 21 2010 PENNDOT DRAWING C9-601-BQAD

COMMONWEALTH OF PENNSYLVANIA
REGISTERED PROFESSIONAL
ROY L. ERIKSSON
ENGINEER
PE 077232
08-31-10

CENTRAL ATLANTIC BRIDGE ASSOCIATES (CABA)	Eriksson technologies 813.989.3317 TAMPA, FL LRFD.COM	
COMMONWEALTH OF PENNSYLVANIA DEPARTMENT OF TRANSPORTATION	DATE: 08/31/10	
	SCALE: AS SHOWN	
SPLICED PRESTRESSED CONCRETE GIRDER STANDARDS	DWN: CWS	CK'D: RLE
	JOB NO:	
PRESTRESSING – END SEGMENT	SHEET NO: 3	

S:\Engineering Services\CABA\Production Drawings\AutoCAD Files\SG-3.dwg, 9/8/2010 4:13:45 PM, Adobe PDF

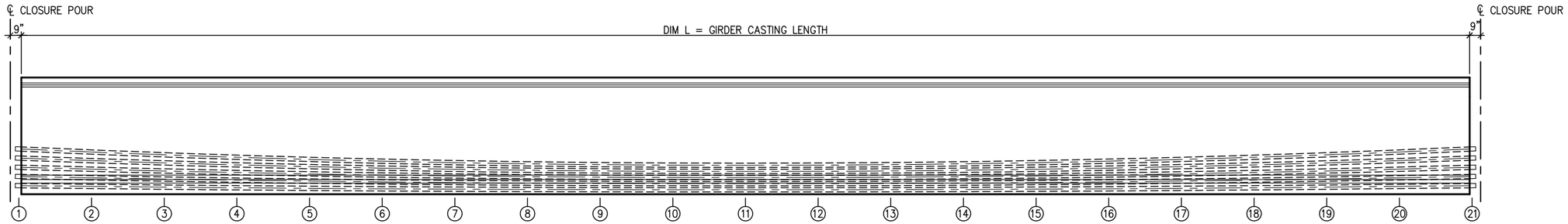

ELEVATION
SCALE: 1/8"=1'-0"

POST-TENSIONING GEOMETRY – MID SEGMENT																					
POINT	1	2	3	4	5	6	7	8	9	10	11	12	13	14	15	16	17	18	19	20	21
DISTANCE FROM END (ft)																					
TENDON	TENDON HEIGHT (in)																				
1																					
2																					
3																					
4																					
5																					

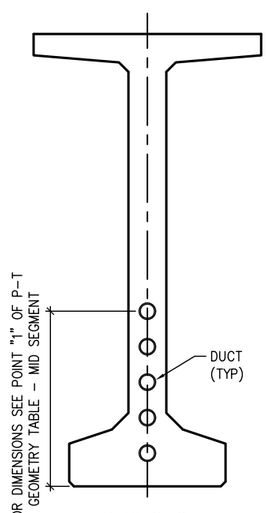

DUCTS @ GIRDER ENDS
SCALE: 3/8"=1'-0"

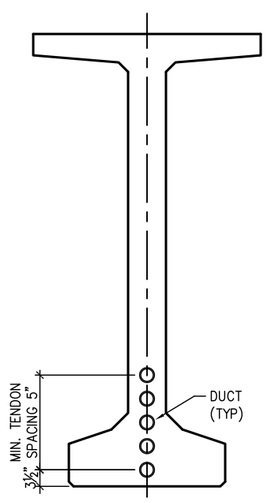

DUCTS @ GIRDER MID-POINT
SCALE: 3/8"=1'-0"

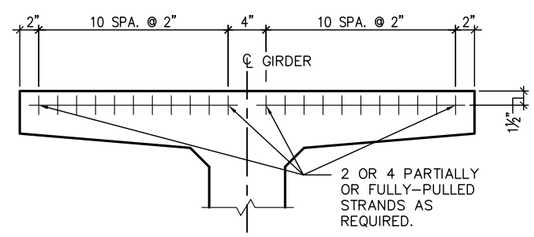

ALLOWABLE FLANGE STRAND LOCATIONS
SCALE: 3/4"=1'-0"

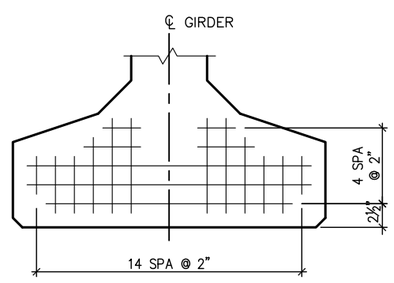

STRAND PATTERN
SCALE: 3/4"=1'-0"

NOTES:

1. PRETENSIONING STRANDS:
ASTM A416, GRADE 270, LOW-RELAXATION
MODULUS OF ELASTICITY: 28,000 KSI

DEC. 21 2010

PENNDOT DRAWING 09-601-BQAD

COMMONWEALTH OF PENNSYLVANIA
REGISTERED PROFESSIONAL
ROY L. ERIKSSON
ENGINEER
PE 077232

08-31-10

CENTRAL ATLANTIC BRIDGE ASSOCIATES (CABA)	Eriksson technologies 813.989.3317 TAMPA, FL LRFD.COM	
COMMONWEALTH OF PENNSYLVANIA DEPARTMENT OF TRANSPORTATION	DATE: 08/31/10	
	SCALE: AS SHOWN	
SPLICED PRESTRESSED CONCRETE GIRDER STANDARDS	DWN: CWS	CK'D: RLE
	JOB NO:	
PRETRESSING – MID SEGMENT	SHEET NO: 4	

S:\Engineering Services\CABA\Production Drawings\AutoCAD Files\SG-4.dwg, 9/8/2010 4:13:38 PM, Adobe PDF

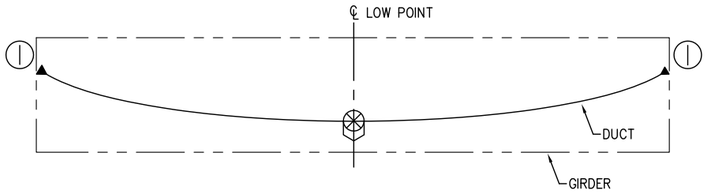

GROUT VENT PLACEMENT DIAGRAM

NOT TO SCALE

LEGEND	
①	GROUT OUTLET
⊗	GROUT INLET/DRAIN

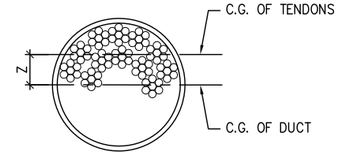

TENDON	DUCT I.D. (IN)	Z (IN)
7 – 0.6 STRANDS	2.32	0.36
12 – 0.6 STRANDS	3.00	0.48

TENDON ECCENTRICITY

NOT TO SCALE

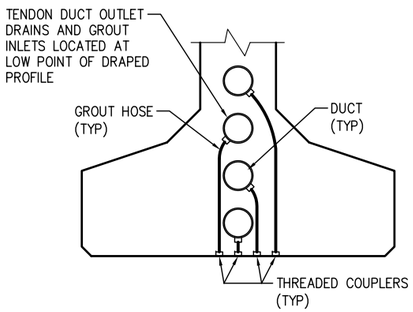

GROUT VENT PLACEMENT DIAGRAM

SCALE: 3/4"=1'-0"

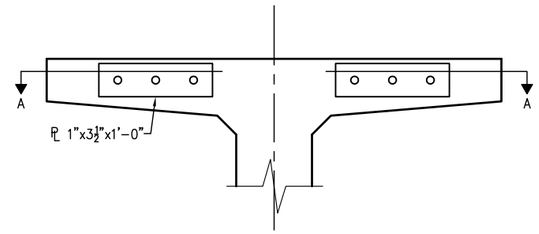

TEMPORARY TOP STRANDS

SCALE: 3/4"=1'-0"

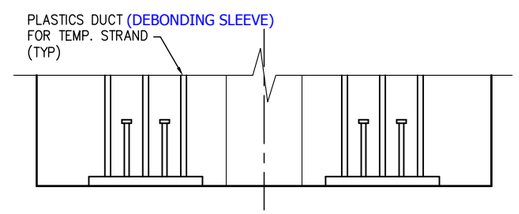

SECTION A–A

SCALE: 3/4"=1'-0"

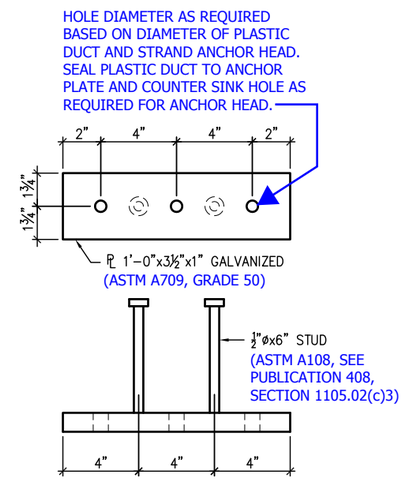

PLATE DETAIL

SCALE: 1-1/2"=1'-0"

NOTE: TEMPORARY TOP STRANDS SHALL NOT BE REMOVED UNTIL GIRDER HAS BEEN SET IN ITS FINAL LOCATION IN THE BRIDGE AND HAS BEEN ADEQUATELY BRACED. CHUCKS FOR TEMPORARY STRANDS MAY BE REMOVED USING AN ACETYLENE TORCH, EXERCISING EXTREME SAFETY PRECAUTIONS. AFTER DETENSIONING TOP TEMPORARY STRANDS, DUCTS SHALL BE SEALED AT EACH END WITH APPROVED CAULKING. USE A CAULK LISTED IN BULLETIN 15, SECTION 705.8(b).

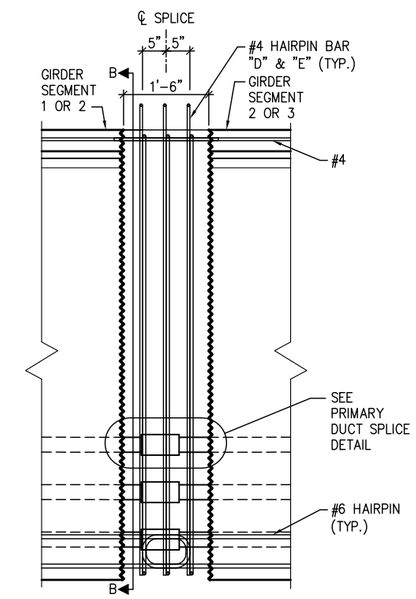

(BEAM REINFORCEMENT NOT SHOWN FOR CLARITY)

DUCT SPLICE @ CLOSURE POUR

SCALE: 3/8"=1'-0"

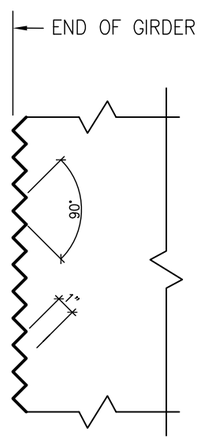

SAWTOOTH DETAIL

SCALE: 1 1/2"=1'-0"

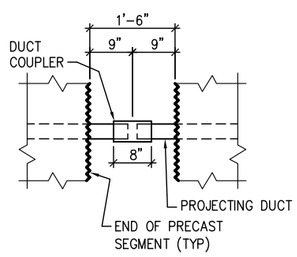

DUCT SPLICE DETAIL

SCALE: 3/8"=1'-0"

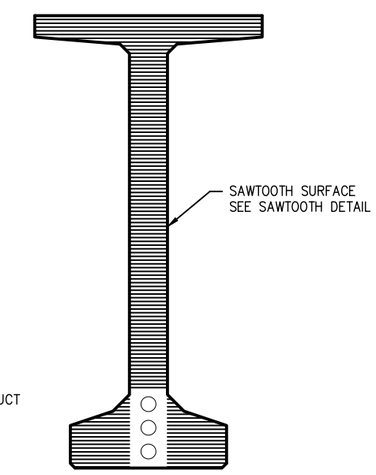

VIEW B–B

SCALE: 3/8" = 1'-0"

CORRECTIONS MADE BY BRIDGE QUALITY ASSURANCE DIVISION ON 12-10-2010

DEC. 21 2010

PENNDOT DRAWING 09-601-BQAD

COMMONWEALTH OF PENNSYLVANIA REGISTERED PROFESSIONAL ROY L. ERIKSSON ENGINEER PE 077232

08-31-10

CENTRAL ATLANTIC BRIDGE ASSOCIATES (CABA)	Eriksson technologies 813.989.3317 TAMPA, FL LRFD.COM	
COMMONWEALTH OF PENNSYLVANIA DEPARTMENT OF TRANSPORTATION	DATE: 11/16/10	
	SCALE: AS SHOWN	
SPLICED PRESTRESSED CONCRETE GIRDER STANDARDS	DWN: CWS	CK'D: RLE
	JOB NO:	
PRESTRESSING – MISCELLANEOUS	SHEET NO: 5	

S:\Engineering Services\CABA\Production Drawings\AutoCAD Files\SG-5.dwg, 11/16/2010 3:18:35 PM, Adobe PDF

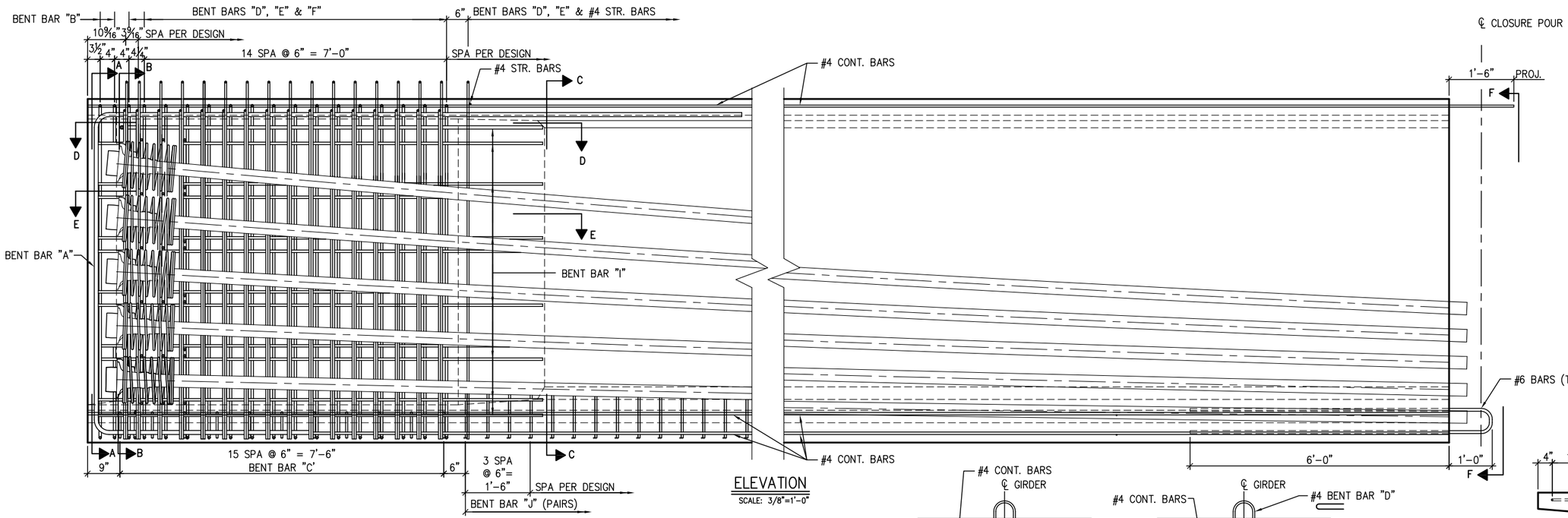

ELEVATION
SCALE: 3/8"=1'-0"

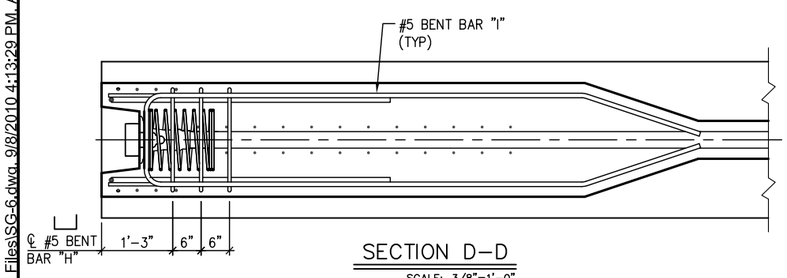

SECTION D-D
SCALE: 3/8"=1'-0"

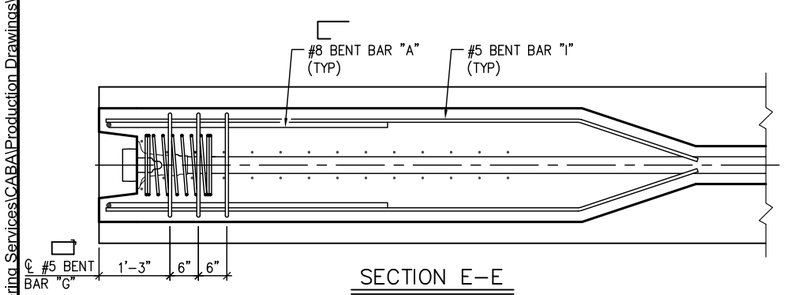

SECTION E-E
SCALE: 3/8"=1'-0"

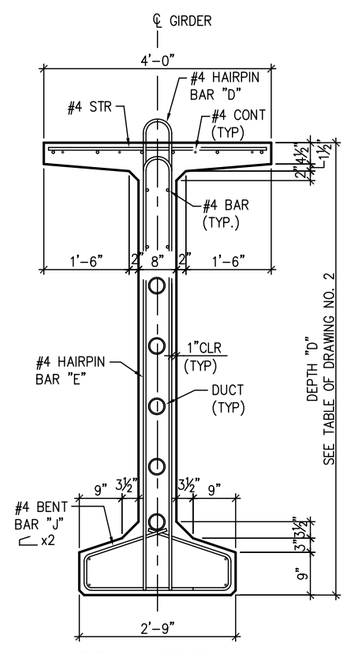

TYPICAL SECTION
SECTION C-C
SCALE: 3/8"=1'-0"

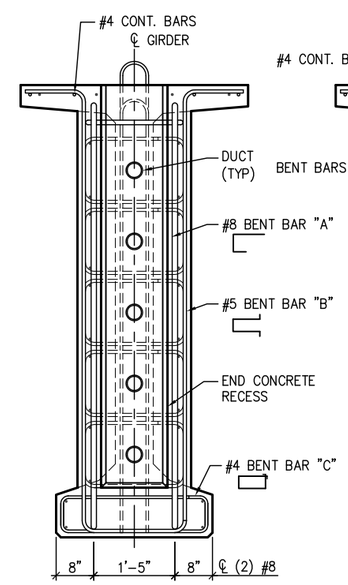

SECTION A-A
SCALE: 3/8"=1'-0"

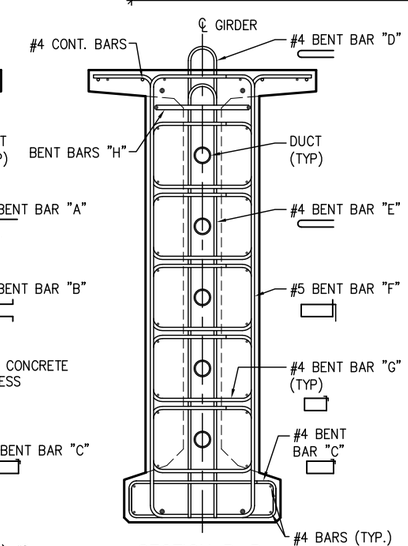

SECTION B-B
SCALE: 3/8"=1'-0"

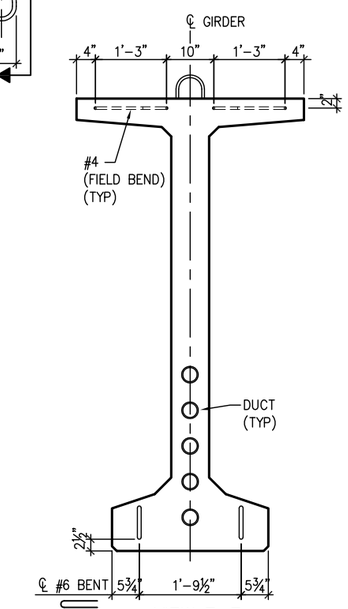

VIEW F-F
SCALE: 3/8"=1'-0"

DEC. 21 2010

PENNDOT DRAWING 09-601-BQAD

COMMONWEALTH OF PENNSYLVANIA REGISTERED PROFESSIONAL ROY L. ERIKSSON ENGINEER PE 077232
08-31-10

CENTRAL ATLANTIC BRIDGE ASSOCIATES (CABA)	Eriksson technologies 813.989.3317 TAMPA, FL LRFD.COM
COMMONWEALTH OF PENNSYLVANIA DEPARTMENT OF TRANSPORTATION	DATE: 08/31/10
	SCALE: AS SHOWN
SPLICED PRESTRESSED CONCRETE GIRDER STANDARDS	DWN: CWS CK'D: RLE
	JOB NO:
END SEGMENT REINFORCEMENT	SHEET NO: 6

S:\Engineering Services\CABA\Production Drawings\AutoCAD Files\SG-6.dwg, 9/8/2010 4:13:29 PM, Adobe PDF

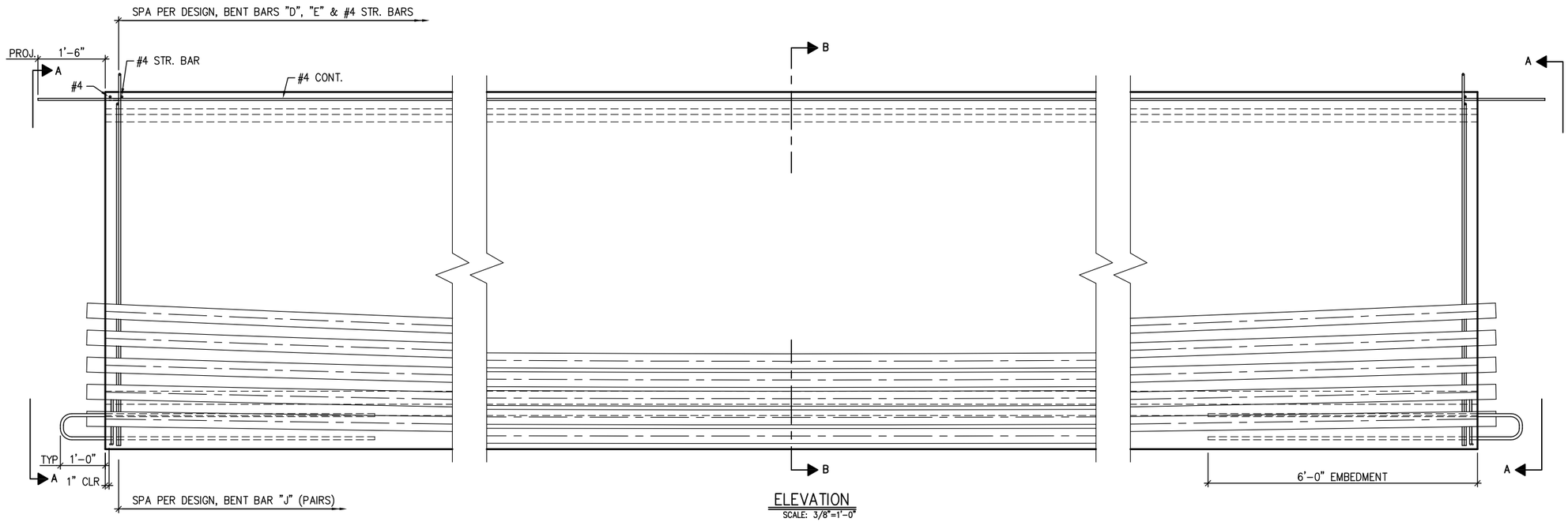

ELEVATION
SCALE: 3/8"=1'-0"

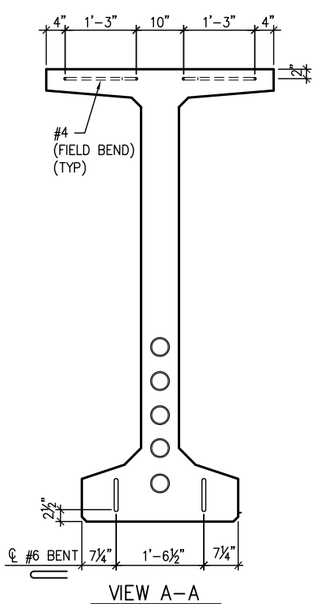

VIEW A-A
SCALE: 3/8"=1'-0"

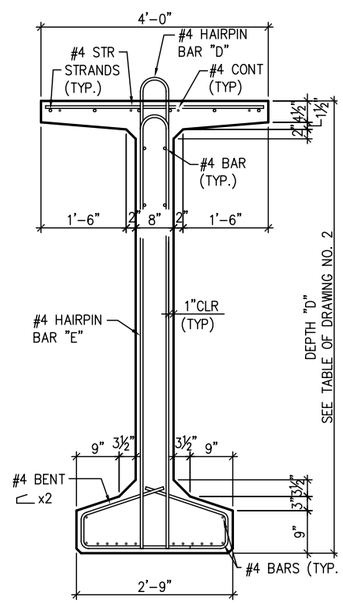

(DUCTS NOT SHOWN FOR CLARITY)

TYPICAL SECTION
SECTION B-B
SCALE: 3/8"=1'-0"

DEC. 21 2010 PENNDOT DRAWING 09-601-BQAD

COMMONWEALTH OF PENNSYLVANIA
REGISTERED PROFESSIONAL
ROY L. ERIKSSON
ENGINEER
PE 077232

08-31-10

CENTRAL ATLANTIC BRIDGE ASSOCIATES (CABA)	Eriksson technologies 813.989.3317 TAMPA, FL LRFD.COM	
COMMONWEALTH OF PENNSYLVANIA DEPARTMENT OF TRANSPORTATION	DATE: 08/31/10	
	SCALE: AS SHOWN	
SPLICED PRESTRESSED CONCRETE GIRDER STANDARDS	DWN: CWS	CK'D: RLE
	JOB NO:	
MID SEGMENT REINFORCEMENT	SHEET NO: 7	

S:\Engineering Services\CABA\Production Drawings\AutoCAD Files\SG-7.dwg, 9/8/2010 4:13:20 PM, Adobe PDF

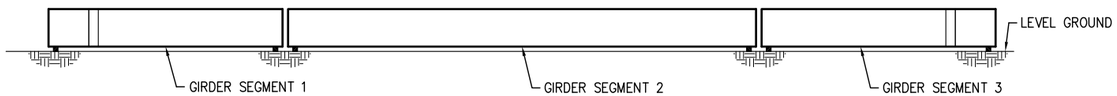

STAGE 1:
PLACE GIRDER SEGMENTS ON DUNAGE.

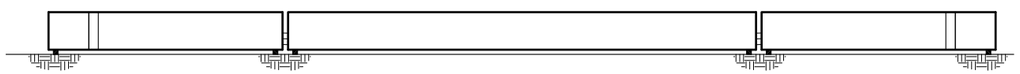

STAGE 2:
SPLICE DUCTS

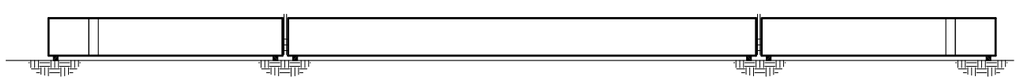

STAGE 3:
PLACE REINFORCING STEEL IN CLOSURE POURS.

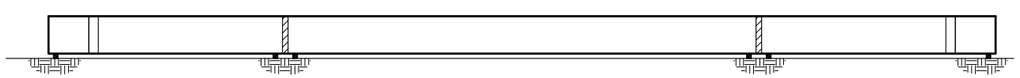

STAGE 4:
CAST AND CURE CLOSURE POURS.

NOTES:
- FOR SEGMENT ALIGNMENT AND TOLERANCE, SEE SHEET SG-1 AND SG-2.
- FOR HANDLING AND ERECTION OF THE SEGMENT AND GIRDER, SEE SHEET SG-1, NOTE 6.

STAGE 5:
INSTALL AND STRESS PT TENDONS IN THE ORDER AND AT THE BEAM END(S) REQUIRED BY CALCULATION.

STAGE 6:
INSTALL GROUT CAPS.

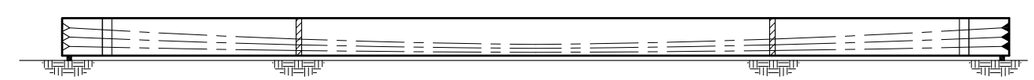

STAGE 7:
GROUT PT TENDONS AND GROUT CAPS.

STAGE 8:
PATCH ENDS WITH EPOXY-MODIFIED GROUT. COAT EXPOSED ENDS WITH ELASTOMERIC SYSTEM.

DEC. 21 2010 PENNDOT DRAWING 09-601-BQAD

COMMONWEALTH OF PENNSYLVANIA
REGISTERED PROFESSIONAL
ROY L. ERIKSSON
ENGINEER
PE 077232

08-31-10

CENTRAL ATLANTIC BRIDGE ASSOCIATES (CABA)	Eriksson technologies	813.989.3317 TAMPA, FL LRFD.COM
COMMONWEALTH OF PENNSYLVANIA DEPARTMENT OF TRANSPORTATION	DATE: 08/31/10	
	SCALE: N/A	
SPLICED PRESTRESSED CONCRETE GIRDER STANDARDS	DWN: CWS	CK'D: RLE
	JOB NO:	
SEGMENT ASSEMBLY – GROUND	SHEET NO: 8	

S:\Engineering Services\CABA\Production Drawings\AutoCAD Files\SG-8.dwg, 8/31/2010 4:17:33 PM, Adobe PDF

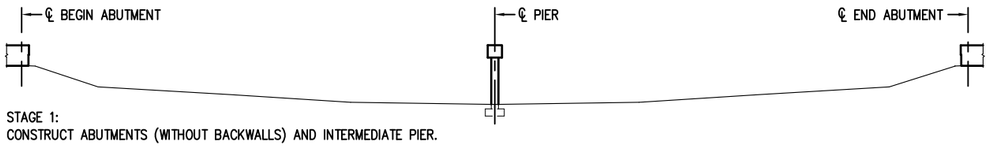

STAGE 1:
CONSTRUCT ABUTMENTS (WITHOUT BACKWALLS) AND INTERMEDIATE PIER.

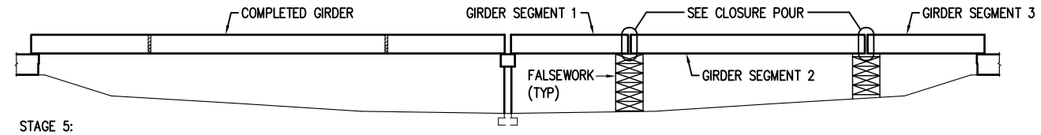

STAGE 5:
ERECT TEMPORARY FALSEWORK AND GIRDER SEGMENTS FOR SPAN 2.
INSTALL TEMPORARY CROSS BRACING FOR SPAN 2.

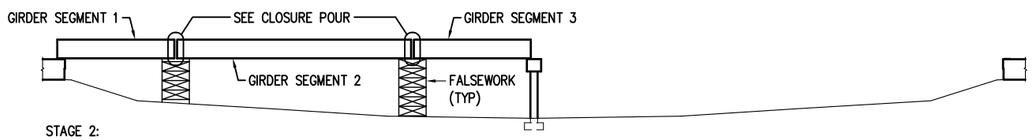

STAGE 2:
ERECT TEMPORARY FALSEWORK AND GIRDER SEGMENTS FOR SPAN 1.
INSTALL TEMPORARY CROSS BRACING FOR SPAN 1.

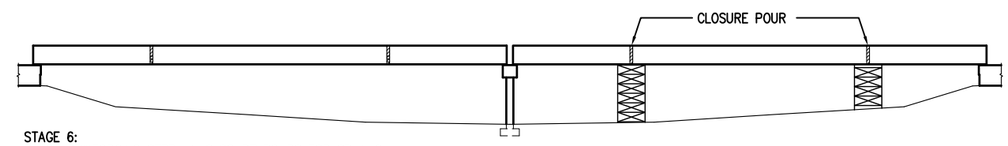

STAGE 6:
PLACE REINFORCING STEEL IN CLOSURE POURS FOR SPAN 2.
CAST AND CURE CLOSURE POURS FOR SPAN 2.

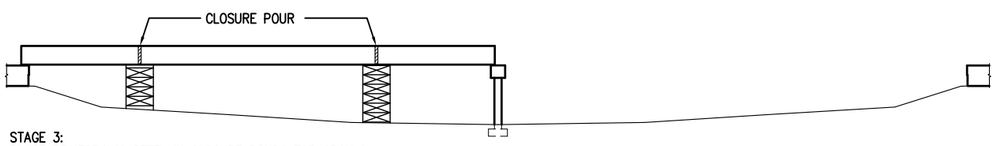

STAGE 3:
PLACE REINFORCING STEEL IN CLOSURE POURS FOR SPAN 1.
CAST AND CURE CLOSURE POURS FOR SPAN 1.

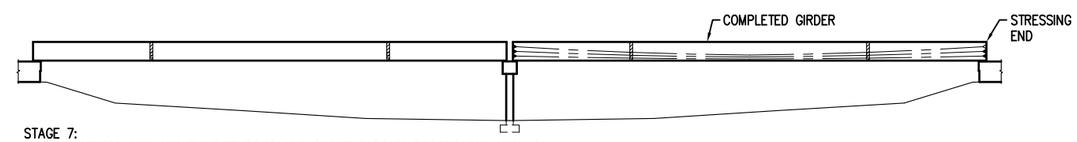

STAGE 7:
INSTALL, STRESS AND GROUT PT TENDONS AND GROUT CAPS IN GIRDERS FOR SPAN 2.
PATCH ENDS WITH EPOXY-MODIFIED GROUT. COAT EXPOSED ENDS WITH ELASTOMERIC SYSTEM.

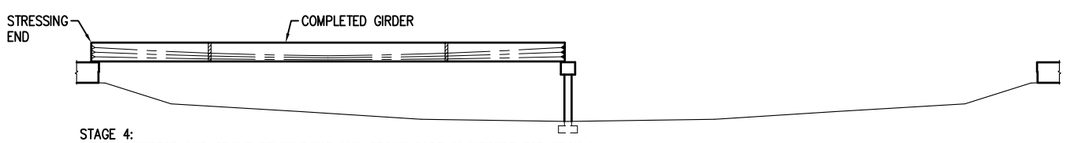

STAGE 4:
INSTALL, STRESS AND GROUT PT TENDONS AND GROUT CAPS IN GIRDERS FOR SPAN 1.
PATCH ENDS WITH EPOXY-MODIFIED GROUT. COAT EXPOSED ENDS WITH ELASTOMERIC SYSTEM.

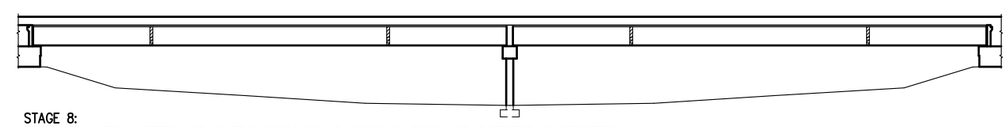

STAGE 8:
FORM AND INSTALL STEEL AND CAST DIAPHRAGMS, BACKWALLS, DECK AND BARRIERS AS REQUIRED.

NOTES:
- SUBMIT FALSEWORK CALCULATION AND DRAWING IN ACCORDANCE WITH PUBLICATION 408, SECTION 105.03(C).

DEC. 21 2010 PENNDOT DRAWING 09-601-BQAD

COMMONWEALTH OF PENNSYLVANIA
REGISTERED PROFESSIONAL
ROY L. ERIKSSON
ENGINEER
PE 077232

08-31-10

CENTRAL ATLANTIC BRIDGE ASSOCIATES (CABA)	Eriksson technologies	813.989.3317 TAMPA, FL LRFD.COM
COMMONWEALTH OF PENNSYLVANIA DEPARTMENT OF TRANSPORTATION	DATE: 08/31/10	
	SCALE: N/A	
SPLICED PRESTRESSED CONCRETE GIRDER STANDARDS	DWN: CWS	CK'D: RLE
	JOB NO:	
ERECTION SCHEME – FALSEWORK	SHEET NO: 9	

S:\Engineering Services\CABA\Production Drawings\AutoCAD Files\SG-9.dwg, 8/31/2010 3:56:18 PM, Adobe PDF

GROUT SPECIFICATIONS

DESCRIPTION – THIS WORK IS GROUTING OF POST–TENSIONING TENDONS IN CONCRETE STRUCTURES. THIS SPECIFICATION APPLIES TO ALL GROUTED POST–TENSIONING OPERATIONS IN BRIDGE SUPERSTRUCTURE AND SUBSTRUCTURE, INCLUDING BOX–GIRDERS, I–GIRDERS, SEGMENTAL GIRDERS, SPLICED GIRDERS, PIER CAPS, AND PIERS.

FOR GROUTING, ONLY PREPACKAGED GROUTS USED WITHIN 150 DAYS OF MANUFACTURE MAY BE USED. A PREPACKAGED GROUT IS ANY DRY BLEND OF THE LISTED MATERIALS FOUND IN CEMENT GROUT PRODUCED AND PACKAGED BY A COMMERCIAL GROUT MANUFACTURER. PROVIDE PREPACKAGED GROUT IN PLASTIC–LINED OR COATED BAGS. PRINT ON EACH BAG: APPLICATION, DATE OF MANUFACTURE, LOT NUMBER AND MIXING INSTRUCTIONS, INCLUDING THE MINIMUM AND MAXIMUM WATER CONTENT. IN ADDITION, SUBMIT TEST VALUES FOR ALL REQUIREMENTS IN THIS SECTION AT BOTH THE MINIMUM AND MAXIMUM WATER CONTENT TO THE DEPARTMENT

MATERIAL

(A) CEMENT

1. PORTLAND CEMENT. TYPE I OR II CEMENT CONFORMING TO AASHTO M–85, STANDARD SPECIFICATION FOR PORTLAND CEMENT. FOR VERTICAL GROUT APPLICATIONS ONLY, TYPE III CEMENT MAY BE PERMITTED ONLY UPON THE RECOMMENDATION OF THE GROUTING SPECIALIST OR THE SUBCONTRACTOR WHEN ACCOMPANIED BY ACCEPTABLE TESTS OF GROUT AND GROUTING PROCEDURES.

2. BLENDED CEMENT. CONFORMING TO AASHTO M–240, STANDARD SPECIFICATION FOR BLENDED HYDRAULIC CEMENTS.

(B) WATER

SECTION 720.1. LESS THAN 500 PPM OF CHLORIDE IONS WITHOUT PRESENCE OF ORGANIC MATERIALS.

(C) MINERAL ADDITIVES

1. FLY ASH. CLASS "C" OR CLASS "F" FLY ASH IN ACCORDANCE WITH AASHTO M–295, COAL FLY ASH OR CALCINED NATURAL POZZOLAN FOR USE AS A MINERAL ADMIXTURE IN PORTLAND CEMENT CONCRETE. THE AMOUNT OF FLY ASH GENERALLY VARIES BETWEEN 10% – 30% OF THE PORTLAND CEMENT BY WEIGHT (MASS). SUBMIT A MATERIAL SAFETY DATA SHEET (MSDS). CERTIFY AS SPECIFIED IN SECTION 106.03 (B) 3.

2. GROUND GRANULATED BLAST FURNACE SLAG. GRADE 120 SLAG IN ACCORDANCE WITH AASHTO M–302, GROUND GRANULATED BLAST FURNACE SLAG FOR USE IN CONCRETE AND MORTARS. THE AMOUNT OF SLAG GENERALLY VARIES BETWEEN 30% – 55% OF THE PORTLAND CEMENT CONTENT BY WEIGHT (MASS). CERTIFY AS SPECIFIED IN SECTION 106.03 (B) 3.

3. SILICA FUME. AASHTO M–307 "SILICA FUME FOR USE IN HYDRAULIC CEMENT CONCRETE AND MORTAR." THE AMOUNT OF SILICA FUME GENERALLY VARIES BETWEEN 3% – 10% OF THE PORTLAND CEMENT BY WEIGHT (MASS). IF USED, SHOW THAT SILICA FUME PARTICLES DO NOT AGGLOMERATE THROUGH THE EVALUATION OF THE HARDENED GROUT. CERTIFY AS SPECIFIED IN SECTION 106.03 (B) 3.

(D) CHEMICAL ADMIXTURES

1. SET CONTROLLING. TYPE D – WATER–REDUCING AND RETARDING ADMIXTURES, TYPE E – NON–CHLORIDE WATER–REDUCING AND ACCELERATING ADMIXTURES, TYPE F – WATER REDUCING HIGH–RANGE ADMIXTURES, AND TYPE G – WATER–REDUCING HIGH–RANGE AND RETARDING ADMIXTURES IN ACCORDANCE WITH AASHTO M–194, STANDARD SPECIFICATION FOR CHEMICAL ADMIXTURES FOR CONCRETE. USE TYPES F AND G ONLY UP TO 3 LITERS PER 100 KG (45 OZ PER 100 LB) OF PORTLAND CEMENT.

2. ANTI–BLEED. USE IN GROUT IF NECESSARY TO SATISFY THE TESTING REQUIREMENTS UNDER QUALITY CONTROL. USE NON–CORROSIVE ADMIXTURES.

3. EXPANSIVE AGENTS. USE ONLY INERT GAS FORMING ADMIXTURES. AVOID ANY GAS FORMING SYSTEM THAT PRODUCES HYDROGEN, CARBON DIOXIDE, OXYGEN OR AIR. WHEN INERT GAS IS FORMED, THE LEVEL OF VERTICAL HEIGHT CHANGE SHALL BE NO GREATER THAN 2.0% UP TO 3 HOURS CONFORMING TO ATSM C940, STANDARD TEST METHOD FOR EXPANSION AND BLEEDING OF FRESHLY MIXED GROUTS FOR PRE–PLACED AGGREGATE CONCRETE IN THE LABORATORY. IF THE CEMENT SOURCE OR COMPOSITION CHANGES, RETEST THE MATERIAL.

4. CORROSION INHIBITORS. CORROSION INHIBITORS ARE PROHIBITED.

(E) AGGREGATE

, TYPE A,

FINE AGGREGATE WITH A MAXIMUM SIZE OF 1 MM (.039 IN), CONFORMING TO ASTM C33, STANDARD SPECIFICATION FOR CONCRETE AGGREGATES, EXCEPT FOR GRADATION. FROM A SOURCE LISTED IN BULLETIN 14 OR APPROVED BY MTD.

(F) FILLERS ARE NOT PERMITTED IN GROUT.

TESTING AND ACCEPTANCE

(A) TESTING FACILITIES AND EQUIPMENT

PROVIDE SUFFICIENT THERMOMETERS AND EQUIPMENT NEEDED FOR REQUIRED TESTS. HAVE BACK–UP EQUIPMENT AVAILABLE TO ENSURE THAT NO TESTS ARE MISSED. PROVIDE SUFFICIENT INCIDENTAL EQUIPMENT SUCH AS BUCKETS, SCOOPS, ETC., AS NEEDED. PROPERLY MAINTAIN ALL EQUIPMENT USED FOR TESTING. HAVE SCALES, BALANCES, AND THE COMPRESSION MACHINE CALIBRATED AT LEAST ONCE PER YEAR BY AN INDEPENDENT AGENCY ACCEPTABLE TO THE DEPARTMENT. RE–CALIBRATE THE COMPRESSION MACHINE WHEN RELOCATED. MAINTAIN ACCURATE RECORDS OF CALIBRATION. IF THE COMPRESSION MACHINE IS OUT OF TOLERANCE OR MALFUNCTIONS, RETURN IT TO WORKING ORDER WITHIN 24 HOURS OR SUPPLY A BACK–UP MACHINE UNTIL THE PROBLEM IS CORRECTED.

(B) PRE–QUALIFICATION TESTING

PREQUALIFY ALL PREPACKAGED GROUTS IN ACCORDANCE WITH THE REQUIREMENTS OF TABLE A: PERFORMANCE REQUIREMENTS FOR INCLUSION IN BULLETIN 15.

SUBMIT TEST REPORT OF PREPACKAGED GROUTS SHOWING CONFORMANCE TO TABLE A: PERFORMANCE REQUIREMENTS AT THE MAXIMUM AND MINIMUM ALLOWABLE WATER–CEMENTITIOUS MATERIALS RATIO AS STATED ON THE BAG. RETEST AND CERTIFY PREPACKAGED GROUTS A MINIMUM OF EVERY 2 YEARS ~~FOR INCLUSION IN BULLETIN 15~~. SUBMIT SEPARATE TEST REPORTS FOR EACH PLANT PRODUCING GROUT. ALSO RETEST PREPACKAGED GROUTS WHEN THERE IS A CHANGE OF MATERIAL OR MATERIAL SOURCE. USE GROUT FROM ONE PLANT FOR ANY GIVEN PROJECT LOCATION. STATE ON THE BAG THE METHOD OF FLOW CONE TESTING (STANDARD OR MODIFIED) USED TO TEST GROUT FLUIDITY. ONCE A PREPACKAGED GROUT IS PREQUALIFIED WITHIN THE TWO YEAR PERIOD, THE ONLY TESTING REQUIRED FROM THE LIST BELOW FOR A SPECIFIC PROJECT LOCATION IS QUALITY CONTROL TESTING AS GIVEN IN SECTION (1). ALL GROUTS SHOULD BE USED WITHIN THE SPECIFIED SHELF–LIFE AS GIVEN BY THE MANUFACTURER.

1. SETTING TIME TEST. ASTM C953, STANDARD TEST METHOD FOR TIME OF SETTING OF GROUTS FOR PREPLACED AGGREGATE CONCRETE IN THE LABORATORY. FOR STIFFER PASTE MIXES, FOLLOW AASHTO T–131, STANDARD TEST METHOD FOR TIME OF SETTING OF HYDRAULIC CEMENT BY VICAT NEEDLE.

2. GROUT STRENGTH TEST. ASTM C942, STANDARD TEST METHOD FOR COMPRESSIVE STRENGTH OF GROUTS FOR PREPLACED–AGGREGATE CONCRETE IN THE LABORATORY. IF THE GROUT IS EXPANSIVE, COVER CUBES WITH WEIGHTED PLATES SUFFICIENT TO CONTAIN THE EXPANSION DURING CURE.

3. PERMEABILITY TEST. MODIFIED VERSION OF AASHTO T–277, TEST METHOD FOR ELECTRICAL INDICATION OF CONCRETE'S ABILITY TO RESIST CHLORIDE ION PENETRATION. USE A VOLTAGE OF 30 V.

4. VOLUME CHANGE TEST – ASTM C1090, STANDARD TEST METHOD FOR MEASURING CHANGES IN HEIGHT OF CYLINDRICAL SPECIMEN FROM HYDRAULIC–CEMENT GROUT.

5. THIXOTROPIC GROUT PUMPABILITY AND FLUIDITY TEST – MODIFIED VERSION OF ASTM C939. FILL THE FLOW CONE TO THE TOP WITH GROUT AND MEASURE THE EFFLUX TIME TO FILL ONE LITER.

6. WICK INDUCED BLEED TEST – MODIFIED VERSION OF ASTM C940. INCLUDE ONE STRAND IN THE CONTAINER AND RUN THE TEST AT A NOMINAL AMBIENT ROOM TEMPERATURE OF APPROXIMATELY 20° C (70° F) AS PER THE GUIDE SPECIFICATION FOR GROUTING OF POST – TENSIONED STRUCTURES PUBLISHED BY THE POST – TENSIONING INSTITUTE.

7. SCHUPACK PRESSURE BLEED TEST – FOLLOW APPENDIX C OF GUIDE SPECIFICATION FOR GROUTING OF POST – TENSIONED STRUCTURES, PUBLISHED BY THE POST – TENSIONING INSTITUTE.

8. ACCELERATED CORROSION TEST (ACT) – FOLLOW APPENDIX B OF THE GUIDE SPECIFICATION FOR GROUTING OF POST – TENSIONED STRUCTURES, PUBLISHED BY THE POST – TENSIONING INSTITUTE.

9. API MUD BALANCE TEST – API RECOMMENDED PRACTICE 13B–1, STANDARD PROCEDURES FOR FIELD TESTING WATER–BASED DRILLING FLUIDS. THE MUD BALANCE APPARATUS SHOULD BE NON–REACTIVE WITH THE GROUT.

10. CHLORIDE ION CONTENT – AASHTO T–260, STANDARD TEST METHOD FOR ACID SOLUBLE CHLORIDE IN MORTAR AND CONCRETE.

11. INCLINED TUBE BLEED TEST - GROUT BLEEDING SHALL NOT EXCEED 0.3% OF THE INITIAL VOLUNE OF THE GROUT AFTER THREE HOURS KEPT AT REST. THE INLINED TUBETEST SHALL BE PERFORED WITH EN 445.

TABLE A: PERFORMANCE REQUIREMENTS

TEST	PERFORMANCE CRITERIA	TEST METHOD
SETTING TIME TEST	MIN. 3 HOURS; MAX 12 HOURS	ASTM C953*
GROUT STRENGTH TEST (AVERAGE OF 3 CUBES)	≥ 21 MPA (3,000 PSI) AT 7 DAYS, ≥ 35 MPA (5,000 PSI) AT 28 DAYS	ASTM C942
PERMEABILITY TEST (AT 28 DAYS)	MAX. 2,500 COULOMBS AT 30V AFTER 6 HOURS	MODIFIED AASHTO T–277
VOLUME CHANGE TEST	0.0% TO +0.1% AT 24 HOURS MAX. +0.2% AT 28 DAYS	ASTM C1090
THIXOTROPIC FLUIDITY TEST**	5 TO 20 SEC., IMMEDIATELY AFTER MIXING MAX. 30 SEC. 30 MIN AFTER MIXING WITH REMIXING FOR 30 SEC.	MODIFIED ASTM C939
WICK INDUCED BLEED TEST (AT 3 HOURS)	MAX. 0.0%	MODIFIED ASTM C940
SCHUPACK PRESSURE BLEED TEST	SEE TABLE B	
ACCELERATED CORROSION TEST (AVERAGE TIME TO CORROSION)	>0.45 W/CM, PLAIN GROUT USING SAME EQUIPMENT APPENDIX B GUIDE SPECIFICATION FOR GROUTING OF POST–TENSIONED STRUCTURES, PUBLISHED BY THE POST–TENSIONING INSTITUTE.	
API MUD BALANCE TEST	VALUE > 1.9	
CHLORIDE ION CONTENT	MAX. 0.08% BY WEIGHT OF CEMENTITIOUS MATERIAL	AASHTO T–260
INCLINED TUBE BLEED TEST	MAX 0.3% OF INITIAL VOLUME OF GROUT AFTER 3 HOURS	EN 445

*FOR STIFFER PASTE MIXES, FOLLOW AASHTO T–131.
**MEET EITHER THE STANDARD ASTM C939 FLOW CONE TEST OR THE MODIFIED TEST. ENSURE THAT THE BAG OF PREPACKAGED GROUT STATES WHICH TEST SHOULD BE USED.

CORRECTIONS MADE BY BRIDGE QUALITY ASSURANCE DIVISION ON 12-10-2010

CORRECTIONS MADE BY BRIDGE DESIGN AND TECHNOLOGY DIVISION ON 10-31-13 ON THE GROUT REQUIREMENTS TO MEET STATE OF PRACTICE

TABLE B: SCHUPACK PRESSURE TEST LIMITS
(BLEED UNDER PRESSURE LIMITS)

VERTICAL RISE, X (M)	SCHUPACK PRESSURE (KPA)	MAX % BLEED (% OF SAMPLE VOLUME)
0 ≤ X ≤ 0.6	140	4
0.6 < X ≤ 1.8	220	2
1.8 < X ≤ 6.1	360	0
6.1 < X < 30.0	700	0
VERTICAL RISE, X (FT)	SCHUPACK PRESSURE (PSI)	MAX% BLEED (% OF SAMPLE VOLUME)
0 ≤ X ≤ 2	20	4
2 < X ≤ 6	30	2
6 < X ≤ 20	50	0
20 < X < 100	100	0

NOTE: PRESSURE VALUES IN TABLE B ARE NOT HARD CONVERSIONS. REPORT RESULTS IN THE UNITS OF THE PRESSURE GAUGE USED.

(C) MATERIALS CERTIFICATION

PROVIDE WRITTEN CERTIFICATION FROM THE SOURCE OR THE MANUFACTURER OF ALL INGREDIENTS THAT ARE USED IN THE PREPARATION OF THE GROUT THAT THESE INGREDIENTS CONFORM TO THE MATERIAL SECTION OF THIS SPECIFICATION.

CONSTRUCTION

(A) GROUT TECHNICIAN

PROVIDE, AND ASSIGN TO THE WORK, AN AMERICAN SEGMENTAL BRIDGE INSTITUTE (ASBI) CERTIFIED GROUT TECHNICIAN TO CONTROL THE QUALITY OF THE MATERIALS USED, TO PERFORM REQUIRED GROUT TESTS, AND TO CONTROL THE OPERATIONS SO THAT THE GROUT COMPLIES WITH SPECIFICATIONS AT THE POINT OF PLACEMENT.

THE INSPECTOR DOES NOT ASSUME, BY ACT OR BY WORD, ANY RESPONSIBILITY FOR BATCH CONTROL ADJUSTMENTS; CALCULATIONS; OR FOR SETTING OF ANY DIALS, GAUGES, SCALES, OR METERS. FAILURE OF THE INSPECTOR TO REJECT GROUT DOES NOT RELIEVE THE CONTRACTOR'S OBLIGATION TO PROVIDE GROUT MEETING SPECIFICATIONS.

(B) INLETS AND OUTLETS

PROVIDE THE MINIMUM INNER DIAMETER OF INLETS AND OUTLETS WITH AT LEASE 20 MM (3/4 IN) FOR STRAND TENDONS AND 10 MM (3/8 IN) FOR SINGLE BAR TENDONS. PLACE INLETS AND OUTLETS AT LOCATIONS RECOMMENDED BY THE DESIGN OR CONSTRUCTION ENGINEER AND AT THE FOLLOWING LOCATIONS:

- AT THE ANCHORAGE AREA OF THE TENDON.
- AT THE HIGH POINTS OF THE DUCT, WHEN THE VERTICAL DISTANCE BETWEEN THE HIGHEST AND LOWEST POINT IS MORE THAN 0.5 M (20 IN)
- AN ADDITIONAL OUTLET AT A SHORT DISTANCE DOWNSTREAM (AT APPROXIMATELY THE LOCATION WHERE THERE HAS BEEN A VERTICAL DROP OF A DISTANCE EQUAL TO ONE DUCT DIAMETER) OF A HIGH POINT OUTLET.
- AT MAJOR CHANGES IN THE CROSS–SECTION OF THE DUCT, SUCH AS COUPLERS AND ANCHORAGES.
- AT ALL LOW POINTS (FREE – DRAINING).
- PRIMARY INLET: AT OR NEAR THE LOWEST POINT OF THE TENDON. USE A TWO LEVER–ACTION BALL VALVE.

PROVIDE INLETS AND OUTLETS WITH POSITIVE SHUT–OFFS AND CHECK TO BE SURE THEY CAN BE PROPERLY OPENED AND CLOSED.

NOTE: EITHER ALL METRIC OR ALL ENGLISH VALUES MUST BE USED ON PLANS. METRIC AND ENGLISH VALUES SHOWN MAY NOT BE MIXED.

DEC. 21 2010

PENNDOT DRAWING 09–601–BQAD

COMMONWEALTH OF PENNSYLVANIA REGISTERED PROFESSIONAL ROY L. ERIKSSON ENGINEER PE 077232

08-31-10

CENTRAL ATLANTIC BRIDGE ASSOCIATES (CABA)	Eriksson technologies 813.989.3317 TAMPA, FL LRFD.COM	
COMMONWEALTH OF PENNSYLVANIA DEPARTMENT OF TRANSPORTATION	DATE: 08/31/10	
	SCALE: N/A	
SPLICED PRESTRESSED CONCRETE GIRDER STANDARDS	DWN: CWS	CK'D: RLE
	JOB NO:	
GROUT SPECIFICATIONS	SHEET NO: 10	

S:\Engineering Services\CABA\Production Drawings\AutoCAD Files\SG-10.dwg, 8/31/2010 4:06:51 PM, Adobe PDF

(C) GROUTING EQUIPMENT

PROVIDE GROUTING EQUIPMENT THAT WILL GROUT THE LONGEST TENDON ON THE PROJECT IN LESS THAN 30 MINUTES ONCE MIXING BEGINS AND THAT WILL PROVIDE A CONTINUOUS SUPPLY OF HOMOGENOUS GROUT (UNLESS WAIVED BY THE ENGINEER FOR PROJECTS WITH VERY LARGE TENDONS). PLACE A SCREEN BETWEEN THE MIXER AND THE PUMP, OR BETWEEN THE MIXER AND THE STORAGE HOPPER. PROVIDE A BACKUP GROUT MIXER AND PUMP. WHERE WATER IS NOT SUPPLIED THROUGH THE PUBLIC WATER SUPPLY SYSTEM, PROVIDE A WATER STORAGE TANK OF SUFFICIENT CAPACITY AND PROVIDE APPROVED PRESSURIZED FLUSHING EQUIPMENT.

1. MIXER. USE THE MIXER TYPE PLANNED FOR PUMPING IN A FIELD TRIAL TO ENSURE PROPERTIES SIMILAR TO THOSE FROM PREQUALIFICATION TESTING WILL BE ACHIEVED AND TO DETERMINE OPTIMUM MIXING TIME.

- HIGH-SHEAR OR COLLOIDAL MIXER. MINIMUM 1,500 RPM.

2. STORAGE HOPPER. EQUIP THE STORAGE HOPPER WITH AN AGITATOR. KEEP THE STORAGE HOPPER PARTIALLY FULL AT ALL TIMES WHILE PUMPING TO AVOID PUMPING AIR INTO THE TENDON. IF AN ADDITIONAL STORAGE HOPPER IS NEEDED, PLACE IT BETWEEN THE MIXER AND PUMP AND EQUIP IT WITH AN AGITATOR.

3. SCREEN. MAXIMUM SCREEN OPENING OF 5 MM (0.188 IN).

4. GROUT INJECTION EQUIPMENT. USE EQUIPMENT WITH A SYSTEM THAT CAN RECIRCULATE THE GROUT WHILE GROUTING HAS TEMPORARILY STOPPED. PLACE A VALVE ON THE EQUIPMENT THAT CAN LOCK OFF THE TENDON UNDER PRESSURE ONCE THE DUCT IS COMPLETELY GROUTED.

- PUMP, USE A POSITIVE PRESSURE PUMP THAT CAN MAINTAIN AN OUTLET PRESSURE OF AT LEAST 1 MPA (145 PSI) USE A PUMP WITH SEALS TO KEEP OIL, AIR, AND OTHER SUBSTANCES OUT OF THE GROUT AND TO PREVENT ANY LOSS OF THE GROUT AND WATER.
- PRESSURE GAUGE. PLACE A PRESSURE GAUGE CAPABLE OF READING NO MORE THAN 2 MPA (OR 300 PSI IF AN ENGLISH SYSTEM GAUGE IS USED) BETWEEN THE PUMPING OUTLET AND THE DUCT INLET.

5. VACUUM GROUTING EQUIPMENT. IF INSPECTION INDICATES THAT REPAIRS ARE NEEDED, PROVIDE VACUUM GROUTING EQUIPMENT AT THE JOB SITE. USE VACUUM GROUTING EQUIPMENT OF THE VOLUMETRIC MEASURING TYPE WITH THE ABILITY TO MEASURE A VOID AND SUPPLY A MEASURED VOLUME OF GROUT TO FILL THE VOID.

6. COMPRESSED AIR. USE OIL-FREE AND WATER-FREE COMPRESSED AIR TO CHECK THE DUCTS FOR LEAKS AND TO EXPEL ANY EXCESS WATER BEFORE THE GROUTING OPERATION BEGINS.

(D) PROTECTION OF TENDONS PRIOR TO GROUTING

1. PRIOR TO INSTALLATION. CAP DUCTS TO PREVENT ENTRANCE OF MOISTURE, CHLORIDES, OR DEBRIS PRIOR TO INSTALLATION OF THE PRESTRESSING STRAND. LEAVE VENTS CLOSED UNTIL AIR TESTING.

2. AFTER INSTALLATION. PREVENT PRECIPITATION AND DEBRIS FROM ENTERING DUCTS AT ALL TIMES. IF STRAND WILL BE EXPOSED FOR MORE THAN 24 HOURS BETWEEN INSTALLATION AND STRESSING, WRAP STRAND ENDS AND THE ANCHORAGE OPENING WITH PLASTIC AND WATERPROOF TAPE TO PREVENT EXPOSURE TO MOISTURE AND CHLORIDES.

3. AFTER STRESSING. CAP AND COVER ANCHORAGES IMMEDIATELY AFTER STRAND TAILS ARE CUT TO PREVENT ENTRANCE OF MOISTURE OR CHLORIDES. AFTER TENDONS ARE AIR TESTED, CLOSE ALL VENTS AND INSTALL PERMANENT GROUT CAPS. PERMISSIBLE TIME LIMIT FOR EXPOSURE BETWEEN STRESSING AND GROUTING WITHOUT ADDITIONAL CORROSION PROTECTION IS 7 DAYS.

- ADDITIONAL CORROSION PROTECTION. IF THE TENDONS WILL NOT BE GROUTED WITHIN 7 DAYS FROM THE TIME OF STRESSING, ADDITIONAL CORROSION PROTECTION IS REQUIRED. ADDITIONAL PROTECTION MAY INCLUDE CORROSION-INHIBITING MATERIALS APPLIED TO THE STRAND PRIOR TO INSERTION IN THE DUCT, CORROSION INHIBITORS BLOWN INTO THE DUCT AFTER STRESSING, OR OTHER METHODS APPROVED BY THE ENGINEER. MATERIALS APPLIED TO THE STRAND MAY REDUCE BOND. TEST RESULTS SHOWING CORROSION PROTECTION AND DEGREE OF BOND REDUCTION IN PULL-OUT TESTS MUST BE PROVIDED TO THE ENGINEER PRIOR TO APPROVAL OF THE USE OF THE CORROSION - INHIBITING MATERIAL. THE MATERIAL MUST BE COMPATIBLE WITH GROUT. TENDONS SHOULD NOT BE FLUSHED WITH WATER PRIOR TO GROUTING.

(E) GROUTING PLAN

SUBMIT A GROUTING PLAN TO THE ENGINEER FOR REVIEW AND ACCEPTANCE AT LEAST 6 WEEKS PRIOR TO GROUTING. PERFORM A MOCK-UP TEST WITH THE EQUIPMENT AND MATERIALS THAT WILL BE USED ON THE JOB AND SUBMIT RESULTS WITH THE GROUTING PLAN. INCLUDE THE FOLLOWING IN THE GROUTING PLAN:

- NAMES, EXPERIENCE AND QUALIFICATIONS OF GROUTING CREW AND SUPERVISOR: ASBI CERTIFICATION DOCUMENTATION FOR THE TECHNICIAN AND BACKUP.
- TYPE OF EQUIPMENT (TYPE, SPEED, CAPACITY, INCLUDING BACK-UP EQUIPMENT).
- TARGETED FLOW RATE DURING PUMPING AND METHOD OF CONTROLLING RATE.
- TYPE OF GROUT AND WATER CONTENT THAT WILL BE USED FOR INITIAL ON-SITE MIX.
- ESTIMATED QUANTITY OF GROUT FOR EACH TENDON GROUP.
- MATERIALS CERTIFICATION.
- LIST OF ON-SITE TESTING AND FREQUENCY.
- INLET AND VENTING DETAILS (TYPE, LOCATION, SIZE).
- PLANS FOR PROTECTION OF TENDONS PRIOR TO GROUTING (PRIOR TO INSTALLATION AND AFTER INSTALLATION).
- PROVIDE A PLAN (ADDITIONAL PROTECTION) IF TENDONS WILL REMAIN UNGROUTED MORE THAN 7 DAYS.
- AIR TESTING PROCEDURE.
- GROUT MIXING AND PUMPING PROCEDURES.
- ORDER OF TENDON GROUTING.
- DIRECTION OF GROUTING AND SEQUENCE OF VENT SHUTOFF.
- PROCEDURES FOR BLOCKAGES (INCLUDING MEANS OF FLUSHING IF NECESSARY)
- PROCEDURES FOR INSPECTION OF TENDONS AFTER GROUTING.
- PROCEDURES FOR FILLING ANY VOIDS.
- SAMPLE GROUTING RECORD FORMS.
- RESULTS OF TENDON MOCK-UP.

(F) PRE-GROUTING OPERATIONS

STORE GROUT IN A DRY LOCATION. IF STORING IN THE OPEN, THE GROUT MUST BE ON A RAISED PLATFORM WITH ADEQUATE WATERPROOF COVERING. LIMIT ON-SITE STORAGE OF GROUT TO A MAXIMUM PERIOD OF ONE MONTH. GROUT MUST BE USED WITHIN 150 DAYS OF DATE OF MANUFACTURE.

PLACE A PERMANENT PLASTIC END CAP WITH A VENT OVER EACH ANCHOR HEAD IMMEDIATELY AFTER STRAND TAILS ARE CUT.

BEFORE GROUTING BEGINS, CHECK AND PREPARE DUCTS BY BLOWING THROUGH OIL-FREE AND WATER-FREE COMPRESSED AIR. OPEN AND CLOSE EACH VENT IN TURN TO BLOW OUT MOISTURE. THE DUCT SHOULD BE ABLE TO MAINTAIN A PRESSURE OF 140 KPA (20 PSI) WITH ALL VENTS CLOSED. IF THE SYSTEM CANNOT HOLD PRESSURE, LOCATE AND REPAIR LEAKS PRIOR TO GROUTING.

ATTAIN ACCEPTANCE OF THE GROUTING PROCEDURE FROM THE ENGINEER PRIOR TO GROUTING. INCLUDE THE FOLLOWING IN THE PROCEDURE:

- INSPECTION TO ENSURE THAT ALL MATERIALS ARE OF THE SPECIFIED TYPE AND QUANTITY.
- INSPECTION TO ENSURE THAT ALL EQUIPMENT IS IN SATISFACTORY CONDITION.
- INSPECTION OF DUCTS TO ENSURE THAT THEY ARE FREE OF WATER, DEBRIS, AND OTHER OBSTRUCTIONS.
- INSPECTION OF DUCTS TO ENSURE THAT THERE WILL BE NO GROUT LEAKAGE BETWEEN ADJACENT DUCTS IN THE JOINT AREAS OR AT COUPLERS FOR EXTERNAL TENDONS.
- TEMPERATURE MEASUREMENT OF AIR, WATER, AND PREPACKAGED GROUT TO ENSURE THAT THEY ARE WITHIN THE ACCEPTANCE REQUIREMENTS SPECIFIED FOR TEMPERATURE CONSIDERATIONS.
- INSPECTION OF ALL PREPACKAGED GROUT OR CEMENT PACKAGES FOR EVIDENCE OF AGE AND DAMPNESS, SUCH AS LUMPS AND HARDENED PIECES.
- COMMENCE GROUTING OPERATIONS ONLY AFTER THE ENGINEER'S ACCEPTANCE TO PROCEED IS RECEIVED.
- GROUT ONLY WHEN BOTH THE AMBIENT AIR TEMPERATURE AND SUBSTRATE TEMPERATURE ARE AT LEAST 5 DEGREES C (41 DEGREES F) DURING THE GROUTING OPERATION AND FOR 3 HOURS THEREAFTER. ADDITIONALLY, GROUT TEMPERATURE MUST BE MAINTAINED ABOVE 2 DEGREES C (35 DEGREES F) FOR 3 CONSECUTIVE DAYS AFTER GROUTING.

(G) MIXING CONDITIONS

1. HOT WEATHER, EMPLOY HOT-WEATHER MIXING AND PROTECTION METHODS WHEN THE AMBIENT AIR TEMPERATURE EXCEEDS 32° C (90° F). COOL-MIX WATER TO MAINTAIN GROUT TEMPERATURE AT 27° C (80° F) OR BELOW AT THE TIME OF GROUTING. ICE MAY BE NECESSARY AND IF USED SHOULD BE ADDED TO THE MIX WATER TO LOWER THE WATER TEMPERATURE PRIOR TO MIXING. DO NOT ALLOW ICE IN THE GROUT MIXTURE.

2. COLD WEATHER. MAINTAIN A DAILY RECORD OF MINIMUM AND MAXIMUM AMBIENT AIR TEMPERATURES DURING COLD WEATHER. RECORD THE TEMPERATURE OF THE GROUT DRY INGREDIENTS AND THE STRUCTURE SURROUNDING THE DUCTS TO BE GROUTED.

WHEN AMBIENT AIR TEMPERATURE HAS BEEN BELOW 0°C (32° F) AFTER DUCT PLACEMENT AND PRIOR TO GROUTING, BLOW DRY AIR THROUGH THE DUCTS TO EXPEL ANY TRAPPED WATER, FROST, OR ICE. GROUT ONLY WHEN BOTH THE AMBIENT AIR TEMPERATURE AND SUBSTRATE TEMPERATURE ARE AT LEAST 5 DEGREES C (41 DEGREES F) DURING THE GROUTING OPERATION AND FOR 3 HOURS THEREAFTER. ADDITIONALLY, GROUT TEMPERATURE MUST BE MAINTAINED ABOVE 2 DEGREES C (35 DEGREES F) FOR 3 CONSECUTIVE DAYS AFTER GROUTING.

(H) GROUTING OPERATIONS

OPEN ALL VENTS JUST PRIOR TO GROUTING. GROUT TENDONS IN AN UPHILL DIRECTION. UNLESS OTHERWISE APPROVED BY THE ENGINEER (IN CASES WITH UNUSUAL GEOMETRY OR CONSTRUCTION PROBLEMS), START GROUTING FROM NEAR THE LOWEST INLET. MAINTAIN A CONTINUOUS, ONE-WAY FLOW FOR THE DURATION OF A GROUTING STAGE. USE A METHOD OF INJECTING GROUT THAT ENSURES COMPLETE FILLING OF THE DUCTS AND COMPLETE SURROUNDING OF THE STRAND OR BAR WITHIN 30 MINUTES OF THE FIRST ADDITION OF WATER TO THE DRY INGREDIENTS UNLESS OTHERWISE APPROVED BY THE ENGINEER.

INJECT GROUT AT A TARGET RATE BETWEEN 5 M (16.4 FT) AND 15 M (49.2 FT) OF DUCT PER MINUTE UNLESS OTHERWISE APPROVED BY THE ENGINEER. PUMP THE GROUT THROUGH THE DUCT UNTIL THERE IS CONTINUOUS FLOW AT THE FIRST OUTLET. CLOSE THE OUTLET AFTER THE EJECTED GROUT FLOW SHOWS NO VISIBLE POCKETS OF WATER OR AIR AND THE CONSISTENCY OF THE GROUT IS THE SAME AS THAT OF THE GROUT BEING PUMPED. EJECT A MINIMUM OF 1 GALLON OF WASTE GROUT FROM EACH VENT (OUTLET) AND APPROXIMATELY 5 GALLONS FROM THE FINAL OUTLET. IF GROUT CONSISTENCY IS DIFFERENT THAN AT INLET, CONTINUE TO EJECT GROUT UNTIL THE SAME GROUT CONSISTENCY OR FLUIDITY TEST VALUE IS OBTAINED. CLOSE ALL OUTLETS ONE AFTER THE OTHER IN A SIMILAR MANNER IN THE DIRECTION OF THE FLOW WITH THE EXCEPTION OF OUTLETS LOCATED AT INTERMEDIATE CRESTS. CLOSE THE DOWNSTREAM CREST OUTLETS BEFORE THE ASSOCIATED CREST OUTLET.

NORMAL GROUTING OPERATIONS WILL TYPICALLY BE PERFORMED AT APPROXIMATELY 0.5 MPA (75 PSI), AND TYPICALLY WILL NOT EXCEED:

1 MPA (145 PSI) - INTERNAL POLYETHELENE DUCTS, OVAL STEEL DUCTS, FLAT STEEL DUCTS, AND EXTERNAL HIGH DENSITY POLYETHYLENE (HDPE) PIPE.

- 1.7 MPA (245 PSI) - INTERNAL CIRCULAR STEEL DUCTS.

IF THE GROUTING PRESSURE EXCEEDS THE MAXIMUM ALLOWED, CLOSE THE INLET AND INJECT GROUT AT THE NEXT OUTLET THAT HAS JUST BEEN OR IS READY TO BE CLOSED, PROVIDED A ONE-WAY FLOW IS MAINTAINED. FIT THE OUTLET THAT IS TO BE USED AS THE NEW INLET WITH A POSITIVE SHUT-OFF.

TO PREVENT THE UNINTENDED LOSS OF GROUT, AFTER THE TENDON DUCT IS COMPLETELY FILLED WITH GROUT AND ALL OUTLETS HAVE BEEN CLOSED, MAINTAIN THE NORMAL GROUT PRESSURE FOR 1 MINUTE BEFORE THE INLET IS SEALED OFF UNDER PRESSURE.

1. VERTICAL GROUTING. PROVIDE A STANDPIPE AT THE UPPER END OF THE TENDON FOR ALL VERTICAL TENDONS TO COLLECT BLEED WATER TO BE REMOVED FROM THE GROUT. IF THE LEVEL OF THE GROUT DROPS BELOW THE HIGHEST POINT IN THE ANCHORAGE DEVICE, ADD ADDITIONAL GROUT TO THE STANDPIPE IMMEDIATELY. REMOVE THE STANDPIPE AFTER THE GROUT HAS HARDENED. GROUTS USED FOR VERTICAL GROUTING MUST MEET THE SCHUPACK PRESSURE TESTING REQUIREMENTS. THE STANDPIPE IS A PRECAUTIONARY MEASURE AND NOT A SUBSTITUTION FOR THESE REQUIREMENTS.

IF THE GROUTING PRESSURE EXCEEDS THE MAXIMUM ALLOWED, CLOSE THE INLET AND INJECT THE GROUT AT THE NEXT HIGHER OUTLET THAT HAS JUST BEEN, OR IS READY TO BE CLOSED, PROVIDED A ONE-WAY FLOW IS MAINTAINED. ALLOW GROUT TO FLOW FROM THE OUTLET UNTIL ALL VISIBLE AIR AND WATER HAVE BEEN REMOVED BEFORE USING THAT OUTLET FOR INJECTION. GROUTING IN LIFTS MAY BE NECESSARY FOR TALL VERTICAL APPLICATIONS AS PER THE FOLLOWING PROCEDURE. GROUT THE STAY IN LIFTS UNLESS A PRIOR MOCK-UP SHOWS THAT THE STAY CAN BE SUCCESSFULLY GROUTED IN ANOTHER MANNER. THE ENGINEER MAY APPROVE GROUTING OF A STAY IN A SINGLE OPERATION IF THE CONTRACTOR SUBMITS INFORMATION WHICH ADEQUATELY ESTABLISHES THAT THE MATERIALS, EQUIPMENT AND PROCEDURE INTENDED FOR USE WILL NOT DAMAGE THE PIPE. THE INFORMATION MUST SHOW THAT THE GROUTING PRESSURE WILL NOT DAMAGE THE POLYETHYLENE PIPE AT -30° C (-22° F) AFTER THE GROUT IS CURED. IF ANY INDICATIONS OF GROUTING IRREGULARITIES APPEAR THAT ARE ATTRIBUTABLE TO SINGLE OPERATION GROUTING, DISCONTINUE THE METHOD AND USE MULTIPLE LIFT GROUTING.

NOTE: EITHER ALL METRIC OR ALL ENGLISH VALUES MUST BE USED ON PLANS. METRIC AND ENGLISH VALUES SHOWN MAY NOT BE MIXED.

CORRECTIONS MADE BY BRIDGE QUALITY ASSURANCE DIVISION ON 12-10-2010

DEC. 21 2010

PENNDOT DRAWING 09-601-BQAD

COMMONWEALTH OF PENNSYLVANIA REGISTERED PROFESSIONAL ROY L. ERIKSSON ENGINEER PE 077232

08-31-10

CENTRAL ATLANTIC BRIDGE ASSOCIATES (CABA)	Eriksson technologies	813.989.3317 TAMPA, FL LRFD.COM
COMMONWEALTH OF PENNSYLVANIA DEPARTMENT OF TRANSPORTATION	DATE: 08/31/10	
	SCALE: N/A	
SPLICED PRESTRESSED CONCRETE GIRDER STANDARDS	DWN: CWS	CK'D: RLE
	JOB NO:	
GROUT SPECIFICATIONS	SHEET NO: 11	

S:\Engineering Services\CABA\Production Drawings\AutoCAD Files\SG-11.dwg, 8/31/2010 3:55:17 PM, Adobe PDF

LIFT METHOD – WATER FLUSHING IS NOT PERMITTED TO CLEAN THE PIPES AND THE WIRE OR STRAND BUNDLES.

DO NOT EXCEED GROUT LIFTS OF 38 M (125 FT) IN HEIGHT FOR HDPE PIPE STAY CABLES. LIMIT THE FIRST GROUT LIFT IN EACH STAY CABLE TO 6 M (20 FT) ABOVE THE DECK. LIMIT THE LAST LIFT OF GROUT TO THE SMALLEST DIMENSION CONSISTENT WITH THE DIMENSIONS OF THE TOWER OR PYLON. THIS MINIMIZES THE POSSIBILITY OF CREATING A GROUT VOID IN THE TOP OF THE PIPE.

INSTALL GROUT PORTS AT THE TIP AND BOTTOM OF EACH GROUT LIFT. BEGIN GROUTING AT THE LOWEST INJECTION PORT WHILE ALL VENTS REMAIN OPEN. MAINTAIN A PUMPING PRESSURE THROUGH THE PIPE UNTIL THE GROUT FLOWS FOR A MINIMUM OF 15 SECONDS OUT THE NEXT VENT HOLE AFTER NO VISIBLE WATER OR AIR ARE EJECTED. NEXT CLOSE THE VENT AND SECURELY CAP THE INJECTION PORT. AFTER THE GROUT HAS HARDENED, DRAIN OFF ANY RESIDUAL WATER ON TOP PRIOR TO BEGINNING THE NEXT GROUTING LIFT. MOVE THE GROUTING OPERATION TO THE NEXT BEGINNING THE NEXT GROUTING LIFT. MOVE THE GROUTING OPERATION TO THE NEXT HIGHER PORT AND REPEAT THE GROUTING PROCESS UNTIL THE ENTIRE STAY CABLE IS FILLED WITH GROUT.

DO NOT EXCEED DIAMETRICAL EXPANSION OF THE HDPE PIPE ABOVE 2% OF THE ORIGINAL NOMINAL DIAMETER. ELIMINATE THE DIAMETRICAL EXPANSION AT THE GROUT INJECTION POINT BY THE USE OF STEEL CLAMPS. SECURELY CLAMP THE PIPE AT THE NEXT INJECTION PORT AFTER THE PREVIOUS GROUT LIFT HARDENS BUT BEFORE PROCEEDING WITH THE NEXT GROUT LIFT.

FIT THE GROUT OUTLET FOR THE TOP LIFT WITH A STANDPIPE AT LEAST 1.2 M (4 FT) HIGH. FILL ANY VOID REMAINING IN THE GROUT COLUMN WITHIN THE STAY CABLE FOLLOWING THE FINAL GROUT LIFT WITH GROUT. BLOW OUT WITH COMPRESSED OIL–FREE AIR ANY ACCUMULATED WATER IN THE UPPERMOST GROUT VENT BEFORE GROUTING EXISTING CAVITY. AFTER AIR–FREE GROUT FLOWS FOR A PERIOD OF 15 SECONDS, CAP THE VENT AND GROUT PORTS.

IMMEDIATELY WASH AWAY GROUT COMING IN CONTACT WITH THE OUTSIDE SURFACE OF THE STAY CABLE OR OTHER COMPONENTS.

WHEN THE GROUTING PROCESS IS COMPLETE, REMOVE GROUT PUMPING PIPES AND VENTS AND PATCH CABLE STAY SHEATHING AS NECESSARY AT VENT HOLES TO ENSURE WATER TIGHTNESS OF THE SHEATHING.

(I) QUALITY CONTROL TESTING

NOTIFY THE DEPARTMENT'S REPRESENTATIVE WHEN QUALITY CONTROL TESTING IS TO BE PERFORMED. THE ASBI CERTIFIED GROUT TECHNICIAN RUNS THE QUALITY CONTROL TESTING. THE PRODUCTION GROUT MEETS OR EXCEEDS THE REQUIREMENTS IN TABLE C.

TABLE C: QUALITY CONTROL TESTING REQUIREMENTS

TEST	FREQUENCY	PERFORMANCE CRITERIA	TEST METHOD
GROUT STRENGTH TEST (AVERAGE OF 3 CUBES)	1 PER DAY	≥ 21 MPA (3,000 PSI) AT 7 DAYS ≥ 35 MPA (5,000 PSI) AT 28 DAYS	ASTM C942
FLUIDITY TEST	1 EVERY* 2 HOURS	WITHIN ± 5 SEC OF VALUES ESTABLISHED DURING LABORATORY TESTING	ASTM C939**
SCHUPACK PRESSURE BLEED TEST	1 PER DAY*	APPENDIX C OF THE "GUIDE SPECIFICATION FOR GROUTING OF POST–TENSIONED STRUCTURES" PUBLISHED BY THE POST–TENSIONING INSTITUTE.	
API MUD BALANCE TEST	2 PER DAY***	MUST BE ≥ ESTABLISHED LAB VALUE	

* TAKEN AT THE INLET.

** USE EITHER THE STANDARD ASTM C939 FLOW CONE TEST OR THE MODIFIED TEST DEPENDING ON WHICH WAS APPROVED AND USED INITIALLY IN THE LABORATORY TESTING.

***OR WHEN THERE IS A VISUAL OR APPARENT CHANGE IN THE CHARACTERISTICS OF THE GROUT. IN ADDITION TO THE TWO PER DAY, TAKE AN ADDITIONAL SAMPLE FORM THE DUCT OUTLET TO ENSURE THAT EXTRA WATER IS NOT PRESENT IN THE TENDON.

(J) POST–GROUTING OPERATIONS

CLEAN ALL EQUIPMENT THOROUGHLY AFTER GROUTING. DO NOT REMOVE OR OPEN THE VALVES, CAPS, AND PIPES AT THE INLET AND OUTLET UNTIL THE GROUT HAS SET. DO NOT SUBJECT GROUTED TENDONS TO VIBRATION FOR A MINIMUM OF 4 HOURS IF A PREQUALIFIED GROUT MEETING THE SECTION TESTING AND ACCEPTANCE (B) PRE–QUALIFICATION TESTING IS USED OR A MINIMUM OF 24 HOURS FOR ALL OTHER GROUTS UNLESS APPROVED BY THE ENGINEER. DO NOT OPEN INLETS, OUTLETS, OR VENTS UNTIL GROUT HAS SET. BEFORE PROTECTION OF END ANCHORAGES IS STARTED, REMOVE ALL MATERIALS USED FOR SEALING THE GROUT CAP CONNECTIONS. AT ANCHORAGES, PLUG ALL INLETS AND OUTLETS WITH PLASTIC OR STAINLESS STEEL THREADED CAPS. REPAIR ANY SPLITS, HOLES, OR OTHER DAMAGE TO EXPOSED DUCTS.

INSPECT THE LEVEL OF GROUT IN THE OUTLETS AND GROUT CAPS AND TOP OFF AS NECESSARY WITH FRESH GROUT AFTER 24 HOURS FROM THE FINISH OF GROUTING. FILL ANY VOIDS IMMEDIATELY WITH FRESH GROUT. USE VACUUM GROUTING PROCEDURES IF REQUIRED BY THE ASBI–CERTIFIED INSPECTOR AND AS REQUIRED BY AASHTO, IF STRANDS ARE EXPOSED.

1. INTERNAL TENDONS. FOR INTERNAL TENDONS SUBJECTED TO AGGRESSIVE ENVIRONMENTS, REMOVE TUBING 25 MM (1 IN.) BELOW CONCRETE SURFACE, SEAL, AND FILL WITH COMPATIBLE CEMENTITOUS – BASED MATERIAL TO FLUSH WITH CONCRETE SURFACE.

2. EXTERNAL TENDONS. SEAL OUTLET AND INLET OPENINGS PERMANENTLY.

3. ANCHORAGES, PROTECT ANCHORAGES TO PERMANENTLY PREVENT ACCESS OF WATER OR OTHER AGGRESSIVE AGENTS. INSTALL A PERMANENT PLASTIC CAP OVER THE ANCHOR HEAD PRIOR TO GROUTING. LEAVE THIS CAP IN PLACE TO FORM PART OF THE PERMANENT PROTECTION FOR THE TENDON. FILL THE CONCRETE BLOCK–OUT WITH LOW PERMEABILITY CONCRETE OR GROUT. COAT EXPOSED GIRDER ENDS WITH APPROVED ELASTOMERIC SYSTEM HAVING THICKNESS OF 30 TO 45 MILS.

(K) RECORD OF GROUTING OPERATION

PROVIDE RECORDS OF GROUTING FOR REVIEW BY THE ENGINEER WITHIN 72 HOURS OF GROUTING. RECORD THE FOLLOWING INFORMATION:

- DATE GROUTED
- NUMBER OF DAYS FROM STRESSING TO GROUTING
- TYPE OF PREPACKAGED GROUT
- TENDON(S) GROUTED
- INJECTION END AND APPLIED GROUTING PRESSURE
- SUMMARY OF ANY PROBLEMS
- CORRECTIVE ACTION TAKEN
- MEASURE OF THE COMPLETE FILLING OF THE DUCT(S) ADJUSTED FOR THE GROUT DISPLACED BY THE PRESTRESSING STRANDS.
- GROUT LOT NUMBER
- GROUT MANUFACTURE DATE
- ASBI–CERTIFIED INSPECTOR PRESENT DURING OPERATION
- QUALITY CONTROL TEST VALUES
- RESULTS OF POST–GROUTING INSPECTION
- AMBIENT AND SUBSTRATE TEMPERATURES

(L) INSPECTION CRITERIA REQUIRED BY FHWA

NO EARLIER THAN 24 HOURS AFTER GROUTING, PROBE AND PICK THE GROUT WITHIN ANCHORAGE OUTLETS AND ALL HIGH POINT OUTLETS TO IDENTIFY THE PRESENCE OF SOFT GROUT. SOFT GROUT IS CONSIDERED ANY GROUT THAT IS UNHARDENED. IF SOFT GROUT IS FOUND CEASE ALL GROUTING OPERATIONS AND NOTIFY THE DEPARTMENT REPRESENTATIVE.

CORRECTIONS MADE BY BRIDGE DESIGN AND TECHNOLOGY DIVISION ON 10-31-13 ON THE GROUT REQUIREMENTS TO MEET STATE OF PRACTICE

NOTE: EITHER ALL METRIC OR ALL ENGLISH VALUES MUST BE USED ON PLANS. METRIC AND ENGLISH VALUES SHOWN MAY NOT BE MIXED.

DEC. 21 2010 PENNDOT DRAWING 09–601–BQAD

COMMONWEALTH OF PENNSYLVANIA REGISTERED PROFESSIONAL ROY L. ERIKSSON ENGINEER PE 077232

08-31-10

CENTRAL ATLANTIC BRIDGE ASSOCIATES (CABA)	Eriksson technologies	813.989.3317 TAMPA, FL LRFD.COM
COMMONWEALTH OF PENNSYLVANIA DEPARTMENT OF TRANSPORTATION	DATE: 08/31/10	
	SCALE: N/A	
SPLICED PRESTRESSED CONCRETE GIRDER STANDARDS	DWN: CWS	CK'D: RLE
	JOB NO:	
GROUT SPECIFICATIONS	SHEET NO: 12	

S:\Engineering Services\CABA\Production Drawings\AutoCAD Files\SG-12.dwg, 8/31/2010 3:54:46 PM, Adobe PDF

Product:

Item 9000-7027 - PLYWALL Sound Barrier Wall System
Hoover Treated Wood Products, Inc.
PennDOT Drawing # 2009-050 PE

Approval Date:	**Initiated By SOL:**
October 17, 2011	431-11-10

Application/Use:

PLYWALL Sound Barrier Wall System post and panel wall system manufactured by Hoover Treated Wood Products, Inc. has been approved for use as an "**Alternate"** or "**As-designed"** sound barrier. This wall system has a warranty of 25 years. An additional 30-40 years of service life is obtained with properly treated components. The use as an "Alternate" or "As-designed" sound barrier is at the discretion of the District Executive.

A preferred application for this product would be a location where maintaining the aesthetic value is desirable. This location could include but is not limited to rural settings where a wood barrier would blend in with the natural surroundings. It can also be considered in applications where the residents want to maintain the view shed with a natural product.

PLYWALL Sound Barrier Wall System is limited to the following applications installations:

- Maximum panel width length: 12 feet
- Maximum wall height: 22 feet
- Ground Mounted

This sound barrier wall system meets both AASHTO and Design Manual, Part 4 design criteria.

Specifications:

Design/Material/Construction Specifications for this post and panel sound barrier wall system are specified on PennDOT Drawing # 2009-050 PE, dated October 17, 2011. In addition, see applicable sections of Publication 408, Section 1086 – SOUND BARRIERS.

Standard Drawing:

Attached is a copy of the Standard Detail Drawing #2009-050 PE, dated October 17, 2011, of PLYWALL Sound Barrier Wall System details for your use.

Comments:

On those projects permitting the use of this system as an alternate, a special provision should be included in the proposal to indicate that the "PLYWALL Sound Barrier Wall System" as an alternate is allowed.

The contractor will be required to revise the pertinent contract drawings as per DM-4M, PP 1.10 to show the usage of "PLYWALL Sound Barrier Wall System" and will also be required to reimburse the Department a fee of $1000 per design for the review and approval of the revision. This should be specified in the contract's Special Provisions.

Item 9000-7027 - PLYWALL Sound Barrier Wall System

Instructions for Usage: The header must be edited to indicate the details and/or item(s) of construction. Use as an "alternate" or "as designed" for sound barrier wall system. Use in accordance with information located on the web at **http://www.dot.state.pa.us/Internet/BQADStandards.nsf/home?OpenFrameset** and then clicking on "Structure Products" on the left side. This is listed as "Product No. 50".

Header:
ITEM 9000-7027 – PLYWALL SOUND BARRIER WALL SYSTEM

Provision Body:

I. DESCRIPTION -

This work is the design, manufacture, storage, delivery, installation, and assembly of PLYWALL sound barrier wall system as indicated and specified on the approved PENNDOT Drawing No. 2009-050 PE (Dated 10/17/2011).

II. MATERIAL -

PLYWALL sound barrier wall system. Provide posts and panels as specified in Materials notes on PennDOT Drawing No. 2009-050 PE (Dated 10/17/2011). Obtain PLYWALL sound barrier wall system from a fabricator listed in Bulletin 15. Certification to be submitted in accordance with Section 106.03(b)3.

III. CONSTRUCTION -

(a) Design. Provide design in accordance with PENNDOT Drawing No. 2009-050 PE (Dated 10/17/2011).

(b) Shop Drawings. Provide approved shop drawings before fabricating PLYWALL panels and posts.

Provide shop drawings meeting the general requirements of Section 105.02(d).

Contractor is required to reimburse the Department a fee of $1000 per design for the review and approval of the revision.

(c) Installation. Install in accordance with PENNDOT Drawing No. 2009-050 PE (Dated 10/17/2011).

IV. MEASUREMENT AND PAYMENT - Square Foot

GENERAL NOTES

1. THE PLYWALL COMPAMY TAKES FULL RESPONSIBILITY FOR ENGINEERING THEORY AND CALCULATION CORRECTNESS AND ENSURING THAT ALL DESIGN ASSUMPTIONS ARE VALIDATED IN THE CONTRACT DOCUMENTS EITHER BY NEEDED DETAILS OR CONSTRUCTION OR SPECIFICATIONS.

2. ALL DIMENSIONS ARE IN U.S. CUSTOMARY UNITS.

3. DESIGN SPECIFICATIONS:
   - PENNDOT DESIGN MANUAL PART 4, STRUCTURES.
   - 1989 AASHTO "GUIDE SPECIFICATIONS FOR STRUCTURAL DESIGN OF SOUND BARRIERS". INCLUDING THE 1992 AND 2002 INTERIMS.
   - 1992 AASHTO "STANDARD SPECIFICATIONS FOR HIGHWAY BRIDGES", 15TH EDITION. INCLUDING THE 1993 AND 1994 INTERIMS.
   - 2001 AASHTO "STANDARD SPECIFICATIONS FOR STRUCTURAL SUPPORTS FOR HIGHWAY SIGNS, LUMINARIES AND TRAFFIC SIGNALS", 4TH EDITION, INCLUDING THE 2002, 2003 AND 2006 INTERIMS.
   - 2005 NATIONAL DESIGN SPECIFICATIONS FOR WOOD CONSTRUCTION.
   - DESIGN IS IN ACCORDANCE WITH WORKING STRESS DESIGN METHOD. (NO INCREASE IN ALLOWABLE UNIT STRESSES ARE PERMITTED EXCEPT FOR GROUP 111 LOADINGS WHICH PERMITS A 33% OVERSTRESS.)

4. CONSTRUCTION SPECIFICATIONS AND WORKMANSHIP:
   - PROVIDE MATERIALS AND PERFORM WORK IN ACCORDANCE WITH THE CURRENT VERSION OF THE PENNSYLVANIA DEPARTMENT OF TRANSPORTATION PUBLICATION 408, AASHTO/AWS/D1.5M/D1.5 2008 – BRIDGE WELDING CODE AND THE CONTRACT SPECIAL PROVISIONS. (USE AWS/D1.1/D1.1M 2008 FOR WELDING NOT COVERED IN AASHTO/AWS/D1.5M/D1.5 2002.)

5. DESIGN LOADS:
   - WIND LOAD:
     THE WIND LOAD INCLUDES A GUST FACTOR OF 1.3 AND DRAG FACTOR OF 1.2 AND IS BASED ON A MAXIMUM 50–YEAR MEAN WIND VELOCITY 30'–0" ABOVE THE GROUND SURFACE OF 80 MPH.
   - GROUND MOUNTED SOUND BARRIER WALLS:
     U.S. CUSTOMARY UNITS:
     HEIGHT ZONE: 0' TO 14'–0" = 20 PSF
     HEIGHT ZONE: OVER 14'–0" = 28 PSF
   - ICE LOAD: 3 PSF APPLIED TO ONE SIDE OF PANEL AND POST.
   - SEISMIC LOAD: SEISMIC ACCELERATION COEFFICIENT "A" EQUAL TO 0.15.

6. WALL HEIGHTS MUST EQUAL OR EXCEED THE ACOUSTICAL PROFILE.

7. ALL REINFORCEMENT STEEL BARS ARE ASTM SIZES.

8. PROVIDE UNCOATED REINFORCEMENT BARS IN THE CAISSONS.

9. ALL DIMENSIONS SHOWN ARE HORIZONTAL, EXCEPT NOTED.

10. DIMENSIONS SHOWN ARE FOR A NORMAL TEMPERATURE OF 68 DEGREES F.

11. REINFORCEMENT IN SOME SECTIONS IS NOT SHOWN FOR CLARITY.

12. JOINT MATERIALS:
    - JOINT SEALANT MATERIAL SIKAFLEX 1A UNLESS NOTED OTHERWISE. JOINT BACKING MATERIAL, IF REQUIRED SHALL BE CLOSED–CELL POLYETHYLENE FOAM BACKER ROD.

13. TOLERANCES:

POST AND CLEATS – LENGTH: ± ½"
WIDTH: ± ¼"
DEPTH: ± ¼"
OUT OF FLATNESS: ± ⅛" FOR POST HEIGHT UP TO 8'–0"
± ¼" FOR POST HEIGHT OVER 8'–0"

PANELS – HEIGHT: ± ¼"
LENGTH: ± ½"
THICKNESS: ± ¼"
OUT OF FLATNESS: ± ⅛" FOR POST HEIGHT UP TO 8'–0"
± ¼" FOR POST HEIGHT OVER 8'–0"

ARCHITECTURAL SURFACE TREATMENT NOTES

1. CLEAR SEALANT OR STAIN OPTIONAL.

MATERIAL NOTES

1. WOOD AND FASTENERS – MATERIALS SHALL CONFORM TO THE FOLLOWING:

   - SOUND BARRIER PANELS – PANELS SHALL BE PLYWALL® PANELS AS MANUFACTURED BY HOOVER TREATED WOOD PRODUCTS, INC. PANELS SHALL CONSIST OF A STRUCTURALLY SOUND FRAME OF SOUTHERN YELLOW PINE, NO. 1 IN ACCORDANCE WITH SPIB INSPECTION RULES, LUMBER, SURFACED FOUR SIDES, COVERED ON BOTH PANEL FACES BY SHIPLAP–JOINTED, APA–303 SPECIALTY SIDING, EXTERIOR GRADE, PREMIUM (6–SW) IN ACCORDANCE WITH PS 1–95, SOUTHERN PINE (GROUP 1), EXPOSURE DURABILITY CLASSIFICATION EXTERIOR, TEXTURE 1–11, 5–PLY, 19/32" THICK, GROOVES 8" O.C. ALL WOOD USED IN PANEL CONSTRUCTION SHALL BE PRESSURE PRESERVATIVE TREATED WITH CCA (ALSO AVAILABLE IN ACQ) TO A MINIMUM NET RETENTION OF 0.40 PCF IN ACCORDANCE WITH AMERICAN WOOD PRESERVERS ASSOCIATION U1, T1, P5. ALL PLYWOOD SIDING AND 2" (NOMINAL) LUMBER SHALL BE KILN DRIED AFTER TREATMENT TO A MOISTURE CONTENT OF 19% OR LESS. ALL PANEL SECTIONS SHALL BE FABRICATED PRIOR TO SHIPMENT. ALL PANELS SHALL HAVE TWO NYLON LIFTING WEBS, SECURELY ATTACHED ALONG THE TOP. ALL PANELS SHALL HAVE SILICONE CAULK INSERTED ALONG THE TOP EDGES OF THE PANEL WHERE THE FRAME AND T1–11PLYWOOD JOIN.

   - SUPPORT POSTS – POSTS SHALL BE PARALLAM® PSL SOUTHERN PINE PARALLEL STRAND LUMBER, 2.0 E, AS MANUFACTURED BY ILEVEL, A WEYERHAEUSER BUSINESS. MINIMUM NET RETENTION OF PRESERVATIVE SHALL BE 0.40 PCF OF CCA. POSTS SHALL BE BUNDLED SO THAT EACH LAYER IS SEPARATED BY WOOD SPACERS.

   - CLEATS – (AND BEARING BLOCKS) – VERTICAL CLEATS FOR ATTACHING PANELS TO POSTS SHALL BE SOUTHERN PINE TIMBERS, GRADE NO. 1 IN ACCORDANCE WITH SPIB INSPECTION RULES, SURFACED FOUR SIDES. CLEATS SHALL BE PRESSURE PRESERVATIVE TREATED WITH CCA TO A MINIMUM NET RETENTION OF (0.40) PCF IN ACCORDANCE WITH AMERICAN WOOD PRESERVERS ASSOCIATION U1, T1, P5. CLEATS WILL BE PRE–DRILLED TO RECEIVE THE CLEAT SPIKES.

   - FASTENERS – ALL NAILS FOR PANEL FABRICATION SHALL BE STAINLESS STEEL RING SHANK. SPIKES FOR ATTACHING CLEATS TO POST SHALL BE HOT DIP GALVANIZED ZINC COATED PER ASTM A153, UNLESS NOTED AS STAINLESS STEEL. CLEAT SPIKES ARE PROPRIETARY RING–SHANK FASTENERS BY MAZE NAILS, A DIVISION OF W.H. MAZE COMPANY. TIMBER TAMERS ARE PROPRIETARY STAINLESS STEEL HEX WASHER HEAD SCREWS BY SIMPSON STRONG–TIE COMPANY, INC.

2. CAST–IN–PLACE CONCRETE:
   - PROVIDE CLASS A CEMENT CONCRETE IN THE CAST–IN–PLACE CAISSONS.
     F'C = 3,000 PSI
   - UNIT WEIGHT OF CONCRETE = 150 LB. / CU. FT.

3. REINFORCEMENT STEEL:
   - PROVIDE GRADE 60 DEFORMED REINFORCING BARS THAT MEET THE REQUIREMENTS OF ASTM A615, ASTM A996, OR ASTM A706. DO NOT WELD REINFORCING BARS UNLESS SPECIFIED. DO NOT USE RAIL STEEL A996 REINFORCEMENT BARS IN FOOTINGS, CAISSONS, OR WHERE BENDING OR WELDING OF REINFORCEMENT BARS IS INDICATED.
     FS = 24,000 PSI
   - ALL REINFORCEMENT STEEL BARS SHOWN ARE U.S. CONVENTIONAL UNITS.
   - PROVIDE UNCOATED REINFORCEMENT IN THE FOOTINGS AND CAISSONS.
   - PROVIDE MINIMUM LAP AND EMBEDMENT LENGTH FOR REINFORCING BARS OF 30 DIAMETERS OR IN ACCORDANCE WITH THE CURRENT AASHTO SPECIFICATIONS AS MODIFIED BY THE DESIGN MANUAL PART 4, WHICHEVER IS GREATER.

GEOMETRY NOTES

1. CAISSON LOCATIONS MUST BE PROPERLY SET FOR WALL PANEL ALIGNMENT.

DESIGN TABLE NOTES

1. DESIGNS TABLES SHOWN FOR CAISSONS ARE DEVELOPED FOR A 28 PSF. USE THE INFORMATION SHOWN IN THE TABLES FOR ALL HEIGHT ZONES.

2. THE DESIGN POST SPACING (CENTER–TO–CENTER POSTS) IS TO BE THE ACTUAL POST SPACING.

3. THE DESIGN WALL HEIGHT IS TO BE THE ACTUAL WALL HEIGHT ROUNDED UP TO THE NEXT HIGHEST INCREMENT OF WALL HEIGHT SHOWN ON THE DESIGN TABLES.

4. FOR ANGLED AND CORNER POST NOTES REFER TO SHEET S3.

5. POST AND PANEL DEFLECTION MAX L/360.

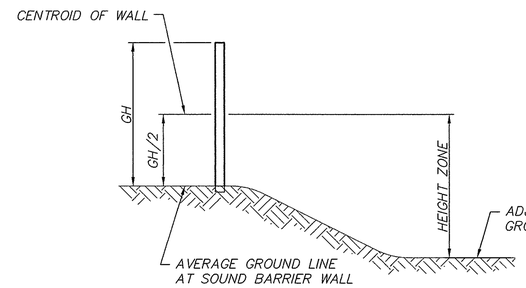

SECTION

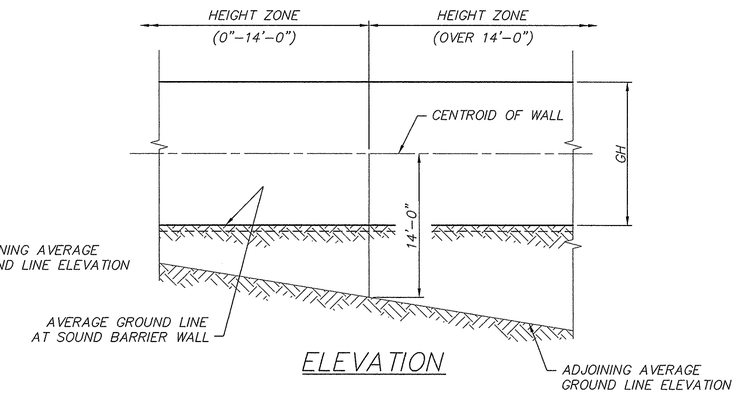

ELEVATION

HEIGHT ZONE (FEET)	WIND PRESSURE (PSF)
0–14	20
OVER 14	28

HEIGHT ZONES FOR GROUND MOUNTED SOUND BARRIERS

DESIGN PARAMETERS

1. CAISSONS:
   - CAISSONS ARE DESIGNED IN SOIL USING THE INDICATED SOIL PROPERTIES.
   - CAISSONS ARE DESIGNED FOR A WIND PRESSURE EQUAL TO 28 PSF.
   - FACTOR OF SAFETY AGAINST OVERTURNING = 2.0 MINIMUM
   - MAXIMUM ALLOWABLE LATERAL DESIGN DISPLACEMENT AT TOP OF CAISSON = ½"
   - CAISSON LENGTHS DETERMINED USING LPILE V5.0 COMPUTER PROGRAM. FINAL CAISSON LENGTHS INDICATED INCLUDES AN ADDITIONAL 3'–0" LENGTH TO ACCOUNT FOR FREEZING AND THAWING, WEATHERING, AND OTHER SHALLOW GROUND DISTURBANCE.
   - CAISSON MAXIMUM ALLOWABLE VERTICAL DISPLACEMENT = 1"
   - DRILLED CAISSONS ARE DESIGNED FOR LEVEL GROUND. A SITE SPECIFIC DESIGN IS REQUIRED IF GROUND IS SLOPED.
   - DRILLED CAISSONS ARE DESIGNED WITHOUT LIVE LOAD SURCHARGE. REDESIGN CAISSONS IF LIVE LOAD SURCHARGE IS REQUIRED.
   - ALTERNATE CAISSON DESIGNS ARE PERMITTED IF SOIL PROPERTIES DIFFER FROM THOSE INDICATED OR IF CAISSON EXTENDS PARTIALLY OR ENTIRELY INTO ROCK. FOUNDATIONS DESIGN PARAMETERS MUST BE ACCEPTED BY THE DEPARTMENT.

INDEX OF SHEETS

SHEET NO.	SHEET TITLE
S1	GENERAL NOTES
S2	SOUND BARRIER ELEVATIONS
S3	POST DETAILS
S4	CAISSON DETAILS
S5	30"ø CAISSON SCHEDULE
S6	36"ø CAISSON SCHEDULE
S7	PANEL DETAILS – 8'–0" AND UNDER
S8	PANEL DETAILS – OVER 8'–0" TO 12'–0"

COMMONWEALTH OF PENNSYLVANIA REGISTERED PROFESSIONAL ENGINEER STEPHEN A. DAVIS ENGINEER PE077277
17 DEC 2010

PREPARED BY:
CRANSTON ENGINEERING GROUP, P.C.
452 ELLIS STREET
AUGUSTA, GA 30901

ENGINEER — PE
17 DEC 2010
DATE

IN MY PROFESSIONAL OPINION, ALL DESIGN ASSUMPTIONS HAVE BEEN VALIDATED EITHER THROUGH CONSTRUCTION DETAILS OR THROUGH THE CONTRACT PLANS AND PROVISIONS."

PENNSYLVANIA
DEPARTMENT OF TRANSPORTATION
RECOMMENDED
Thomas P Macioce
CHIEF BRIDGE ENGINEER

OCT. 17, 2011

PREPARED BY
Cranston Engineering Group, P.C.
ENGINEERS - PLANNERS - SURVEYORS
452 ELLIS STREET, AUGUSTA, GEORGIA 30901
POST OFFICE BOX 2546, AUGUSTA, GEORGIA 30903
TELEPHONE 706-722-1588 FACSIMILE 706-722-8379
mail@cranstonengineering.com
JOB NO.: 2010-0020

PREPARED FOR:
PLYWALL®
THE SOUND SOLUTION
A Division of Hoover Treated Wood Products, Inc.

PENN DOT DRAWING # 2009–050 PE

PLYWALL SOUND BARRIER WALL SYSTEM
– GROUND MOUNTED –

DATE	SHEET TITLE		
12–15–10	GENERAL NOTES		
DRAWN	CHECKED	APPROVED	SHEET NO.:
GLS	JBC	AAD	S1

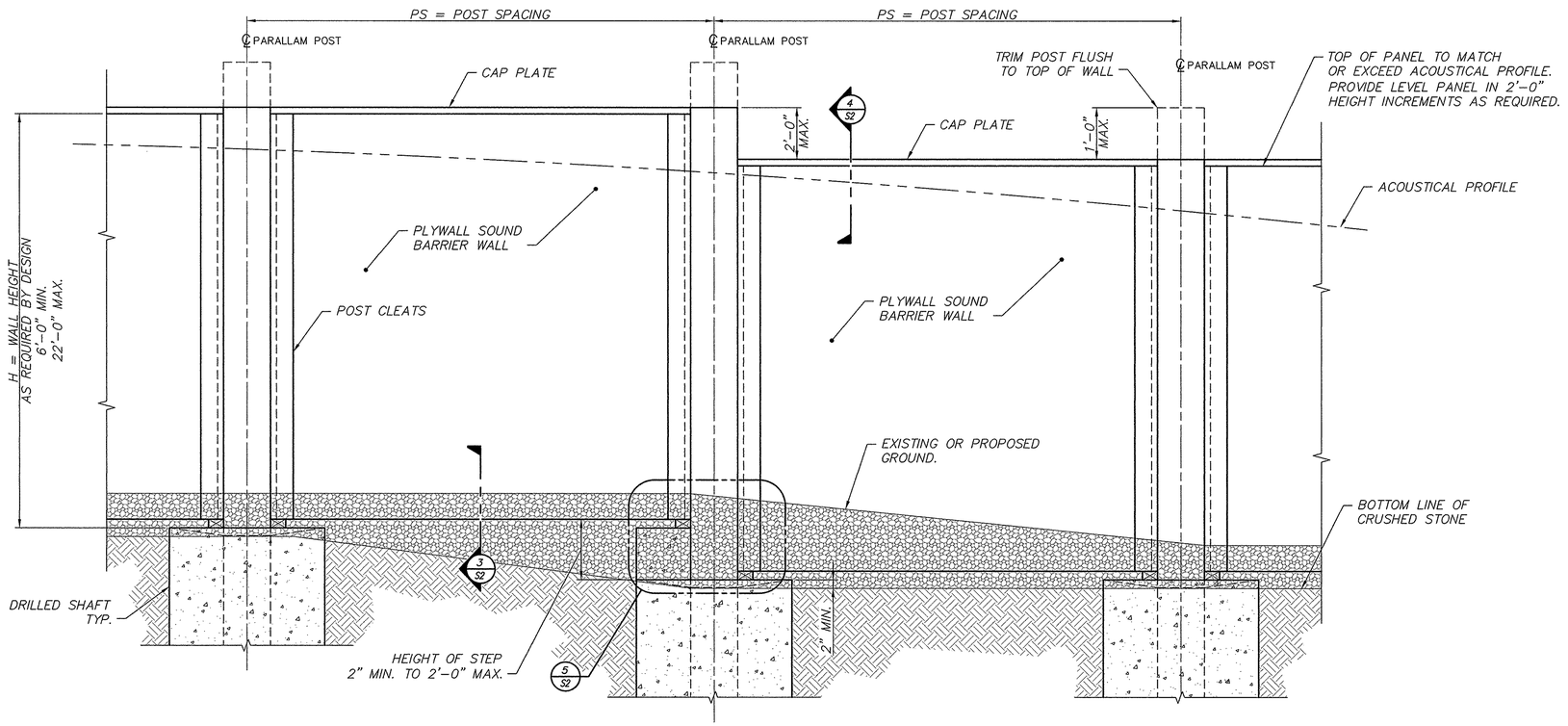

1 S2 GROUND MOUNTED SOUND BARRIER ELEVATION
SCALE: 3/4" = 1'-0"

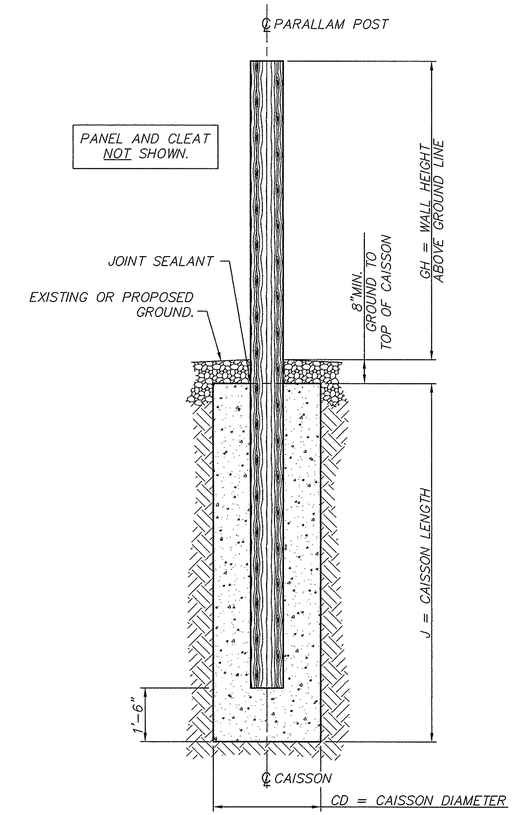

2 S2 SECTION AT CAISSON
SCALE: 1/2" = 1'-0"

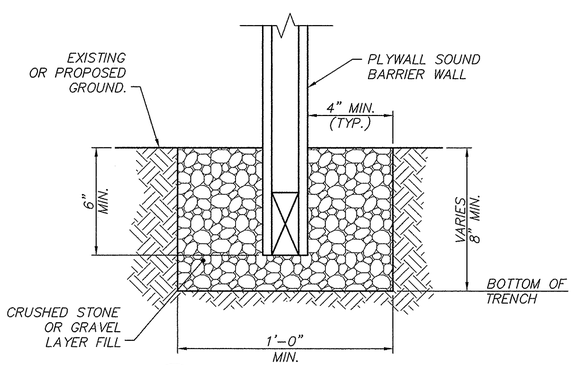

3 S2 SECTION AT GRADE
SCALE: 3" = 1'-0"

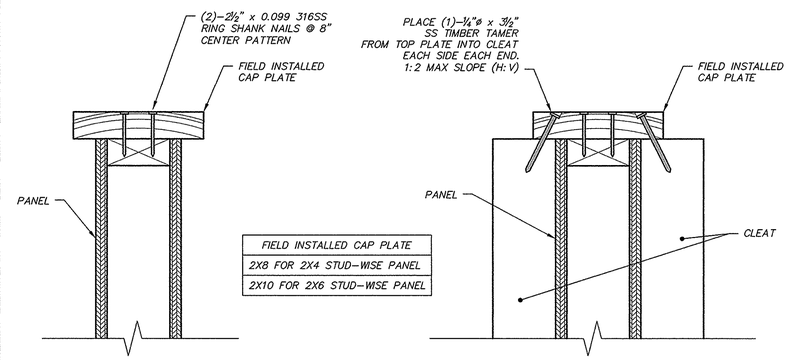

FIELD INSTALLED CAP PLATE
2X8 FOR 2X4 STUD-WISE PANEL
2X10 FOR 2X6 STUD-WISE PANEL

4 S2 CAP PLATE DETAIL
SCALE: 3" = 1'-0"

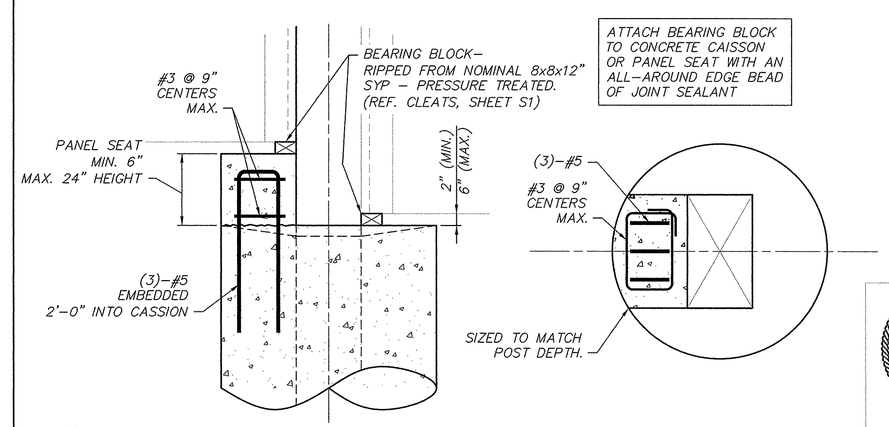

5 S2 PANEL SEAT DETAIL
SCALE: 1" = 1'-0"

COMMONWEALTH OF PENNSYLVANIA REGISTERED PROFESSIONAL ENGINEER STEPHEN A. DAVIS ENGINEER PE077277
17 DEC 2010

OCT. 17, 2011

LEGEND:

✱ GRADE GROUND TO DRAIN WATER AWAY FROM THE WALL. FILL DEPTH ON EACH SIDE OF WALL TO BE WITHIN 1'-0" DIFFERENCE.

NOTES:

1. FOR ADDITIONAL INFORMATION REFER TO NOTES ON SHEETS 1.

PREPARED BY
Cranston Engineering Group, P.C.
ENGINEERS - PLANNERS - SURVEYORS
452 ELLIS STREET, AUGUSTA, GEORGIA 30901
POST OFFICE BOX 2546, AUGUSTA, GEORGIA 30903
TELEPHONE 706-722-1588 FACSIMILE 706-722-8379
mail@cranstonengineering.com
JOB NO.: 2010-0020

PREPARED FOR: PLYWALL® THE SOUND SOLUTION A Division of Hoover Treated Wood Products, Inc.

PENN DOT DRAWING # 2009-050 PE

PLYWALL SOUND BARRIER WALL SYSTEM - GROUND MOUNTED -

DATE 12-15-10	SHEET TITLE SOUND BARRIER ELEVATIONS		
DRAWN GLS	CHECKED	APPROVED	SHEET NO.: S2

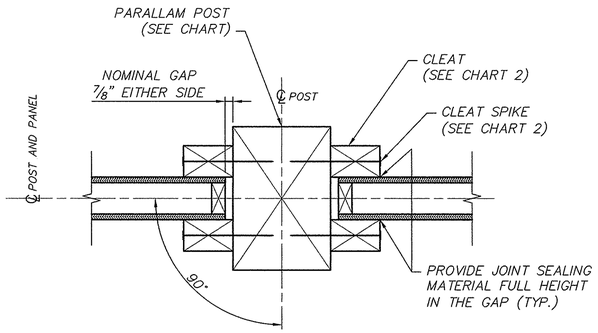

1 / S3 IN-LINE POST DETAIL
SCALE: 1-1/2" = 1'-0"

NO SKEW CUT CLEATS REQUIRED
IF LESS THAN 5° TOTAL
(2.5 DEGREES EACH SIDE)

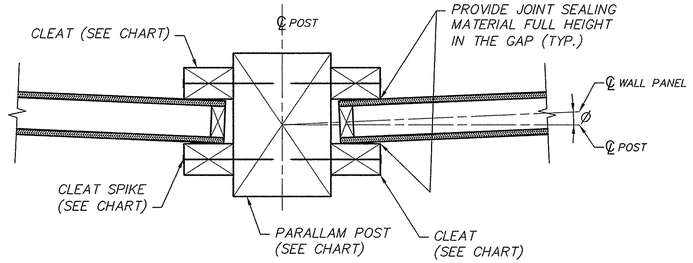

2 / S3 ANGLED END POST DETAIL Ø < 2.5°
SCALE: 1-1/2" = 1'-0"

Ø = PANEL ORIENTATION IN RELATIONSHIP
TO POST CENTERLINE.

USE 4x6 FOR ALL SKEWED CLEATS

SKEW CUT CLEATS REQUIRED

SPECIAL DESIGN AND DETAILS
ARE REQUIRED FOR Ø > 10°

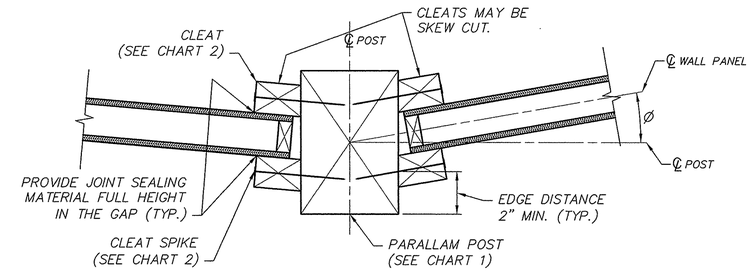

3 / S3 ANGLED END POST DETAIL 2.5° < Ø < 10°
SCALE: 1-1/2" = 1'-0"

Ø = PANEL ORIENTATION IN RELATIONSHIP
TO POST CENTERLINE.

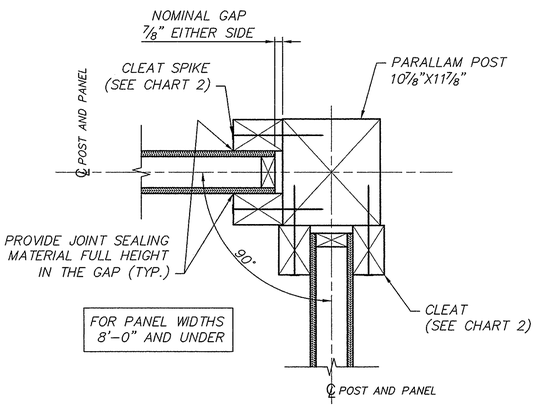

FOR PANEL WIDTHS
8'-0" AND UNDER

4 / S3 90 DEGREE POST DETAIL
SCALE: 1-1/2" = 1'-0"

CAISSON REQUIRES SPECIAL
DESIGN AND DETAILS.

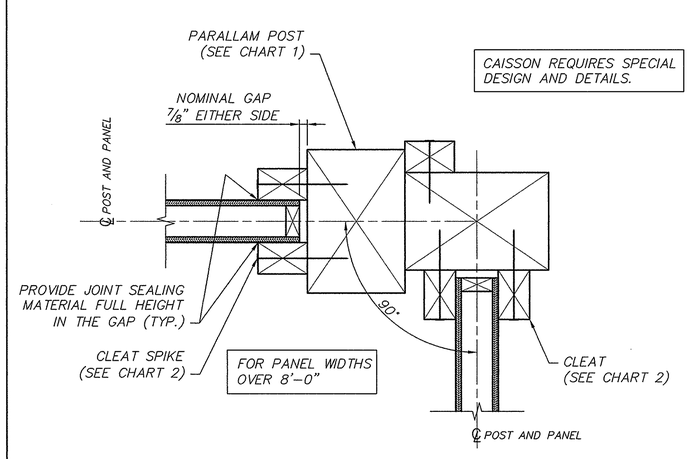

FOR PANEL WIDTHS
OVER 8'-0"

5 / S3 90 DEGREE POST DETAIL – SPECIAL
SCALE: 1-1/2" = 1'-0"

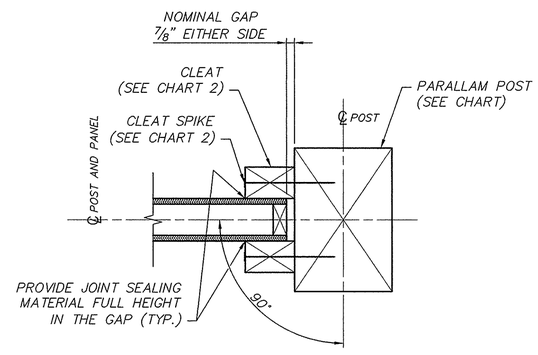

6 / S3 END POST DETAIL
SCALE: 1-1/2" = 1'-0"

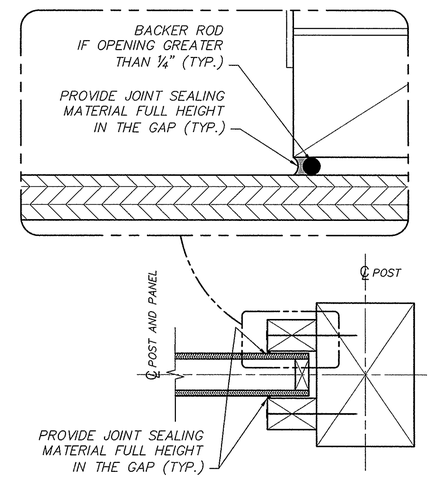

7 / S3 GAP JOINT FILLER DETAIL
SCALE: 1-1/2" = 1'-0"

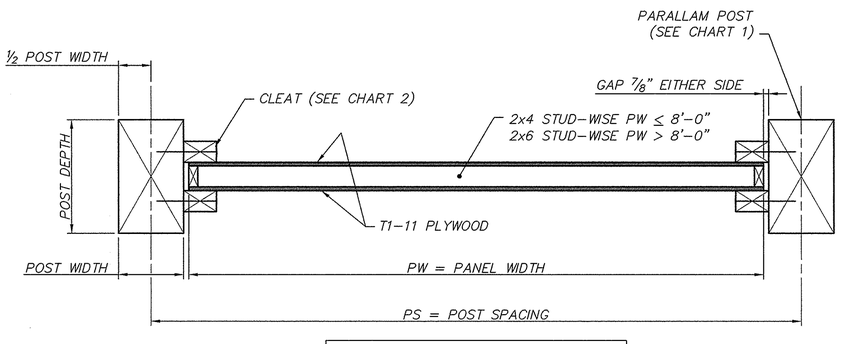

PS = SEE CHART 1 FOR POST SPACING.

8 / S3 PLYWALL PLAN SECTION
SCALE: 1" = 1'-0"

PANEL WIDTH PW (FT.)	CHART 1: POST SPACING (PS) FOR IN-LINE POSTS AND ANGLED POSTS WITH Ø ≤ 2.5°						
	B 5 1/4"X11 7/8"	E 5 1/4"X14"	F 7"X14"	G 10 7/8"X11 7/8"	H 10 7/8"X14"	J 10 7/8"X16"	K 10 7/8"X19"
6.0	6'-6 7/8"	6'-6 7/8"	6'-8 3/4"	7'-0 5/8"	7'-0 5/8"	7'-0 5/8"	7'-0 5/8"
8.0 HORZ.	8'-6 7/8"	8'-6 7/8"	8'-8 3/4"	9'-0 5/8"	9'-0 5/8"	9'-0 5/8"	9'-0 5/8"
8.0	8'-7 3/8"	8'-7 3/8"	8'-9 1/4"	9'-1 1/8"	9'-1 1/8"	9'-1 1/8"	9'-1 1/8"
10.0	N/A	10'-7 3/8" *	10'-9 1/4"	11'-1 1/8"	11'-1 1/8"	11'-1 1/8"	11'-1 1/8"
12.0	N/A	12'-7 3/8" *	12'-9 1/4"	13'-1 1/8"	13'-1 1/8"	13'-1 1/8"	13'-1 1/8"

8.0 HORZ. = HORIZONTAL T1-11 GROOVES

* – FOR 20 PSF WIND PRESSURE ONLY

CHART 2: CLEAT SIZES AND SPIKE REQUIREMENTS				
PARALLAM POST ID	NOMINAL POST SIZE (IN.) WxD	NOMINAL CLEAT SIZE SYP#1 S4S	CLEAT SPIKES	MIN. EMBED INTO POST
B	5 1/4"x11 7/8"	4"x4"	MAZE T366-A-8" @ 12" (O.C.)	4 1/4"
E	5 1/4"x14"	4"x4"	MAZE T366-A-8" @ 12" (O.C.)	4 1/4"
F	7"x14"	4"x4"	MAZE ZL-8-A-8" @ 12" (O.C.)	4 1/4"
G	10 7/8"x11 7/8"	4"x4"	MAZE ZL-8-A-8" @ 12" (O.C.)	4 1/4"
H	10 7/8"x14"	4"x4"	MAZE ZL-8-A-8" @ 12" (O.C.)	4 1/4"
J	10 7/8"x16"	4"x6"	MAZE ZL 10-A-10" @ 12" (O.C.)	4 1/4"
K	10 7/8"x19"	4"x6"	MAZE ZL 10-A-10" @ 12" (O.C.)	4 1/4"

NOTE:
CONSTRUCTION ALLOWANCE FOR GAP BETWEEN POST AND PANELS IS ± 1/2", THE NOMINAL GAP IS 7/8", AND MAXIMUM GAP SHOULD NOT EXCEED 1-3/8" FOR CONSTRUCTION. FOR THE ANGLED END POST DETAIL (ANGLE Ø > 2.5°), THE POST SPACING NEEDS TO BE ADJUSTED BASED ON THE JOINT GEOMETRY.

COMMONWEALTH OF PENNSYLVANIA
REGISTERED PROFESSIONAL
STEPHEN A. DAVIS
ENGINEER
PE077277
17 DEC 2010

PREPARED BY
Cranston Engineering Group, P.C.
ENGINEERS - PLANNERS - SURVEYORS
452 ELLIS STREET, AUGUSTA, GEORGIA 30901
POST OFFICE BOX 2546, AUGUSTA, GEORGIA 30903
TELEPHONE 706-722-1588 FACSIMILE 706-722-8379
mail@cranstonengineering.com
JOB NO.: 2010-0020

OCT. 17, 2011

PREPARED FOR:

PLYWALL®
THE SOUND SOLUTION
A Division of Hoover Treated Wood Products, Inc.

PENN DOT DRAWING # 2009-050 PE

PLYWALL SOUND BARRIER WALL SYSTEM
– GROUND MOUNTED –

DATE 12-15-10	SHEET TITLE POST DETAILS		
DRAWN GLS	CHECKED	APPROVED	SHEET NO.: S3

NOTE:
CONTRACTOR TO TEMP. SHORE AND BRACE WALL CONSTRUCTION TO PROVIDE STABILITY UNTIL ALL FOUNDATION WORK IS COMPLETED AND CONCRETE HAS CURED FOR A MINIMUM OF (7) DAYS. TYPICAL THROUGHOUT.

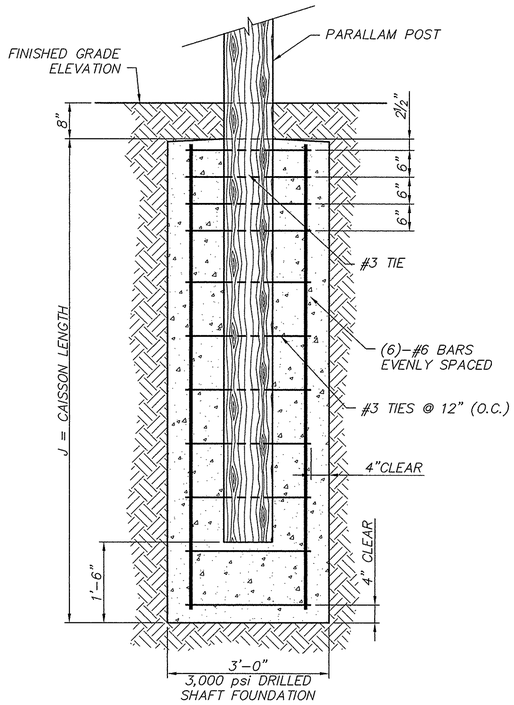

1 / S4 CAISSON SECTION
SCALE: 3/4" = 1'–0"

NOTE:
CONTRACTOR TO TEMP. SHORE AND BRACE WALL CONSTRUCTION TO PROVIDE STABILITY UNTIL ALL FOUNDATION WORK IS COMPLETED AND CONCRETE HAS CURED FOR A MINIMUM OF (7) DAYS. TYPICAL THROUGHOUT.

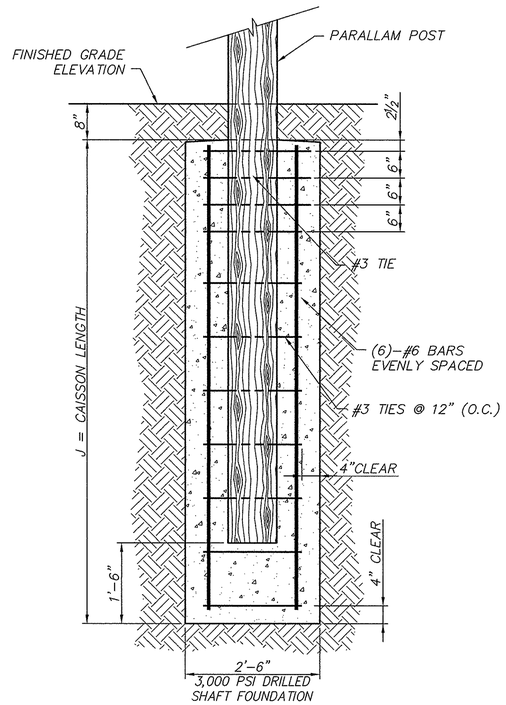

2 / S4 CAISSON SECTION
SCALE: 3/4" = 1'–0"

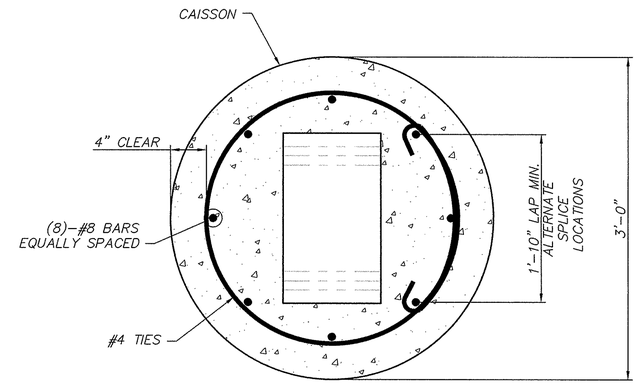

USE FOR POST SIZES: 10⅞"x11⅞", 10⅞"x14", 10⅞"x16, AND 10⅞"x19

3 / S4 CAISSON PLAN
SCALE: 1–1/2" = 1'–0"

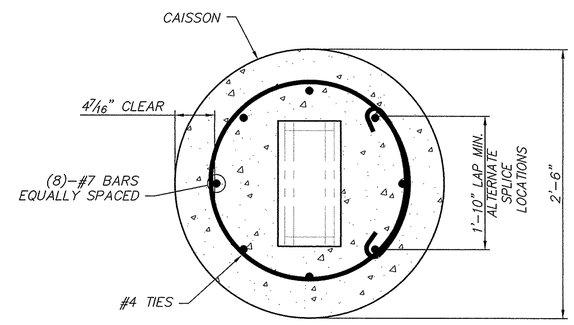

USE FOR POST SIZES: 5¼"x11⅞", 5¼"x14", AND 7"x14"

4 / S4 CAISSON PLAN
SCALE: 1–1/2" = 1'–0"

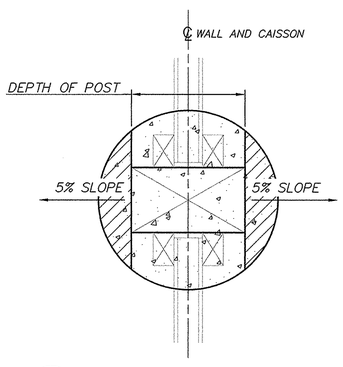

5 / S4 TOP OF CAISSON DETAIL
SCALE: 1" = 1'–0"

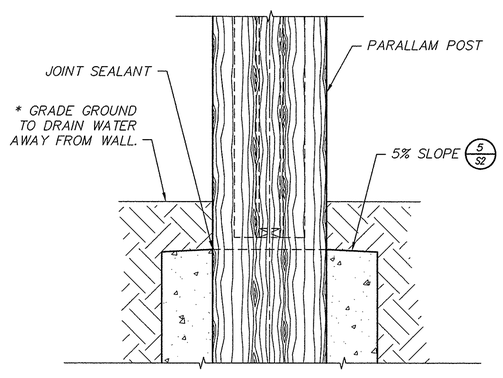

6 / S4 TOP OF CAISSON DETAIL
SCALE: 1" = 1'–0"

COMMONWEALTH OF PENNSYLVANIA
REGISTERED PROFESSIONAL ENGINEER
STEPHEN A. DAVIS
ENGINEER
PE077277
17 DEC 2010

OCT. 17, 2011

PREPARED BY
Cranston Engineering Group, P.C.
ENGINEERS - PLANNERS - SURVEYORS
452 ELLIS STREET, AUGUSTA, GEORGIA 30901
POST OFFICE BOX 2546, AUGUSTA, GEORGIA 30903
TELEPHONE 706-722-1558 FACSIMILE 706-722-8379
mail@cranstonengineering.com
JOB NO.: 2010-0020

PREPARED FOR:
PLYWALL®
THE SOUND SOLUTION
A Division of Hoover Treated Wood Products, Inc.

PENN DOT DRAWING # 2009–050 PE

PLYWALL SOUND BARRIER WALL SYSTEM
– GROUND MOUNTED –

DATE 12–15–10	SHEET TITLE CAISSON DETAILS		
DRAWN GLS	CHECKED	APPROVED	SHEET NO.: S4

30"ø CAISSON LENGTHS FOR PARALLAM POST EMBEDMENT 30"ø

U.S. CUSTOMARY UNITS
WIND PRESSURE = 28 psf

TYPE 1 SOILS SATURATED LOOSE SAND			TYPE 2 SOILS DRY MEDIUM DENSE SAND			TYPE 3 SOILS SATURATED SOFT CLAY			TYPE 4 SOILS DRY MEDIUM STIFF CLAY		
SOIL PROPERTIES: 1. ANGLE OF INT. FRICTION = 30° 2. C = 0.0 LB./SQ. FT. 3. UNIT WEIGHT = 100 LB./CU. FT. 4. K = 20 LB. CU. IN			SOIL PROPERTIES: 1. ANGLE OF INT. FRICTION = 34° 2. C = 0.0 LB./SQ. FT. 3. UNIT WEIGHT = 120 LB./CU. FT. 4. K = 90 LB. CU. IN			SOIL PROPERTIES: 1. ANGLE OF INT. FRICTION = 0° 2. C = 500 LB./SQ. FT. 3. UNIT WEIGHT = 100 LB./CU. FT. 4. K = 100 LB. CU. IN			SOIL PROPERTIES: 1. ANGLE OF INT. FRICTION = 0° 2. C = 1,000 LB./SQ. FT. 3. UNIT WEIGHT = 120 LB./CU. FT. 4. K = 200 LB. CU. IN		
PANEL WIDTH PW (FT.)	PANEL HEIGHT PH (FT.)	J (FT.)	PANEL WIDTH PW (FT.)	PANEL HEIGHT PH (FT.)	J (FT.)	PANEL WIDTH PW (FT.)	PANEL HEIGHT PH (FT.)	J (FT.)	PANEL WIDTH PW (FT.)	PANEL HEIGHT PH (FT.)	J (FT.)
6.0	6.0	10.0	6.0	6.0	7.5	6.0	6.0	9.0	6.0	6.0	7.5
	8.0	10.5		8.0	7.5		8.0	9.5		8.0	7.5
	10.0	11.5		10.0	8.0		10.0	11.0		10.0	8.0
	12.0	13.0		12.0	9.0		12.0	12.0		12.0	9.0
	14.0	14.0		14.0	9.5		14.0	14.5		13.0	10.0
8.0	6.0	10.5	8.0	6.0	7.5	8.0	6.0	9.5	8.0	6.0	7.5
	8.0	11.5		8.0	8.0		8.0	11.0		8.0	8.0
	10.0	12.5		10.0	8.5		10.0	12.0		10.0	8.5
	12.0	14.0		12.0	9.5		12.0	14.0		12.0	10.0
	13.0	14.0		13.0	9.5		13.0	14.5		13.0	10.0
10.0	6.0	10.5	10.0	6.0	7.5	10.0	6.0	9.5	10.0	6.0	7.5
	8.0	12.5		8.0	8.5		8.0	12.0		8.0	8.5
	10.0	14.0		10.0	9.5		10.0	14.0		10.0	10.0
	12.0	14.0		12.0	9.5		12.0	14.5		12.0	10.0
12.0	6.0	11.5	12.0	6.0	8.0	12.0	6.0	11.0	12.0	6.0	8.0
	8.0	12.5		8.0	8.5		8.0	12.0		8.0	8.5
	10.0	14.0		10.0	9.5		10.0	14.0		10.0	10.0
	11.0	14.0		11.0	9.5		11.0	14.5		11.0	10.0

INSTRUCTIONS FOR DETERMINING WALL POST SIZE AND CAISSON LENGTHS:

1. ENTER THE CHARTS ON SHEETS S7 AND S8 WITH THE WIND SPEED AND PANEL HEIGHT REQUIREMENTS FOR THE PROJECT AND SELECT THE PANEL WIDTH(S) AND PARALLAM POST ID(S) THAT WILL BE USED FOR THE PROJECT. THEN CONTINUE PROJECT DETAIL REQUIREMENTS USING SHEET S5 FOR PARALLAM POSTS B, E AND F OR SHEET S6 FOR PARALLAM POSTS G, H, J AND K.
2. DETERMINE SOIL TYPE BASED ON THE INFORMATION SHOWN IN THE ACCEPTED STRUCTURAL FOUNDATION GEOTECHNICAL REPORT. SELECT THE SOIL TYPE WHICH HAS A STRENGTH LESS THAN OR EQUAL TO THE ACTUAL SOIL STRENGTH. ALTERNATE CAISSON DESIGNS ARE PERMITTED IF SOIL PROPERTIES DIFFER FROM THOSE INDICATED FOR THE FOUR SOIL TYPES.
3. DETERMINE GROUND WATER LEVEL. IF GROUND WATER IS WITHIN THE CAISSON LENGTH INDICATED IN THE TABLES FOR TYPE 2 AND TYPE 4 SOILS, USE THE CAISSON LENGTH IN THE TABLES FOR TYPE 1 OR TYPE 3 SOILS. IF GROUND WATER IS NOT WITHIN CAISSON LENGTH, USE THE CAISSON LENGTH INDICATED IN THE TABLES FOR TYPE 2 OR TYPE 4 SOILS.
4. MINIMUM CAISSON LENGTH IN SOIL = 7'-6" FOR 30" DIA. CAISSON.

COMMONWEALTH OF PENNSYLVANIA
REGISTERED PROFESSIONAL ENGINEER
STEPHEN A. DAVIS
ENGINEER
PE077277
17 DEC 2010

PREPARED BY
Cranston Engineering Group, P.C.
ENGINEERS - PLANNERS - SURVEYORS
452 ELLIS STREET, AUGUSTA, GEORGIA 30901
POST OFFICE BOX 2546, AUGUSTA, GEORGIA 30903
TELEPHONE 706-722-1558 FACSIMILE 706-722-8379
mail@cranstonengineering.com
JOB NO.: 2010-0020

PREPARED FOR:

OCT. 17, 2011

PLYWALL®
THE SOUND SOLUTION
A Division of Hoover Treated Wood Products, Inc.

PENN DOT DRAWING # 2009-050 PE

PLYWALL SOUND BARRIER WALL SYSTEM
– GROUND MOUNTED –

DATE	SHEET TITLE		
12-15-10	30"ø CAISSON SCHEDULE		
DRAWN GLS	CHECKED	APPROVED	SHEET NO.: S5

36"ø CAISSON LENGTHS FOR PARALLAM POST EMBEDMENT 36"ø

U.S. CUSTOMARY UNITS
WIND PRESSURE = 28 psf

TYPE 1 SOILS SATURATED LOOSE SAND			TYPE 2 SOILS DRY MEDIUM DENSE SAND			TYPE 3 SOILS SATURATED SOFT CLAY			TYPE 4 SOILS DRY MEDIUM STIFF CLAY		
SOIL PROPERTIES: 1. ANGLE OF INT. FRICTION = 30° 2. C = 0.0 LB./SQ. FT. 3. UNIT WEIGHT = 100 LB./CU. FT. 4. K = 20 LB. CU. IN			SOIL PROPERTIES: 1. ANGLE OF INT. FRICTION = 34° 2. C = 0.0 LB./SQ. FT. 3. UNIT WEIGHT = 120 LB./CU. FT. 4. K = 90 LB. CU. IN			SOIL PROPERTIES: 1. ANGLE OF INT. FRICTION = 0° 2. C = 500 LB./SQ. FT. 3. UNIT WEIGHT = 100 LB./CU. FT. 4. K = 100 LB. CU. IN			SOIL PROPERTIES: 1. ANGLE OF INT. FRICTION = 0° 2. C = 1,000 LB./SQ. FT. 3. UNIT WEIGHT = 120 LB./CU. FT. 4. K = 200 LB. CU. IN		
PANEL WIDTH PW (FT.)	PANEL HEIGHT PH (FT.)	J (FT.)	PANEL WIDTH PW (FT.)	PANEL HEIGHT PH (FT.)	J (FT.)	PANEL WIDTH PW (FT.)	PANEL HEIGHT PH (FT.)	J (FT.)	PANEL WIDTH PW (FT.)	PANEL HEIGHT PH (FT.)	J (FT.)
6.0	6.0	10.5	6.0	6.0	9.0	6.0	6.0	9.0	6.0	6.0	9.0
	8.0	10.5		8.0	9.0		8.0	9.0		8.0	9.0
	10.0	11.5		10.0	9.0		10.0	10.0		10.0	9.0
	12.0	12.5		12.0	9.0		12.0	11.5		12.0	9.0
	14.0	14.0		14.0	9.5		14.0	13.5		14.0	9.5
	16.0	15.0		16.0	10.0		16.0	15.5		16.0	10.5
	18.0	15.5		18.0	10.0		18.0	16.0		18.0	11.0
	20.0	15.5		20.0	10.5		20.0	16.5		20.0	11.5
	21.0	15.5		21.0	10.5		21.0	16.5		21.0	11.5
	22.0	16.5		22.0	11.0		22.0	17.5		22.0	12.0
8.0	6.0	10.5	8.0	6.0	9.0	8.0	6.0	9.0	8.0	6.0	9.0
	8.0	11.5		8.0	9.0		8.0	10.0		8.0	9.0
	10.0	12.5		10.0	9.0		10.0	11.5		10.0	9.0
	12.0	14.0		12.0	9.5		12.0	13.5		12.0	9.5
	14.0	15.0		14.0	10.0		14.0	15.5		14.0	10.5
	16.0	15.5		16.0	10.0		16.0	16.0		16.0	11.0
	18.0	16.0		18.0	10.5		18.0	17.0		18.0	11.5
	19.0	16.5		19.0	11.0		19.0	17.5		19.0	12.0
	20.0	17.5		20.0	11.5		20.0	19.5		20.0	13.0
10.0	6.0	10.5	10.0	6.0	9.0	10.0	6.0	9.0	10.0	6.0	9.0
	8.0	12.5		8.0	9.0		8.0	11.5		8.0	9.0
	10.0	14.0		10.0	9.5		10.0	13.5		10.0	9.5
	12.0	15.0		12.0	10.0		12.0	15.5		12.0	10.5
	14.0	15.5		14.0	10.0		14.0	16.0		14.0	11.0
	16.0	16.5		16.0	10.5		16.0	17.0		16.0	11.5
	18.0	17.5		18.0	11.5		18.0	19.5		18.0	13.0
	19.0	17.5		19.0	11.5		19.0	19.5		19.0	13.0
12.0	6.0	11.5	12.0	6.0	9.0	12.0	6.0	10.0	12.0	6.0	9.0
	8.0	12.5		8.0	9.0		8.0	11.5		8.0	9.0
	10.0	14.0		10.0	9.5		10.0	13.5		10.0	9.5
	12.0	15.0		12.0	10.0		12.0	15.5		12.0	10.5
	14.0	15.5		14.0	10.5		14.0	16.5		14.0	11.5
	16.0	17.5		16.0	11.5		16.0	19.5		16.0	13.0
	18.0	17.5		18.0	11.5		18.0	20.0		18.0	13.0

INSTRUCTIONS FOR DETERMINING WALL POST SIZE AND CAISSON LENGTHS:

1. ENTER THE CHARTS ON SHEETS S7 AND S8 WITH THE WIND SPEED AND PANEL HEIGHT REQUIREMENTS FOR THE PROJECT AND SELECT THE PANEL WIDTH(S) AND PARALLAM POST ID(S) THAT WILL BE USED FOR THE PROJECT. THEN CONTINUE PROJECT DETAIL REQUIREMENTS USING SHEET S5 FOR PARALLAM POSTS B, E AND F OR SHEET S6 FOR PARALLAM POSTS G, H, J AND K.
2. DETERMINE SOIL TYPE BASED ON THE INFORMATION SHOWN IN THE ACCEPTED STRUCTURAL FOUNDATION GEOTECHNICAL REPORT. SELECT THE SOIL TYPE WHICH HAS A STRENGTH LESS THAN OR EQUAL TO THE ACTUAL SOIL STRENGTH. ALTERNATE CAISSON DESIGNS ARE PERMITTED IF SOIL PROPERTIES DIFFER FROM THOSE INDICATED FOR THE FOUR SOIL TYPES.
3. DETERMINE GROUND WATER LEVEL. IF GROUND WATER IS WITHIN THE CAISSON LENGTH INDICATED IN THE TABLES FOR TYPE 2 AND TYPE 4 SOILS, USE THE CAISSON LENGTH IN THE TABLES FOR TYPE 1 OR TYPE 3 SOILS. IF GROUND WATER IS NOT WITHIN CAISSON LENGTH, USE THE CAISSON LENGTH INDICATED IN THE TABLES FOR TYPE 2 OR TYPE 4 SOILS.
4. MINIMUM CAISSON LENGTH IN SOIL = 9'-6" FOR 36" DIA. CAISSON.

COMMONWEALTH OF PENNSYLVANIA
REGISTERED PROFESSIONAL
STEPHEN A. DAVIS
ENGINEER
PE077277
17 DEC 2010

OCT. 17, 2011

PREPARED BY
Cranston Engineering Group, P.C.
ENGINEERS - PLANNERS - SURVEYORS
452 ELLIS STREET, AUGUSTA, GEORGIA 30901
POST OFFICE BOX 2546, AUGUSTA, GEORGIA 30903
TELEPHONE 706-722-1588 FACSIMILE 706-722-8379
mail@cranstonengineering.com
JOB NO.: 2010-0020

PREPARED FOR:
PLYWALL®
THE SOUND SOLUTION
A Division of Hoover Treated Wood Products, Inc.

PENN DOT DRAWING # 2009-050 PE

PLYWALL SOUND BARRIER WALL SYSTEM
– GROUND MOUNTED –

DATE	SHEET TITLE		
12-15-10	36"ø CAISSON SCHEDULE		
DRAWN GLS	CHECKED JBC	APPROVED SAD	SHEET NO.: S6

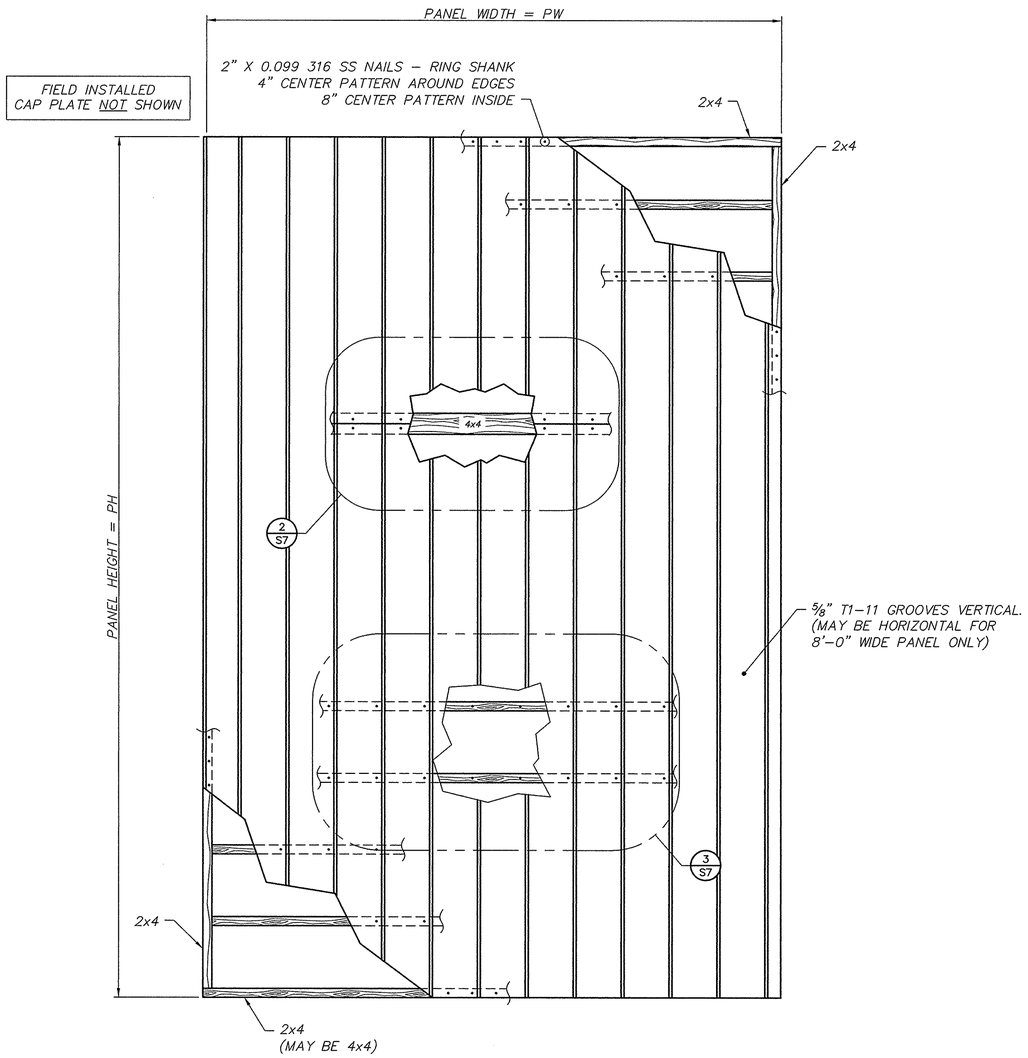

1 S7 TYPICAL PANEL DETAIL
SCALE: 1" = 1'–0"

PANEL WIDTHS 8'–0" AND LESS

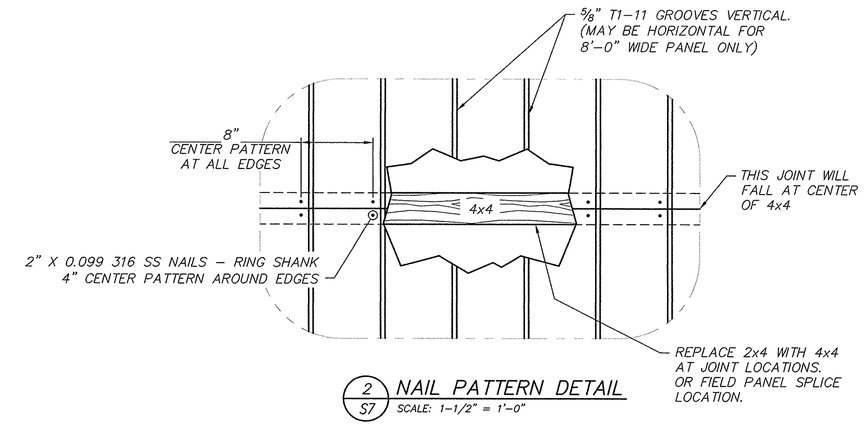

2 S7 NAIL PATTERN DETAIL
SCALE: 1–1/2" = 1'–0"

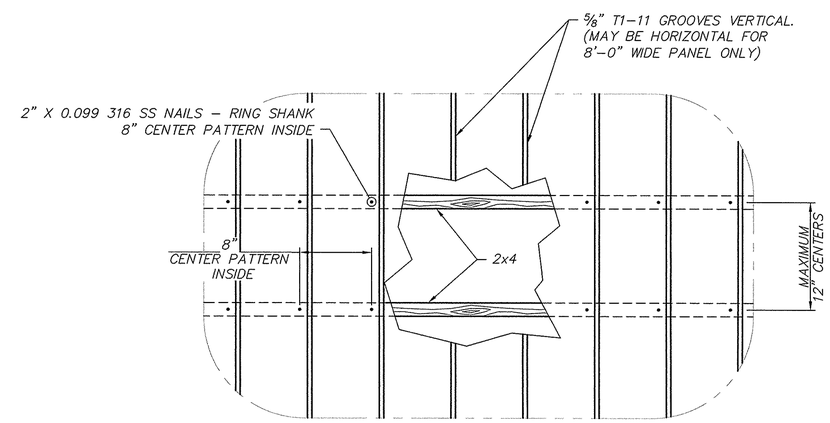

3 S7 NAIL PATTERN DETAIL
SCALE: 1–1/2" = 1'–0"

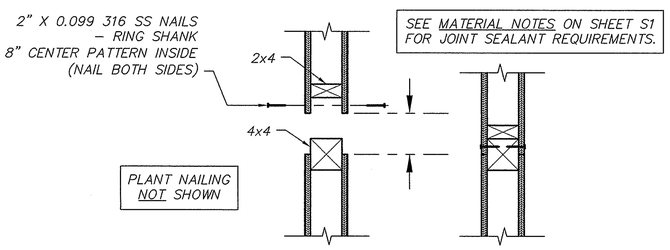

4 S7 HORIZONTAL PANEL SPLICE IN FIELD
SCALE: 1–1/2" = 1'–0"

WHERE REQUIRED DUE TO PANEL HEIGHT

MAX PANEL HEIGHT (PH) FOR POST AND PANEL WIDTHS

PARALLAM POST ID	20 psf WIND MAX. PANEL HT		28 psf WIND MAX. PANEL HT	
	PW = 6'	PW = 8'	PW = 6'	PW = 8'
B	11'–0"	10'–0"	9'–0"	8'–0"
E	13'–0"	11'–0"	11'–0"	10'–0"
F	14'–0"	13'–0"	12'–0"	11'–0"
G	13'–0"	12'–0"	12'–0"	11'–0"
H	16'–0"	14'–0"	14'–0"	13'–0"
J	18'–0"	17'–0"	16'–0"	15'–0"
K	22'–0"	20'–0"	19'–0"	18'–0"

POSTS B, E, AND F REQUIRE 30"ø CAISSONS
POSTS G, H, J, AND K REQUIRE 36"ø CAISSONS

COMMONWEALTH OF PENNSYLVANIA
REGISTERED PROFESSIONAL
STEPHEN A. DAVIS
ENGINEER
PE077277
17 DEC 2010

OCT. 17, 2011

PREPARED BY
Cranston Engineering Group, P.C.
ENGINEERS - PLANNERS - SURVEYORS
452 ELLIS STREET, AUGUSTA, GEORGIA 30901
POST OFFICE BOX 2546, AUGUSTA, GEORGIA 30903
TELEPHONE 706-722-1588 FACSIMILE 706-722-8379
mail@cranstonengineering.com
JOB NO.: 2010-0020

PREPARED FOR:
PLYWALL®
THE SOUND SOLUTION
A Division of Hoover Treated Wood Products, Inc.

PENN DOT DRAWING # 2009–050 PE

PLYWALL SOUND BARRIER WALL SYSTEM
– GROUND MOUNTED –

DATE	SHEET TITLE		
12–15–10	PANEL DETAILS – 8'–0" AND UNDER		
DRAWN GLS	CHECKED	APPROVED	SHEET NO.: S7

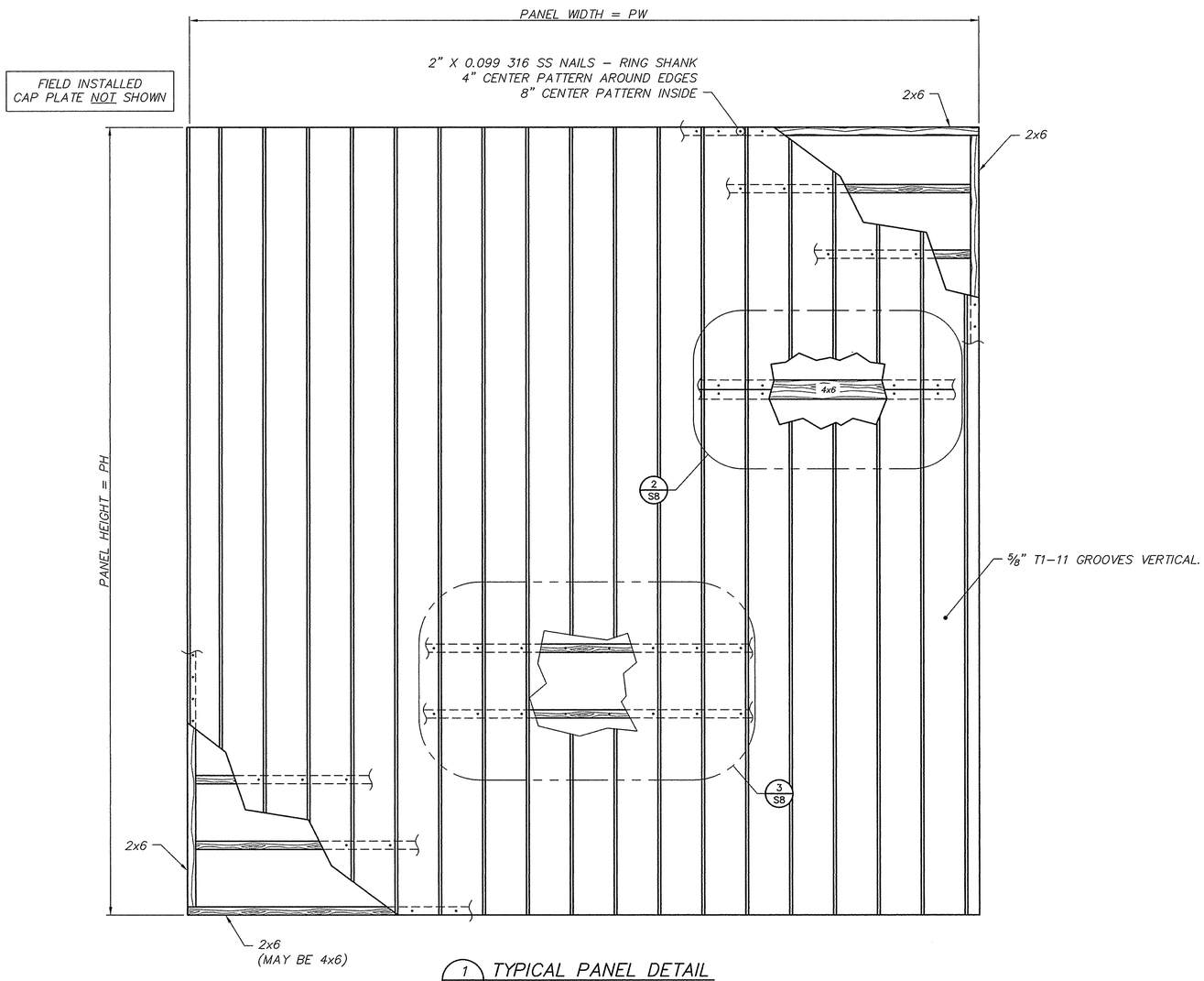

1 S8 TYPICAL PANEL DETAIL
SCALE: 1" = 1'-0"

PANEL WIDTHS FROM 8'-0" TO 12'-0"

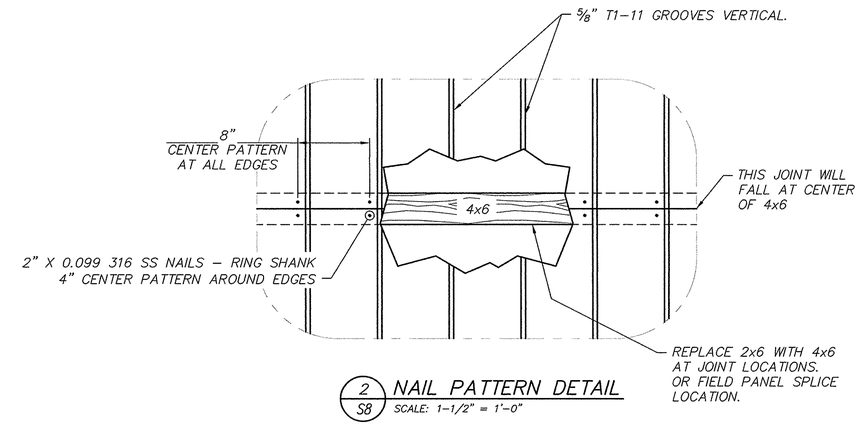

2 S8 NAIL PATTERN DETAIL
SCALE: 1-1/2" = 1'-0"

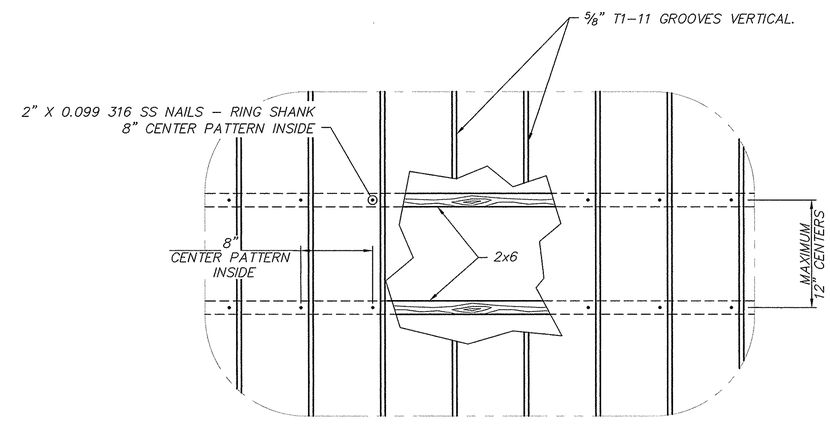

3 S8 NAIL PATTERN DETAIL
SCALE: 1-1/2" = 1'-0"

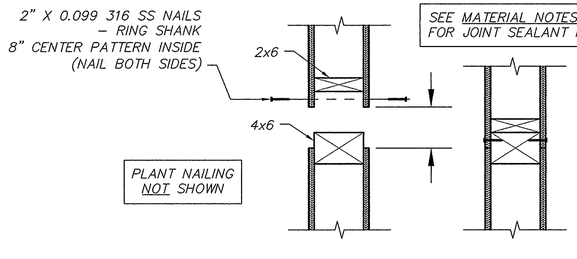

SEE MATERIAL NOTES ON SHEET S1
FOR JOINT SEALANT REQUIREMENTS.

4 S8 HORIZONTAL PANEL SPLICE IN FIELD
SCALE: 1-1/2" = 1'-0"

WHERE REQUIRED DUE TO PANEL HEIGHT

MAX PANEL HEIGHT (PH) FOR POST AND PANEL WIDTHS

PARALLAM POST ID	20 psf WIND MAX. PANEL HT		28 psf WIND MAX. PANEL HT		
	PW = 10'	PW = 12'	PW = 10'	PW = 12'	
B	N/A	N/A	N/A	N/A	N/A = NOT ALLOWED
E	11'-0"	10'-0"	N/A	N/A	N/A = NOT ALLOWED
F	12'-0"	11'-0"	10'-0"	10'-0"	
G	11'-0"	11'-0"	10'-0"	9'-0"	
H	13'-0"	13'-0"	12'-0"	11'-0"	
J	16'-0"	15'-0"	14'-0"	13'-0"	
K	19'-0"	18'-0"	17'-0"	16'-0"	

POSTS B, E, AND F REQUIRE 30"ø CAISSONS
POSTS G, H, J, AND K REQUIRE 36"ø CAISSONS

COMMONWEALTH OF PENNSYLVANIA
REGISTERED PROFESSIONAL ENGINEER
STEPHEN A. DAVIS
ENGINEER
PE077277
17 DEC 2010

OCT. 17, 2011

PREPARED BY
Cranston Engineering Group, P.C.
ENGINEERS - PLANNERS - SURVEYORS
452 ELLIS STREET, AUGUSTA, GEORGIA 30901
POST OFFICE BOX 2546, AUGUSTA, GEORGIA 30903
TELEPHONE 706-722-1588 FACSIMILE 706-722-8379
mail@cranstonengineering.com
JOB NO.: 2010-0020

PREPARED FOR:
PLYWALL
THE SOUND SOLUTION
A Division of Hoover Treated Wood Products, Inc.

PENN DOT DRAWING # 2009-050 PE

PLYWALL SOUND BARRIER WALL SYSTEM
– GROUND MOUNTED –

DATE	SHEET TITLE		
12-15-10	PANEL DETAILS – OVER 8'-0" TO 12'-0"		
DRAWN GLS	CHECKED	APPROVED	SHEET NO.: S8

Product:

Item 8620-7004 – Dura-Hold Wall System
Dura-Sales
PennDOT Drawing # 95-144R PE

Approval Date:	**Initiated By SOL:**
December 20, 2011	431-11-10

Application/Use:

Dura-Hold Wall System manufactured by Dura-Sales of Tarentum, PA. has been approved for use as an "**Alternate"** or "**As-designed"** retaining wall. The use as an "Alternate" or "As-designed" retaining wall is at the discretion of the District Executive.

Dura-Hold Wall System's usage has the following restrictions:

- Only permitted on Non-NHS system roadways
- Maximum wall height is 15 feet

This wall system meets both AASHTO and Design Manual, Part 4 design criteria.

Specifications:

Design/Material/Construction Specifications for this retaining wall system are specified on PennDOT Drawing # 95-144R PE, dated December 20, 2011.

Standard Drawing:

Attached is a copy of the Standard Detail Drawing #95-144R PE, dated December 20, 2011, of Dura-Hold Wall System details for your use.

Comments:

On those projects permitting the use of this system as an alternate, a special provision should be included in the proposal to indicate that the "Dura-Hold Wall System" as an alternate is allowed.

The contractor will be required to revise the pertinent contract drawings as per DM-4M, PP 1.10 to show the usage of "Dura-Hold Wall System" and will also be required to reimburse the Department a fee of $1000 per design for the review and approval of the revision. This should be specified in the contract's Special Provisions.

Item 8620-7004 – Dura-Hold Wall System

Instructions for Usage: The header must be edited to indicate the details and/or item(s) of construction. Use as an "alternate" or "as designed" for retaining wall systems which are no greater than 15 ft. in height and on the Non-NHS system. Use in accordance with information located on the web at **http://www.dot.state.pa.us/Internet/BQADStandards.nsf/newproducts?openform** and then clicking on "Structure Products" on the left side. This is listed as "Product No. 51".

Header:
ITEM 8620-7004 – DURA-HOLD WALL SYSTEM

Provision Body:

I. DESCRIPTION -

This work is the design, manufacture, storage, delivery, installation, and assembly of DURA-HOLD Wall System as indicated and specified on the approved PENNDOT Drawing No. 95-144R PE (Dated 12/20/2011).

II. MATERIAL -

Dura-Hold Wall System. Provide rail and tieback units as specified in Materials notes on PennDOT Drawing No. 95-144R PE (Dated 12/20/2011). Obtain Dura-Hold Wall System from a fabricator listed in Bulletin 15. Certification to be submitted in accordance with Section 106.03(b)3.

III. CONSTRUCTION -

(a) Design. Provide design in accordance with PENNDOT Drawing No. 95-144R PE (Dated 12/20/2011).

(b) Shop Drawings. Provide approved shop drawings before fabricating Dura-Hold units. Provide shop drawings meeting the general requirements of Section 105.02(d).

Contractor is required to reimburse the Department a fee of $1000 per design for the review and approval of the revision.

(c) Installation. Install in accordance with PENNDOT Drawing No. 95-144R PE (Dated 12/20/2011).

IV. MEASUREMENT AND PAYMENT - Square Foot

PREPARED BY:
LUDGATE ENGINEERING CORPORATION

LUDGATE ENGINEERING CORPORATION

COMMONWEALTH OF PENNSYLVANIA
REGISTERED PROFESSIONAL
Edwin Nordahl, II
ENGINEER
028903-E

Edwin Nordahl II
ENGINEER

11/1/2011
DATE

"I CERTIFY THAT ALL ASSUMPTIONS MADE IN DESIGNING THIS WALL HAVE BEEN VALIDATED EITHER THROUGH CONSTRUCTION DETAILS OR SPECIAL NOTES AND INSTRUCTIONS TO THE FABRICATOR, ERECTOR, AND CONTRACTOR."

SECTION I

DESIGN SPECIFICATIONS FOR DURA–HOLD WALL STRUCTURAL APPLICATION

PREFIX

THE DURA–HOLD WALL'S DESIGN CONSULTANT TAKES FULL RESPONSIBILITY FOR THE ENGINEERING THEORY CALCULATIONS CORRECTNESS AND ENSURING ALL DESIGN ASSUMPTIONS ARE VALIDATED IN THE CONTRACT DOCUMENTS; EITHER BY NEEDED DETAILS OR CONSTRUCTION SPECIFICATIONS.

THE MANUFACTURER OF THE DURA–HOLD WALL TAKES FULL RESPONSIBILITY FOR FABRICATION OF ALL UNITS IN ACCORDANCE WITH THE DESIGN CONTRACT DRAWINGS AND SPECIFICATIONS OF THE CONSULTANTS.

1.0 DESCRIPTION

THIS WORK IS THE FURNISHING AND CONSTRUCTION OF DURA–HOLD RETAINING WALL SYSTEM, INCLUDING EXCAVATION OF ON–SITE SOILS AND PLACEMENT AND COMPACTION OF SELECT AND RANDOM BACKFILL, IN CONFORMITY WITH THE LINES, GRADES, DIMENSIONS, LOCATIONS, AND SECTIONS SHOWN ON THE APPROACH CONTRACT DRAWINGS AND IN ACCORDANCE WITH THE CONTRACT DOCUMENTS, AND THE REQUIREMENTS SET FORTH HEREIN, TO FORM RETAINING STRUCTURES OF SATISFACTORY STABILITY. THE DURA–HOLD WALLS ARE PERMITTED ON NON–NHS SYSTEMS (NON–CRITICAL LOCATIONS) AND WILL BE LIMITED TO A HEIGHT NOT TO EXCEED FIFTEEN (15) FEET.

GENERAL

PROVIDE AT NO EXPENSE TO THE DEPARTMENT FOUR (4) SETS (THREE (3) SETS TO THE DISTRICT AND ONE (1) SET TO THE CENTRAL OFFICE, BRIDGE DIVISION) OF DESIGN DRAWINGS, CALCULATIONS, ERECTION METHODS, AND DETAILED ERECTION PLANS FOR APPROVAL. PROVIDE SUFFIICIENT DETAILS IN THE DESIGN DRAWINGS TO ELIMINATE THE NEED FOR SHOP DRAWINGS, USING DEPARTMENT DRAFTING STANDARDS. SHOW A PROFFESIONAL ENGINEERS SEAL, LICENSED IN PENNSYLVANIA, WITH A VALID SIGNATURE IN INK, THE DATE SIGNED, A BUSINESS NAME AND BUSINESS ADDRESS, ON THE SHEET OF THE DESIGN DRAWINGS AND ALSO INDICATE "I CERTIFY THAT ALL ASSUMPTIONS MADE IN DESIGNING THIS WALL HAVE BEEN VALIDATED EITHER THROUGH CONSTRUCTION DETAILS OR SPECIAL NOTES AND INSTRUCTIONS TO THE FABRICATOR, ERECTOR AND CONTRACTOR". PLACE THE STATEMENT BELOW THE P.E. SEAL. THE DISTRICT BRIDGE ENGINEER WILL SIGN THE FINAL PLANS.

ON THE FIRST SHEET OF THE COMPUTATIONS, SHOW A PROFESSIONAL ENGINEERS SEAL, LICENSED IN PENNSYLVANIA, SIGNATURE, AND THE DATE SIGNED. DURA–HOLD WALL PARAMETERS AND OTHER LIMITATIONS ARE AS PER MANUFACTURERS DESIGN MANUAL PREPARED BY D'APPOLONIA ENGINEERING DIVISION OF GROUND TECHNOLOGY, INC. AND SUBMITTED TO THE CENTRAL OFFICE, BRIDGE DESIGN QUALITY CONTROL DIVISION IN MARCH, 1989. IN THE EVENT THAT CERTIAN DESIGN PARAMETERS, STRESSES OR SPECIFICATIONS ARE IN CONFLICT, THE FOLLOWING ORDER OF PREDOMINANCE GOVERNS:

a. DESIGN REQUIREMENTS LISTED IN "SPECIAL DRAWINGS AND SPECIAL REQUIREMENTS" (PART B)

b. PDT – DESIGN STANDARDS

c. PDT – DESIGN MANUAL PART 4 (STRUCTURES)

d. AASHTO LRFD BRIDGE DESIGN SPECIFICATIONS

IN THE EVENT THAT CLEAR ORDER OF PREDOMINANCE CANNOT BE ESTABLISHED OR A DIFFERENCE IN THE INTERPRETATION OF THE DESIGN CANNOT BE RESOLVED, THE CHIEF BRIDGE ENGINEER IS TO BE ARBITER AND HIS DECISION IS TO BE FINAL.

ALLOWABLE DIFFERENTIAL SETTLEMENT:

LONGITUDINAL DIFFERENTIAL SETTLEMENT = 1/2" IN ACCORDANCE WITH DM–4
TRANSVERSE DIFFERENTIAL SETTLEMENT = 1/4" (MAX.).
USE LRFD DESIGN METHODS.

DURA–HOLD WALL UNIT CAN BE USED ON A MINIMUM RADIUS OF 65 FEET WITHOUT BEING ALTERED.

SECTION II

CONSTRUCTION SPECIFICATIONS FOR DURA–HOLD WALLS
(STRUCTURAL APPLICATIONS)

MATERIAL

a. PROVIDE MATERIALS AND WORKMANSHIP IN ACCORDANCE WITH PA DOT PUBLICATION 408, AND SUPPLEMENTS THEREOF AND/OR SPECIAL CONDITIONS AS INDICATED OR SPECIFIED HEREIN. SECTION 714 OF PUBLICATION 408 APPLIES TO PRECAST CONCRETE PRODUCTS. MINIMUM DURABILITY FACTOR OF 80 WHEN TESTED IN ACCORDANCE WITH ASTM C666, PROCEDURE "A".

b. PRECAST CONCRETE UNITS:

PROVIDE PRECAST UNITS OF DRY–CAST, PORTLAND CEMENT CONCRETE ACHIEVING MINIMUM 28 DAY COMPRESSIVE STRENGTH OF 5000 POUNDS PER SQUARE INCH (PSI) [41.4 MPa] AS DETERMINED IN ACCORDANCE WITH ASTM C140. PROVIDE CEMENT CONFORMING TO SECTION 701, PUBLICATION 408. MINIMUM DURABILITY FACTOR OF 80 WHEN TESTED IN ACCORDANCE WITH ASTM C666, PROCEDURE "A". REINFORCE DURAHOLD TIEBACK UNITS AS SHOWN IN THE STANDARD DRAWINGS. USE EPOXY COATED REINFORCEMENT IF THE WALL IS LOCATED WITHIN SPLASHING DISTANCE FROM THE EDGE OF THE PAVEMENT (DM–4 PP 3.7.1.(b)) TO BE PLACED ON DRAWINGS AND SENT TO THE MANUFACTURER. PROVIDE TEMPERATURE AND SHRINKAGE REINFORCEMENT IN UNITS AS PER AASHTO REQUIREMENTS FOR ONE–EIGHTH SQUARE INCH OF REINFORCING PER VERTICAL FOOT OF WALL AND AS SHOWN IN THE STANDARD DETAIL DRAWINGS. STEEL WELDED WIRE FABRIC; CONFORMING TO SECTION 709.3 OF PUBLICATION 408 CAN BE UTILIZED. AGGREGATE USED IN THE MANUFACTURE OF PRECAST UNITS IS TO CONSIST OF WASHED, NATURAL MINERAL AGGREGATE CONFORMING TO THE REQUIREMENT OF SECTION 703, PUBLICATION 408.

c. SECTION 704, PROVIDE CLASS A CEMENT CONCRETE FOR FOOTINGS AND LEVELING PADS AND CLASS AA CEMENT CONCRETE FOR CURBS AND PARAPETS.

PROVIDE SMOOTH, WELDED WIRE FABRIC (WWF) OF THE GRID AND SIZE SPECIFIED, CONFORMING TO THE REQUIREMENTS OF SECTION 709.

d. PROVIDE PERFORATED PIPE OF THE REQUIRED DIAMETER (SECTION 610.2(a.) OF PUBLICATION 408).

e. PROVIDE GEOTEXTILE CLASS 2, TYPE "A" FABRIC TO THE REQUIREMENTS OF SECTION 735 OF PUBLICATION 408.

f. PROVIDE STRUCTURAL BACKFILL (#57 AGGREGATE) CONFORMING TO THE REQUIREMENTS OF SECTION 350.2, SECTION 703 PUBLICATION 408. DO NOT USE METALLURGICAL SLAG OR CINDERS.

g. PROVIDE RANDOM BACKFILL IN ACCORDANCE WITH SECTION 206, PUBLICATION 408.

MANUFACTURE OF UNITS

PRECAST CONCRETE UNITS ARE TO BE MANUFACTURED BY DURA–SALES OR A LICENSEE OF DURA–SALES. MANUFACTURE THE UNITS IN A CONCRETE PRODUCTS PLANT AT DEPARTMENT APPROVED FACILITIES IN ACCORDANCE WITH AN APPROVED QUALITY CONTROL PLAN. BEFORE PROCEEDING WITH PRODUCTION, PROVIDE A MODEL PRECAST UNIT BY THE MANUFACTURE FOR THE ENGINEERS APPROVAL TO ESTABLISH A GUIDE AND STANDARD FOR THE TYPES OF FINISH TO BE FURNISHED ON THE EXPOSED FACE. THIS MODEL IS TO BE KEPT AT THE MANUFACTURER'S PLANT TO BE USED FOR COMPARISON PURPOSES DURING PRODUCTION. FORMED SURFACES, OTHER THAN THE EXPOSED FACES, DO NOT REQUIRE A SPECIAL FINISH.

a. UNIT CHARACTERISTICS:

PROVIDE STANDARD RAIL AND TIEBACK UNITS WHIICH ARE CLOSED FACE AND CONTAIN OFFSET TONGUE AND GROOVE FOR SELF BATTERING. CHAMFER EXPOSED FACES OF UNITS TO CREATE A "RANDOM" BLOCK PATTERN.

CAST THE UNITS TO THE FOLLOWING NOMINAL DIMENSIONS:

DURA–HOLD 12"(H) x 24"(W) x 72"(L)

CAST ONE–HALF STANDARD AND ONE–HALF COPING RAIL UNITS TO ONE–HALF THE STANDARD LENGTH DIMENSION. CAST THE STANDARD COPING UNIT TO THE SAME DIMENSIONS AS THE STANDARD RAIL UNIT WITHOUT THE TONGUE. CAST CORNER UNITS (90 DEGREES) TO A LENGTH OF 60 INCHES.

PENNSYLVANIA
DEPARTMENT OF TRANSPORTATION
RECOMMENDED

Thomas P Macioce
CHIEF BRIDGE ENGINEER

MANUFACTURE OF UNITS (CONT.)

b. UNIT CASTING:

CAST CONCRETE WALL UNITS IN SUBSTANTIAL UNYEILDING STEEL FORMS. THE FORMS ARE TO BE PROPERTLY ASSEMBLED, CLEANED AND OILED BEFORE ANY CONCRETE IS PLACED THEREIN. DURING THE PLACING AND SETTING OF THE CONCRETE, THE FORMS ARE TO BE RIGIDLY HELD IN PLACE.

PROVIDE REINFORCEMENT AS INDICATED.

APPLY SATISFACTORY VIBRATION AND PRESSURE TO THE FRESH CONCRETE TO INSURE FILLING THE SPACE IN THE FORM, TO DENSIFY THE CONCRETE, AND TO COMPLETELY AND INTIMATELY CONTACT THE REINFORCEMENT.

PROVIDE CONCRETE MIX WITH UNIT WEIGHT EQUAL TO 143 TO 149 POUNDS PER CUBIC FOOT.

c. UNIT HANDLING AND STORAGE:
REFER TO APPROVED PENNDOT QUALITY CONTROL PLAN

d. UNIT QUALITY CONTROL:

REJECT PRECAST CONCRETE UNITS FOR ANY OF THE FOLLOWING REASONS:

1. INSUFFICIENT CONCRETE COVER CONFORMING TO THE REQUIREMENTS OF SECTION 1310 AND 6.05.
2. DEFECTS WHICH INDICATE IMPERFECT MIXING, PROPORTIONING, OR MOLDING.
3. FRACTURES AND CRACKS, WITH THE EXCEPTION OF SMALL SPALLS OR BROKEN EDGES THAT ARE SATISFACTORILY REPAIRED, WILL BE CONSIDERED CAUSE FOR REJECTION.
4. DIMENSIONS NOT CONFORMING TO THE FOLLOWING TOLERANCES:
   LENGTH, HEIGHT, AND WIDTH OF UNITS: ± 3/16"
   KEY (TONGUE AND GROOVE) DIMENSIONS: ± 1/8"
   DEVIATION FROM SQUARE ALONG BASE LENGTH DIAGONAL: ± 1/8"
   REINFORCING STEEL COVER: –1/4" TO +1/2"
5. SURFACE DEFECTS SUCH AS HONEYCOMBING OR OPEN TEXTURE. MARK THE REAR OF THE REJECTED UNITS "REJECTED FOR DEPARTMENT'S USE" WITH WATERPROOF PAINT.

e. TESTING AND INSPECTION:

ACCEPTABILITY OF THE PRECAST UNITS IS TO BE DETERMINED ON THE BASIS OF COMPRESSION TESTS AND VISUAL INSPECTION. FURNISH THE FACILITIES AND PERFORM ALL NECESSARY SAMPLING AND TESTING IN AN EXPEDITIOUS AND SATISFACTORY MANNER. ACCEPTANCE IS TO BE AS HEREIN SPECIFIED.

f. MARKING:

CLEARLY SCRIBE OR PAINT WITH WATERPROOF PAINT ON THE BACK OF EACH UNIT THE DATE OF MANUFACTURE, THE LOT OF PRODUCTION NUMBER AND THE PIECE MARK.

g. PROVIDE CERTIFICATION IN ACCORDANCE WITH SECTION 106.03(b).

Mark	Description	By	Chk'd	Recm'd	Date
#2	DELETED DRAWINGS AND ADDED DIM TO REINF.	RDK			11/1/11
#1	REMOVED REBAR, ADDED WELDED WIRE FABRIC	RDK			9/16/11

REVISIONS

COMMONWEALTH OF PENNSYLVANIA
DEPARTMENT OF TRANSPORTATION

DURA–HOLD WALL SYSTEM
DESIGN AND CONSTRUCTION SPECIFICATIONS

PennDOT DWG. NO. 95–144R PE

DES: RES | DWG: SOD | CHKD:

DEC. 20, 2011

CONSTRUCTION METHODS

a. EXCAVATION: EXCAVATE FOR THE FOUNDATION TO THE GRADE SHOWN ON THE CONTRACT DRAWINGS. SUB–GRADE MATERIALS FOR BEARING OF THE FOUNDATION ARE TO BE FIRM AND STABLE. PROOFROLL THE BOTTOM OF THE FOUNDATION EXCAVATION AND HAVE IT INSPECTED BY THE ENGINEER FOR ADEQUACY, JUST PRIOR TO CONSTRUCTING THE FOUNDATION. IN CUT APPLICATIONS, THE GEOMETRY OF TEMPORARY CUT SLOPES BEHIND THE WALL IS TO CONSTITUTE STABLE, UNYEILDING, EROSION RESISTANCE CONFIGURATION, WHICH PROVIDES ADEQUATE SPACE FOR CONSTRUCTION OF THE WALL, APPURTENANCES AND MAINTAINS SAFE WORKING CONDITIONS.

b. FOUNDATION CONSTRUCTION: CONSTRUCT COMPACTED, SELECT GRANULAR OR REINFORCED CONCRETE FOUNDATIONS WITH CURB TO THE PROPER DIMENSIONS, GRADES AND ALIGNMENTS AS SHOWN ON THE CONTRACT DRAWINGS. PROVIDE A LEVELING PAD OF A MINIMUM SIX (6) INCH THICKNESS OF COMPACTED SELECT BACKFILL OR SIX (6) INCH THICKNESS OF CONCRETE UNDER A REINFORCED CONCRETE FOUNDATION (WHEN REQUIRED). REINFORCEMENT FOR CONCRETE FOUNDATION IS TO BE DEVELOPED THROUGH CONSTRUCTION JOINTS AND KEYS ARE TO BE PROVIDED TO INTEGRATE DISCONTINUOUS CONCRETE POURS.

PLACE BOTTOM OF CONCRETE FOOTING OR COMPACTED SELECT GRANULAR FOUNDATION, AT A MINIMUM DEPTH EQUAL TO PREVAILING FROST DEPTH. BELOW FINISHED GROUND ELEVATION, UNLESS OTHERWISE INDICATED. DO NOT START ERECTION UNTIL FOUNDATION HAS BEEN APPROVED.

c. PLACEMENT OF PRECAST UNITS: CAREFULLY HANDLE AND ERECT THE PRECAST UNITS SO AS TO AVOID DAMAGE TO THE UNITS. ANY UNITS DAMAGED TO THE EXTENT WHERE THEIR ASTHETICS OR STRUCTURAL INTEGRITY IS COMPROMISED ARE TO BE REPLACED BY THE CONTRACTOR AT HIS OWN EXPENSE. ANY CRACKED UNIT IS TO BE MARKED "REJECTED FOR DEPARTMENT USE," REMOVED FROM THE JOB SITE AND REPLACED WITH AN ACCEPTABLE UNIT.

ASSEMBLE THE UNITS AS SHOWN ON THE ENGINEER–APPROVED CONTRACT DRAWINGS AND IN ACCORDANCE WITH THE MANUFACTURER'S RECOMMENDATIONS. SHIMMING OF UNITS TO MAINTAIN LEVELNESS IS ONLY TO BE PERFORMED USING A FRESHLY APPLIED THIN MORTAR PAD (NOT EXCEEDING 1/8" THICKNESS). MAINTAIN FULL BEARING OF THE PRECAST UNITS AND STAGGER JOINTS ON ALTERNATING LAYERS. DO NOT USE BLOCKS, WEDGES, OR OTHER DEVICES FOR PERMANENT SHIMMING OF WALL UNITS. TAKE SPECIAL CARE IN SETTING THE BOTTOM COURSE OF PRECAST UNITS TO ENSURE TRUE LINE AND GRADE.

AS SHOWN ON THE APPROVED DRAWINGS, PROVIDE THE CENTER TO CENTER SPACING BETWEEN TIEBACKS ALONG A GIVEN RAIL LEVEL. OF EIGHT (8) FEET = FOR DURA–HOLD UNITS.

EMBED THE BASE RAILS OF SINGLE AND DOUBLE CRIB WALL A MINIMUM OF THREE AND A HALF (3.5) FEET BELOW FINISHED GRADE IN FRONT OF THE WALL.

ARRANGEMENT OF THE TIEBACK UNITS FOR THE RESPECTIVE WALL SYSTEMS IS TO CONFORM TO THAT SHOWN ON APPROVED DRAWINGS.

NO REPAIRS ARE PERMITTED UNLESS IT IS FOR AESTHETIC REASONS. MAKE REPAIRS AT JOB SITE, BY EXPERIENCED PERSONNEL, UTILIZING METHODS AND MATERIALS RECOMMENDED BY THE MANUFACTURER AND APPROVED BY THE ENGINEER.

d. BACKFILLING AND COMPACTION: PLACE STRUCTURAL BACKFILL #57 AGGREGATE WITHIN THE CRIBS AND TO A MINIMUM OF TWO (2) FEET BEHIND THE WALL IN ACCORDANCE WITH RC 12 AND PUBLICATION 408, SECTIONS 703.

PLACE AND COMPACT RANDOM BACKFILL IN ACCORDANCE WITH RC 12 AND PUBLICATION 408, SECTION 206.

KEY RANDOM BACKFILL INTO THE SLOPES OF UNDISTURBED MATERIAL AT LEAST EVERY THIRD LIFT.

BACKFILLING IS TO PROGRESS SIMULTANEOUSLY WITH ERECTION OF THE PRECAST CONCRETE WALL UNITS, UNLESS, IN THE OPINION OF THE ENGINEER, A DIFFERENT PROCEDURE IS REQUIRED.

AT THE END OF EACH DAY'S OPERATION, SLOPE THE LAST LEVEL OF THE BACKFILL AWAY FROM THE THE WALL FACE. IN ADDITION, DO NOT ALLOW SURFACE RUNOFF FROM ADJACENT AREAS TO ENTER THE WALL CONSTRUCTION SITE.

CONSTRUCTION METHODS (CONT.)

e. DRAINAGE: SEPERATE ALL INTERFACING MATERIALS OF DISTINCTLY DIFFERENT GRADATION BY GEOTEXTILE FILTER FABRIC.

INSTALL DRAINAGE SYSTEM BEHIND THE WALL AS INDICATED AND AS SHOWN ON THE APPROVED SHOP DRAWINGS. DRAINAGE SYSTEMS CONSIST OF TWO (2) FEET MINIMUM WIDTH OF SELECT BACKFILL BEHIND THE WALL TO IMPROVE DRAINAGE CONDITIONS. DIRECT SEEPAGE FROM DRAINAGE PIPE TO WEEP HOLES ALONG THE EXTERIOR FACE OF THE WALL OR DIRECTLY TO STORM WATER CONVEYANCES.

f. DEWATERING: FURNISH, INSTALL, OPERATE, AND MAINTAIN SATISFACTORY DEWATERING SYSTEMS AS REQUIRED TO MAINTAIN THE SITE IN A DRY AND WORKABLE CONDITION. INCLUDE ALL EQUIPMENT AND MATERIALS AND CONTINUE AS LONG AS NECESSARY.

g. TECHNICAL ASSISTANCE: WHERE DURA–HOLD PRECAST RETAINING WALL SYSTEMS ARE CONSTRUCTED, HAVE A COMPANY REPRESENTATIVE AT THE PROJECT SITE FOR THE FIRST FIVE (5) DAYS OF WALL CONSTRUCTION AS A MINIMUM TO ASSIST THE FABRICATOR, CONTRACTOR, AND ENGINEER. PROVIDE A TECHNICAL REPRESENTATIVE TO ASSIST IN THE EVENT UNUSUAL PROBLEMS OR SPECIAL CIRCUMSTANCES ARISE.

CONSTRUCTION & INSTALLATION PROCEDURES

a. EXCAVATION: ENSURE THAT EXCAVATED SLOPES ARE CUT TO STABLE CONFIGURATIONS AND SURFACE DRAINAGE FROM AREAS OUTSIDE THE EXCAVATION IS CONVEYED AWAY FROM EXCAVATED AREAS. ENSURE THAT SURFACE DRAINAGE COLLECTED WITHIN AN EXCAVATION IS CONVEYED AWAY FROM THE AREA IN CONFORMANCE WITH THE SEDIMENTATION CONTROL PLAN.

ALLOW SUFFICIENT EXCAVATION BELOW THE LEVELING PAD GRADE AND BEHIND THE WALL FOR PLACEMENT OF BASE MATERIAL BELOW THE WALL AND GRANULAR BACKFILL BEHIND THE WALL.

ALLOWING FOR TIEBACK UNITS, FULLY EXCAVATE OR CHANNEL CUT THE AREA BEHIND THE WALL BASE WITH ALLOWABLE ROOM BEHIND THE WALL FOR PLACEMENT OF GRANULAR BACKFILL.

b. BASE: PLACE THE BASE OR FIRST COURSE FOR TOE, HEEL, AND CENTRAL RAILS ON A CONCRETE OR COMPACTED SELECT GRANULAR BACKFILL FOUNDATION, AND CHECK FOR LEVEL IN ALL DIRECTIONS.

PROVIDE A MINIMUM THICKNESS OF SIX (6) INCHES OF COMPACTED SELECT GRANULAR BACKFILL OR PLAIN CONCRETE, WHERE STRIP FOOTING IS NOT REQUIRED.

c. STACKING: STACK ALL DURA–HOLD UNITS USING A SCISSOR CLAMP MOUNTED ON A BACKHOE, CRANE OR OTHER SUITABLE LIFTING DEVICE.

SWEEP THE TONGUE ANG GROOVE FREE OF PRODUCTION BURRS AND DEBRIS PRIOR TO INSTALLING A UNIT AT THE NEXT HIGHER LEVEL. SLIDE EACH UNIT INTO PLACE WITH BARS OR OTHER DEVICES TO PROPERLY "SEAT" THE UNIT.

CUT UNITS FOR CORNERS OR WALL ENDS AS REQUIRED USING A MASONRY POWER SAW.

d. TIEBACKS: STACK TIEBACKS AS GENERALLY DESCRIBED IN STACKING.

"SEAT" THE UNIT AT THE FRONT AND REAR OF THE WALL.

FOR DURA–HOLD WALLS, PROVIDE REAR SUPPORT FOR THE TIEBACK USING STANDARD UNITS (THE BACK FACE MAY BE "OPEN" OR "CLOSED" FACED DEPENDING ON THE DESIGN).

CONSTRUCTION & INSTALLATION PROCEDURES (CONT.)

e. BACKFILL: PLACE SPECIFIED BACKFILL WITHIN AND TO THE REQUIRED DEPTHS BEHIND THE THE WALL. PLACE AND COMPACT AGGREGATE IN LIFTS AS WALL COURSES ARE INSTALLED. AS REQUIRED, PLACE GEOTEXTILE BETWEEN GRANULAR BACKFILL AND RANDOM BACKFILL MATERIALS.

ENSURE THE GRADE AND CONNECTIVITY OF DRAINAGE CONDUITS IN THE BACKFILL USING LEVEL SURVEYS AND WATER FLOW TESTS.

TAKE CARE WHEN OPERATING, BACKFILLING AND/OR UTILIZING COMPACTION EQUIPMENT NEAR THE WALL TO AVOID DISLODGING INSTALLED UNITS AND INDUCING ADDITIONAL STRESS.

f. COPING UNITS: STACK COPING UNITS AS DISCRIBED IN STACKING.

AS REQUIRED, CORE COPING UNITS FOR INSTALLATION OF FENCE OR GUIDE RAIL POSTS (THE EFFECT OF MOUNTING FACE OR OTHER STRUCTURES ON THE WALL MUST BE ASSESSED BY A QUALIFIED, REGISTERED PROFESSIONAL ENGINEER).

CUT COPING UNITS AS REQUIRED USING A MASONRY POWER SAW.

PROTECT EXPOSED REINFORCEMENT IN ACCORDANCE WITH SECTION 1092.11.1 AND 1092.12.2 OF PUBLICATION 408.

g. CORNERS: STACK CORNER UNITS AS DESCRIBED IN STACKING.

h. FINISHED GRADES: CHECK FINISHED GRADES ABOVE AND AT THE BASE OF THE WALL AFTER THE WALL ERECTION AND BACKFILLING OPERATIONS ARE COMPLETE.

ENSURE THAT ALL DRAINAGE MEASURES ABOVE THE WALL SUCH AS DITCHES AND SWALES ARE IN PLACE AND PROPERLY GRADED AFTER WALL ERECTION AND BACKFILLING OPERATIONS ARE COMPLETE. CHECK THE UPPER WALL COURSES TO ASSURE THAT UNITS HAVE NOT BEEN DISLODGED.

CHECK THE NUMBER OF WALL COURSES BELOW THE FINISHED GRADE AT THE TOE OF THE WALL TO ENSURE THE WALL IS CORRECTLY EMBEDDED AND THAT A SLIGHT DOWNHILL SLOPE OF THE FINISHED GRADE EXISTS AWAY FROM THE WALL.

Mark	Description	By	Chk'd	Recm'd	Date
#3	FOUNDATION NOTES & FROST PROTECTION NOTE	RDK			12/19/11
#2	DELETED DRAWINGS AND ADDED DIM TO REINF.	RDK			11/1/11
#1	REMOVED REBAR, ADDED WELDED WIRE FABRIC	RDK			9/16/11

REVISIONS

COMMONWEALTH OF PENNSYLVANIA
DEPARTMENT OF TRANSPORTATION

DURA–HOLD WALL SYSTEM
DESIGN AND CONSTRUCTION SPECIFICATIONS

PennDOT DWG. NO. 95–144R PE

DES: RES | DWG: SOD | CHKD:

DEC. 20, 2011

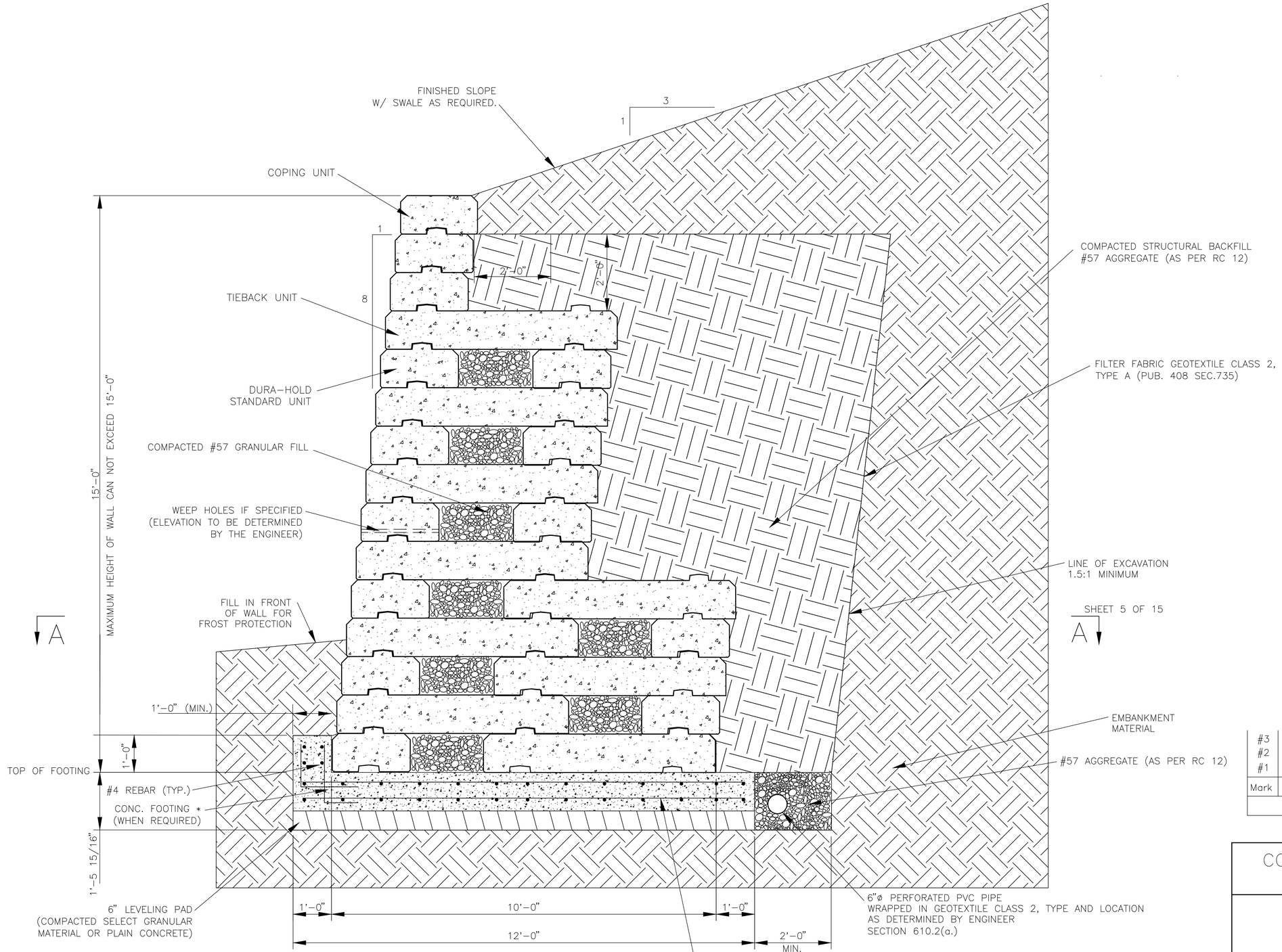

* REINFORCED CONCRETE FOUNDATION IS NOT ALWAYS REQUIRED. SITE SPECIFIC SOIL BEARING CAPACITY WILL DETERMINE WHETHER PLAIN CRUSHED STONE/ COMPACTED SELECT GRANULAR BACKFILL MATERIAL OR REINFORCED CONCRETE FOUNDATION IS REQUIRED.

TYPICAL SECTION ON FILL

SCALE: 3/4"=1'-0"

(FOR RETAINING WALLS IN CUT FOLLOW STD. DWG. RC-12)

Mark	Description	By	Chk'd	Recm'd	Date
#3	FOUNDATION NOTES & FROST PROTECTION NOTE	RDK			12/19/11
#2	DELETED DRAWINGS AND ADDED DIM TO REINF.	RDK			11/1/11
#1	REMOVED REBAR, ADDED WELDED WIRE FABRIC	RDK			9/16/11

REVISIONS

COMMONWEALTH OF PENNSYLVANIA
DEPARTMENT OF TRANSPORTATION

DURA-HOLD WALL SYSTEM
DOUBLE CRIB WALL
TYPICAL CROSS SECTION

PennDOT DWG. NO. 95-144R PE

DES: RSM | DWG: SOD | CHKD:

DEC. 20, 2011

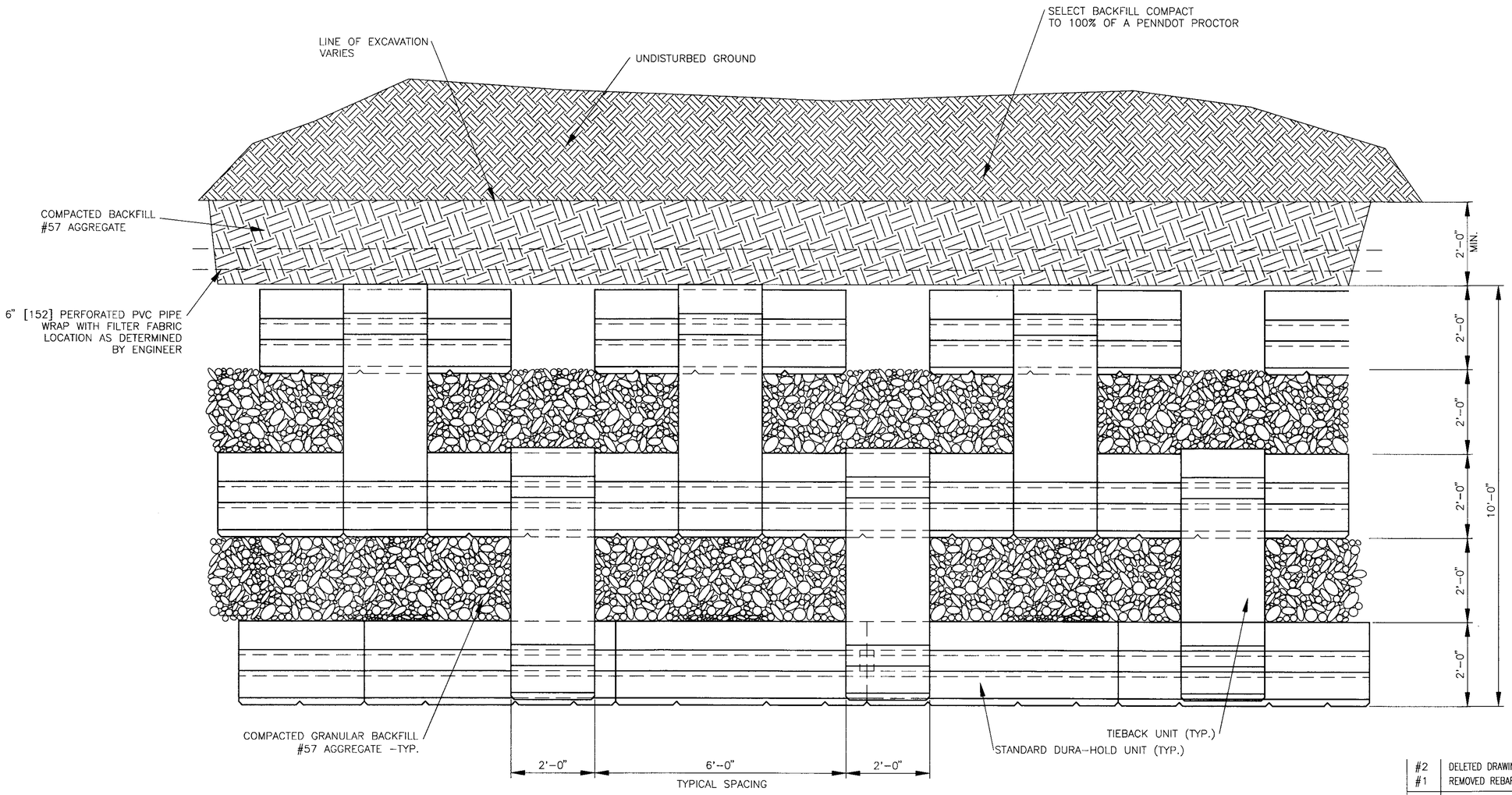

SECTION A–A

FROM SHEET 4 OF 15
SCALE: 3/4"=1'-0"

Mark	Description	By	Chk'd	Recm'd	Date
#2	DELETED DRAWINGS AND ADDED DIM TO REINF.	RDK			11/1/11
#1	REMOVED REBAR, ADDED WELDED WIRE FABRIC	RDK			9/16/11

REVISIONS

COMMONWEALTH OF PENNSYLVANIA
DEPARTMENT OF TRANSPORTATION

DURA–HOLD WALL SYSTEM
DOUBLE CRIB WALL
TYPICAL PLAN VIEW

PennDOT DWG. NO. 95–144R PE

DES: RSM	DWG: SOD	CHKD:

DEC. 20, 2011

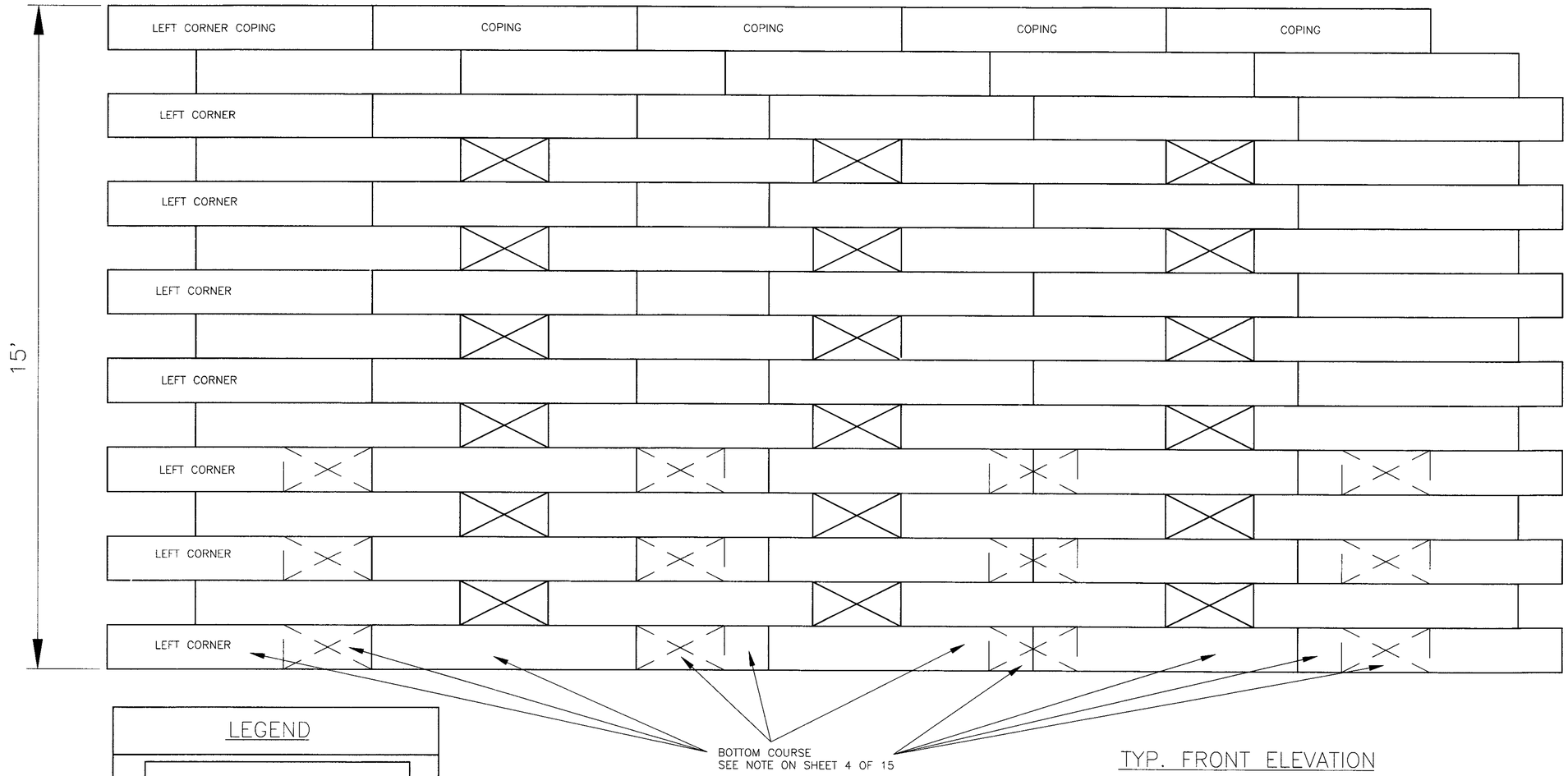

TYP. FRONT ELEVATION

SCALE: 3/4"=1'-0"

LEGEND

STANDARD UNIT

HALF UNIT

TIEBACK UNIT; SINGLE CRIB

TIEBACK UNIT; DOUBLE CRIB

Mark	Description	By	Chk'd	Recm'd	Date
#2	DELETED DRAWINGS AND ADDED DIM TO REINF.	RDK			11/1/11
#1	REMOVED REBAR, ADDED WELDED WIRE FABRIC	RDK			9/16/11

REVISIONS

COMMONWEALTH OF PENNSYLVANIA
DEPARTMENT OF TRANSPORTATION

DURA-HOLD WALL SYSTEM
DOUBLE CRIB WALL
TYPICAL PLAN VIEW

PennDOT DWG. NO. 95-144R PE

DES: RSM	DWG: SOD	CHKD:

DEC. 20, 2011

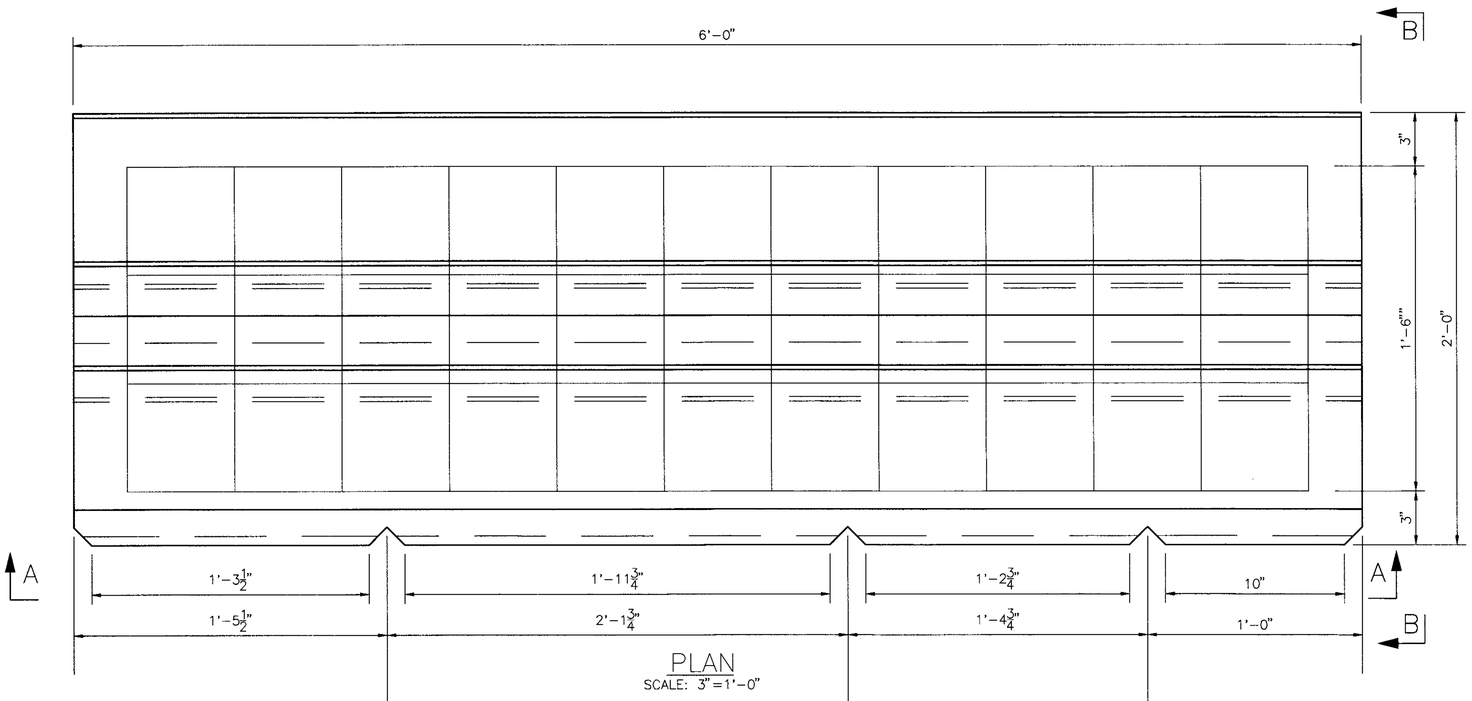

PLAN
SCALE: 3"=1'-0"

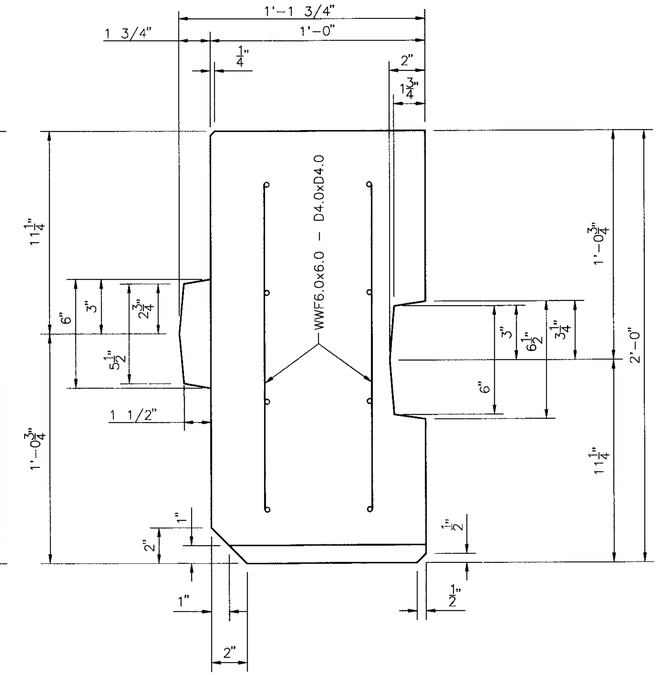

SECTION B–B
SCALE: 3"=1'-0"

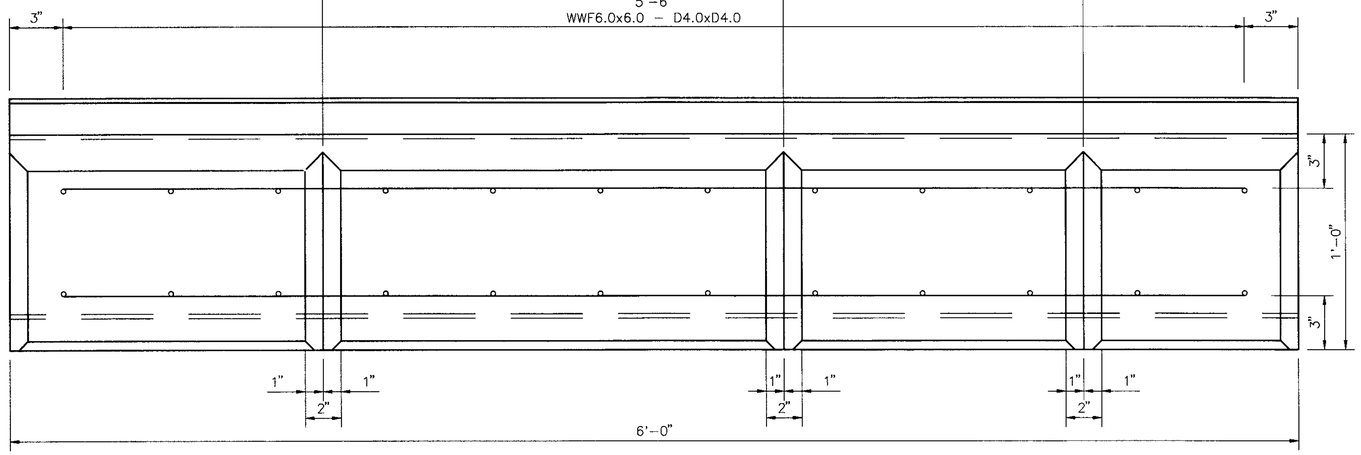

SECTION A–A
SCALE:3"=1'-0"

Mark	Description	By	Chk'd	Recm'd	Date
#2	DELETED DRAWINGS AND ADDED DIM TO REINF.	RDK			11/1/11
#1	REMOVED REBAR, ADDED WELDED WIRE FABRIC	RDK			9/16/11

REVISIONS

COMMONWEALTH OF PENNSYLVANIA
DEPARTMENT OF TRANSPORTATION

DURA–HOLD WALL SYSTEM
STANDARD UNIT

PennDOT DWG. NO. 95–144R PE

DES: RSM | DWG: SOD | CHKD:

DEC. 20, 2011

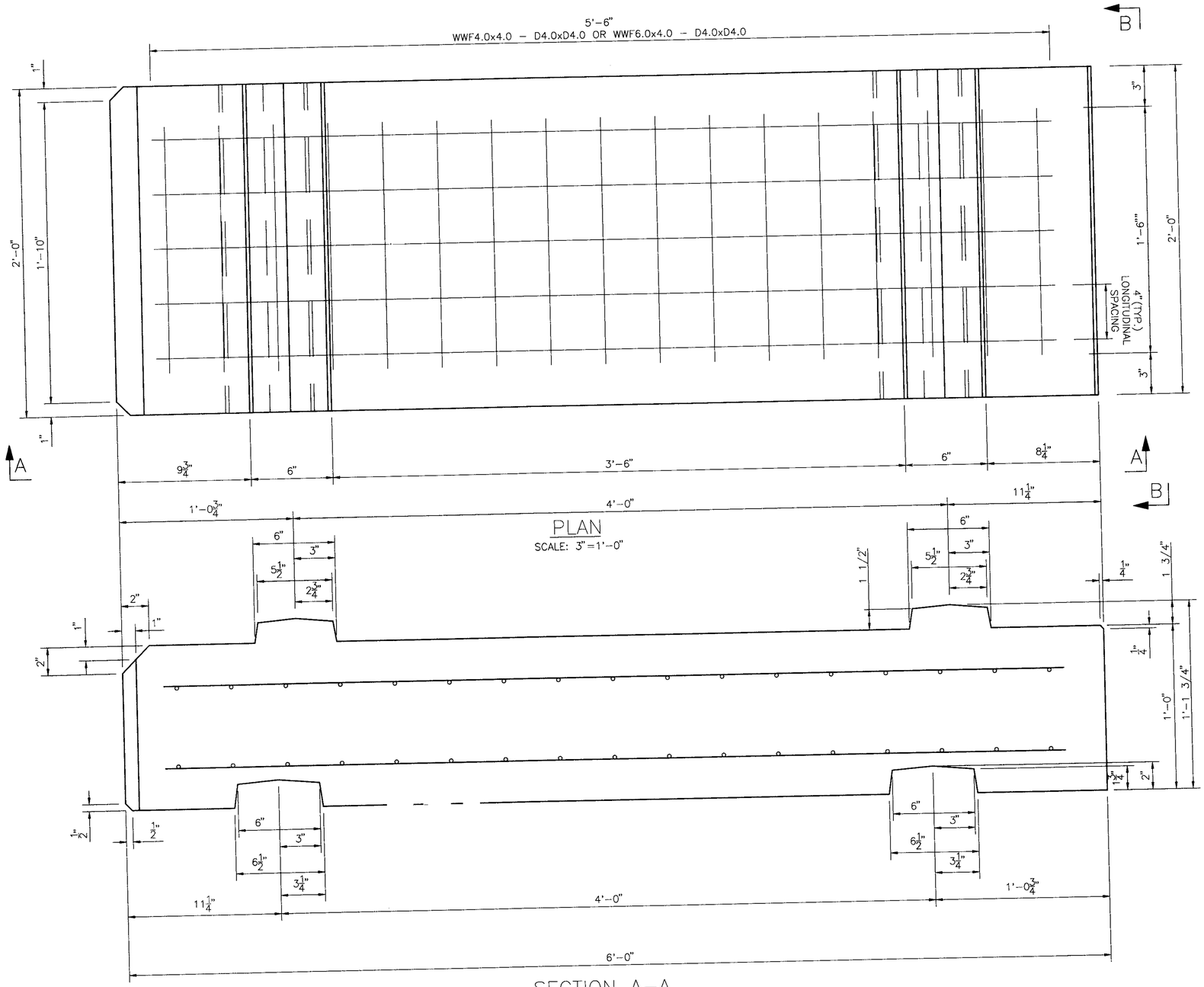

PLAN
SCALE: 3" = 1'-0"

SECTION A–A
SCALE: 3" = 1'-0"

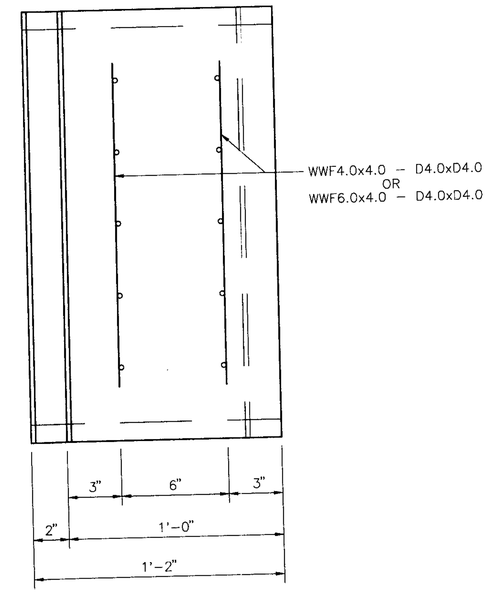

SECTION B–B
SCALE: 3" = 1'-0"

Mark	Description	By	Chk'd	Recm'd	Date
#2	DELETED DRAWINGS AND ADDED DIM TO REINF.	RDK			11/1/11
#1	REMOVED REBAR, ADDED WELDED WIRE FABRIC	RDK			9/16/11

REVISIONS

COMMONWEALTH OF PENNSYLVANIA
DEPARTMENT OF TRANSPORTATION

DURA–HOLD WALL SYSTEM
TIEBACK UNIT

PennDOT DWG. NO. 95–144R PE

DES: RSM | DWG: SOD | CHKD:

DEC. 20, 2011

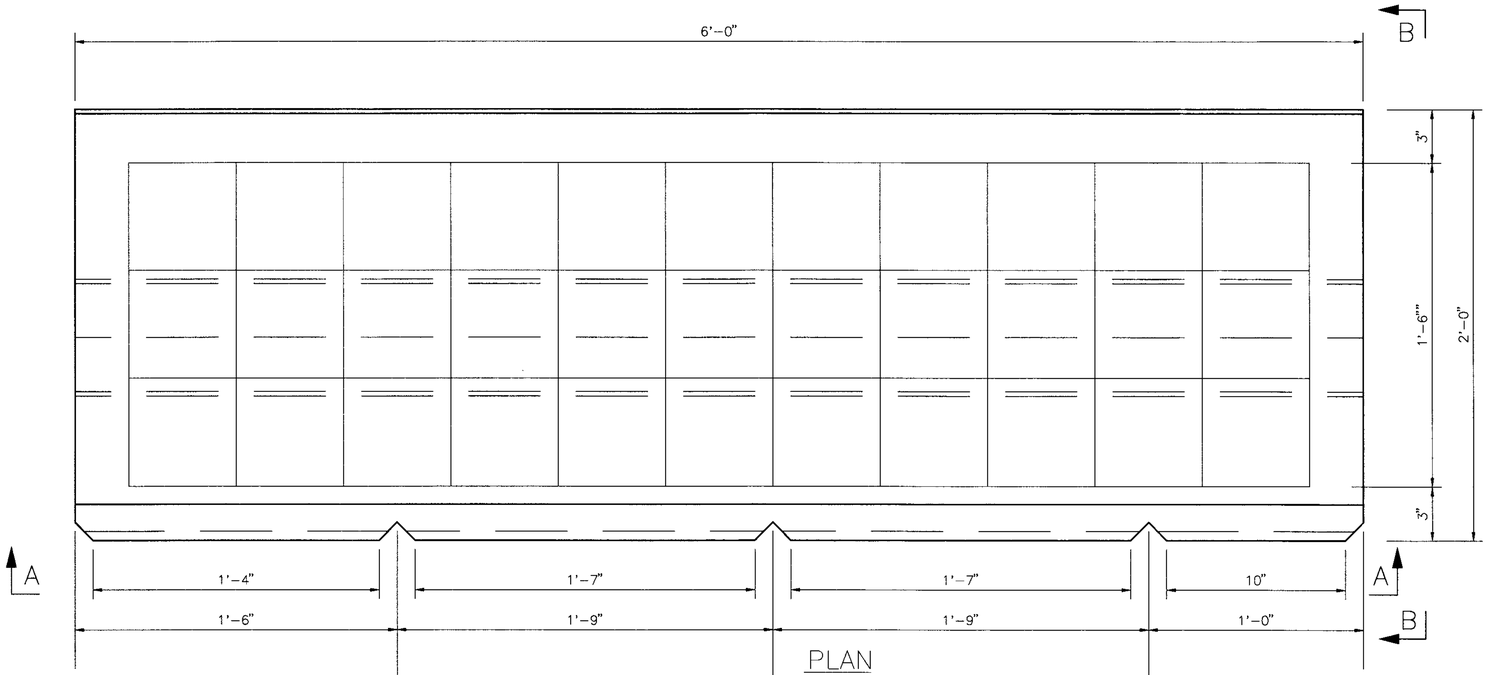

PLAN
SCALE: 3"=1'-0"

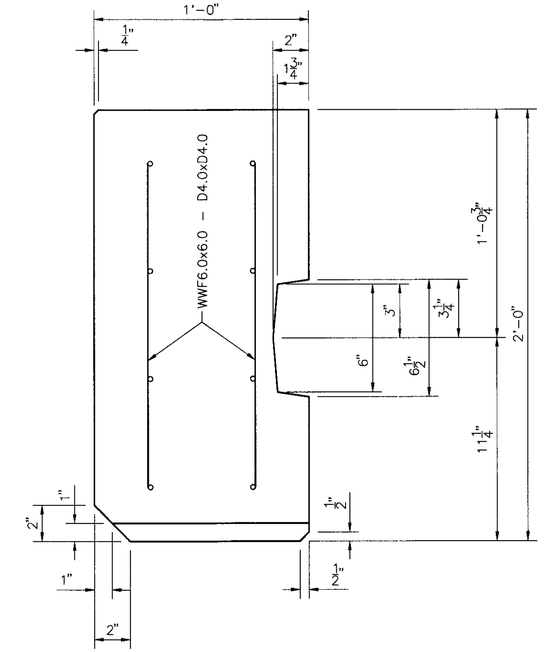

SECTION B-B
SCALE: 3"=1'-0"

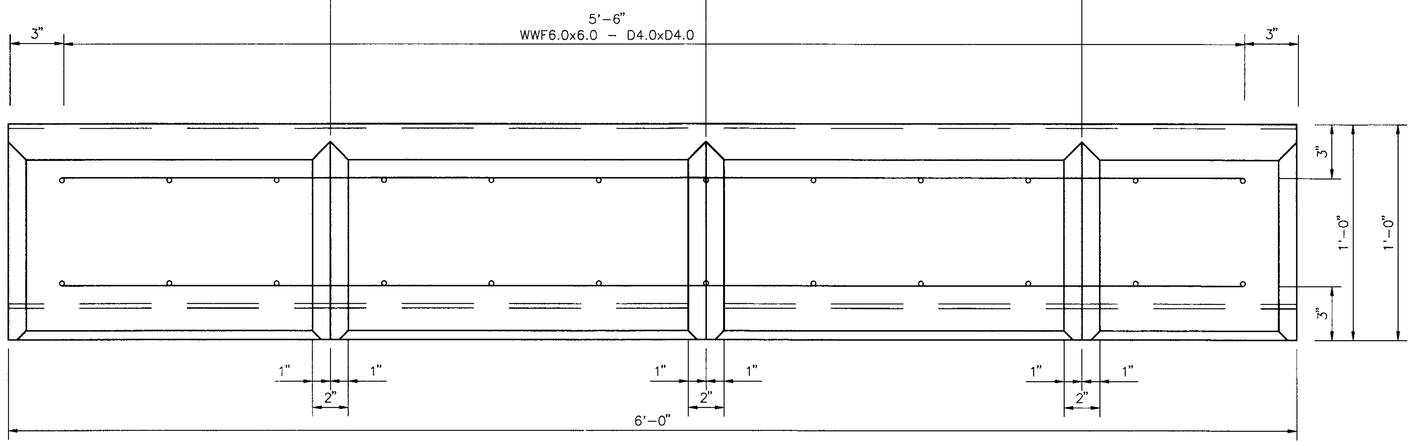

SECTION A-A
SCALE: 3"=1'-0"

Mark	Description	By	Chk'd	Recm'd	Date
#2	DELETED DRAWINGS AND ADDED DIM TO REINF.	RDK			11/1/11
#1	REMOVED REBAR, ADDED WELDED WIRE FABRIC	RDK			9/16/11

REVISIONS

COMMONWEALTH OF PENNSYLVANIA
DEPARTMENT OF TRANSPORTATION

DURA-HOLD WALL SYSTEM
COPING UNIT

PennDOT DWG. NO. 95-144R PE

DES: RSM	DWG: SOD	CHKD:

DEC. 20, 2011

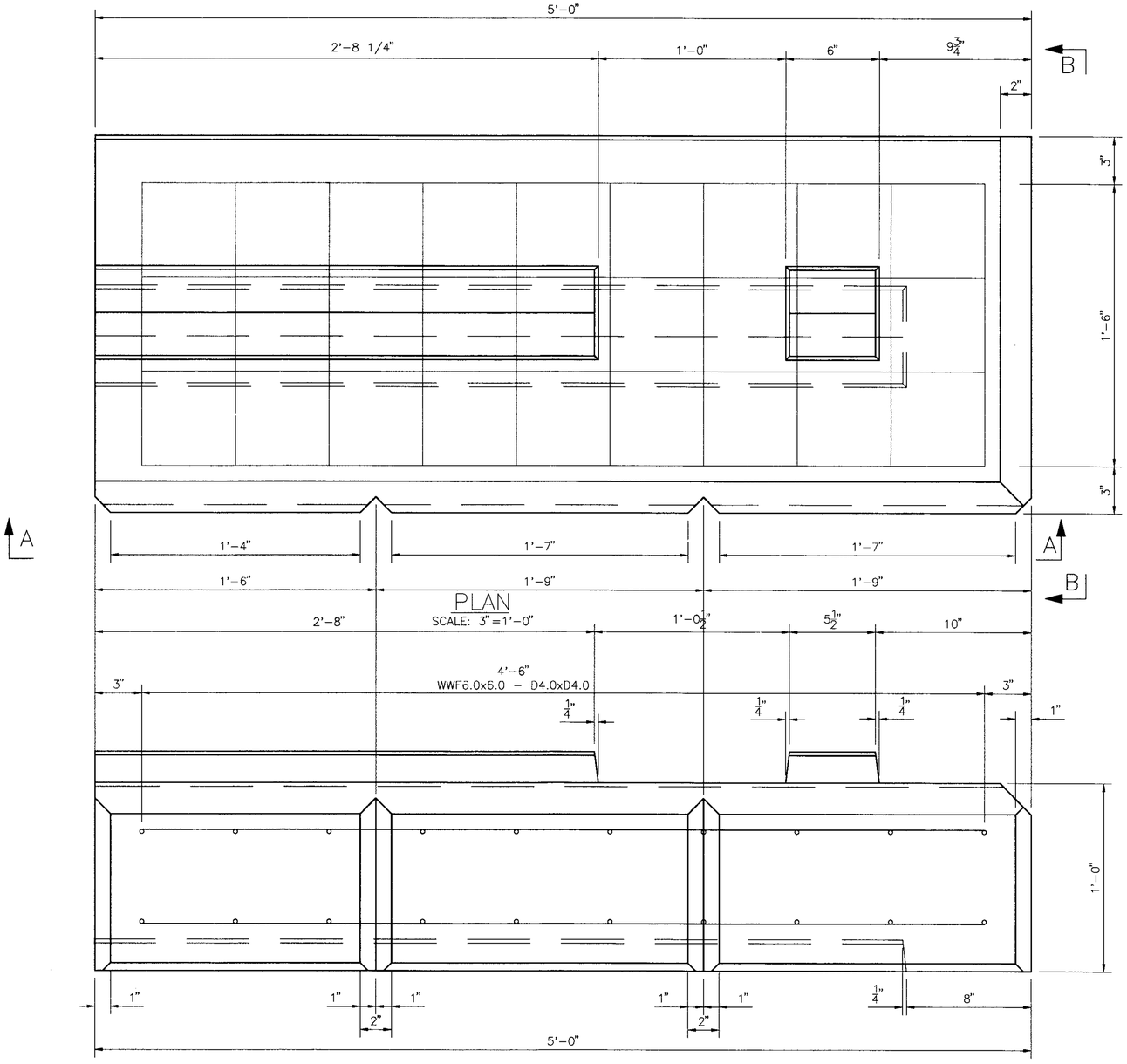

PLAN
SCALE: 3"=1'-0"

SECTION A-A
SCALE: 3"=1'-0"

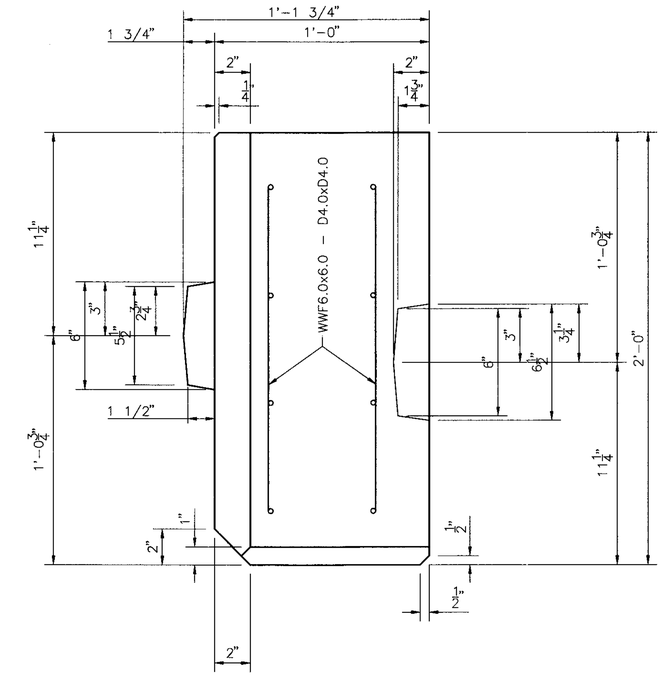

SECTION B-B
SCALE: 3"=1'-0"

Mark	Description	By	Chk'd	Recm'd	Date
#2	DELETED DRAWINGS AND ADDED DIM TO REINF.	RDK			11/1/11
#1	REMOVED REBAR, ADDED WELDED WIRE FABRIC	RDK			9/16/11

REVISIONS

COMMONWEALTH OF PENNSYLVANIA
DEPARTMENT OF TRANSPORTATION

DURA-HOLD WALL SYSTEM
RIGHT CORNER UNIT

PennDOT DWG. NO. 95-144R PE

DES: RSM | DWG: SOD | CHKD:

DEC. 20, 2011

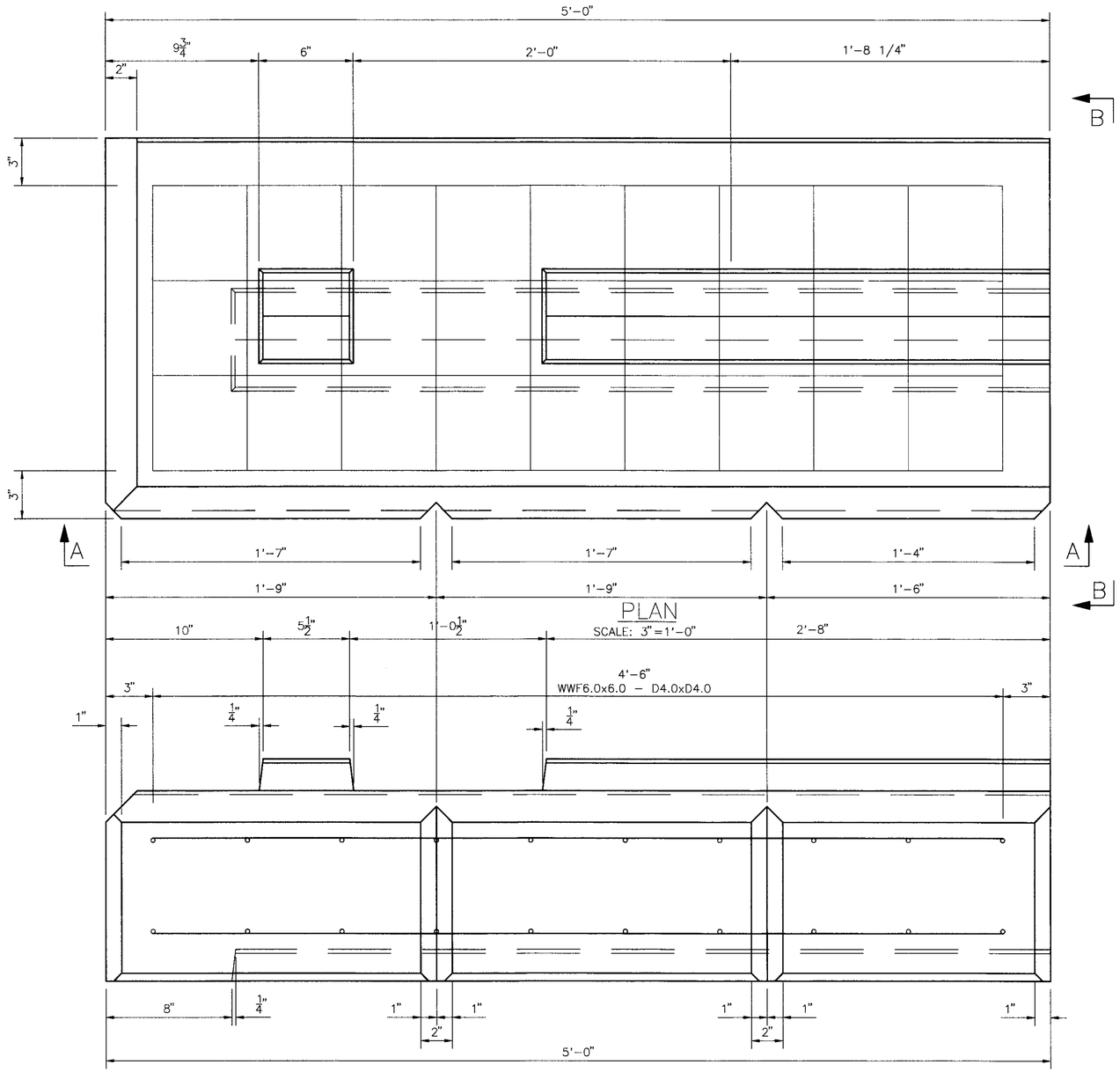

PLAN
SCALE: 3"=1'-0"

SECTION A–A
SCALE: 3"=1'-0"

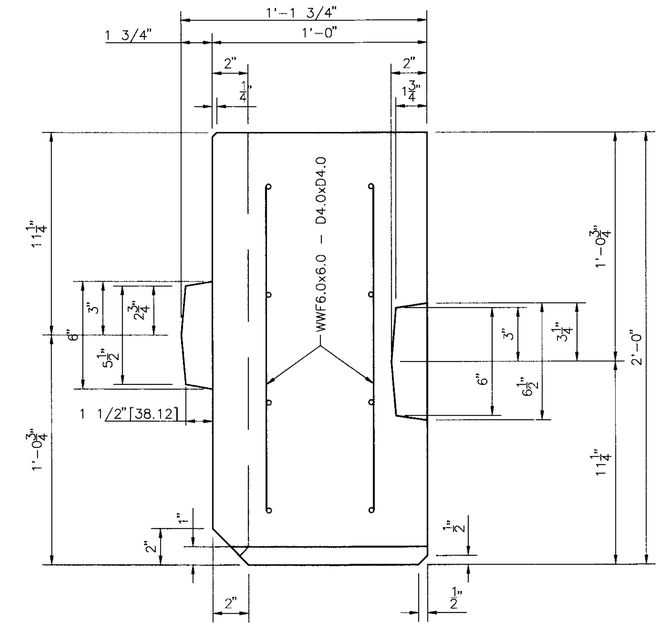

SECTION B–B
SCALE: 3"=1'-0"

Mark	Description	By	Chk'd	Recm'd	Date
#2	DELETED DRAWINGS AND ADDED DIM TO REINF.	RDK			11/1/11
#1	REMOVED REBAR, ADDED WELDED WIRE FABRIC	RDK			9/16/11

REVISIONS

COMMONWEALTH OF PENNSYLVANIA
DEPARTMENT OF TRANSPORTATION

DURA–HOLD WALL SYSTEM
LEFT CORNER UNIT

PennDOT DWG. NO. 95–144R PE

DES: RSM	DWG: SOD	CHKD:

DEC. 20, 2011

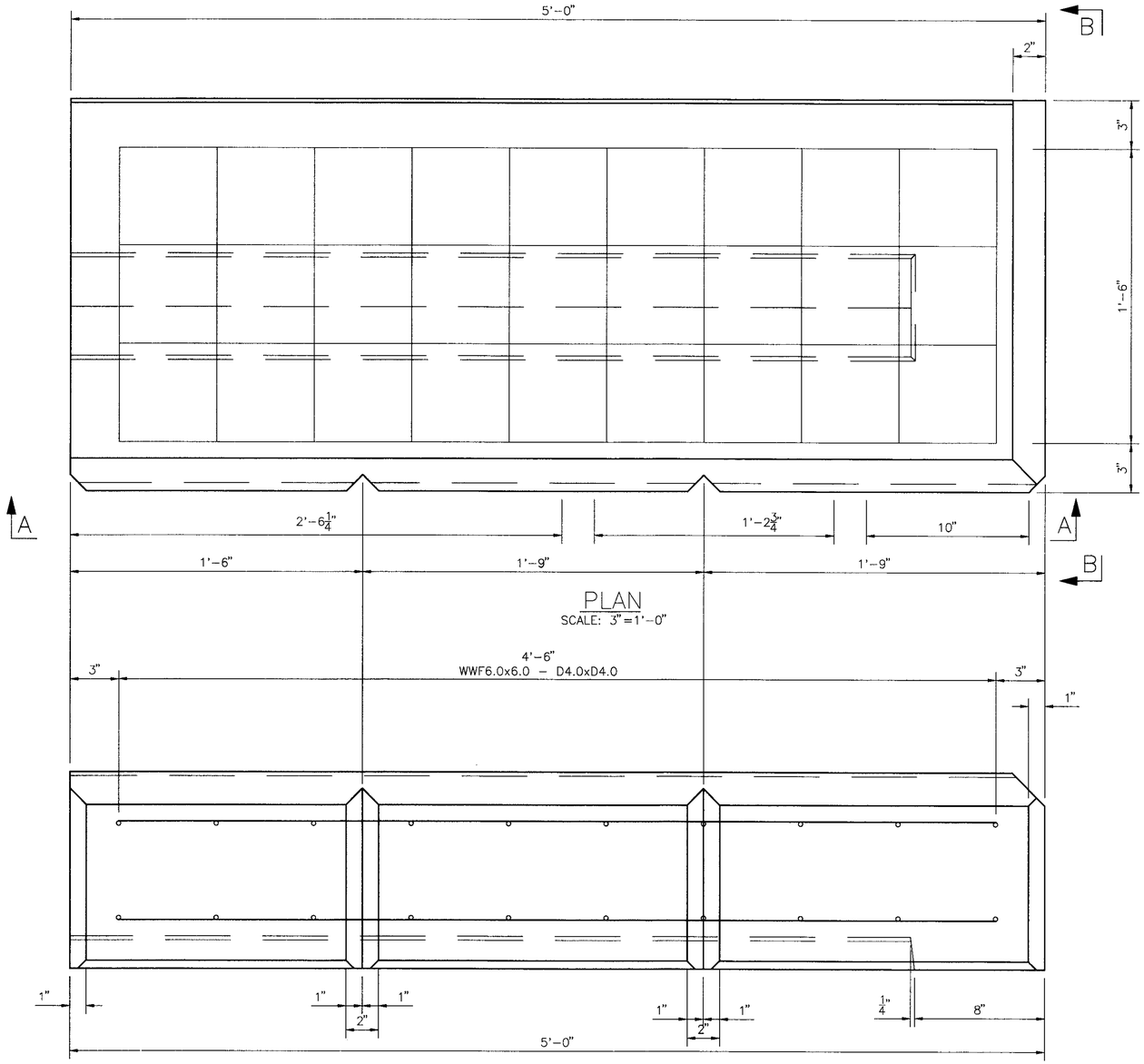

PLAN
SCALE: 3"=1'-0"

SECTION A-A
SCALE: 3"=1'-0"

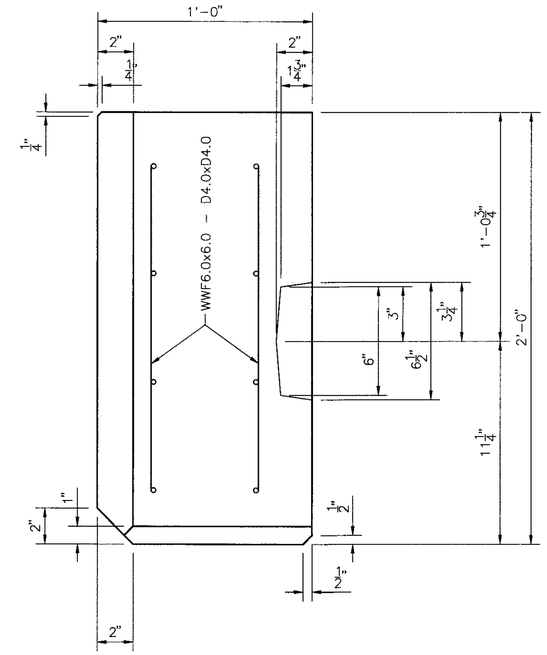

SECTION B-B
SCALE: 3"=1'-0"

Mark	Description	By	Chk'd	Recm'd	Date
#2	DELETED DRAWINGS AND ADDED DIM TO REINF.	RDK			11/1/11
#1	REMOVED REBAR, ADDED WELDED WIRE FABRIC	RDK			9/16/11

REVISIONS

COMMONWEALTH OF PENNSYLVANIA
DEPARTMENT OF TRANSPORTATION

DURA-HOLD WALL SYSTEM
RIGHT CORNER COPING UNIT

PennDOT DWG. NO. 95-144R PE

DES: RSM	DWG: SOD	CHKD:

DEC. 20, 2011

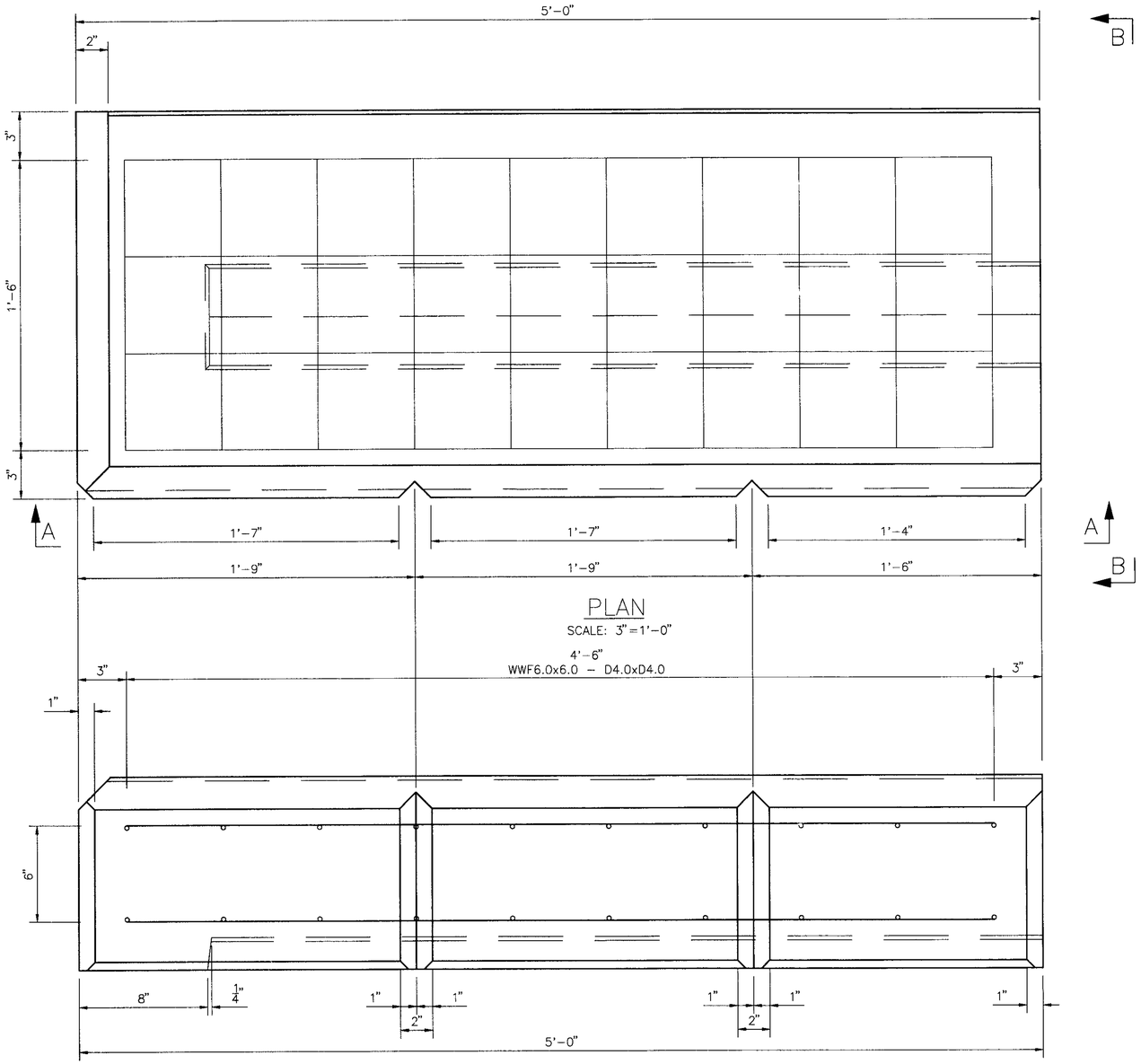

PLAN

SCALE: 3" = 1'-0"

SECTION A-A

SCALE: 3" = 1'-0"

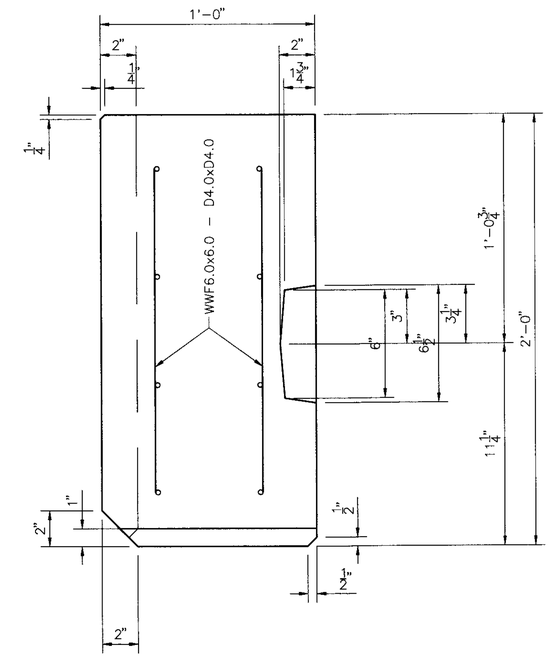

SECTION B-B

SCALE: 3" = 1'-0"

Mark	Description	By	Chk'd	Recm'd	Date
#2	DELETED DRAWINGS AND ADDED DIM TO REINF.	RDK			11/1/11
#1	REMOVED REBAR, ADDED WELDED WIRE FABRIC	RDK			9/16/11

REVISIONS

COMMONWEALTH OF PENNSYLVANIA
DEPARTMENT OF TRANSPORTATION

DURA-HOLD WALL SYSTEM
LEFT CORNER COPING UNIT

PennDOT DWG. NO. 95-144R PE

DES: RSM	DWG: SOD	CHKD:

DEC. 20, 2011

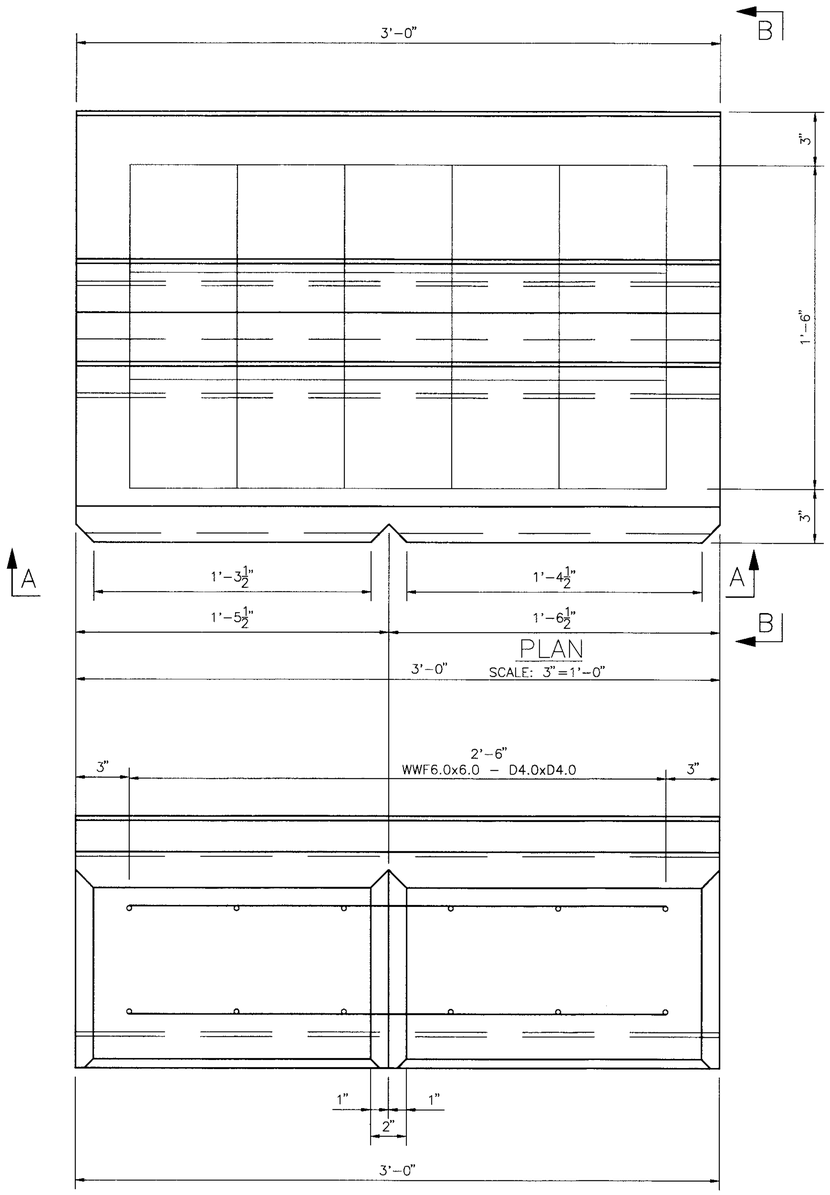

PLAN

SCALE: 3"=1'-0"

SECTION A–A

SCALE: 3"=1'-0"

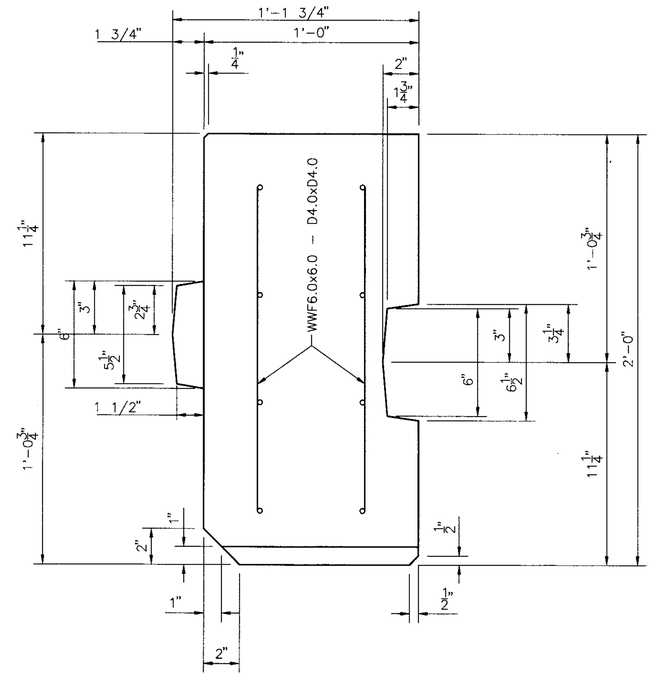

SECTION B–B

SCALE: 3"=1'-0"

Mark	Description	By	Chk'd	Recm'd	Date
#2	DELETED DRAWINGS AND ADDED DIM TO REINF.	RDK			11/1/11
#1	REMOVED REBAR, ADDED WELDED WIRE FABRIC	RDK			9/16/11

REVISIONS

COMMONWEALTH OF PENNSYLVANIA
DEPARTMENT OF TRANSPORTATION

DURA–HOLD WALL SYSTEM
HALF UNIT

PennDOT DWG. NO. 95–144R PE

DES: RSM	DWG: SOD	CHKD:

DEC. 20, 2011

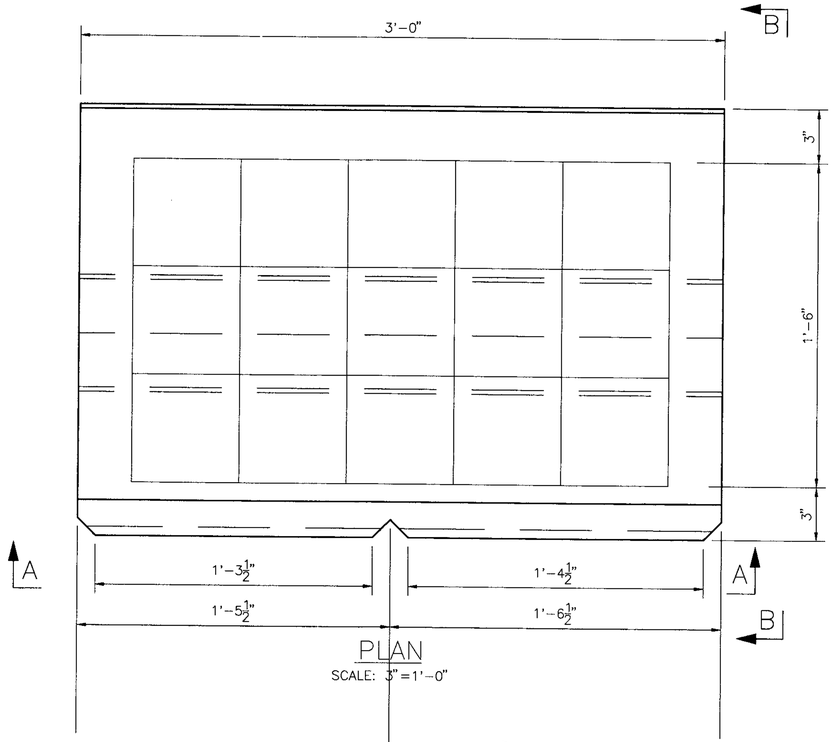

PLAN

SCALE: 3" = 1'-0"

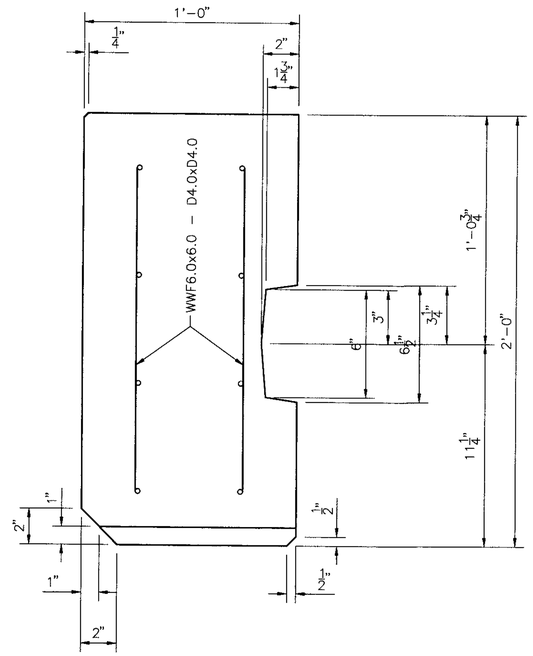

SECTION B-B

SCALE: 3" = 1'-0"

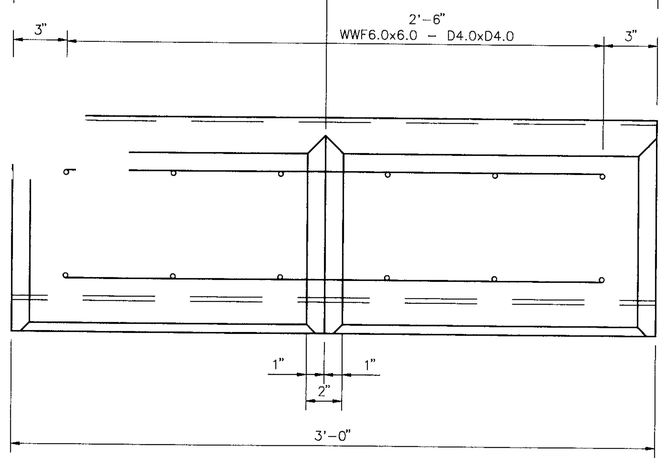

SECTION A-A

SCALE: 3" = 1'-0"

Mark	Description	By	Chk'd	Recm'd	Date
#2	DELETED DRAWINGS AND ADDED DIM TO REINF.	RDK			11/1/11
#1	REMOVED REBAR, ADDED WELDED WIRE FABRIC	RDK			9/16/11

REVISIONS

COMMONWEALTH OF PENNSYLVANIA
DEPARTMENT OF TRANSPORTATION

DURA-HOLD WALL SYSTEM
HALF COPING UNIT

PennDOT DWG. NO. 95-144R PE

DES: RSM	DWG: SOD	CHKD:

DEC. 20, 2011

Product:

Item 8530-xxxx Metal Box Culvert
Aluminum Structural Plate Box Culvert
Lane Enterprises, Inc.
PennDOT Drawing # 2012-110 PE

Approval Date:
September 25, 2012

Initiated By SOL:
431-12-09

Application/Use:

Aluminum Structural Plate Box Culvert manufactured by Lane Enterprises, Inc. of Camp Hill, PA has been approved for use as an "**As-designed**" or "**Alternate**" metal plate box culvert. The use as an "As-designed" or "Alternate" metal plate box culvert is at the discretion of the District Executive.

Aluminum Structural Plate Box Culvert usage has the following restrictions:

- Maximum Span is 25'-5".
- Structural plate box culverts may be used for all highways, regardless of ADT.
- All highways with ADTT $\leq$ 500.
- Chief Bridge Engineer approval is required for corrugated metal buried structures exceeding these limitations.

This culvert meets both AASHTO and Design Manual, Part 4 design criteria.

Specifications:

Design/Material/Construction Specifications for this culvert system are specified on PennDOT Drawing #2012-110 PE dated 9/25/12 of Aluminum Structural Plate Box Culvert details for your use.

Comments:

On those projects permitting the use of this system as an alternate, the Alternate Culvert Special Provision should indicate that the "Aluminum Structural Plate Box Culvert" as an alternate is allowed.

The contractor will be required to revise the pertinent contract drawings as per DM-4, PP 1.10 to show the usage of "Aluminum Structural Plate Box Culvert" and will also be required to reimburse the Department a fee per design for the review and approval of the revision. The fee shall be as specified in the contract's Special Provisions.

STANDARD PLATE DETAIL

(PLATE & APPURTENANCES IN ACCORDANCE WITH AASHTO M219)

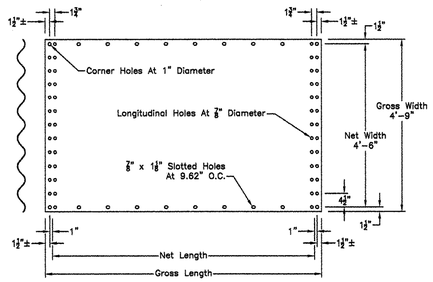

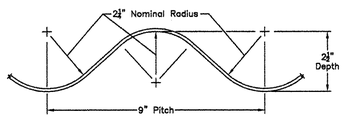

Standard Sizes and Weights										
Length	Net Length	Gross Length	Weight Per Plate							
*N	in.	in.	0.100	0.125	0.125	0.150	0.175	0.200	0.225	0.250
8N	76.96	81.71	52.7	65.9	65.9	79.1	92.2	104.7	117.8	130.9
9N	86.58	91.33	58.9	73.6	73.6	88.4	103.1	117.8	132.6	147.3
10N	96.20	100.95	65.1	81.4	81.4	97.7	114.0	130.2	146.5	162.8
11N	105.82	110.57	71.3	89.2	89.2	107.0	124.8	142.6	160.5	178.3
12N	115.44	120.19	77.5	96.9	96.9	116.3	135.7	155.1	174.4	193.8
13N	125.06	129.81	83.7	104.7	104.7	125.6	146.5	167.5	188.4	209.3
14N	134.68	139.43	89.9	112.4	112.4	134.9	157.4	179.9	202.4	224.8
15N	144.30	149.05	96.1	120.2	120.2	144.2	168.3	192.3	216.3	240.4
16N	153.92	158.67	102.4	127.9	127.9	153.5	179.1	204.7	230.3	257.8
17N	163.54	168.29	180.6	135.7	135.7	162.8	190.0	217.1	244.2	271.4
18N	173.16	177.91	114.8	143.5	143.5	172.1	200.8	229.5	258.2	286.9

Notes:
(1) Weights based on nominal thickness.
(2) Bolt holes have not been deducted.
(3) *N = 9.62"

BOLT DETAIL

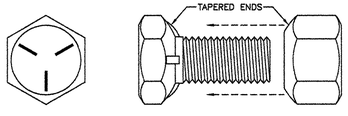

Bolts and nuts required to join corrugated plates together, or to join corrugated plates to the stiffeners or other structural member, shall conform to the standards listed in ASTM B 746 for hot-dip galvanized steel bolts and nuts. All bolts shall be tightened using an applied torque between 100 and 150 ft-lbs. Bolts and nuts shall be in accordance with the following guide:

¾" x 1¼" Bolts two-plate lap for shell
⅜" x 1½" Bolts rib to shell, three-plate laps and rib splices
¾" x 1¾" Bolts rib crossing seams

TRANSVERSE RIB STIFFENERS

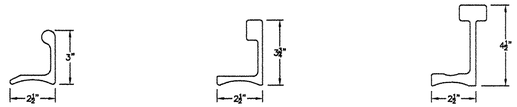

Type II Rib (ASTM TYPE 1)
6061-T6 Alloy
Tensile Strength F_u = 38 ksi
Yield Strength F_y = 35 ksi
X-Sectional Area A = 1.75 in²
Moment of Inertia I = 1.75 in⁴

Type IV Rib (ASTM TYPE 2)
6061-T6 Alloy
Tensile Strength F_u = 38 ksi
Yield Strength F_y = 35 ksi
X-Sectional Area A = 2.37 in²
Moment of Inertia I = 3.81 in⁴

Type VI Rib
6061-T6 Alloy
Tensile Strength F_u = 38 ksi
Yield Strength F_y = 35 ksi
X-Sectional Area A = 3.58 in²
Moment of Inertia I = 9.73 in⁴

PLASTIC MOMENT CAPACITIES FOR PLATE-RIB COMBINATIONS

Plate Thickness (in)	Plate/Rib Combination	M_p (k-ft/ft)
0.125	No Rib	2.65
0.150	No Rib	3.18
0.175	No Rib	3.71
0.200	No Rib	4.24
0.225	No Rib	4.77
0.250	No Rib	5.30
0.125	Type II @ 54"	4.62
0.150	Type II @ 54"	5.46
0.175	Type II @ 54"	6.04
0.200	Type II @ 54"	6.61
0.225	Type II @ 54"	7.17
0.250	Type II @ 54"	7.74
0.125	Type II @ 27"	6.18
0.150	Type II @ 27"	7.25
0.175	Type II @ 27"	7.94
0.200	Type II @ 27"	8.60
0.225	Type II @ 27"	9.25
0.250	Type II @ 27"	9.87
0.125	Type II @ 18"	7.41
0.150	Type II @ 18"	8.66
0.175	Type II @ 18"	9.48
0.200	Type II @ 18"	10.26
0.225	Type II @ 18"	11.00
0.250	Type II @ 18"	11.71
0.125	Type II @ 9"	10.63
0.150	Type II @ 9"	12.13
0.175	Type II @ 9"	13.08
0.200	Type II @ 9"	14.05
0.225	Type II @ 9"	15.03
0.250	Type II @ 9"	16.02
0.125	Type IV @ 54"	5.87
0.150	Type IV @ 54"	6.82
0.175	Type IV @ 54"	7.43
0.200	Type IV @ 54"	8.04
0.225	Type IV @ 54"	8.63
0.250	Type IV @ 54"	9.21

Plate Thickness (in)	Plate/Rib Combination	M_p (k-ft/ft)
0.125	Type IV @ 27"	8.32
0.150	Type IV @ 27"	9.59
0.175	Type IV @ 27"	10.39
0.200	Type IV @ 27"	11.14
0.225	Type IV @ 27"	11.85
0.250	Type IV @ 27"	12.55
0.125	Type IV @ 18"	10.42
0.150	Type IV @ 18"	11.90
0.175	Type IV @ 18"	12.84
0.200	Type IV @ 18"	13.72
0.225	Type IV @ 18"	14.57
0.250	Type IV @ 18"	15.39
0.125	Type IV @ 9"	16.45
0.150	Type IV @ 9"	18.46
0.175	Type IV @ 9"	19.41
0.200	Type IV @ 9"	20.38
0.225	Type IV @ 9"	21.37
0.250	Type IV @ 9"	22.37
0.125	Type VI @ 54"	8.74
0.150	Type VI @ 54"	9.51
0.175	Type VI @ 54"	10.24
0.200	Type VI @ 54"	10.95
0.225	Type VI @ 54"	11.64
0.250	Type VI @ 54"	12.32
0.125	Type VI @ 27"	13.76
0.150	Type VI @ 27"	14.33
0.175	Type VI @ 27"	15.16
0.200	Type VI @ 27"	16.19
0.225	Type VI @ 27"	17.36
0.250	Type VI @ 27"	17.48
0.125	Type VI @ 18"	20.09
0.150	Type VI @ 18"	20.56
0.175	Type VI @ 18"	20.79
0.200	Type VI @ 18"	21.30
0.225	Type VI @ 18"	21.74
0.250	Type VI @ 18"	22.58
0.125	Type VI @ 9"	32.24
0.150	Type VI @ 9"	34.35
0.175	Type VI @ 9"	36.46
0.200	Type VI @ 9"	38.54
0.225	Type VI @ 9"	39.88
0.250	Type VI @ 9"	40.63

PENNSYLVANIA
DEPARTMENT OF TRANSPORTATION
RECOMMENDED

Thomas P Macioce

CHIEF BRIDGE ENGINEER

BOX CULVERT CROSS SECTION

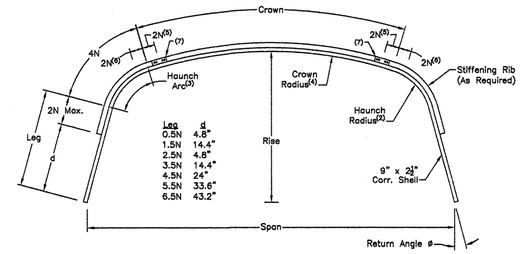

Structure No.	Span	Rise	Crown (N)	Leg (N)	ϕ°
1	8'-9"	2'-6"	5	0.5	15.40
2	9'-2"	3'-3"	5	1.5	15.40
3	9'-7"	4'-1"	5	2.5	15.40
4	10'-0"	4'-10"	5	3.5	15.40
5	10'-6"	5'-7"	5	4.5	15.40
6	10'-11"	6'-4"	5	5.5	15.40
7	11'-4"	7'-2"	5	6.5	15.40
8	10'-2"	2'-8"	7	0.5	13.55
9	10'-7"	3'-5"	7	1.5	13.55
10	10'-11"	4'-3"	7	2.5	13.55
11	11'-4"	5'-0"	7	3.5	13.55
12	11'-8"	5'-9"	7	4.5	13.55
13	12'-1"	6'-7"	7	5.5	13.55
14	12'-5"	7'-4"	7	6.5	13.55
15	11'-7"	2'-10"	9	0.5	11.70
16	11'-11"	3'-7"	9	1.5	11.70
17	12'-3"	4'-5"	9	2.5	11.70
18	12'-7"	5'-2"	9	3.5	11.70
19	12'-11"	6'-0"	9	4.5	11.70
20	13'-3"	6'-9"	9	5.5	11.70
21	13'-0"	3'-0"	11	0.5	9.87
22	13'-4"	3'-10"	11	1.5	9.87
23	13'-7"	4'-7"	11	2.5	9.87
24	13'-10"	5'-5"	11	3.5	9.87
25	14'-1"	6'-2"	11	4.5	9.87
26	14'-5"	3'-3"	13	0.5	8.02
27	14'-8"	4'-1"	13	1.5	8.02
28	14'-10"	4'-10"	13	2.5	8.02
29	15'-1"	5'-8"	13	3.5	8.02

Structure No.	Span	Rise	Crown (N)	Leg (N)	ϕ°
30	15'-4"	6'-5"	13	4.5	8.02
31	15'-6"	7'-3"	13	5.5	8.02
32	15'-9"	8'-0"	13	6.5	8.02
33	15'-10"	3'-6"	15	0.5	6.17
34	16'-0"	4'-3"	15	1.5	6.17
35	16'-2"	5'-1"	15	2.5	6.17
36	16'-4"	5'-11"	15	3.5	6.17
37	16'-6"	6'-8"	15	4.5	6.17
38	16'-8"	7'-6"	15	5.5	6.17
39	16'-10"	8'-3"	15	6.5	6.17
40	17'-9"	3'-10"	17	0.5	14.90
41	18'-2"	4'-7"	17	1.5	14.90
42	18'-7"	5'-4"	17	2.5	14.90
43	19'-0"	6'-1"	17	3.5	14.90
44	19'-5"	6'-11"	17	4.5	14.90
45	19'-10"	7'-8"	17	5.5	14.90
46	20'-3"	8'-5"	17	6.5	14.90
47	19'-1"	4'-2"	19	0.5	12.78
48	19'-5"	4'-11"	19	1.5	12.78
49	19'-9"	5'-8"	19	2.5	12.78
50	20'-1"	6'-6"	19	3.5	12.78
51	20'-6"	7'-3"	19	4.5	12.78
52	20'-10"	8'-1"	19	5.5	12.78
53	21'-2"	8'-10"	19	6.5	12.78
54	20'-4"	4'-6"	21	0.5	10.67
55	20'-7"	5'-3"	21	1.5	10.67
56	20'-11"	6'-1"	21	2.5	10.67
57	21'-3"	6'-10"	21	3.5	10.67
58	21'-6"	7'-8"	21	4.5	10.67

Structure No.	Span	Rise	Crown (N)	Leg (N)	ϕ°
59	21'-10"	8'-5"	21	5.5	10.67
60	22'-1"	9'-3"	21	6.5	10.67
61	21'-7"	4'-11"	23	0.5	8.53
62	21'-10"	5'-8"	23	1.5	8.53
63	22'-1"	6'-6"	23	2.5	8.53
64	22'-3"	7'-3"	23	3.5	8.53
65	22'-6"	8'-1"	23	4.5	8.53
66	22'-9"	8'-10"	23	5.5	8.53
67	23'-0"	9'-8"	23	6.5	8.53
68	22'-9"	5'-4"	25	0.5	6.42
69	23'-0"	6'-1"	25	1.5	6.42
70	23'-2"	6'-11"	25	2.5	6.42
71	23'-4"	7'-8"	25	3.5	6.42
72	23'-6"	8'-6"	25	4.5	6.42
73	23'-8"	9'-3"	25	5.5	6.42
74	23'-10"	10'-1"	25	6.5	6.42
75	24'-0"	5'-9"	27	0.5	4.30
76	24'-1"	6'-6"	27	1.5	4.30
77	24'-3"	7'-4"	27	2.5	4.30
78	24'-4"	8'-2"	27	3.5	4.30
79	24'-5"	8'-11"	27	4.5	4.30
80	24'-7"	9'-9"	27	5.5	4.30
81	24'-8"	10'-6"	27	6.5	4.30
82	25'-2"	6'-2"	29	0.5	2.18
83	25'-2"	7'-0"	29	1.5	2.18
84	25'-3"	7'-9"	29	2.5	2.18
85	25'-4"	8'-7"	29	3.5	2.18
86	25'-4"	9'-5"	29	4.5	2.18
87	25'-5"	10'-2"	29	5.5	2.18

Notes:
(1) N = 9.62" (Lateral bolt hole spacing)
(2) Haunch radius is 30⅞" for structures 1–39 and 37⅜" for structures 40–87.
(3) Haunch arc is 70° for structures 1–39 and 57° for structures 40–87.
(4) Shell crown radius is 297½" for structures 1–39 and 258¾" for structures 40–87.
(5) Haunch ribs, where required without a crown rib, shall extend onto the crown a distance of 2N.
(6) Crown Ribs, Where required without a haunch rib, shall extend onto the haunch a distance of 2N.
(7) Haunch and crown ribs, where required together, shall be spliced at a point on the crown a distance of 2N from the haunch arc.
(8) Rise shall not deviate from the specified dimensions by more than 1% of the span.

SPLICE RIB DETAILS

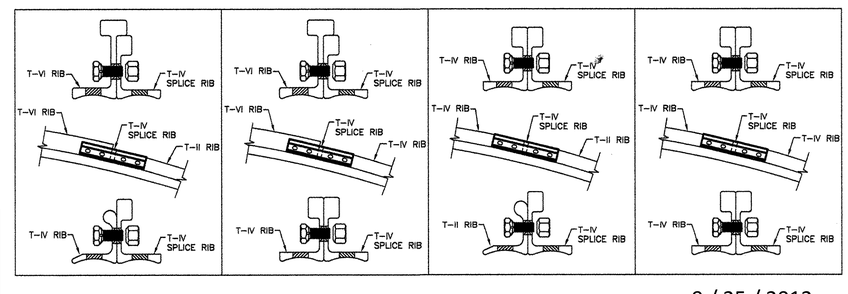

9 / 25 / 2012

LANE

ALUMINUM STRUCTURAL PLATE BOX CULVERTS

LANE ENTERPRISES, INC.

COMMONWEALTH OF PENNSYLVANIA
REGISTERED PROFESSIONAL
PATRICK XAVIER COLLINGS
ENGINEER
036549-E

SCALE:	DRAWN BY:	DATE:	DRAWING NUMBER:
NTS	JDS	7/27/12	2012-110 PE

PAGE: 1 of 3

ALUMINUM STRUCTURAL PLATE BOX CULVERT HEIGHTS OF COVER

Soil Density = 140 pcf

Cover Heights based on AASHTO LRFD Bridge Design Specifications (5th Edition) as modified by applicable requirements contained in the current PennDOT Design Manual Part 4.

H = height of cover from box culvert rise to top of pavement
t = corrugated plate thickness for Haunch or Crown

R = rib (transverse stiffeners)
RS= rib spacing for haunch or crown

	Box Culvert	t_H (in)	t_C (in)	R_H	R_C	RS_H (in)	RS_C (in)	H_{min} (ft)	H_{max} (ft)
1a	8'-9" x 2'-6"	0.125	0.125	Type II	Type IV	54	18	1.6	5.0
1b		0.150	0.150	Type II	Type IV	54	18	1.4	5.0
2a	9'-2" x 3'-3"	0.125	0.125	Type II	Type IV	54	18	1.8	5.0
2b		0.150	0.150	Type II	Type IV	54	18	1.4	5.0
3a	9'-7" x 4'-1"	0.125	0.125	Type II	Type IV	54	18	2.0	5.0
3b		0.150	0.150	Type II	Type IV	54	18	1.5	5.0
4a	10'-0" x 4'-10"	0.125	0.125	Type II	Type IV	54	18	2.3	5.0
4b		0.125	0.125	Type II	Type IV	54	9	1.4	5.0
5a	10'-6" x 5'-7"	0.125	0.125	Type II	Type IV	54	18	2.5	5.0
5b		0.125	0.125	Type II	Type IV	54	9	1.4	5.0
6a	10'-11" x 6'-4"	0.125	0.125	Type II	Type IV	54	18	2.8	5.0
6b		0.125	0.125	Type II	Type IV	54	9	1.9	5.0
6c		0.150	0.150	Type II	Type IV	54	9	1.4	5.0
7a	11'-4" x 7'-2"	0.125	0.125	Type II	Type IV	54	18	3.0	5.0
7b		0.125	0.125	Type II	Type IV	27	18	2.5	5.0
7c		0.150	0.150	Type II	Type IV	54	9	1.4	5.0
8a	10'-2" x 2'-8"	0.125	0.125	Type II	Type IV	54	18	2.4	5.0
8b		0.150	0.150	Type II	Type IV	54	18	1.8	5.0
8c		0.175	0.175	Type II	Type IV	54	18	1.4	5.0
9a	10'-7" x 3'-5"	0.125	0.125	Type II	Type IV	54	18	2.6	5.0
9b		0.150	0.150	Type II	Type IV	54	18	2.0	5.0
9c		0.150	0.150	Type II	Type IV	27	18	1.5	5.0
10a	10'-11" x 4'-3"	0.125	0.125	Type II	Type IV	54	18	2.8	5.0
10b		0.150	0.150	Type II	Type IV	54	18	2.2	5.0
10c		0.150	0.150	Type II	Type IV	54	9	1.4	5.0
11a	11'-4" x 5'-0"	0.125	0.125	Type II	Type IV	54	18	3.0	5.0
11b		0.150	0.150	Type II	Type IV	54	18	2.4	5.0
11c		0.150	0.150	Type II	Type IV	54	9	1.4	5.0
12a	11'-8" x 5'-9"	0.125	0.125	Type II	Type IV	54	18	3.3	5.0
12b		0.150	0.150	Type II	Type IV	54	18	2.6	5.0
12c		0.150	0.150	Type II	Type IV	54	9	1.4	5.0
13a	12'-1" x 6'-7"	0.150	0.150	Type II	Type IV	54	18	2.8	5.0
13b		0.150	0.150	Type II	Type IV	27	18	2.3	5.0
13c		0.150	0.150	Type II	Type IV	27	9	1.4	5.0
14a	12'-5" x 7'-4"	0.125	0.125	Type II	Type IV	27	18	3.2	5.0
14b		0.125	0.125	Type II	Type IV	27	9	1.8	5.0
14c		0.150	0.150	Type II	Type IV	27	9	1.4	5.0
15a	11'-7" x 2'-10"	0.125	0.125	Type II	Type IV	54	18	3.2	5.0
15b		0.150	0.150	Type II	Type IV	54	18	2.5	5.0
15c		0.150	0.150	Type II	Type IV	54	9	1.4	5.0
16a	11'-11" x 3'-7"	0.150	0.150	Type II	Type IV	54	18	2.7	5.0
16b		0.150	0.150	Type II	Type IV	27	18	2.2	5.0
16c		0.150	0.150	Type II	Type IV	54	9	1.5	5.0
17a	12'-3" x 4'-5"	0.150	0.150	Type II	Type IV	54	18	2.9	5.0
17b		0.175	0.175	Type II	Type IV	54	18	2.5	5.0
17c		0.175	0.175	Type II	Type IV	54	9	1.4	5.0
18a	12'-7" x 5'-2"	0.150	0.150	Type II	Type IV	54	18	3.1	5.0
18b		0.150	0.150	Type II	Type IV	27	18	2.5	5.0
18c		0.175	0.175	Type II	Type IV	54	9	1.5	5.0
19a	12'-11" x 6'-0"	0.150	0.150	Type II	Type IV	27	18	2.7	5.0
19b		0.125	0.125	Type II	Type IV	27	9	2.1	5.0
19c		0.175	0.175	Type II	Type IV	27	9	1.4	5.0
20a	13'-3" x 6'-9"	0.125	0.125	Type II	Type IV	18	18	3.5	5.0
20b		0.125	0.125	Type II	Type IV	27	9	2.2	5.0
20c		0.150	0.150	Type II	Type IV	18	9	1.4	5.0
21a	13'-0" x 3'-0"	0.150	0.150	Type II	Type VI	54	18	2.5	5.0
21b		0.125	0.125	Type II	Type VI	27	18	1.5	5.0
21c		0.150	0.150	Type II	Type VI	27	18	1.4	5.0

	Box Culvert	t_H (in)	t_C (in)	R_H	R_C	RS_H (in)	RS_C (in)	H_{min} (ft)	H_{max} (ft)
22a	13'-4" x 3'-10"	0.150	0.150	Type II	Type VI	54	18	2.8	5.0
22b		0.125	0.125	Type II	Type VI	27	18	1.8	5.0
22c		0.175	0.175	Type II	Type VI	27	18	1.4	5.0
23a	13'-7" x 4'-7"	0.150	0.150	Type II	Type VI	54	18	3.1	5.0
23b		0.125	0.125	Type II	Type VI	27	18	2.0	5.0
23c		0.150	0.150	Type II	Type VI	18	18	1.4	5.0
24a	13'-10" x 5'-5"	0.175	0.150	Type II	Type VI	54	18	2.4	5.0
24b		0.125	0.125	Type II	Type VI	27	18	2.2	5.0
24c		0.150	0.150	Type II	Type VI	18	18	1.4	5.0
25a	14'-1" x 6'-2"	0.125	0.125	Type II	Type VI	27	18	2.5	5.0
25b		0.125	0.125	Type II	Type VI	18	18	1.7	5.0
25c		0.150	0.150	Type II	Type VI	18	18	1.4	5.0
26a	14'-5" x 3'-3"	0.125	0.125	Type II	Type VI	27	18	2.8	5.0
26b		0.125	0.125	Type II	Type VI	18	18	1.9	5.0
26c		0.175	0.175	Type II	Type VI	18	18	1.4	5.0
27a	14'-8" x 4'-1"	0.125	0.125	Type II	Type VI	27	18	3.0	3.8
27b		0.125	0.125	Type II	Type VI	18	18	2.0	5.0
27c		0.175	0.200	Type II	Type VI	18	18	1.4	5.0
28a	14'-10" x 4'-10"	0.125	0.125	Type II	Type VI	18	18	2.1	5.0
28b		0.175	0.225	Type II	Type VI	18	18	1.4	5.0
29a	15'-1" x 5'-8"	0.125	0.125	Type II	Type VI	18	18	2.2	5.0
29b		0.175	0.250	Type II	Type VI	18	18	1.4	5.0
30a	15'-4" x 6'-5"	0.150	0.150	Type II	Type VI	27	18	2.2	5.0
30b		0.125	0.125	Type II	Type VI	18	18	2.3	5.0
30c		0.200	0.250	Type II	Type VI	18	18	1.5	5.0
31a	15'-6" x 7'-3"	0.150	0.150	Type II	Type VI	27	18	2.3	5.0
31b		0.125	0.125	Type II	Type VI	18	18	2.3	5.0
31c		0.200	0.250	Type II	Type VI	18	18	1.4	5.0
32a	15'-9" x 8'-0"	0.150	0.150	Type II	Type VI	27	18	2.5	5.0
32b		0.125	0.125	Type II	Type VI	18	18	2.4	5.0
32c		0.200	0.250	Type II	Type VI	18	18	1.6	5.0
33a	15'-10" x 3'-6"	0.125	0.125	Type II	Type VI	18	18	2.5	5.0
33b		0.225	0.125	Type II	Type VI	18	18	1.8	5.0
33c		0.250	0.200	Type II	Type VI	18	18	1.5	5.0
34a	16'-0" x 4'-3"	0.125	0.125	Type II	Type VI	18	18	2.6	5.0
34b		0.225	0.125	Type II	Type VI	18	18	1.9	5.0
34c		0.250	0.225	Type II	Type VI	18	18	1.5	5.0
35a	16'-2" x 5'-1"	0.125	0.125	Type II	Type VI	18	18	2.7	4.9
35b		0.225	0.125	Type II	Type VI	18	18	1.9	5.0
35c		0.250	0.250	Type II	Type VI	18	18	1.5	5.0
36a	16'-4" x 5'-11"	0.125	0.125	Type II	Type VI	18	18	2.8	4.1
36b		0.225	0.125	Type II	Type VI	18	18	2.0	5.0
36c		0.250	0.250	Type II	Type VI	18	18	1.5	5.0
37a	16'-6" x 6'-8"	0.125	0.125	Type II	Type VI	18	18	3.0	3.7
37b		0.225	0.125	Type II	Type VI	18	18	2.1	5.0
37c		0.175	0.200	Type II	Type VI	9	18	1.5	5.0
38a	16'-8" x 7'-6"	0.225	0.125	Type II	Type VI	18	18	2.2	5.0
38b		0.175	0.250	Type II	Type VI	9	18	1.4	5.0
39a	16'-10" x 8'-3"	0.225	0.125	Type II	Type VI	18	18	2.2	5.0
39b		0.175	0.250	Type II	Type VI	9	18	1.5	5.0
40a	17'-9" x 3'-10"	0.125	0.125	Type VI	Type VI	54	18	3.1	4.9
40b		0.125	0.125	Type VI	Type VI	27	18	2.1	5.0
40c		0.125	0.125	Type VI	Type VI	18	18	1.4	5.0
41a	18'-2" x 4'-7"	0.125	0.125	Type VI	Type VI	27	18	2.3	5.0
41b		0.125	0.125	Type VI	Type VI	18	18	1.5	5.0
41c		0.125	0.150	Type VI	Type VI	18	18	1.5	5.0

	Box Culvert	t_H (in)	t_C (in)	R_H	R_C	RS_H (in)	RS_C (in)	H_{min} (ft)	H_{max} (ft)
42a	18'-7" x 5'-4"	0.125	0.125	Type VI	Type VI	27	18	2.5	5.0
42b		0.125	0.125	Type VI	Type VI	18	18	1.7	5.0
42c		0.125	0.200	Type VI	Type VI	18	18	1.4	5.0
43a	19'-0" x 6'-1"	0.125	0.125	Type VI	Type VI	27	18	2.6	5.0
43b		0.125	0.125	Type VI	Type VI	18	18	1.8	5.0
43c		0.125	0.225	Type VI	Type VI	18	18	1.5	5.0
44a	19'-5" x 6'-11"	0.125	0.125	Type VI	Type VI	27	18	2.8	5.0
44b		0.125	0.125	Type VI	Type VI	18	18	1.9	5.0
44c		0.125	0.250	Type VI	Type VI	18	18	1.4	5.0
45a	19'-10" x 7'-8"	0.125	0.125	Type VI	Type VI	27	18	3.1	4.4
45b		0.125	0.125	Type VI	Type VI	18	18	2.0	5.0
45c		0.125	0.250	Type VI	Type VI	18	18	1.5	5.0
46a	20'-3" x 8'-5"	0.125	0.125	Type VI	Type VI	18	18	2.1	5.0
46b		0.125	0.125	Type VI	Type VI	18	9	1.4	5.0
47a	19'-1" x 4'-2"	0.125	0.125	Type VI	Type VI	27	18	2.7	5.0
47b		0.125	0.125	Type VI	Type VI	18	18	1.8	5.0
47c		0.125	0.125	Type VI	Type VI	18	9	1.4	5.0
48a	19'-8" x 4'-11"	0.125	0.125	Type VI	Type VI	27	18	2.8	5.0
48b		0.125	0.125	Type VI	Type VI	18	18	1.9	5.0
48c		0.125	0.125	Type VI	Type VI	18	9	1.4	5.0
49a	19'-9" x 5'-8"	0.125	0.125	Type VI	Type VI	27	18	3.0	4.5
49b		0.125	0.125	Type VI	Type VI	18	18	1.9	5.0
49c		0.125	0.125	Type VI	Type VI	18	9	1.4	5.0
50a	20'-1" x 6'-6"	0.125	0.125	Type VI	Type VI	27	18	3.3	3.8
50b		0.125	0.125	Type VI	Type VI	18	18	2.0	5.0
50c		0.125	0.125	Type VI	Type VI	18	9	1.4	5.0
51a	20'-6" x 7'-3"	0.125	0.125	Type VI	Type VI	18	18	2.1	5.0
51b		0.125	0.125	Type VI	Type VI	18	9	1.4	5.0
52a	20'-10" x 8'-1"	0.125	0.125	Type VI	Type VI	18	18	2.2	5.0
52b		0.125	0.125	Type VI	Type VI	18	9	1.4	5.0
53a	21'-2" x 8'-10"	0.125	0.125	Type VI	Type VI	18	18	2.2	5.0
53b		0.125	0.250	Type VI	Type VI	18	18	1.9	5.0
53c		0.125	0.125	Type VI	Type VI	18	9	1.4	5.0
54a	20'-4" x 4'-6"	0.125	0.125	Type VI	Type VI	18	18	2.1	5.0
54b		0.125	0.125	Type VI	Type VI	18	9	1.4	5.0
55a	20'-7" x 5'-3"	0.125	0.125	Type VI	Type VI	18	18	2.1	5.0
55b		0.125	0.125	Type VI	Type VI	18	9	1.4	5.0
56a	20'-11" x 6'-1"	0.125	0.125	Type VI	Type VI	18	18	2.2	5.0
56b		0.125	0.125	Type VI	Type VI	18	9	1.4	5.0
57a	21'-3" x 6'-10"	0.125	0.125	Type VI	Type VI	18	18	2.3	5.0
57b		0.125	0.250	Type VI	Type VI	18	18	1.9	5.0
57c		0.125	0.125	Type VI	Type VI	18	9	1.4	5.0
58a	21'-6" x 7'-8"	0.125	0.125	Type VI	Type VI	18	18	2.4	5.0
58b		0.125	0.250	Type VI	Type VI	18	18	2.0	5.0
58c		0.125	0.125	Type VI	Type VI	18	9	1.4	5.0
59a	21'-10" x 8'-5"	0.125	0.125	Type VI	Type VI	18	18	2.5	5.0
59b		0.125	0.250	Type VI	Type VI	18	18	2.1	5.0
59c		0.125	0.125	Type VI	Type VI	18	9	1.4	5.0
60a	22'-1" x 9'-3"	0.125	0.125	Type VI	Type VI	18	18	2.5	4.8
60b		0.125	0.250	Type VI	Type VI	18	18	2.1	5.0
60c		0.125	0.125	Type VI	Type VI	18	9	1.4	5.0
61a	21'-7" x 4'-11"	0.125	0.125	Type VI	Type VI	18	18	2.4	5.0
61b		0.125	0.250	Type VI	Type VI	18	18	2.0	5.0
61c		0.125	0.125	Type VI	Type VI	18	9	1.4	5.0
62a	21'-10" x 5'-8"	0.125	0.125	Type VI	Type VI	18	18	2.5	5.0
62b		0.125	0.250	Type VI	Type VI	18	18	2.1	5.0
62c		0.125	0.125	Type VI	Type VI	18	9	1.4	5.0

	Box Culvert	t_H (in)	t_C (in)	R_H	R_C	RS_H (in)	RS_C (in)	H_{min} (ft)	H_{max} (ft)
63a	22'-1" x 6'-6"	0.125	0.125	Type VI	Type VI	18	18	2.5	4.6
63b		0.125	0.250	Type VI	Type VI	18	18	2.1	5.0
63c		0.125	0.125	Type VI	Type VI	18	9	1.4	5.0
64a	22'-3" x 7'-3"	0.125	0.125	Type VI	Type VI	18	18	2.6	4.7
64b		0.125	0.250	Type VI	Type VI	18	18	2.2	5.0
64c		0.125	0.125	Type VI	Type VI	18	9	1.4	5.0
65a	22'-6" x 8'-1"	0.125	0.125	Type VI	Type VI	18	18	2.7	4.4
65b		0.125	0.250	Type VI	Type VI	18	18	2.2	5.0
65c		0.125	0.125	Type VI	Type VI	18	9	1.4	5.0
66a	22'-9" x 8'-10"	0.125	0.125	Type VI	Type VI	18	18	2.8	4.2
66b		0.125	0.250	Type VI	Type VI	18	18	2.3	5.0
66c		0.125	0.125	Type VI	Type VI	18	9	1.4	5.0
67a	23'-0" x 9'-8"	0.125	0.125	Type VI	Type VI	18	18	2.9	3.9
67b		0.125	0.250	Type VI	Type VI	18	18	2.4	4.9
67c		0.125	0.125	Type VI	Type VI	18	9	1.4	5.0
68a	22'-9" x 5'-4"	0.125	0.125	Type VI	Type VI	18	18	2.8	4.2
68b		0.125	0.250	Type VI	Type VI	18	18	2.3	5.0
68c		0.125	0.125	Type VI	Type VI	18	9	1.4	5.0
69a	23'-0" x 6'-1"	0.125	0.125	Type VI	Type VI	18	18	2.9	3.9
69b		0.125	0.250	Type VI	Type VI	18	18	2.4	4.9
69c		0.125	0.125	Type VI	Type VI	18	9	1.4	5.0
70a	23'-2" x 6'-11"	0.125	0.125	Type VI	Type VI	18	18	2.9	3.8
70b		0.125	0.250	Type VI	Type VI	18	18	2.4	4.6
70c		0.125	0.125	Type VI	Type VI	18	9	1.4	5.0
71a	23'-4" x 7'-8"	0.125	0.125	Type VI	Type VI	18	18	3.0	3.7
71b		0.125	0.250	Type VI	Type VI	18	18	2.5	4.6
71c		0.125	0.125	Type VI	Type VI	18	9	1.4	5.0
72a	23'-6" x 8'-6"	0.125	0.250	Type VI	Type VI	18	18	2.5	4.5
72b		0.125	0.125	Type VI	Type VI	18	9	1.4	5.0
73a	23'-8" x 9'-3"	0.125	0.250	Type VI	Type VI	18	18	2.6	4.4
73b		0.125	0.125	Type VI	Type VI	18	9	1.4	5.0
74a	23'-10" x 10'-1"	0.125	0.250	Type VI	Type VI	18	18	2.6	4.2
74b		0.125	0.125	Type VI	Type VI	18	9	1.4	5.0
75a	24'-0" x 5'-9"	0.125	0.250	Type VI	Type VI	18	18	2.7	4.1
75b		0.125	0.125	Type VI	Type VI	18	9	1.4	5.0
76a	24'-1" x 6'-6"	0.125	0.250	Type VI	Type VI	18	18	2.7	4.0
76b		0.125	0.125	Type VI	Type VI	18	9	1.4	5.0
77a	24'-3" x 7'-4"	0.125	0.250	Type VI	Type VI	18	18	2.8	3.9
77b		0.125	0.125	Type VI	Type VI	18	9	1.4	5.0
78a	24'-4" x 8'-2"	0.125	0.250	Type VI	Type VI	18	18	2.8	3.8
78b		0.125	0.125	Type VI	Type VI	18	9	1.4	5.0
79a	24'-5" x 8'-11"	0.125	0.250	Type VI	Type VI	18	18	2.8	3.8
79b		0.125	0.125	Type VI	Type VI	18	9	1.4	5.0
80a	24'-7" x 9'-9"	0.125	0.250	Type VI	Type VI	18	18	2.9	3.7
80b		0.125	0.125	Type VI	Type VI	18	9	1.4	5.0
81a	24'-8" x 10'-6"	0.125	0.250	Type VI	Type VI	18	18	2.9	3.7
81b		0.125	0.125	Type VI	Type VI	18	9	1.4	5.0
82a	25'-2" x 6'-2"	0.125	0.125	Type VI	Type VI	18	9	1.4	5.0
83a	25'-2" x 7'-0"	0.125	0.125	Type VI	Type VI	18	9	1.4	5.0
84a	25'-3" x 7'-9"	0.125	0.125	Type VI	Type VI	18	9	1.4	5.0
85a	25'-4" x 8'-7"	0.125	0.125	Type VI	Type VI	18	9	1.4	5.0
86a	25'-4" x 9'-5"	0.125	0.125	Type VI	Type VI	18	9	1.4	5.0
87a	25'-5" x 10'-2"	0.125	0.125	Type VI	Type VI	18	9	1.4	5.0

9 / 25 / 2012

LANE

ALUMINUM STRUCTURAL PLATE BOX CULVERTS

LANE ENTERPRISES, INC.

COMMONWEALTH OF PENNSYLVANIA
REGISTERED PROFESSIONAL
PATRICK XAVIER COLLINGS
ENGINEER
C065469-E

SCALE: NTS
DRAWN BY: JDS
DATE: 7/27/12
DRAWING NUMBER: 2012-110 PE

A. GENERAL

1. This specification covers the manufacture and installation of aluminum structural plate box culverts, consisting of aluminum structural plate, stiffening ribs, and appurtenances. Material and geometric requirements shall conform to AASHTO M219 and ASTM B864. Geometric requirements shall also conform to Figure 12.9.4.1–1 and Table 12.9.4.1–1 of the AASHTO LRFD Bridge Design Specifications. Box culvert dimensions, plate thicknesses, rib type and spacing, end treatment, and foundation (full invert or footings) shall be as indicated on project plans. Bolts and nuts shall conform to the requirements of ASTM A307 or ASTM A449 and shall be galvanized in accordance with ASTM A153.
2. Cover heights shown are based on AASHTO LRFD Bridge Design Specifications (5th Edition) as modified by applicable requirements contained in PennDOT Design Manual Part 4.
3. Lane takes full responsibility for engineering theory, calculation correctness, and ensuring that all design assumptions are validated in the contract document either by needed details or construction specifications.
4. Footing reactions depend on the actual cover height and shall be calculated in accordance with Section 12.9 of the AASHTO LRFD Bridge Design Specifications and/or PennDOT Design Manual Part 4.
5. Standard design is for square end structures. Culvert ends requiring bevels or skews may require additional features to be incorporated into the shop drawings by the manufacturer.
6. Secure District Bridge Engineer's approval before incorporating aluminum structural plate box culverts into any project.
7. Contractor is to verify that all information shown on the drawings has been thoroughly checked.

B. MATERIALS

1. Materials shall conform to the following standards:

Bolts, Nuts	ASTM A307 or A449
Hot Dip Galvanized Coatings (Steel Hardware)	ASTM A153
Anchor Bolts	ASTM F1554
Anchor Bolts Nuts	ASTM A563
Aluminum Sheet	ASTM B209
Aluminum Structural Plate (ASP)	ASTM B746, AASHTO M219
ASP Box Culvert (Geometry, Rib Stiffeners)	ASTM B864
ASP Box Culvert Geometric Limits	AASHTO LRFD BDS 12.9.4.1–1
Concrete ($f'c \geq 4000$ psi)	PennDOT Publication 408, Section 704
Reinforcing Steel (Rebar Grade 60)	ASTM A615

2. Structural backfill shall conform to the requirements of Standard Drawings RC–12M and RC–30M and Publication 408.
3. Provide materials and workmanship in accordance with PA DOT Publication 408, and supplements thereof, and/or special provisions as indicated or specified herein (Section 603 of Publication 408 applies to metal plate culverts).
4. Manufactured in accordance with the approved Quality Assurance Plan.
5. Certify in accordance with Publication 408, Section 106.03(b)3.

C. DESIGN

1. Designed per AASHTO LRFD and PennDOT DM4.
2. Secure District Bridge and Geotechnical (Soils) Engineer's approval before incorporating aluminum structural plate box culverts into any project.
3. Provide at no expense to the Department four sets of 22" x 36" assembly drawings that identify placement of the individual plates, rib schedule, bolting locations, bolt lengths for the varied connections, and any related appurtenances.
4. Rib and plate combinations for the various shell configurations not shown in the cover height tables require computational support consistent with the development of said table, signed and sealed by a professional engineer licensed in the State of Pennsylvania.
5. As applicable, provide a suitable footing design for the application, complete with engineering calculations signed and sealed by a professional engineer licensed in the State of Pennsylvania. The design shall incorporate soil bearing capacities assigned by the District, noted on contract documents, or otherwise determined by investigation.
6. Place footings below scour and frost depths. Use PennDOT criteria in determining scour depth. Place bottom of footing at a minimum depth equal to the prevailing frost depth or scour depth but not less than three feet below ground elevation unless constructed on rock foundation or otherwise indicated. If non–yielding material is found above the scour depth, the height of non–yielding material shall govern.
7. Concrete cutoff walls or scour curtains shall extend to a minimum depth of 3'–6" below all inlets and outlets and footings placed over erodible deposits in accordance with Standard Drawing BD–631M. Concrete cutoff walls are required when using the full invert option.
8. Assembly drawings and footing design shall be incorporated into construction plans that meet PennDOT drawing requirements. The first sheet of the drawings shall be signed and sealed by a professional engineer licensed in the State of Pennsylvania with the accompanying statement above the seal: "I certify that all design assumptions have been validated either through construction details, notes on the drawings, or through contract plans and provisions."
9. The following order of precedence governs any real or apparent conflict between design parameters, stresses or specifications:

   a. Design requirements listed in "Special drawings and special design requirements" of the special provisions
   b. Pennsylvania Department of Transportation Design Manual Part 4 (current)
   c. Pennsylvania Department of Transportation Standard Drawings
   d. AASHTO LRFD Bridge Design Specifications (current with PennDOT)

   The Chief Bridge Engineer shall arbitrate in the event a clear order of precedence cannot be established or a difference in interpretation of the design cannot be resolved.
10. Do not change the bottom of the footing elevation unless appropriately authorized by the District Bridge Engineer/District Geotechnical (Soils) Engineer.
11. The type and extent of end treatment on the box culvert should be chosen and designed so as to prevent the loss of backfill due to high flow conditions.
12. Headwall construction shall be for vertical orientation only. Any design, other than vertical orientation, must be reviewed by the manufacturer and/or design engineer.

D. Structure Assembly

1. The box culvert shall be assembled in accordance with the shop drawings provided by the manufacturer and per the manufacturer's recommendations.
2. Plate laps must be properly mated in a tangent fashion using proper alignment techniques and adequate bolt torque to seat the corrugation. The recommended installation bolt torque for aluminum box culverts is 90–115 ft–lbs for invert plates and 100–150 ft–lbs for all other components.

E. Construction

1. The work consists of furnishing, erecting and backfilling an aluminum structural plate box culvert on concrete footings, or a corrugated invert plate. The work includes excavation of on–site soils, proper trench construction, and structure placement to the lines, grades and locations shown on approved project drawings.
2. The box culvert shall be installed in accordance with the plans and specifications, the manufacturer's recommendations and Section 26 of the AASHTO LRFD Bridge Construction Specifications. The contractor shall take special note that aluminum structural plate box culverts are flexible by nature and therefore derive structural stability from the strength and relative stiffness of the surrounding backfill material. It is the resulting soil–culvert interaction system that defines the ability of the flexible box culvert to withstand the defined service loads.
3. Structural backfill shall conform to the requirements of Standard Drawings RC–12M and RC–30M and Publication 408. Backfill must be placed symmetrically on each side of the structure in 6 to 8–in lifts. Each lift shall be compacted to a minimum of 90% modified density per AASHTO T180.
4. If less than 3–ft of space is available on either side of the box culvert, concrete grout or a flowable fill may be required to ensure compaction against undisturbed soil.
5. The equivalent of a Caterpillar D4 bulldozer or smaller to operate near and above the structure during backfilling to finish grade.
6. Minimum cover may need to be increased for construction vehicle loads larger than a Caterpillar D4 bulldozer, but shall not exceed the maximum allowable cover for the box culvert design.
7. When using a full invert, the foundation shall have a minimum of 4,000 psf bearing capacity and include 6–in stable, well–graded granular bedding (lower bearing capacities can be accommodated through special design or the use of concrete footings).

ALUMINUM FULL INVERT OPTION

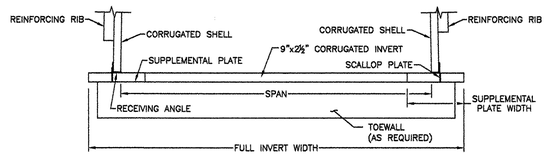

1. Full invert plate thickness shall be calculated based on required service life and site conditions in accordance with the methods detailed in PennDOT DM–4 (D12.6.9)
2. Subject to PennDOT approval, concrete paved inverts may be used to meet service life requirements when designed consistent with PennDOT Standards for Bridge Construction (Pub 218M, BD 635M).
3. When reactions to the invert require additional thickness, supplemental plates of calculated thickness and width are furnished to bolt between the invert plate and receiving angle.

Structure No.	Full Invert Width (N)	Structure No.	Full Invert Width (N)	Structure No.	Full Invert Width (N)
1	13	30	22	59	31
2	14	31	22	60	31
3	14	32	22	61	30
4	15	33	22	62	31
5	16	34	22	63	31
6	16	35	23	64	31
7	17	36	23	65	32
8	15	37	23	66	32
9	16	38	23	67	32
10	16	39	24	68	32
11	17	40	26	69	32
12	17	41	26	70	32
13	18	42	27	71	33
14	18	43	27	72	33
15	17	44	28	73	33
16	17	45	28	74	33
17	18	46	29	75	33
18	18	47	27	76	34
19	19	48	28	77	34
20	19	49	28	78	34
21	19	50	29	79	34
22	19	51	29	80	34
23	19	52	29	81	34
24	20	53	30	82	35
25	20	54	29	83	35
26	20	55	29	84	35
27	21	56	30	85	36
28	21	57	30	86	36
29	21	58	30	87	36

SCALLOP PLATE ENCLOSURE

(FULL INVERT ONLY)

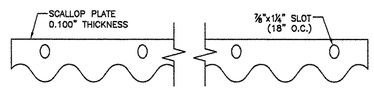

3004-H34 ALUMINUM

CONCRETE FOOTING OPTIONS

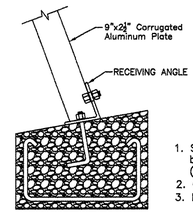

1. Size and reinforcing of footing to be controlled by soil–bearing capacity and loading conditions. (Designed by others)
2. Concrete strength $f'_c \geq 4000$psi
3. Reinforcing steel: ASTM A615 (rebar) grade 60.

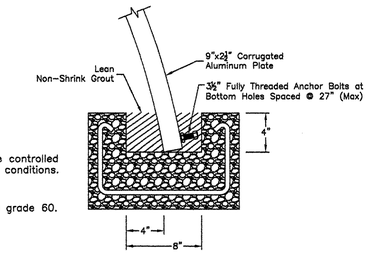

ANCHOR AND HOOK BOLTS

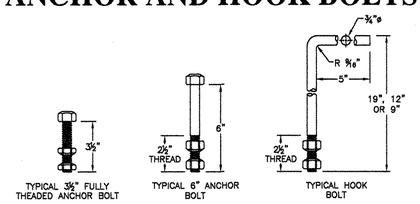

1. Typical 6" anchor and hook bolts as required for anchoring the box culvert ends into concrete headwalls or other end treatments.
2. Typical 3½" anchor bolts for anchoring plate edges in grouted concrete keyways (See above concrete footing detail).
3. Anchor bolts shall conform to ASTM F1554 (Grade 55). Nuts shall conform to A563 and shall be consistent with recommendations listed in ASTM F1554. Anchor bolts and nuts shall be hot dip galvanized in accordance with ASTM F1554.

RECEIVING ANGLES

(GALVANIZED STEEL PER ASTM A153)

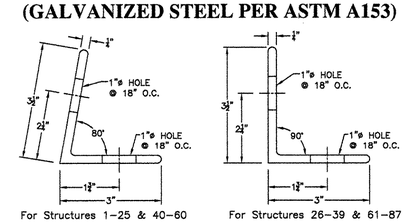

For Structures 1–25 & 40–60 For Structures 26–39 & 61–87

9 / 25 / 2012

LANE

ALUMINUM STRUCTURAL PLATE BOX CULVERTS

LANE ENTERPRISES, INC.

COMMONWEALTH OF PENNSYLVANIA REGISTERED PROFESSIONAL PATRICK XAVIER COLLINGS ENGINEER 036548-E

SCALE: NTS

DRAWN BY: JDS

DATE: 7/27/12

DRAWING NUMBER: 2012–110 PE

PAGE: 3 of 3

Product:

Item 9086-0408 – SENTRY-CAST
Sound Barrier Wall System
FABCON Companies
PennDOT Drawing # 2011-275 PE

Approval Date:	**Initiated By SOL:**
October 5, 2012	431-12-10

Application/Use:

SENTRY-CAST Sound Barrier Wall System post and panel wall system manufactured by FABCON Companies has been approved for use as an "**Alternate"** or "**As-designed"** sound barrier. The use as an "Alternate" or "As-designed" sound barrier is at the discretion of the District Executive.

SENTRY-CAST Sound Barrier Wall System is limited to the following applications installations:

- Maximum panel width length: 12 feet
- Maximum wall height: 24 feet
- Ground Mounted

This sound barrier wall system meets both AASHTO and Design Manual, Part 4 design criteria.

Specifications:

Design/Material/Construction Specifications for this post and panel sound barrier wall system are specified on PennDOT Drawing # 2011-275 PE, dated October 5, 2012. In addition, see applicable sections of Publication 408, Section 1086 – SOUND BARRIERS.

Standard Drawing:

Attached is a copy of the Standard Detail Drawing #2011-275 PE, dated October 5, 2012, of SENTRY-CAST Sound Barrier Wall System details for your use.

Comments:

On those projects permitting the use of this system as an alternate, a special provision should be included in the proposal to indicate that the "SENTRY-CAST Sound Barrier Wall System" as an alternate is allowed. The contractor will be required to revise the pertinent contract drawings as per DM-4M, PP 1.10 to show the usage of "SENTRY-CAST Sound Barrier Wall System" and will also be required to reimburse the Department a fee of $1000 per design for the review and approval of the revision. This should be specified in the contract's Special Provisions.

GENERAL NOTES

1. ALL DIMENSIONS ARE IN U.S. CUSTOMARY UNITS
2. CHAMFER EXPOSED CONCRETE EDGE 3/4" x 3/4", EXCEPT AS NOTED OTHERWISE.
3. DESIGN SPECIFICATIONS:
   - PENNDOT DESIGN MANUAL PART 4, STRUCTURES.
   - 1989 AASHTO "GUIDE SPECIFICATIONS FOR STRUCTURAL DESIGN OF SOUND BARRIERS", INCLUDING THE 1992 AND 2002 INTERIMS.
   - 1992 AASHTO "STANDARD SPECIFICATIONS FOR HIGHWAY BRIDGES", 15TH EDITION, INCLUDING THE 1993 AND 1994 INTERIMS.
   - 2001 AASHTO "STANDARD SPECIFICATIONS FOR STRUCTURAL SUPPORTS FOR HIGHWAY SIGNS, LUMINAIRES AND TRAFFIC SIGNALS", 4TH EDITION, INCLUDING THE 2002 AND 2003 INTERIMS.
   - DESIGN IS IN ACCORDANCE WITH THE WORKING STRESS DESIGN METHOD. (NO INCREASE IN ALLOWABLE UNIT STRESSES ARE PERMITTED EXCEPT FOR GROUP III LOADINGS WHICH PERMITS A 33% OVERSTRESS.)
4. CONSTRUCTION SPECIFICATIONS AND WORKMANSHIP:
   - PROVIDE MATERIALS AND PERFORM WORK IN ACCORDANCE WITH THE CURRENT VERSION OF THE PENNSYLVANIA DEPARTMENT OF TRANSPORTATION PUBLICATION 408, AASHTO/AWS/D1.5M/D1.5 2002 – BRIDGE WELDING CODE AND THE CONTRACT SPECIAL PROVISIONS. (USE AWS/D1.1/D1.1M 2002 FOR WELDING NOT COVERED IN AASHTO/AWS/D1.5M/D1.5 2002.)
5. DESIGN LOADS:
   - WIND LOAD: PRECAST PANEL 28 PSF
     CAISSONS 28 PSF
     COLUMN 0'–14' 20 PSF
     COLUMN 14'–30' 28 PSF
   - ICE LOAD: 3 PSF (ONE SIDE OF WALL ONLY)
6. TOLERANCES:
   - 1. FABRICATION TOLERANCES:
     1.a REINFORCED PRECAST CONCRETE PANELS. SECTION 714 OF PUBLICATION 408 & AS INDICATED IN PUBLICATION 145.
     1.b STRUCTURAL STEEL POSTS – ASTM A6
     1.c ALL OTHERS

PANELS	(inch)
HEIGHT:	(±1/4)
LENGTH:	(±1/4)
THICKNESS:	(±1/4)
OUT OF FLATNESS:	
• LENGTH TO 8 FT:	(1/8)
• LENGTH OVER 8 FT:	(1/4)

POST	(inch)
LENGTH:	(±1/4)
WIDTH	(±1/4)
DEPTH	(±1/4)
SLOT DEPTH	(±1/8)
SLOT WIDTH	(±1/8)
OUT OF FLATNESS:	
• LENGTH TO 8 FT:	(1/8)
• LENGTH OVER 8 FT:	(1/4)

   - 2. ERECTION TOLERANCES:
     2.a VERTICAL ALIGNMENT

HEIGHT OF WALL	VERTICAL ALIGNMENT OF WALLS
≤ (10 FEET)	(1/4 INCH)
≤ (20 FEET)	(1/2 INCH)
> (20 FEET)	(3/4 INCH)

     2.b HORIZONTAL ALIGNMENT. WALLS AND POSTS TO BE WITHIN (+– 1/2") OF THE INDICATED LOCATION.
     2.c POSTS. SET POSTS WITHIN (+– 1/2") OF THE INDICATED LOCATION.
     2.d POST ROTATION. SET ORIENTATION OF POST WITHIN +–2 DEGREES OF THE INDICATED LOCATION.
     2.e ANCHOR BOLTS. SET ANCHOR BOLTS WITHIN (+– 1/4") OF THE INDICATED LOCATION.
     2.f TOP OF BARRIER, WALL, CAISSON, FOOTING, PEDESTALS & RAISED PANEL SEAT. SET ELEVATIONS WITHIN (+– 1/2")OF THE INDICATED LOCATION.
7. WALL HEIGHTS MUST EQUAL OR EXCEED THE ACOUSTICAL PROFILE.
8. INSTALL POSTS AND PANELS TRULY VERTICAL.
9. PANELS MUST BE LIFTED, STORED AND TRANSPORTED IN THE VERTICAL POSITION ONLY.
10. ALL DIMENSIONS SHOWN ARE HORIZONTAL, EXCEPT AS NOTED.
11. DIMENSIONS SHOWN ARE FOR A NORMAL TEMPERATURE OF 20 DEGREES C (68 DEGREES F).
12. FOOTINGS/CAISSONS:
    - CONSTRUCT EMBANKMENTS AND/OR CUT EXISTING GRADE TO THE TOP OF FOOTING/CAISSON ELEVATIONS PRIOR TO CONSTRUCTION OF FOOTING/CAISSONS.
    - THE CONTRACTOR IS RESPONSIBLE FOR MAINTAINING THE DRILLED OPENING INTACT AND FOR MAINTAINING THE STABILITY OF THE GROUND CUT SLOPE OR FILLED EMBANKMENT DURING DRILLING AND INSTALLATION OF FOOTING/CAISSONS.
    - TEMPORARY CASING MAY BE REQUIRED DURING FOOTING/CAISSON CONSTRUCTION IN ORDER TO MAINTAIN AN OPEN SHAFT. IF CASING IS USED, MAINTAIN CONCRETE LEVELS ABOVE THE BOTTOM OF CASING AT ALL TIMES DURING CASING EXTRACTION TO PREVENT CAVED MATERIAL FROM CONTAMINATING THE CONCRETE.
    - IF GROUNDWATER FLOW ENTERS THE FOOTING/CAISSON EXCAVATION DURING CONSTRUCTION, PLACE CONCRETE BY TREMIE METHODS TO ABOVE THE GROUND WATER ELEVATION IN ONE CONTINUOUS OPERATION. FILL REMAINDER OF FOOTING/CAISSON WITH CLASS A CONCRETE. PLACE EPOXY BONDING COMPOUND BETWEEN POURS, AS REQUIRED.
13. COORDINATE, LOCATE, AND CONDUCT ALL WORK RELATED TO PUBLIC AND PRIVATE UTILITIES IN ACCORDANCE WITH PUBLICATION 408, SECTION 105.06 AND 107.12, AND THE CONTRACT SPECIAL PROVISIONS.
14. SEE BC-776M AND BC-778M FOR ADDITIONAL DETAILS NOT SHOWN.
15. ANTI-GRAFFITI COATINGS ARE NOT RECOMMEDNED ON STAINED CONCRETE SUFACES. GRAFFITI CAN BE MASKED IN THE FIELD USING ADDITIONAL COATS OF THE DECORATIVE STAIN USED DURING THE FABRICATION OF THE WALL PANELS. APPLY ANTI-GRAFFITI COATINGS TO STEEL POST WHERE SPECIFIED OR INDICATED.
16. PROVIDE SHOP DRAWINGS IN ACCORDANCE WITH SECTION 1066 OF PUBLICATION 408.
17. PROVIDE CERTIFICATION AS PER SECTION 105.03(b)3.
18. MEASUREMENT AND PAYMENT IN ACCORDANCE WITH SECTION 1066 OF PUBLICATION 408.

MATERIAL NOTES

1. PRE-CAST CONCRETE:
   - PROVIDE NORMAL WEIGHT CLASS AA CEMENT CONCRETE IN THE WALL PANELS (AND COLUMNS WHEN APPLICABLE). (5,000 PSI)
2. CAST-IN-PLACE CONCRETE:
   - PROVIDE NORMAL WEIGHT CLASS A CEMENT CONCRETE IN THE CAST-IN-PLACE FOOTINGS, PEDESTALS, AND FOOTING/CAISSONS.
     f'c = (3,000 PSI)
   - DENSITY OF CONCRETE = (UNIT WEIGHT OF CONCRETE = 145–150 LB. / CU. FT.)
3. REINFORCEMENT STEEL:
   - PROVIDE GRADE 420 (GRADE 60) DEFORMED REINFORCING BARS
     PROVIDE GRADE 450 (GRADE 65) PLAIN WELDED WIRE FABRIC IN THE PRECAST CONCRETE PANEL
     PROVIDE GRADE 480 (GRADE 70) DEFORMED WELDED WIRE FABRIC IN THE PRECAST CONCRETE PANEL
     THAT MEET THE REQUIREMENTS OF ASTM A615M (A615) , ASTM A996M (A996) , OR ASTM A706M (A706). DO NOT WELD REINFORCING BARS UNLESS SPECIFIED. DO NOT USE RAIL STEEL A996M (A996) REINFORCEMENT BARS IN FOOTINGS, CAISSONS, OR WHERE BENDING OR WELDING OF REINFORCEMENT BARS IS INDICATED.
     (24,000 PSI)
   - PROVIDE UNCOATED REINFORCEMENT IN THE FOOTINGS AND CAISSONS.
     PROVIDE UNCOATED, EPOXY COATED, OR GALVANIZED REINFORCEMENT IN THE RAISED PANEL SEATS AND PEDESTALS AS SPECIFIED ON THE CONTRACT DRAWINGS.
   - PROVIDE MINIMUM LAP AND EMBEDMENT LENGTH FOR REINFORCING BARS OF 30 DIAMETERS OR IN ACCORDANCE WITH THE CURRENT AASHTO SPECIFICATIONS AS MODIFIED BY THE DESIGN MANUAL PART 4, WHICHEVER IS GREATER.
   - MECHANICAL CONNECTIONS, WHICH MEET THE REQUIREMENTS OF PUBLICATION 408, SECTION 1002, MAY BE USED UPON ACCEPTANCE FROM THE ENGINEER.
4. FABRICATED STRUCTURAL STEEL:
   - PROVIDE STRUCTURAL STEEL CONFORMING TO AASHTO M270M (M270) GRADE 250 (36) [ASTM A709M (A709) , GRADE 250 (36)] UNLESS OTHERWISE NOTED.
   - PROVIDE STRUCTURAL STEEL TUBING CONFORMING TO ASTM A53M (A53) , GRADE B, TYPE E FOR THE STEEL ANGLED AND CORNER POSTS. (35 KSI)
   - WEATHERING STEEL (A588) IS NOT PERMITTED.
   - PROVIDE MINIMUM WELD SIZE OF (3/8").
   - NON-DESTRUCTIVE TESTING IS REQUIRED FOR STEEL POST TO BASE PLATE WELDS. PROVIDE TESTING IN ACCORDANCE WITH AASHTO/AWS/D1.5M/D1.5 2002 FOR MAIN MEMBER.
   - GALVANIZE AND PAINT STEEL POSTS, PLATES, AND HARDWARE IN ACCORDANCE WITH PUBLICATION 408, SECTION 1105.02(a) AND 1060.2(b).
   - CLEAN AND PREPARE GALVANIZED SURFACES FOR PAINTING IN ACCORDANCE WITH PUBLICATION 408, SECTION 1060. 3 (b) 4.
   - REPAIR DAMAGED GALVANIZING IN ACCORDANCE WITH PUBLICATION 408, SECTION 1105.02(a)2.
5. WELDED STUDS:
   - PROVIDE (7/8" x 4") STUDS CONFORMING TO ASTM A108 IN ACCORDANCE WITH PUBLICATION 408, SECTION 1105.02(e).
6. PLAIN NEOPRENE BEARING PADS AND ELASTOMERIC PADS:
   - PROVIDE PLAIN NEOPRENE PADS WITH A DUROMETER HARDNESS OF 50 IN ACCORDANCE WITH PUBLICATION 408, SECTION 1113.02.
7. EPOXY BONDING COMPOUND:
   - PROVIDE EPOXY BONDING COMPOUND IN ACCORDANCE WITH PUBLICATION 408, SECTION 706.1. OR EQUIVALENT SUCH AS BASF, EUCLID, POLY-CARB, MEADOWS OR SIKA.
8. JOINT SEALING MATERIAL:
   - PROVIDE JOINT SEALING MATERIAL IN ACCORDANCE WITH PUBLICATION 408, SECTION 705.4(a). OR EQUIVALENT SUCH AS MANUS BOND 64-A OR BUTYL TAPE ADHESIVE SEALANT.
   - JOINT SEALING MATERIAL TO MATCH FINAL COLOR OF PANEL.
9. ANTIGRAFFITI COATING:
   - ANTI-GRAFFITI COATINGS ARE NOT RECOMMEDNED ON STAINED CONCRETE SUFACES. GRAFFITI CAN BE MASKED IN THE FIELD USING ADDITIONAL COATS OF THE DECORATIVE STAIN USED DURING THE FABRICATION OF THE WALL PANELS. APPLY ANTI-GRAFFITI COATINGS TO STEEL POST WHERE SPECIFIED OR INDICATED.
10. PENETRATING CONCRETE STAIN:
    - APPLY STAIN IN ACCORDANCE WITH CONTRACT DRAWINGS AND SPECIAL PROVISIONS.
    - USE PREMIUM, WATER BASED ACRYLIC POLYMER STAIN DESIGNED FOR VERTICAL CONCRETE SURFACES SUCH AS SHERWIN-WILLIAMS LOXON®, SHERWIN-WILLIAMS H&C SHIELD PLUS ULTRA® OR KWAL STONE-FX™.

INDEX OF SHEETS

SHT. NO	SHEET TITLE
1 OF 5	GENERAL NOTES
2 OF 5	GEOMETRY LAYOUT & DETAILS
3 OF 5	DETAILS
4 OF 5	DETAILS
5 OF 5	DETAIL 3 & CAISSON DESIGN TABLES, HEIGHT ZONE FOR GROUND MOUTED SOUND BARRIERS SECTION & ELEVATOIN

PENNSYLVANIA
DEPARTMENT OF TRANSPORTATION
RECOMMENDED
Thomas P Macioce
CHIEF BRIDGE ENGINEER
10 / 5 / 2012

COMMONWEALTH OF PENNSYLVANIA
REGISTERED PROFESSIONAL
GEORGE E. MIKS
ENGINEER
PE-061280-E
10/10/12

DRAWN: DATE: 08/10/2012 CHK'D. ENG CHK
ENGINEER: PM:

DATE	REVISION	DATE	REVISION
REV1	REVDESC1	REV4	REVDESC4
REV2	REVDESC2	REV5	REVDESC5
REV3	REVDESC3	REV6	REVDESC6

PADOT DRAWING 2011-275 PE

COMMONWEALTH OF PENNSYLVANIA
DEPARTMENT OF TRANSPORTATION
BUREAU OF PROJECT DELIVERY

STANDARD
FABCON SENTRYCAST WALL PANELS

GENERAL NOTES

FABCON
PH:(570) 773-2480
1200 MOREA ROAD
MAHANOY CITY, PA 17948

SHEET 1 OF 5

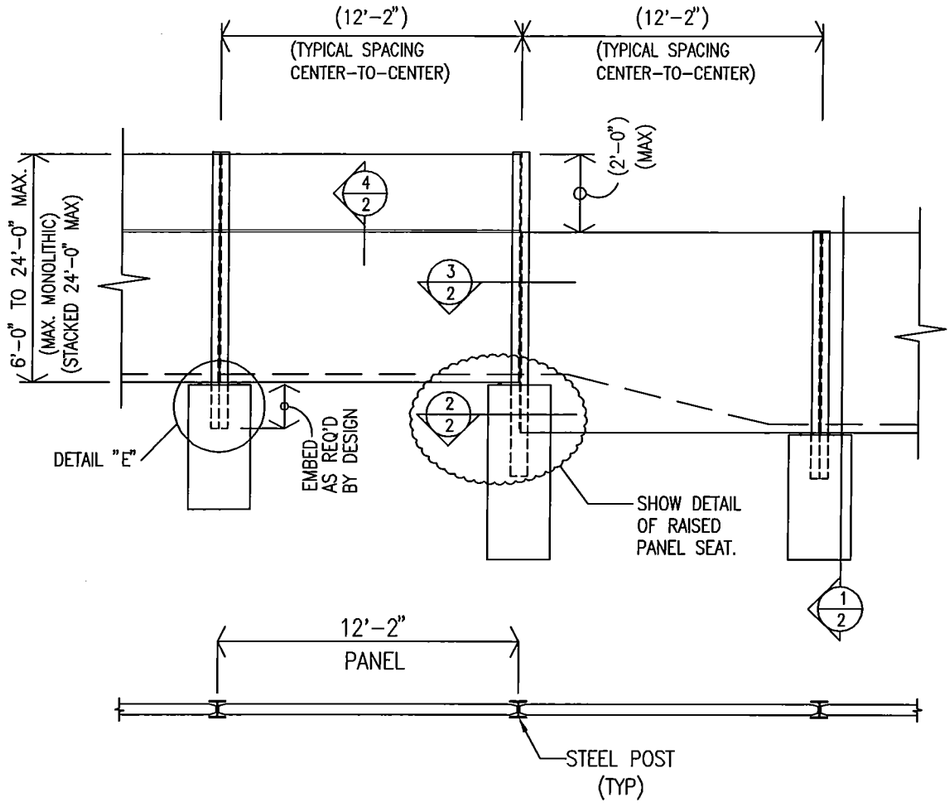

SOUND WALL ELEVATION

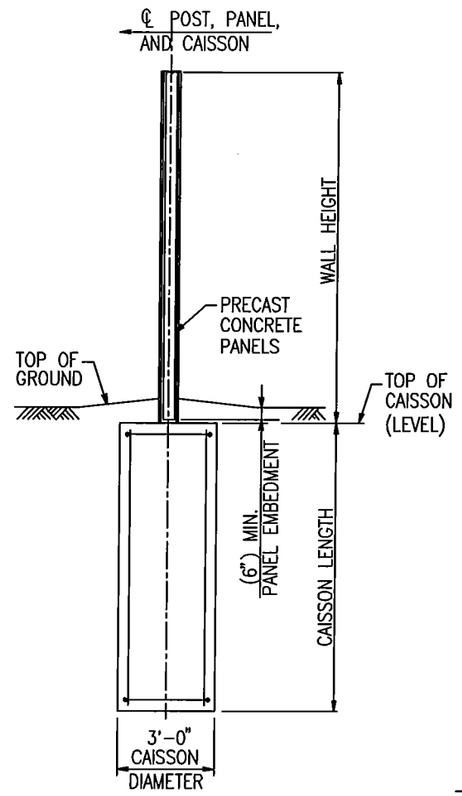

1/2 DETAIL
N.T.S.

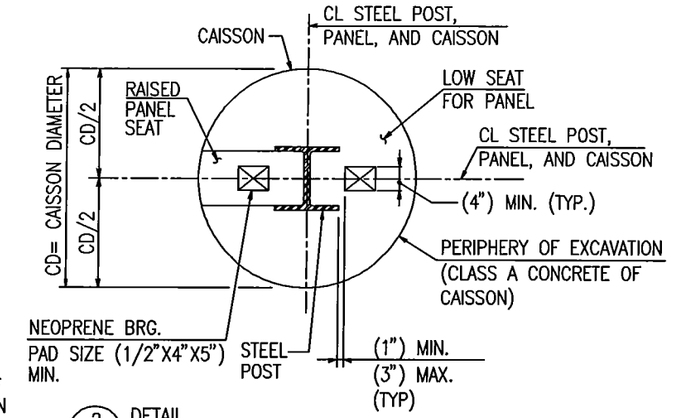

2/2 DETAIL
N.T.S.

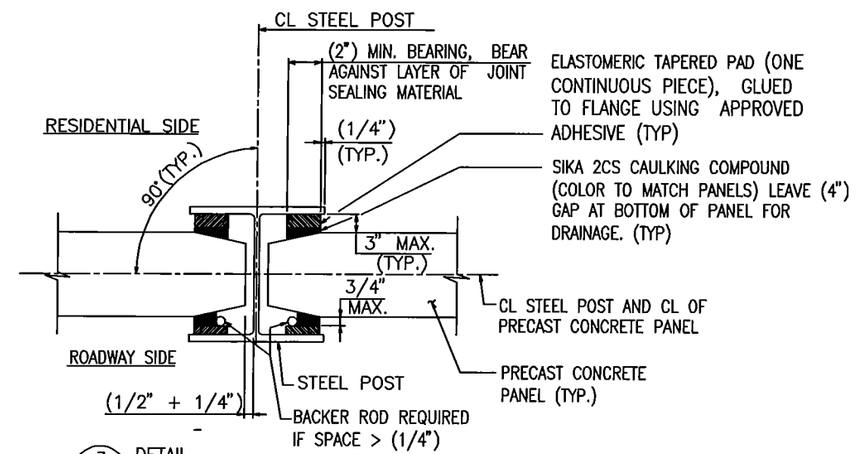

3/2 DETAIL
N.T.S.

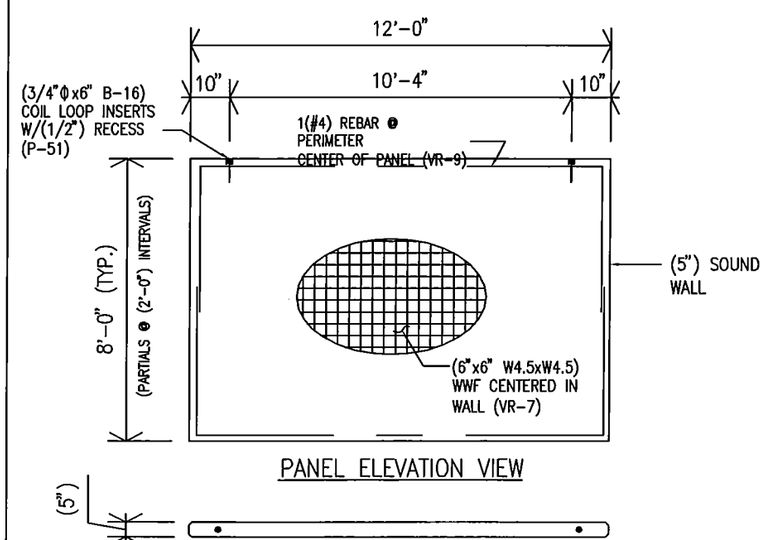

PANEL ELEVATION VIEW

PANEL PLAN VIEW

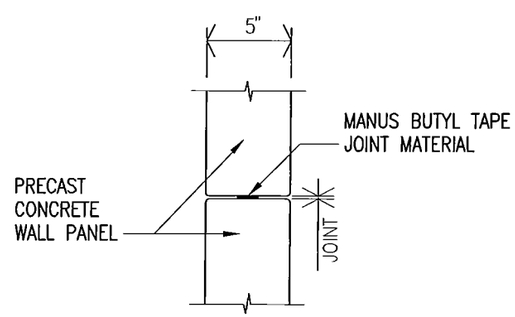

4/2 HORIZONTAL JOINT DETAIL
N.T.S.

10 / 5 / 2012 PADOT DRAWING 2011-275 PE

COMMONWEALTH OF PENNSYLVANIA
DEPARTMENT OF TRANSPORTATION
BUREAU OF PROJECT DELIVERY

STANDARD

FABCON SENTRYCAST WALL PANELS

GEOMETRY LAYOUT & DETAILS

COMMONWEALTH OF PENNSYLVANIA REGISTERED PROFESSIONAL GEORGE E. MIKS ENGINEER PE 061288

DRAWN: DATE: 08/10/2012 CHK'D. ENG CHK
ENGINEER: PM:

DATE	REVISION	DATE	REVISION
REV1	REVDESC1	REV4	REVDESC4
REV2	REVDESC2	REV5	REVDESC5
REV3	REVDESC3	REV6	REVDESC6

FABCON

PH:(570) 773-2480
1200 MOREA ROAD
MAHANOY CITY, PA 17948

SHEET 2 OF 5

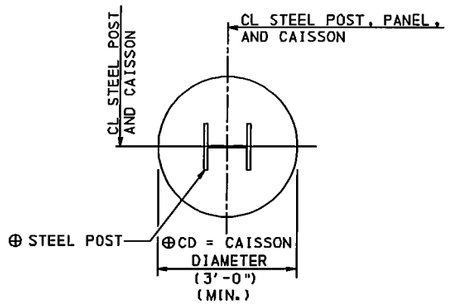

PLAN

@ DETAIL E

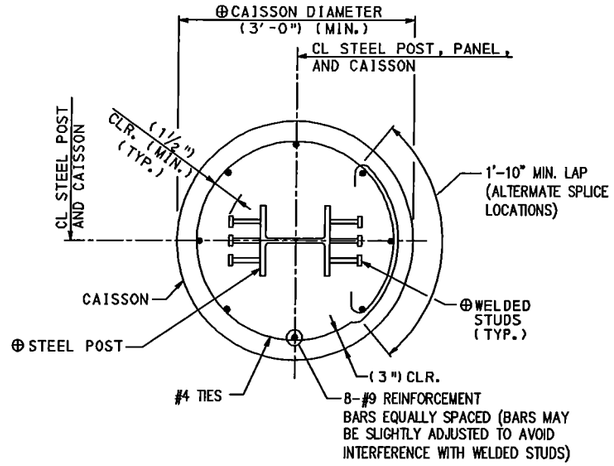

SECTION K-K

@ DETAIL E

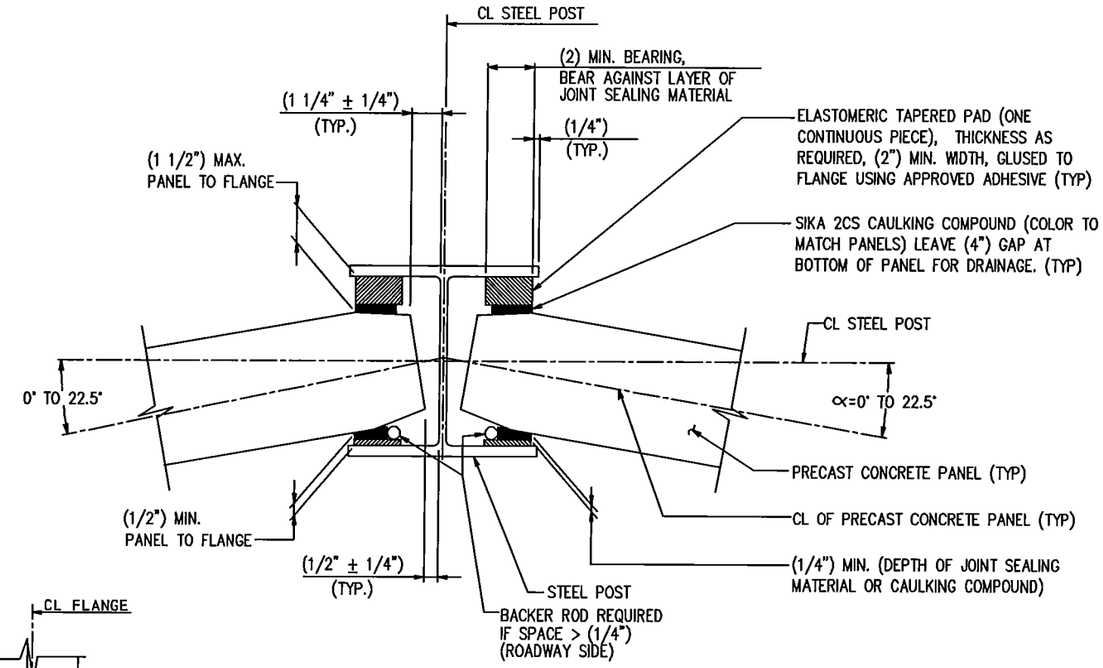

ANGLED PANELS

SECTION C-C (STEEL H-POST)

PANEL ORIENTATION IN RELATIONSHIP
TO CENTERLINE OF POST

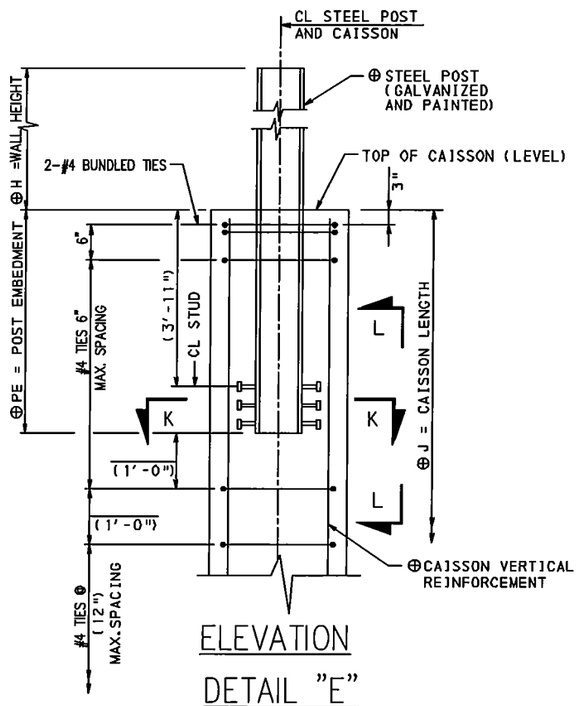

ELEVATION

DETAIL "E"

STEEL POST EMBEDDED IN CAISSON

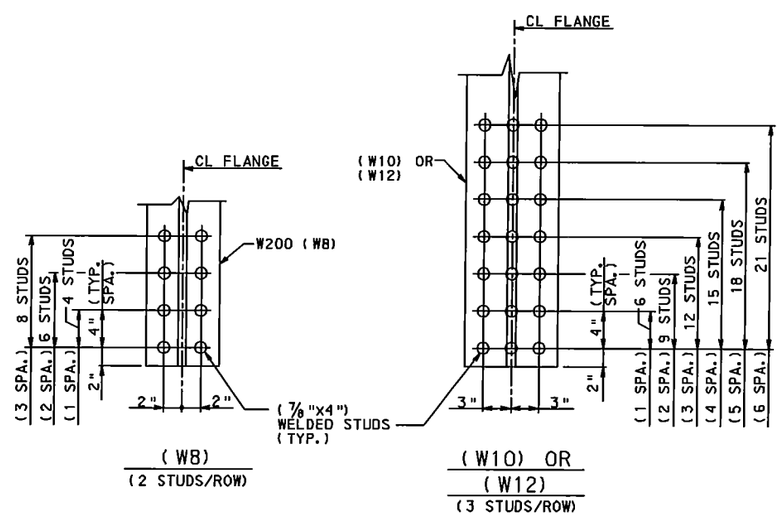

SECTION L-L

WELDED STUDS

*SEE TABLE ON SHEET 5 FOR COLUMN SIZE AND NUMBER OF STUDS.

NOTES:
* SECTIONS K-K, L-L DETAIL E(DETAIL3) ARE FROM PENNDOT STANDARD DRAWING BD-678M SHEET 10.

COMMONWEALTH OF PENNSYLVANIA
REGISTERED
PROFESSIONAL
GEORGE E. MIKS
ENGINEER
PE-061236
PENNSYLVANIA

10 / 5 / 2012 PADOT DRAWING 2011-275 PE

COMMONWEALTH OF PENNSYLVANIA
DEPARTMENT OF TRANSPORTATION
BUREAU OF PROJECT DELIVERY

STANDARD

FABCON SENTRYCAST WALL PANELS

DETAILS

DRAWN: DATE: 08/10/2012 CHK'D. ENG CHK
ENGINEER: PM:

DATE	REVISION	DATE	REVISION
REV1	REVDESC1	REV4	REVDESC4
REV2	REVDESC2	REV5	REVDESC5
REV3	REVDESC3	REV6	REVDESC6

FABCON

PH:(570) 773-2480
1200 MOREA ROAD
MAHANOY CITY, PA 17948

SHEET 3 OF 5

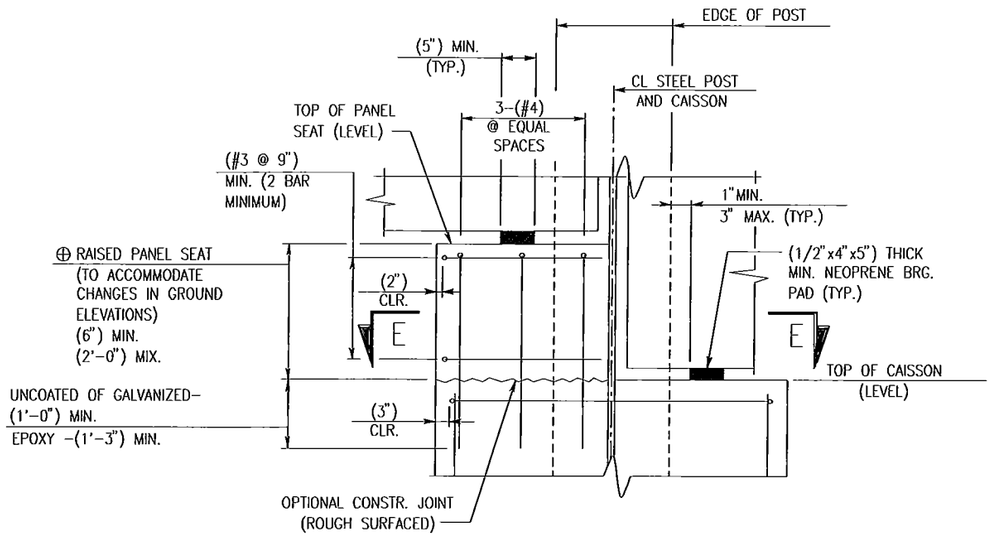

RAISED PANEL SEAT TYPICAL PANEL SEAT

PANEL SEAT ELEVATION WITHOUT BASE PLATE

(DETAIL FOR CAISSON SHOWN
DETAIL FOR FOOTING IS SIMILAR)

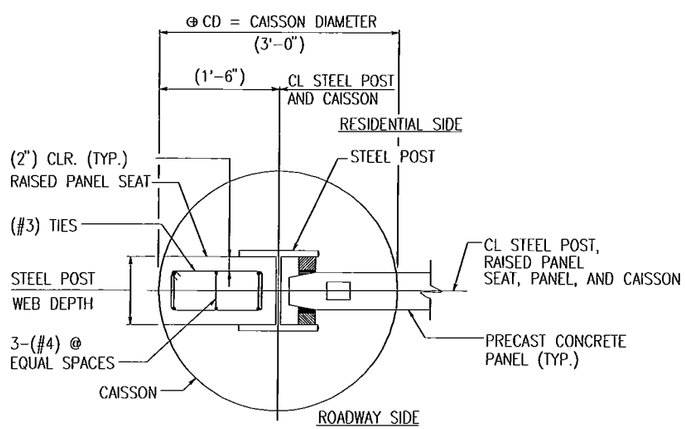

RAISED PANEL SEAT TYPICAL PANEL SEAT

SECTION E-E

NOTE:

- PANEL SEAT ELEVATION WITHOUT BASE PLATE FROM PENNDOT STANDARD DRAWING BC-778M SHEET 4
- SECTION E-E FROM PENNDOT STANDARD DRAWING BC-778M SHEET-4

10 / 5 / 2012 PADOT DRAWING 2011-275 PE

COMMONWEALTH OF PENNSYLVANIA
DEPARTMENT OF TRANSPORTATION
BUREAU OF PROJECT DELIVERY

STANDARD
FABCON SENTRYCAST WALL PANELS

DETAILS

COMMONWEALTH OF PENNSYLVANIA
REGISTERED PROFESSIONAL
GEORGE E. MIKS
ENGINEER
PE-061288

DRAWN: DATE: 08/10/2012 CHK'D. ENG CHK
ENGINEER: PM:

DATE	REVISION	DATE	REVISION
REV1	REVDESC1	REV4	REVDESC4
REV2	REVDESC2	REV5	REVDESC5
REV3	REVDESC3	REV6	REVDESC6

FABCON

PH:(570) 773-2480
1200 MOREA ROAD
MAHANOY CITY, PA 17948

SHEET 4 OF 5

DETAIL 3
U.S. CUSTOMARY UNITS

STEEL POST
EMBEDDED IN CAISSON
HEIGHT ZONE 0'–14'
WIND PRESSURE = 20 psf

STEEL POST				
POST SPACING PS (FT.)	WALL HEIGHT H (FT.)	STEEL POST	NUMBER OF WELDED STUDS	PE (IN.)
12.0	6.0	W8x31	4	53
	8.0	W8x31	4	53
	10.0	W8x31	4	53
	12.0	W8x31	6	57
	14.0	W8x48	6	57
	16.0	W10x49	9	57
	18.0	W10x60	9	57
	20.0	W10x77	12	61
	22.0	W10x100	12	61
	24.0	W12x120	12	61

* SIZES PER PENNDOT STANDARD DRAWING BD–678M SHEET 11

DETAIL 3
U.S. CUSTOMARY UNITS

STEEL POST
EMBEDDED IN CAISSON
HEIGHT ZONES OVER 14'
WIND PRESSURE = 28 psf

STEEL POST				
POST SPACING PS (FT.)	WALL HEIGHT H (FT.)	STEEL POST	NUMBER OF WELDED STUDS	PE (IN.)
12.0	6.0	W8x31	4	53
	8.0	W8x31	4	53
	10.0	W8x31	6	57
	12.0	W8x40	6	57
	14.0	W10x49	9	57
	16.0	W10x60	9	57
	18.0	W10x77	12	61
	20.0	W10x100	15	65
	22.0	W12x120	15	65
	24.0	W12x120	15	65

CAISSON LENGTH
U.S. CUSTOMARY UNITS
WIND PRESSURE = 28 psf

TYPE 1 SOIL — SATURATED LOOSE SAND

SOIL PROPERTIES:
1. ANGLE OF INT. FRICT. = 30°
2. C = 0.0 LB./SQ. FT.
3. UNIT WEIGHT = 100 LB./CU. FT.
4. k = 20 LB./CU. IN.

POST SPACING PS (FT.)	WALL HEIGHT H (FT.)	J (FT.)
12.0	6.0	12.0
	8.0	13.0
	10.0	14.5
	12.0	15.5
	14.0	16.5
	16.0	17.5
	18.0	18.5
	20.0	19.0
	22.0	20.0
	24.0	21.0

TYPE 2 SOIL — DRY MEDIUM DENSE SAND

SOIL PROPERTIES:
1. ANGLE OF INT. FRICT. = 34°
2. C = 0.0 LB./SQ. FT.
3. UNIT WEIGHT = 120 LB./CU. FT.
4. k = 90 LB./CU. IN.

POST SPACING PS (FT.)	WALL HEIGHT H (FT.)	J (FT.)
12.0	6.0	9.0
	8.0	9.0
	10.0	10.0
	12.0	10.5
	14.0	11.0
	16.0	11.5
	18.0	12.0
	20.0	12.5
	22.0	13.0
	24.0	13.5

TYPE 3 SOIL — SATURATED SOFT CLAY

SOIL PROPERTIES:
1. ANGLE OF INT. FRICT. = 0°
2. C = 500 LB./SQ. FT.
3. UNIT WEIGHT = 100 LB./CU. FT.
4. k = 100 LB./CU. IN.

	WALL HEIGHT H (FT.)	J (FT.)
12.0	6.0	9.5
	8.0	11.0
	10.0	13.0
	12.0	14.5
	14.0	16.0
	16.0	18.0
	18.0	19.5
	20.0	21.0
	22.0	22.5
	24.0	24.0

TYPE 4 SOIL — DRY MEDIUM STIFF CLAY

SOIL PROPERTIES:
1. ANGLE OF INT. FRICT. = 0°
2. C = 1000 LB./SQ. FT.
3. UNIT WEIGHT = 120 LB./CU. FT.
4. k = 200 LB./CU. IN.

	WALL HEIGHT H (FT.)	J (FT.)
12.0	6.0	9.0
	8.0	9.0
	10.0	9.0
	12.0	10.0
	14.0	10.5
	16.0	11.5
	18.0	12.5
	20.0	13.5
	22.0	14.5
	24.0	15.0

* DEPTH PER PENNDOT STANDARD DRAWING BD–678M SHEET 18

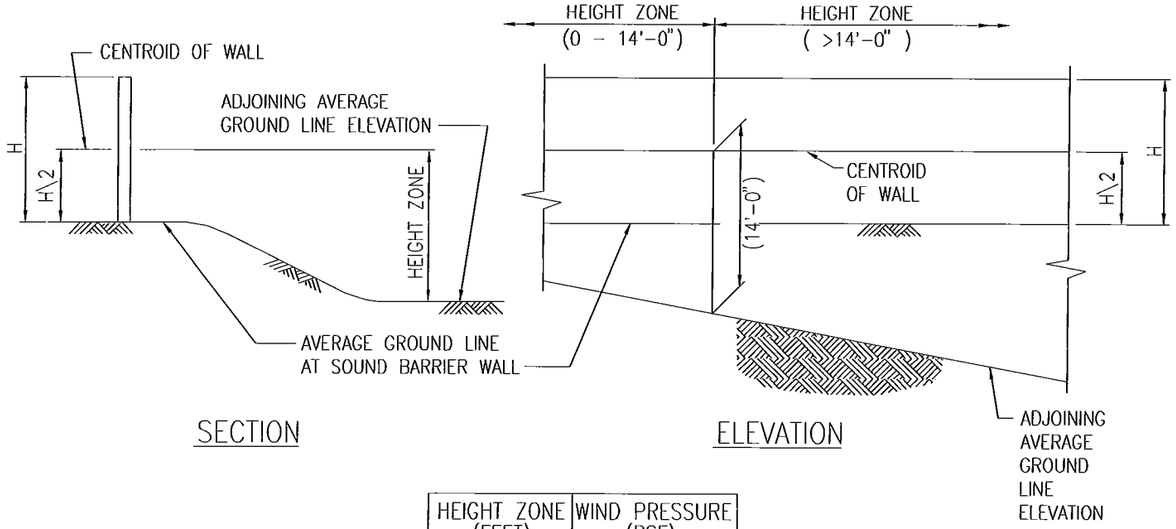

HEIGHT ZONE (FEET)	WIND PRESSURE (PSF)
0–14	20
OVER 14	28

NOTE:
* MAXIMUM STANDARD SPAN OF PANEL, POST TO POST IS 12'–0".

HEIGHT ZONES FOR GROUND MOUNTED SOUND BARRIERS

* FROM PENNDOT STANDARD DRAWING BD–678M SHEET 1

COMMONWEALTH OF PENNSYLVANIA REGISTERED PROFESSIONAL GEORGE E. MIKS ENGINEER PE-061288 PENNSYLVANIA

10 / 5 / 2012 PADOT DRAWING 2011–275 PE

COMMONWEALTH OF PENNSYLVANIA
DEPARTMENT OF TRANSPORTATION
BUREAU OF PROJECT DELIVERY

STANDARD
FABCON SENTRYCAST WALL PANELS

DETAIL 3 & CAISSON DESIGN TABLES, HEIGHT ZONE FOR GROUND MOUTED SOUND BARRIERS SECTION & ELEVATOIN

DRAWN: ____ DATE: 08/10/2012 CHK'D. ENG CHK
ENGINEER: ____ PM: ____

DATE	REVISION	DATE	REVISION
REV1	REVDESC1	REV4	REVDESC4
REV2	REVDESC2	REV5	REVDESC5
REV3	REVDESC3	REV6	REVDESC6

FABCON
PH:(570) 773–2480
1200 MOREA ROAD
MAHANOY CITY, PA 17948

Product:

Item 9000-7007 - Zoneguard™
Portable Steel Barrier System
Hill & Smith, Inc.
PennDOT Drawing # 12-602-BDTD

Approval Date:
February 22, 2013

Initiated By SOL:
483-13-02

Application/Use:

Zoneguard™ Portable Steel Barrier System manufactured by Hill and Smith, Inc. of Columbus, Ohio has been approved for use as a temporary barrier (structure mounted).

Zoneguard™ Portable Steel Barrier System usage has the following restrictions:

- Only to be used for temporary installations (i.e., less than three (3) years).
- "Standard Installation" configuration of this barrier with a 6 ft. width of deck behind it is approved as an NCHRP 350 Test Level 4 (TL-4) longitudinal barrier. This barrier has also been given approval as a TL-3 barrier under AASHTO's Manual for Assessing Safety Hardware 2008 (MASH-08).
- "Minimum Deflection Installation" configuration of this barrier with no deck width behind it is approved as an NCHRP 350 Test Level 3 (TL-3) longitudinal barrier. This barrier installation has also been approved as a MASH TL-3 longitudinal barrier.
- See the General Notes on drawing Sheet No. 1 for additional details. The amount of permanent deflection at the base is listed along with the dynamic deflection for each configuration.
- Two different sizes of anchors are permitted and have either 4" or 6" embedment depths required into concrete bridge deck. Anchor quantities and locations are shown on PennDOT Drawing No. 12-602-BDTD, Sheet No. 2.
- Adhesive anchors are to comply with and be installed and tested per Pub. 408 Section 643.
- Maximum length of barrier unit is 50'-0".
- Barrier system is not permitted for use when asphalt overlay thickness exceeds 3". For installation of barrier on asphalt overlay, anchors require pipe sleeves which match the thickness of the overlay.
- Three types of blunt end treatment transitions are included on drawing Sheets No. 5 to 7.
- Chief Bridge Engineer approval is required for Temporary Steel Barrier Systems use on bridge decks which exceed these limitations.

Specifications:

Design/Material/Construction Specifications for this temporary barrier system are specified on PennDOT Drawing No. 12-602-BDTD dated 2/22/13 of Zoneguard™ Portable Steel Barrier System details for your use.

Comments:

The contractor will be required to revise the pertinent contract drawings as per DM-4, PP 1.10 to show the usage of “Zoneguard™ Portable Steel Barrier System”.

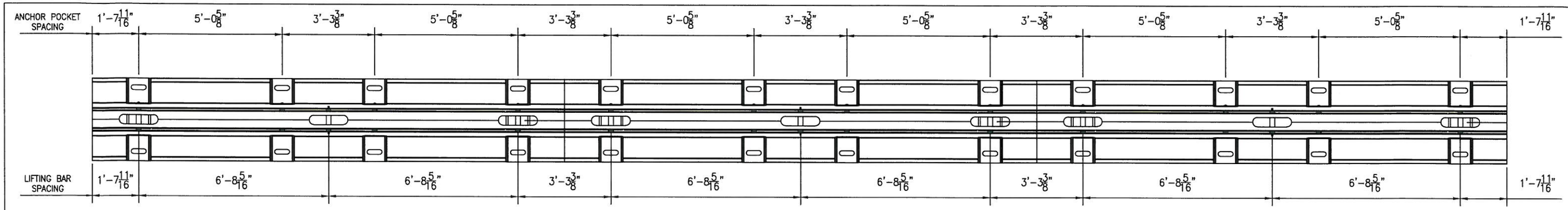

PLAN

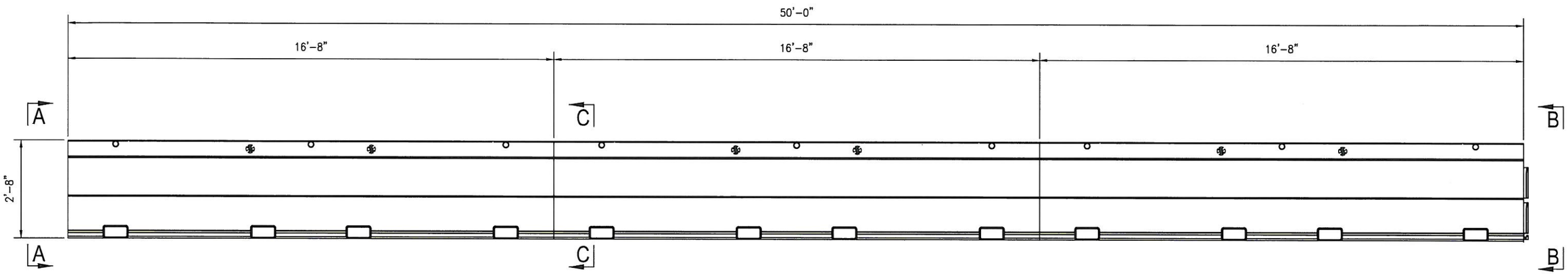

ELEVATION

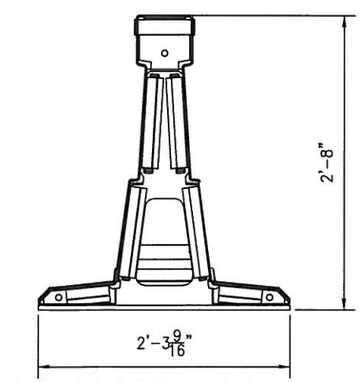

VIEW A-A (ENLARGED)
MALE END

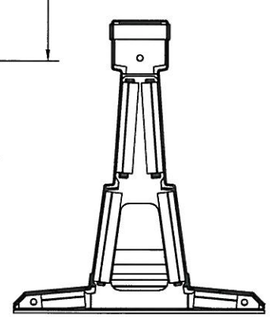

VIEW B-B (ENLARGED)
FEMALE END

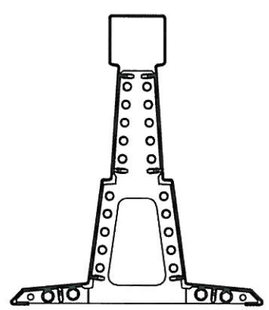

SECTION C-C (ENLARGED)
SHOP JOINT

GENERAL NOTES:

1) APPROXIMATE WEIGHT OF ONE UNIT IS 3097 LBS.
2) BARRIER CONNECTION DETAILS ARE SHOWN ON SHEET 3.
3) ANCHOR QUANTITIES AND LOCATIONS ARE SHOWN ON SHEET 2.
4) ANCHOR INSTALLATION DETAILS ARE SHOWN ON SHEET 3.
5) THE STANDARD INSTALLATION CONFIGURATION SHOWN ON SHEET 2 HAS BEEN DEEMED ELIGIBLE AS AN NCHRP 350 TL-3 & TL-4 LONGITUDINAL BARRIER AS WELL AS MASH TL-3. REF. FHWA LETTERS B-176 & B-176A. PERMANENT DEFLECTION AT THE BASE OF THE BARRIER DURING THE 350 TL-4 TEST WAS 3'-6", DYNAMIC DEFLECTION WAS 4'-2".
6) THE MINIMUM DEFLECTION INSTALLATION CONFIGURATION SHOWN ON SHEET 2 HAS BEEN DEEMED ELIGIBLE AS AN NCHRP 350 TL-3 AND MASH TL-3 LONGITUDINAL BARRIER. REF. FHWA LETTERS B-176 & B-176A. PERMANENT DEFLECTION AT THE BASE OF THE BARRIER DURING THE 350 TL-3 TEST WAS ZERO, DYNAMIC DEFLECTION WAS 0'-2".
7) BLUNT ENDS OF ZONEGUARD SHALL BE PROTECTED AS PER PLANS AND SPECS. SEE SHEETS 5-7 FOR TRANSITIONS FROM ZONEGUARD TO COMMONLY USED CRASH CUSHIONS.
8) THESE DRAWINGS DEPICT INSTALLATION DETAILS FOR ZONEGUARD FOR TEMPORARY APPLICATIONS ON BRIDGES ONLY.
9) THESE DRAWINGS PROVIDE DETAILS FOR TEMPORARY INSTALLATIONS ONLY. ZONEGUARD INSTALLATION MAY BE ALLOWABLE IN PERMANENT APPLICATIONS BUT IS NOT ADDRESSED OR APPROVED HEREIN.

2 / 22 / 2013

PENNSYLVANIA
DEPARTMENT OF TRANSPORTATION
RECOMMENDED
Thomas P Macioce
CHIEF BRIDGE ENGINEER

COMMONWEALTH OF PENNSYLVANIA
REGISTERED PROFESSIONAL
JAMES N. WILKERSON
ENGINEER
No. 79293
1/24/13

XD ENGINEERING, PLC
977 FILLMORE AVE NW
PIEDMONT, OK 73078

REV	REMARKS	DATE	CHK

DRAWN BY	DATE	MATERIAL
GL	JAN 2013	–
SCALE NONE	FINISH –	WEIGHT –

Description
ZONEGUARD PORTABLE
STEEL BARRIER
STANDARD 50'-0
UNIT DETAILS

UNCONTROLLED WHEN PRINTED

HILL & SMITH INC.
1000 BUCKEYE PARK ROAD
COLUMBUS, OHIO 43207
(614)-340-6294
www.hillandsmith.com

PennDOT Drawing No.
12-602-BDTD, SHT. 1 OF 7

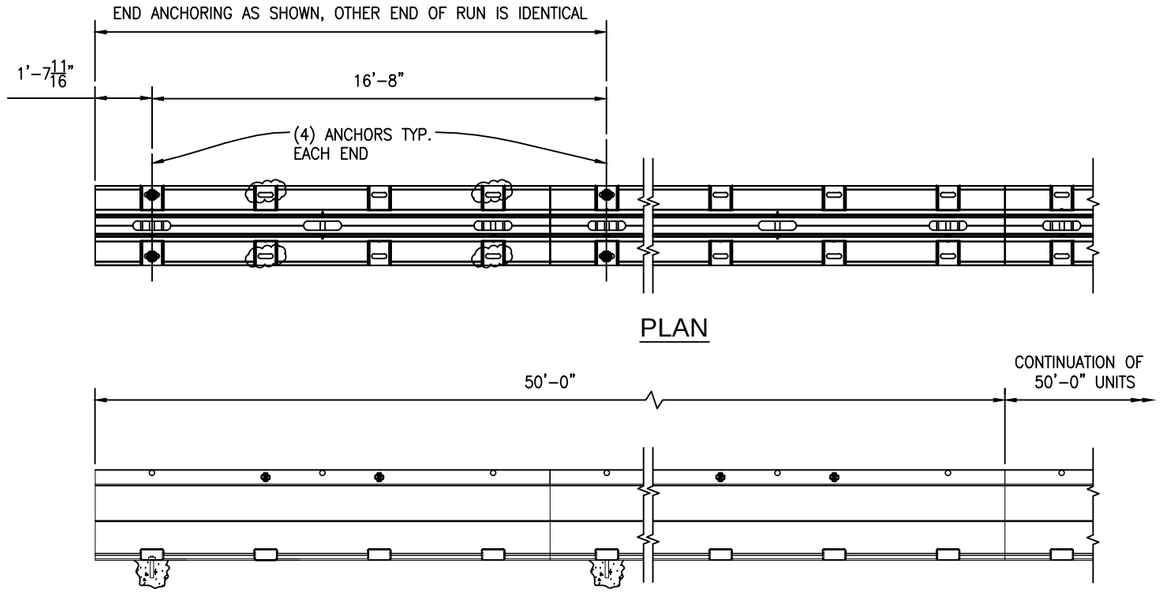

ANCHORING CONFIGURATION - STANDARD INSTALLATION

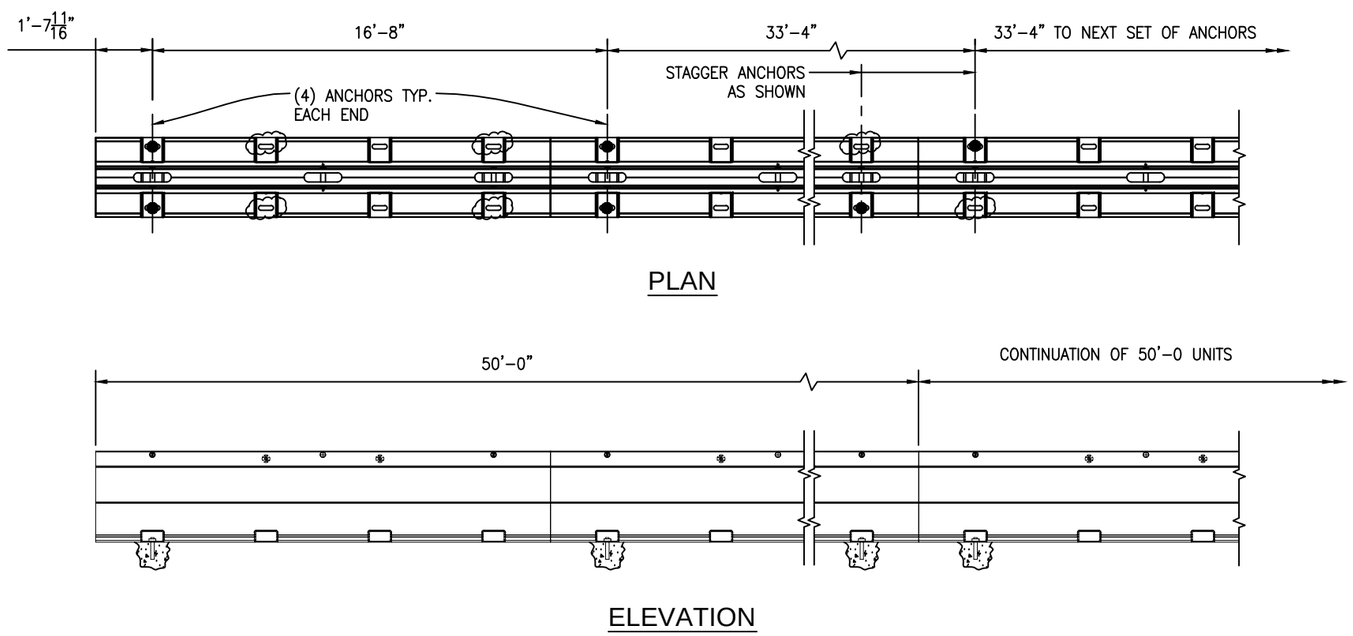

ANCHORING CONFIGURATION - MINIMUM DEFLECTION INSTALLATION

ANCHOR LOCATION NOTES:

1) STANDARD SYSTEM INSTALLATION REQUIRES ANCHORS AT EACH END OF RUN ONLY, AS SHOWN.
2) MINIMUM DEFLECTION SYSTEM INSTALLATION REQUIRES ANCHORING AT EACH END OF THE RUN AND (2) ANCHORS EVERY 33'-4" AS SHOWN.
3) THE ANCHORING CONFIGURATIONS SHOWN ARE BASED UPON USING $1\frac{1}{4}$"ø ANCHORS IN LOCATIONS SHOWN THUS: ●
4) WHEN USING $1\frac{1}{4}$"ø ANCHORS, MINIMUM CONCRETE THICKNESS MUST BE 8". $\frac{7}{8}$"ø ANCHORS MAY BE USED WITH 6" MINIMUM CONCRETE THICKNESS, HOWEVER THE QUANTITY OF ANCHORS MUST BE DOUBLED. ADDED LOCATIONS WHEN USING $\frac{7}{8}$"ø ANCHORS ARE SHOWN CLOUDED.
5) FOR COMPLETE ANCHORING DETAILS, SEE SHEET 3.

2 / 22 / 2013

COMMONWEALTH OF PENNSYLVANIA
REGISTERED PROFESSIONAL
JAMES N. WILKERSON
ENGINEER
No. 79293

REV	REMARKS	DATE	CHK

DRAWN BY	DATE	MATERIAL
GL	JAN 2013	–
SCALE	**FINISH**	**WEIGHT**
NONE	–	–

Description

ZONEGUARD PORTABLE
STEEL BARRIER
ANCHORING LOCATIONS

UNCONTROLLED WHEN PRINTED

HILL & SMITH INC.
1000 BUCKEYE PARK ROAD
COLUMBUS, OHIO 43207
(614)–340–6294
www.hillandsmith.com

PennDOT Drawing No.
12–602–BDTD, SHT. 2 OF 7

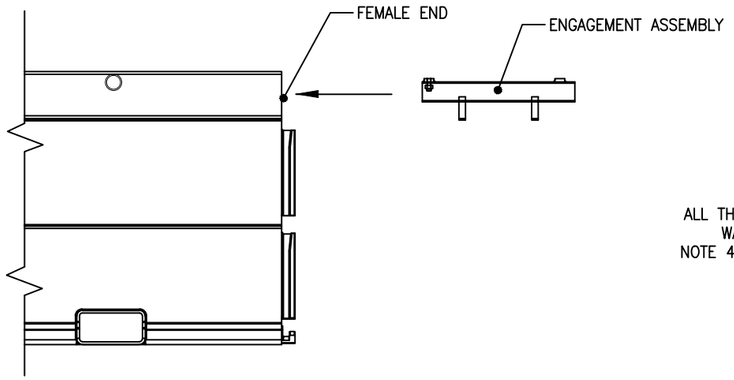

CONNECTION DETAIL - STEP 1

INSERT ENGAGEMENT ASSEMBLY INTO END

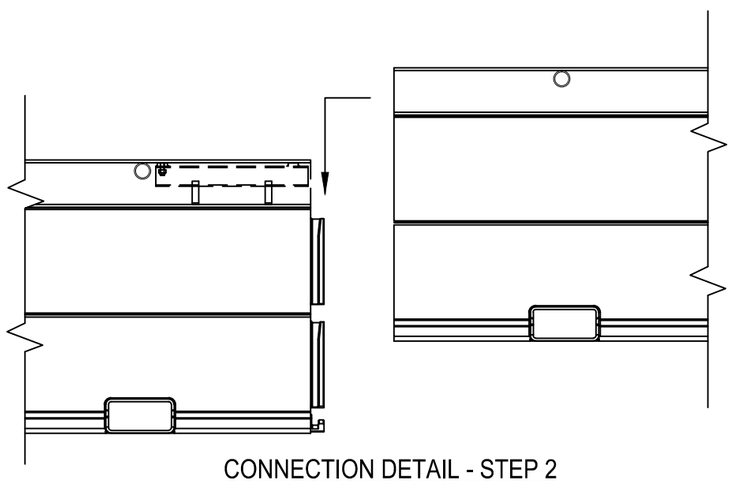

CONNECTION DETAIL - STEP 2

SLIDE MALE END ONTO FEMALE

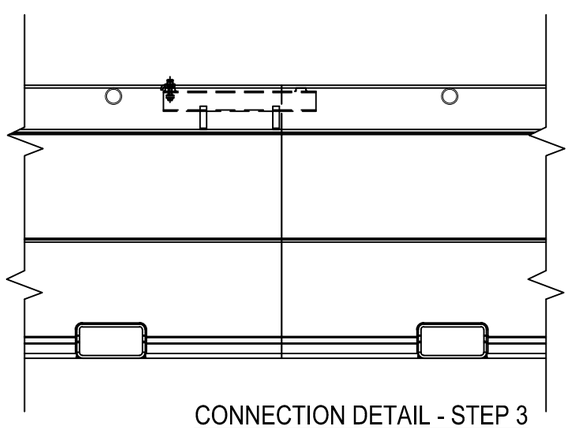

CONNECTION DETAIL - STEP 3

REACH THROUGH OPENING IN TOP OF BARRIER, SLIDE ENGAGEMENT ASSEMBLY TO ENGAGE MALE END, AND TIGHTEN ALLEN HEAD BOLT

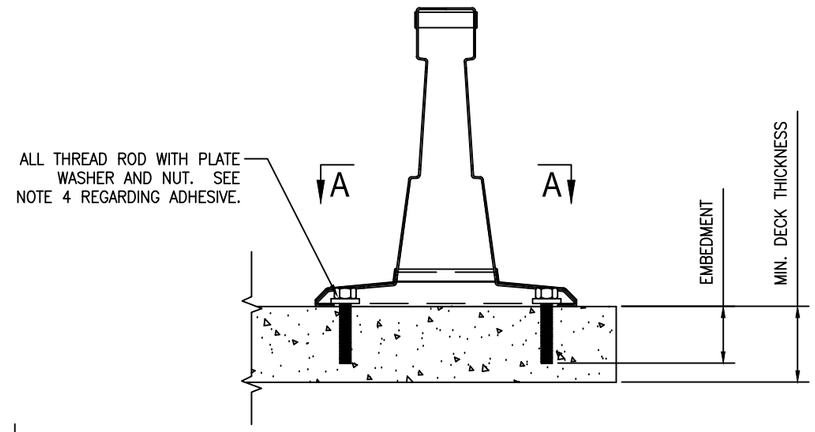

TYPICAL CONCRETE ANCHORING DETAIL

ANCHOR DIMENSIONS			
ANCHOR DIAMETER	ANCHOR LENGTH	EMBEDMENT	MIN. DECK THICKNESS
$1\frac{1}{4}$"	0'–9"	6"	8"
$\frac{7}{8}$"	0'–7"	4"	6"

CONCRETE ANCHORING NOTES

1) FOR QUANTITY AND LOCATION OF ANCHORS SEE SHEET 2.
2) ANCHOR MATERIAL SHALL BE THREADED ROD PER ASTM F1554 GR55.
3) MINIMUM EDGE DISTANCE SHALL BE 1'–0 FROM EDGE OF DECK TO TOE OF BARRIER FOR DESIGN SPEEDS OF 62.4 MPH OR LESS. FOR LOWER DESIGN SPEEDS THIS DIMENSION MAY BE REDUCED. CONSULT MANUFACTURER.
4) SUGGESTED ADHESIVE SHALL BE HILTI HIT–RE–500 OR HIT–HY 150 OR EQUAL.

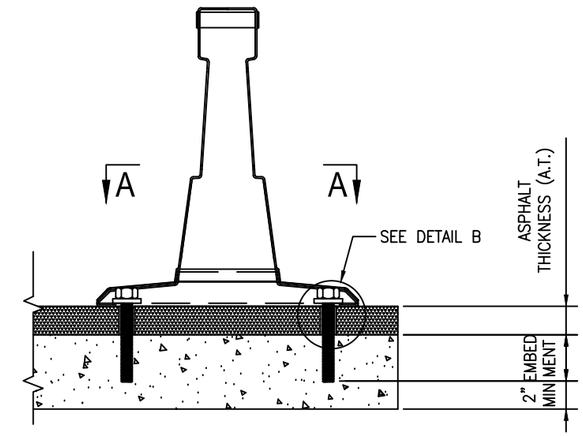

TYPICAL CONCRETE WITH ASPHALT WEARING SURFACE ANCHORING DETAIL

ANCHOR DIMENSIONS			
ANCHOR DIAMETER	ANCHOR LENGTH	EMBEDMENT	MIN. DECK THICKNESS
$1\frac{1}{4}$"	0'–9" + A.T.	6"	8" + A.T.
$\frac{7}{8}$"	0'–7" + A.T.	4"	6" + A.T.

CONCRETE WITH ASPHALT WEARING SURFACE ANCHORING NOTES

1) FOR QUANTITY AND LOCATION OF ANCHORS SEE SHEET 2.
2) ANCHOR MATERIAL SHALL BE THREADED ROD PER ASTM F1554 GR55. PIPE MATERIAL SHALL BE ASTM A53.
3) MINIMUM EDGE DISTANCE SHALL BE 1'–0 FROM EDGE OF DECK TO TOE OF BARRIER FOR DESIGN SPEEDS OF 62.4 MPH OR LESS. FOR LOWER DESIGN SPEEDS THIS DIMENSION MAY BE REDUCED. CONSULT MANUFACTURER.
4) SUGGESTED ADHESIVE SHALL BE HILTI HIT–RE–500 OR HIT–HY 150 OR EQUAL.

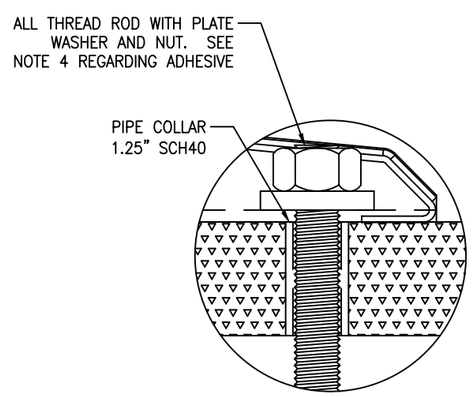

DETAIL B

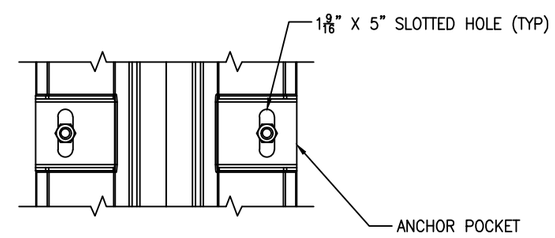

SECTION A-A

2 / 22 / 2013

COMMONWEALTH OF PENNSYLVANIA
REGISTERED PROFESSIONAL
JAMES N. WILKERSON
ENGINEER
No. 79293

REV	REMARKS	DATE	CHK

DRAWN BY	DATE	MATERIAL
GL	JAN 2013	–
SCALE	FINISH	WEIGHT
NONE	–	–

Description

ZONEGUARD PORTABLE STEEL BARRIER CONNECTION AND ANCHORING DETAILS

UNCONTROLLED WHEN PRINTED

HILL & SMITH INC.
1000 BUCKEYE PARK ROAD
COLUMBUS, OHIO 43207
(614)–340–6294
www.hillandsmith.com

PennDOT Drawing No.

12–602–BDTD, SHT. 3 OF 7

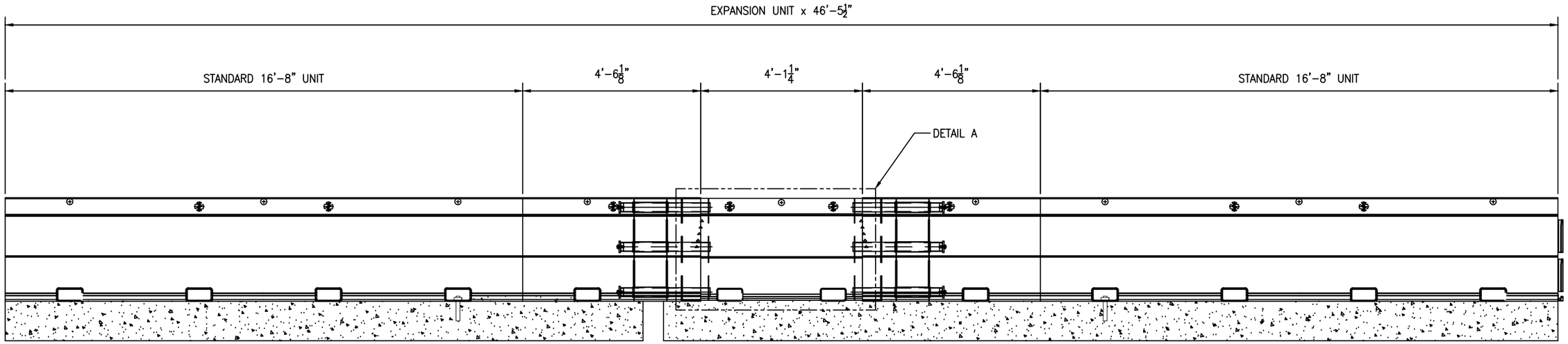

BRIDGE DECK EXPANSION JOINT

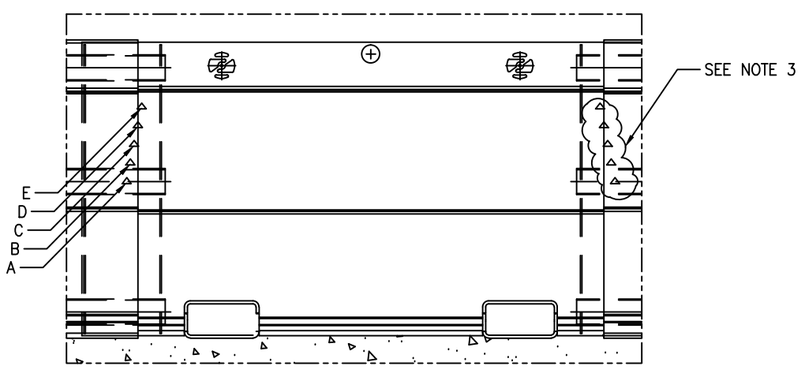

DETAIL A

EXPANSION NOTES:

1) ANCHOR EXPANSION UNIT ON BOTH SIDES OF THE EXPANSION JOINT AS SHOWN
2) UNIT ALLOWS FOR +/- 5" OF MOVEMENT.
3) ADJUST THE EXPANSION UNIT BY PULLING OUT OR PUSHING IN SO THAT THE MARKINGS FROM THE CHART SHOWN CORRESPOND WITH THE TEMPERATURE AT THE TIME OF INSTALLATION

EXPANSION JOINT-TEMPERATURE ADJUSTMENT	
MARK	MEASURED TEMPERATURE (°F).
A	< -10
B	-10 TO 16
C	17 TO 41
D	42 TO 93
E	> 93

2 / 22 / 2013

COMMONWEALTH OF PENNSYLVANIA
REGISTERED PROFESSIONAL
JAMES N. WILKERSON
ENGINEER
No. 79293

REV	REMARKS	DATE	CHK

DRAWN BY	DATE	MATERIAL
GL	JAN 2013	–
SCALE	FINISH	WEIGHT
NONE	–	–

Description
ZONEGUARD PORTABLE STEEL BARRIER EXPANSION UNIT DETAILS

UNCONTROLLED WHEN PRINTED

HILL & SMITH INC.
1000 BUCKEYE PARK ROAD
COLUMBUS, OHIO 43207
(614)-340-6294
www.hillandsmith.com

PennDOT Drawing No.
12-602-BDTD, SHT. 4 OF 7

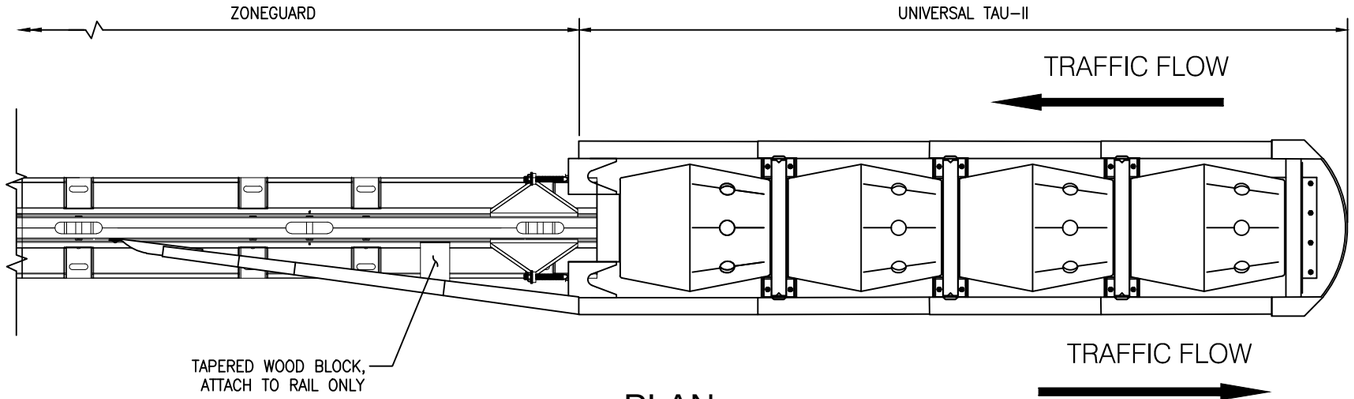

PLAN

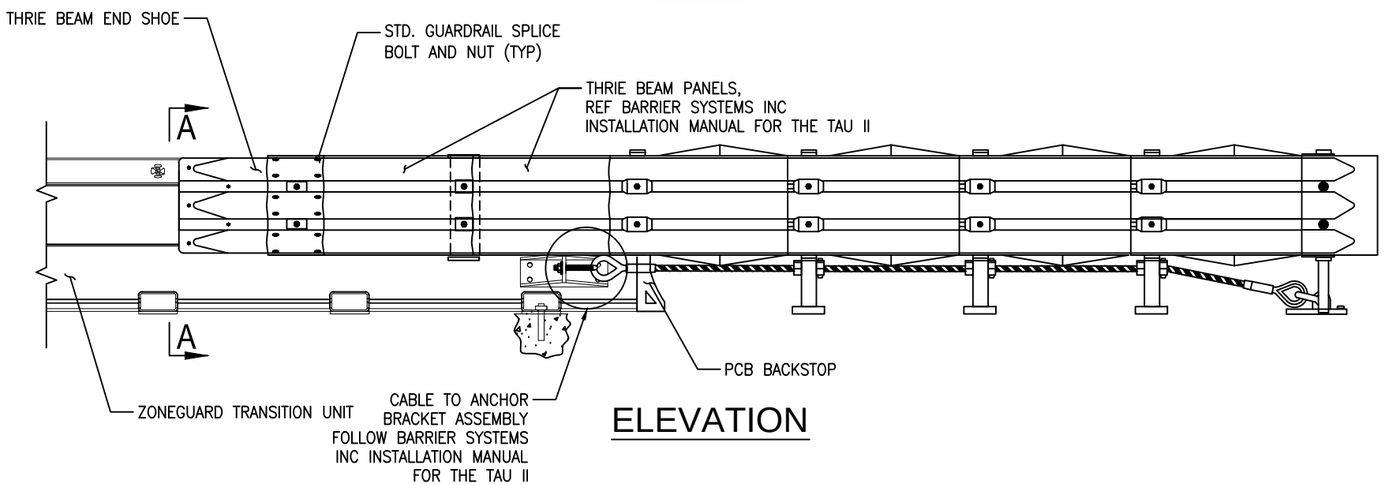

ELEVATION

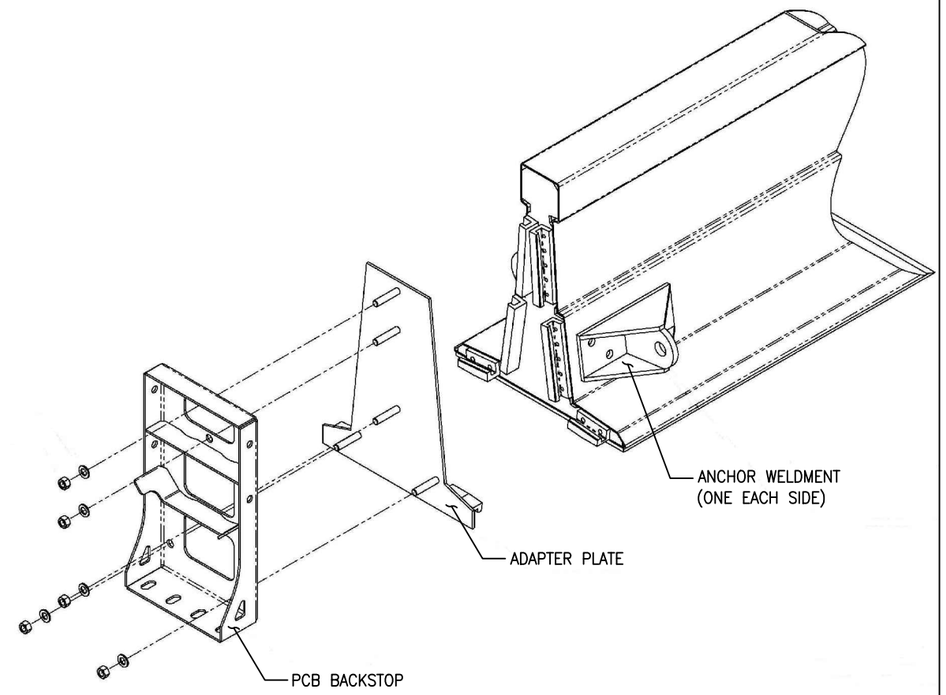

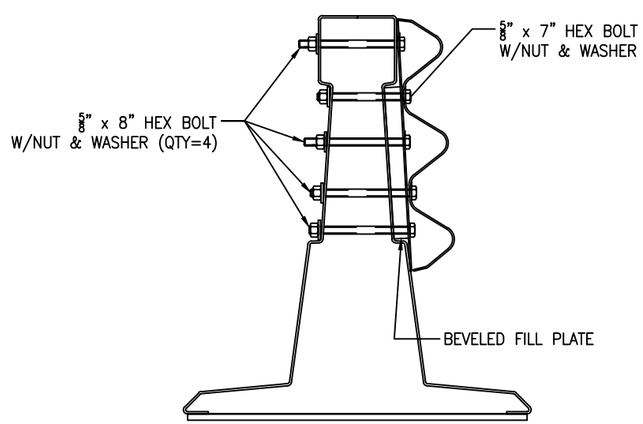

SECTION A-A

GENERAL NOTES:

1) THE UNIVERSAL TAU II CRASH CUSHION IS MANUFACTURED BY BARRIER SYSTEMS, INC. CONTACT INFORMATION CAN BE FOUND AT WWW.BARRIERSYSTEMSINC.COM.
2) TRANSITION PANELS ARE ONLY REQUIRED ON THE COUNTER FLOW TRAFFIC SIDE, I.E. THE SIDE WHERE THE CRASH CUSHION IS DOWN STREAM OF TRAFFIC FLOW.
3) FOR UNIDIRECTIONAL TRAFFIC ON BOTH SIDES, NO TRANSITION PANELS ARE REQUIRED.

INSTALLATION PROCEDURE

1) ALIGN, PLACE & ANCHOR ZONEGUARD TRANSITION UNIT.
2) INSTALL AND ANCHOR UNIVERSAL TAU–II CRASH CUSHION PER MANUFACTURERS INSTRUCTIONS.
3) INSTALL TRANSITION PANELS IF REQUIRED.
4) INSTALL STANDARD 50'–0 ZONEGUARD UNITS, PER DRAWING E–1000–1 OR E–1001–2

2 / 22 / 2013

COMMONWEALTH OF PENNSYLVANIA
REGISTERED PROFESSIONAL
JAMES N. WILKERSON
ENGINEER
No. 79293

REV	REMARKS	DATE	CHK

DRAWN BY	DATE	MATERIAL
GL	JAN 2013	–
SCALE	FINISH	WEIGHT
NONE	–	–

Description
ZONEGUARD PORTABLE STEEL BARRIER TRANSITION TO UNIVERSAL TAU–II CRASH CUSHION

UNCONTROLLED WHEN PRINTED

HILL & SMITH INC.
1000 BUCKEYE PARK ROAD
COLUMBUS, OHIO 43207
(614)–340–6294
www.hillandsmith.com

PennDOT Drawing No.
12–602–BDTD, SHT. 5 OF 7

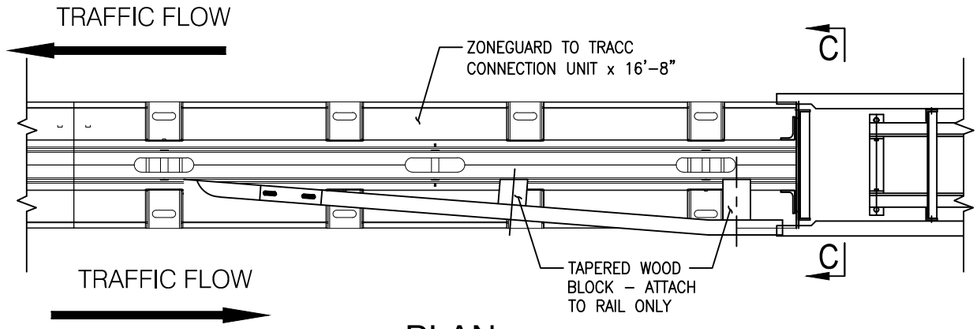

PLAN

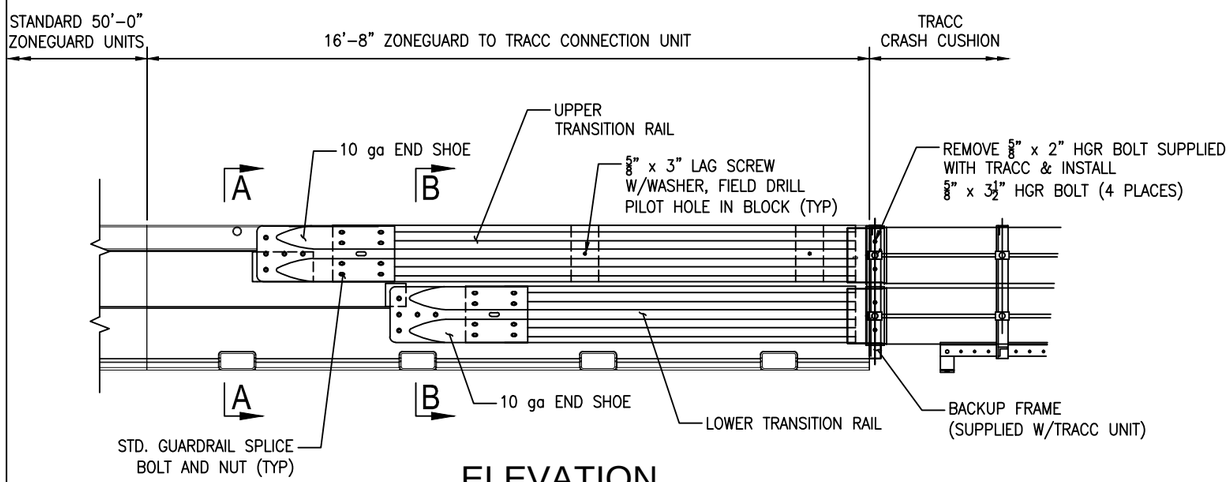

ELEVATION

INSTALLATION PROCEDURE

1) ALIGN, INSTALL & ANCHOR 16'-8" ZONEGUARD TRANSITION UNIT PER DRAWING E-1000-1. 4 ANCHORS ARE REQUIRED AT END OF ZONEGUARD TRANSITION UNIT, IRRESPECTIVE OF ZONEGUARD SYSTEM TYPE.
2) INSTALL TRACC CRASH CUSHION PER MANUFACTURERS INSTRUCTIONS.
3) INSTALL TRANSITION PIECES AS SHOWN.
4) INSTALL STANDARD 50' ZONEGUARD UNITS.

GENERAL NOTES:

1) THE TRACC CRASH CUSHION IS MANUFACTURED BY TRINITY INDUSTRIES, 2525 STEMMONS FREEWAY, DALLAS, TX 75207
2) TRANSITION TO TRACC IS ONLY REQUIRED ON THE COUNTER FLOW TRAFFIC SIDE, I.E. THE SIDE WHERE THE CRASH CUSHION IS DOWN STREAM OF TRAFFIC FLOW.
3) FOR UNIDIRECTIONAL TRAFFIC, CONNECT THE TRACC BACKUP FRAME TO THE ZONEGUARD TRANSITION UNIT USING THE (4) TRANSITION ADAPTER PLATES ONLY. NO OTHER PARTS ARE REQUIRED.
4) FOR ANCHORING LOCATIONS REFER TO SHEET 2.

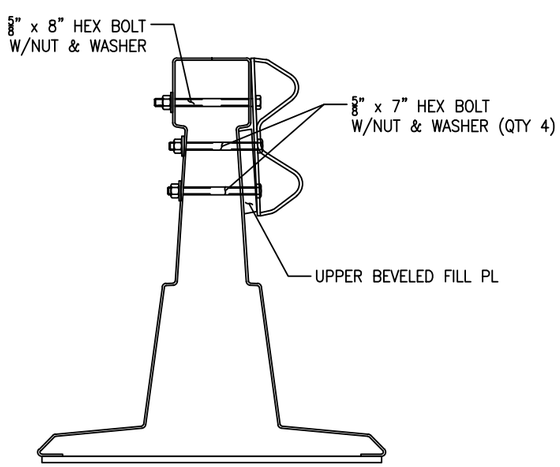

SECTION A-A

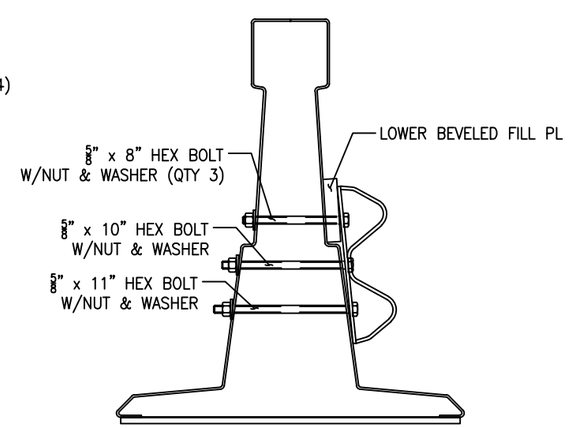

SECTION B-B

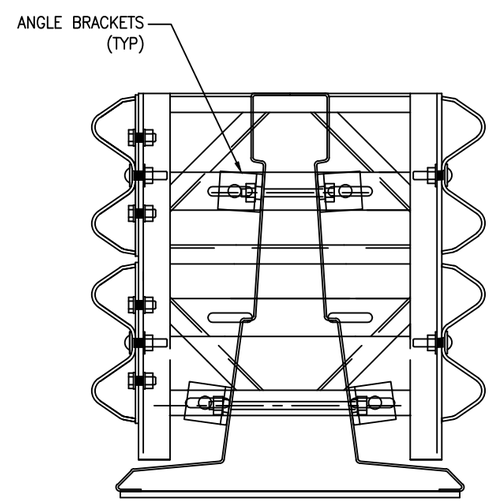

SECTION C-C

2 / 22 / 2013

COMMONWEALTH OF PENNSYLVANIA
REGISTERED PROFESSIONAL
JAMES N. WILKERSON
ENGINEER
No. 79293

REV	REMARKS	DATE	CHK

DRAWN BY	DATE	MATERIAL
GL	JAN 2013	–
SCALE	FINISH	WEIGHT
NONE	–	–

Description
ZONEGUARD PORTABLE STEEL BARRIER TRANSITION TO TRACC CRASH CUSHION

UNCONTROLLED WHEN PRINTED

HILL & SMITH INC.
1000 BUCKEYE PARK ROAD
COLUMBUS, OHIO 43207
(614)-340-6294
www.hillandsmith.com

PennDOT Drawing No.
12-602-BDTD, SHT. 6 OF 7

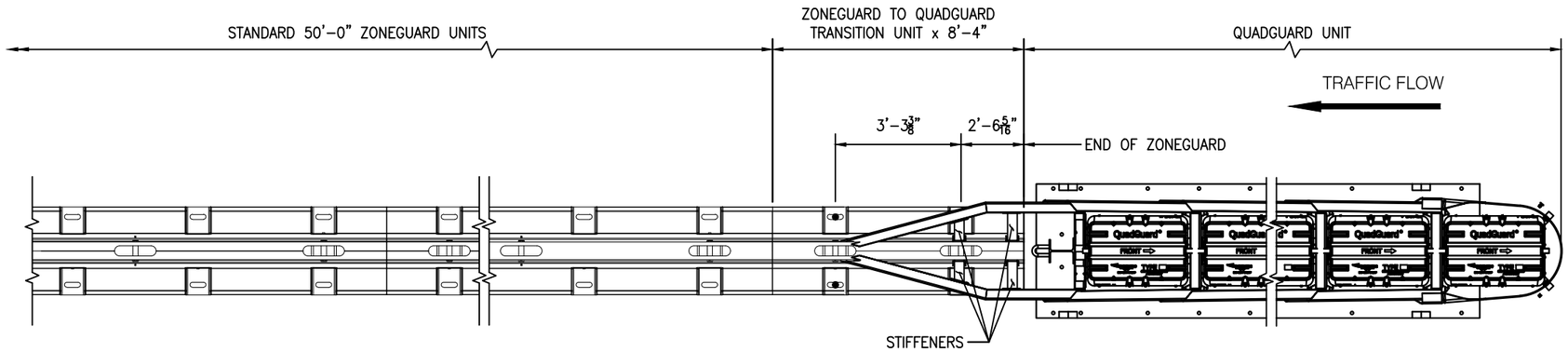

PLAN

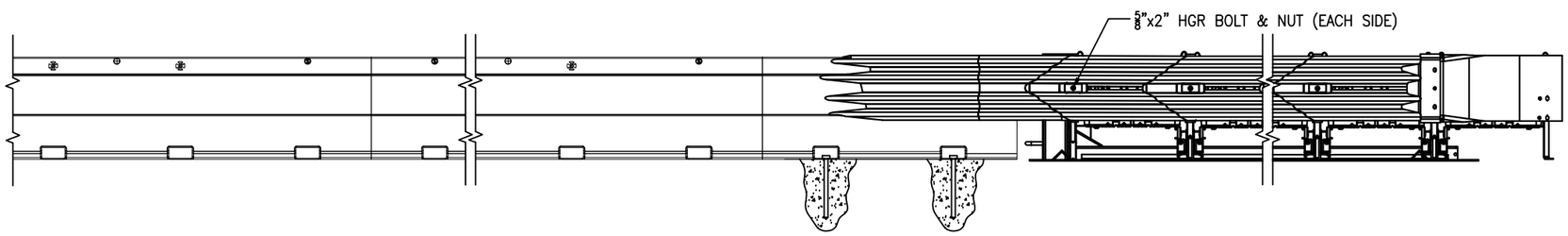

ELEVATION

GENERAL NOTES:

1) THE QUADGUARD CRASH CUSHION IS MANUFACTURED BY ENERGY ABSORPTION SYSTEMS, 35 E. WACKER DRIVE, CHICAGO, IL., 60601.
2) THE ZONEGUARD TO QUADGUARD TRANSITION UNIT IS A SINGLE UNIT WITH WELDED STIFFENERS AND TRANSITION PANELS. IT IS SYMMETRICAL, AND IS ONLY REQUIRED IN BI-DIRECTIONAL TRAFFIC FLOWS.
3) FOR UNIDIRECTIONAL TRAFFIC, NO CONNECTION TO QUADGUARD IS REQUIRED
4) REFERENCE SHEET 2 FOR ANCHORING AND INSTALLATION DETAILS ON STANDARD UNITS.
5) ZONEGUARD TO QUADGUARD TRANSITION UNIT IS A ONE PIECE UNIT WITH QUADBEAM PANELS WELDED TO EACH SIDE OF THE UNIT, AND GROUND FLUSH, THEN GALVANIZED.

INSTALLATION PROCEDURE

1) ALIGN, INSTALL & ANCHOR 8'-4" ZONEGUARD TRANSITION UNIT AS SHOWN.
2) INSTALL QUADGUARD CRASH CUSHION PER MANUFACTURERS INSTRUCTIONS.
3) CONNECT TRANSITION UNIT TO QUADGUARD USING (2) 5/8"x2" HGR BOLT AND NUT.
4) INSTALL STANDARD 50'-0 ZONEGUARD UNITS

2 / 22 / 2013

COMMONWEALTH OF PENNSYLVANIA
REGISTERED PROFESSIONAL
JAMES N. WILKERSON
ENGINEER
No. 79293

REV	REMARKS	DATE	CHK

DRAWN BY	DATE	MATERIAL
GL	JAN 2013	–
SCALE	**FINISH**	**WEIGHT**
NONE	–	–

Description

ZONEGUARD PORTABLE STEEL BARRIER TRANSITION TO QUADGUARD CRASH CUSHION

UNCONTROLLED WHEN PRINTED

HILL & SMITH INC.
1000 BUCKEYE PARK ROAD
COLUMBUS, OHIO 43207
(614)-340-6294
www.hillandsmith.com

PennDOT Drawing No.

12-602-BDTD, SHT. 7 OF 7

Product:

Precast Concrete Substructure Standards and Precast Structure Elements Guidelines
Central Atlantic Bridge Associates (CABA)
PennDOT Drawing # 12-603-BDTD

Approval Date:	**Initiated By SOL:**
March 18, 2013	483-13-03

Application/Use:

Precast Concrete Substructure Standards and Precast Structure Elements Guidelines developed by CABA have been approved for use in project development.

Precast Concrete Substructure Standards and Precast Structure Elements Guidelines usage has the following restrictions:

State or local projects.
Maximum precast pier column height is 50 feet.
Maximum precast pedestal height for beam seat is 18 inches.

These Precast Concrete Substructure Standards and Precast Structure Elements Guidelines meet both AASHTO and Design Manual, Part 4 design criteria.

Specifications:

Design/Material/Construction Specifications for this product are specified on PennDOT Drawing #12-603-BDTD dated on March 18, 2013 of Precast Concrete Substructure Standards and Precast Structure Elements Guidelines.

Comments:

The included Precast Concrete Substructure Standards and Precast Structure Elements Guidelines were developed from Utah DOT standards.

PRECAST STRUCTURE ELEMENTS GUIDELINES

Central Atlantic Bridge Associates

TABLE OF CONTENTS

SECTION 1 – GENERAL INFORMATION	3
SECTION 2 – TYPICAL SUBSTRUCTURE ELEMENTS	6
SECTION 3 – USE OF TYPICAL DETAIL SHEETS	9
SECTION 4 – SHEET CHECKLIST	10
SECTION 5 – FOUNDATION TYPES	12
SECTION 6 – MILD REINFORCING AND CONCRETE PROPERITES	13
SECTION 7 – DESIGN	15
SECTION 8 – LIFTING DEVICES, HANDLING, AND STORAGE	18
SECTION 9 – VERTICAL ADJUSTMENT	19
SECTION 10 – GROUTED SPLICE COUPLERS	20
SECTION 11 – CLOSURE POURS	22
SECTION 12 – TOLERANCES	23
SECTION 13 – ASSEMBLY PLANS	24

Section 1

GENERAL INFORMATION

The purpose of this manual is to provide guidance with the design and detailing of Precast Concrete Structure Elements according to PennDOT DM-4 and AASHTO LRFD Bridge Design Specifications except as noted otherwise.

Substructures are the portions of the bridge generally located between the superstructure (beams and deck) and the foundation (supporting soil, piles, or drilled shafts). Geotechnical design, pile design, and detailing are not considered substructures and are not covered in this portion of the manual.

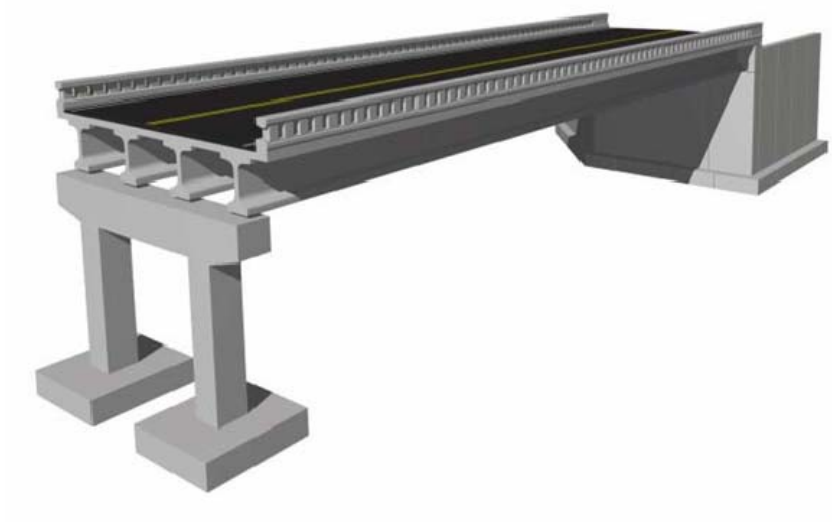

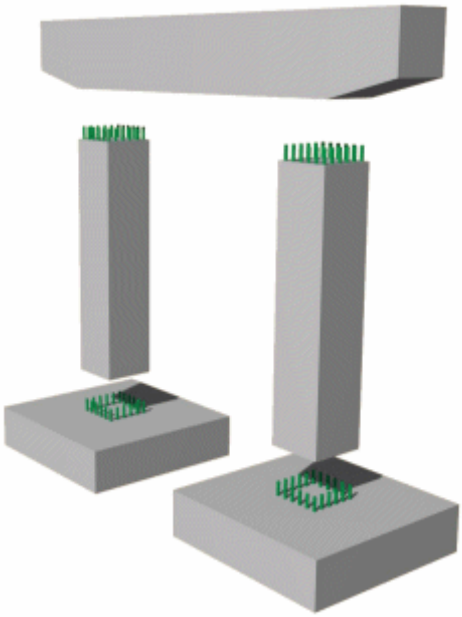

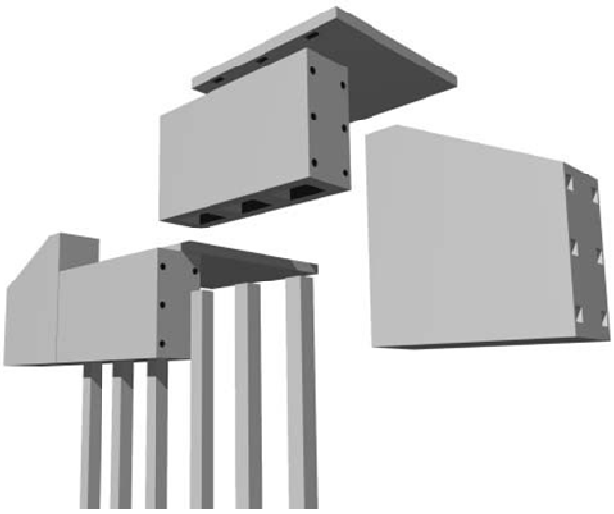

(Illustrations courtesy PCI Northeast – used with permission)

The Precast Substructure details sheet will normally contain, but is not limited to, the following listed details:

1. Plan View of each substructure unit
2. Elevation View of each substructure unit
3. Typical Transverse Sections as needed
4. Individual piece plans, elevations, and sections showing
    a. Dimensions
    b. Internal reinforcing details including grouted splice couplers
    c. Lifting points
    d. Approximate shipping weight of the piece
5. Connection details including grouted reinforcing splice couplers
6. Tolerance details for all applicable pieces
7. Bar Details
8. Table of Estimated Quantities

Show the following dimensions on the Precast Substructure Detail Sheet as listed below:

Structural dimensions: Draw all views and details in feet and inches to the nearest ⅛ inch.

Reinforcing steel: Show reinforcement dimensions and locations in all views including bar details in feet and inches to the nearest ¼ inch. All measurements are to the centerline of the reinforcements.

Cover: Show cover for substructure elements with 3 inch clear cover for bottom mats of reinforcement for footings and 2 inch clear cover for other substructure elements.

Angles: Show in degrees, minutes, seconds to the nearest whole second if such precision is available.

References: The Designer will verify that all requirements of the current PennDOT DM-4 and AASHTO LRFD Bridge Design Specifications and current interim provisions are satisfied and properly detailed in any documents intended or provided for construction.

Section 2

TYPICAL SUBSTRUCTURE ELEMENTS

The typical detail show several types of substructure types. They include:

1. Pier Bents
2. Integral Abutments
3. Semi-integral Abutments
4. Cantilever Abutments
5. Cantilever Walls

Other substructure types are not shown. It is possible to use the details depicted to design other structures. For instance, precast wall piers can be developed using the details for cantilever abutments.

Element Sizes:
The size of precast concrete substructure elements can become an issue for elements that need to be shipped long distances. Element transportation and erection should be investigated during the TS&L study. Use the following general guidelines for sizing precast concrete substructure elements:

Width: Keep the narrowest width of the element and any projecting reinforcing below 12 feet. This is to keep the shipping costs reasonable. Widths over 12 feet will require investigation. 14 feet is the maximum width.

Weight: Keep the maximum weight of each element to less than 100,000 pounds in order to keep the size of site cranes reasonable. In some cases the element weight should be limited to the maximum beam weight on the project. Weights above 50 tons will require investigation.

Height: Keep the maximum height of any element including any projecting reinforcing to less than 8 feet so the element can be transported below existing bridges. Element heights above 8 feet will require investigation.

Follow these limits for design-bid-build projects. The limits can be increased for design-build projects. The designer can work with both the fabricator and contractor to size the elements based on the available equipment and the proposed shipping routes.

Typical Elements:
The following sections briefly describe each type of substructure element shown in the typical detail drawings.

Columns: The use square shaped pier columns is preferred. Columns with flat surfaces can be cast in the horizontal position. Square columns can be formed with one facet left open. The concrete can be poured

through the open facet and finished along that face. This approach allows fabricators to build long forms and cast multiple columns at one time.

Pier Caps: There are several different types of pier cap beams depicted in the typical details. The only architectural treatment shown is for the underside of the cantilever ends. A 1 x 4 foot chamfer is shown. This is not required but it can have a significant effect on the appearance of the pier. Pier caps can be designed with mild reinforcement, prestressed concrete or even horizontal post tensioning.

Show pier bents as single, double, or triple column bents. The intent is to use combinations of these to make up any particular pier. The designer can choose to use two independent double column pier bents if four columns are required in a pier. Detail an open joint between the bents. The designer can detail extended reinforcing with a closure pour to connect the two bent caps if there is a need to connect them. This should not delay construction as long as the connection is not required for dead loads.

The pier cap details show the top of the cap in the transverse direction. This facilitates the connection of the column to the cap. It is best to keep this connection perpendicular in order to simplify the fabrication and avoid fit-up problems in the field. The top of the bents can be stepped at the joint if the pier is wide and made up of multiple un-connected bent caps. Slope the bent cap for severe cross slopes or aesthetic considerations but avoid doing so if possible.

Wall Stems: There are several different types of wall stems shown in the typical detail drawings. These include:

1. Cantilever abutment wall stems
2. Cantilever retaining wall stems
3. Integral abutment stems
4. Backwalls and cheekwalls

All of these elements are similar in that they are rectangular. Precast concrete wall stems can get very heavy, especially abutment stems. Several of the elements show voids cast into them. This is done in the case of the integral abutment to allow for a simple connection to the deep foundation. This is done in the case of the cantilever abutment to reduce shipping and handling weight. The concrete in the void area is placed after the element is erected. This concrete is not normally required for strength. It can be cured in place as the erection of the remainder of the bridge progresses.

The abutment details depict a top surface that follow the cross slope of the roadway in a series of steps. These stepped seats are shown with variable height precast beam seats to provide the beam seat elevations required. Beam seats can be cast high, allowing the contactor to grind to

final elevation after erection. The designer can decide whether the stepped abutment tops are required. This will vary from bridge to bridge based on the roadway cross slope, abutment skew, and grade. The abutment top can be kept level and constant on some bridges.

Aesthetic Treatment:

The details depicted in the typical detail sheets do not depict aesthetic treatments. Accelerated construction is not limited to typical bridge elements. It is possible to build aesthetic designs in an accelerated manner. Precast elements can enhance esthetic treatment options. The high quality of precast elements can produce high quality aesthetic treatments. Designers are encouraged to investigate architectural treatments in the PCI manual entitled Architectural Precast Concrete.

Section 3

USE OF TYPICAL DETAIL SHEETS

The drawings developed by CABA represent typical details for the design of precast concrete substructures. The details are not standards that can be inserted into project plans. The designer is responsible for the design and detailing of the specific substructure unit using the typical detail sheets for guidance on general concepts and consistent detailing practices.

These sheets were developed to provide an example of the drafting layout of typical precast substructure units. Several different substructure unit types are shown. There are only a few dimensions shown as suggestions for typical detailing. Reinforcing shown is also not standard. The designers will develop reinforcing size, spacing, and patterns for each bridge.

The details will cover the majority of typical substructures used in Pennsylvania. Complex bridges may require different substructure types. Designers are encouraged to use the typical details as a basis for the design of these complex substructures.

Section 4

SHEET CHECKLIST

Plan View

Accurate, measurable detail, with exceptions to enhance clarity

1. Label and locate the control line at each substructure unit. Match the terminology on the layout, such as reference line, centerline, or profile grade line.
2. Show abutment numbers, bent number, or both.
3. Reference control dimensions at all working points. These are usually the intersection of the control line and the centerlines of bents and abutments.
4. Overall dimensions of each substructure unit.
5. Beam lines located and numbered.
6. Skew angles.
7. Label joint locations and type.
8. Design data.

Elevation View

Accurate, measurable detail, with exceptions to enhance clarity

1. Elevations necessary to establish the grade of the substructure.
2. Elevations of all beam seats to the nearest $^{1}/_{16}$ inch.
3. Joint spacing
4. Joint types

Typical Transverse Sections

Accurate, measurable detail, with exceptions to enhance clarity

1. Piece width dimensioned
2. Control line or centerline of bearing (if applicable)
3. Typical section reinforcing.
4. Reinforcing cover.

Individual Piece Details

Accurate, measurable details, with exceptions to enhance clarity

1. Overall dimensions
2. Locations and sizes of blockouts and voids
3. Locations of inserts
4. Internal reinforcing details including locations of grouted splice couplers
5. Lifting Points
6. Approximate shipping weight of each piece

Other Details

Accurate, measurable details, with exceptions to enhance clarity

1. Connection details including grouted splice couplers
2. Joint details
3. Installation notes
4. Tolerance details for all applicable pieces
5. Bar Details
6. Table of Estimated Quantities
7. General notes including but not limited to, design criteria, loading, class of concrete, epoxy coating or galvanization, and cross references to various standard sheets
8. Title block, information block, and Engineer's seal

Final Checks

1. Comply with PennDOT CADD Detailing Standards.
2. Check all details and dimensions against substructure to ensure the details are not in conflict.
3. Double check bars in various details against the bars shown in the bar table.
4. Check that the name and number of the bridge is same on all detail sheets, including layout.
5. Initial the sheet after back-checking corrected details.

Section 5

FOUNDATION TYPES

PennDOT requires foundations up to 5 feet above the normal ground to be cast in place. Never-the-less, for local bridges, typical precast details were developed for several different foundations types. They are as follows:

1. Spread footing on soil
   Place footings on soil with a nominal gap between the underside of the footing and the substrate. Place the footing on temporary leveling devices and set to grade. Fill the void between the precast footing and the substrate with flowable bedding concrete.
2. Spread footing on bedrock
   Place footings on rock with a nominal gap between the underside of the footing and the bedrock. Blasted bedrock is often a very rough surface. Add notes to the plans to allow for installation of a bedding concrete sub-footing. This concrete only needs to be strong enough to support the anticipated soil bearing pressures. Place the footing on temporary leveling devices and set to grade. Fill the footing gap with flowable bedding concrete to make the connection to the substrate.
3. Footings on drilled shafts or pipe piles
   Drilled shafts and pipe piles both have reinforcing extending from the pile or shaft into the footing. Details have been developed from work done in other states. Use a corrugated metal pipe to form voids in the substructure element. The corrugations transfer the pile load into the substructure elements.
4. Footings on driven H-piles
   The details for driven H piles are similar to the pipe piles. Install welded shear connectors on the webs of the pile in order to improve the transfer of force from the pile to the cap.

Section 6

MILD REINFORCING AND CONCRETE PROPERTIES

Mild Reinforcement:
Coat all mild reinforcement according to PennDOT specifications. Coat all grouted splice couplers with epoxy coating. The coating on the bars within the couplers does not need to be removed to make the connection.

Special requirements for columns:

The grouted reinforcing slice coupler is the only connector allowed between the column and adjacent elements. Couplers will develop the minimum specified tensile strength of the attached reinforcing bars. See Section 8 for more information on grouted splice couplers.

Reinforcement will not have lap splices within the column. Specify and detail grouted reinforcing splice coupler within the element on the plans if splicing is required.

Shear reinforcement for columns can be either of the following:

1. Closed loop stirrups as shown on BD 629 sheet 4 of 15 Section A-A for Seismic Zone 1.
2. Spiral reinforcing at the ends of columns. Properly anchor the spiral end to the column core as specified in the AASHTO LRFD Bridge Design Specifications.

Other precast elements:
Allow lap splices in closure pours between elements that are not columns. Use threaded mechanical couples for bars that extend beyond the edges of the precast element, except for columns. Do not weld reinforcement.

Concrete Properties:
Nominal 28-day concrete strength (f'c) for precast substructure elements is 5,000 psi. Specify this strength at a higher level with prior PennDOT approval where higher strengths are required. Specify the final designed concrete strength required on the plans.

Closure pour concrete is a high early strength mix that is developed and submitted by the contractor. The mix will be air entrained and have shrinkage compensating admixtures to prevent cracking and separation of the closure pour concrete from the adjacent precast concrete. The properties are as follows:

6 Hour strength of 2,500 psi
7 Day Strength of 5,000 psi

Flowable bedding concrete is used to seat elements on top of the subgrade. PennDOT standard flowable fill is used for this purpose.

Section 7

DESIGN

Design of Precast Elements:

The details for precast substructure elements are based on a design process called emulative detailing. This is a process developed by joint committee of the American Concrete Institute (ACI) and the American Society of Civil Engineers (ASCE). The process is documented in the publication entitled "ACI 550.1 - Emulating Cast-in-place detailing in Precast Concrete Structures".

This process emulates cast-in-place connections with precast elements. Conventional cast-in-place (CIP) construction is not monolithic. Construction joints are common. CIP construction joints are typically detailed with dowels and lap splices with the exception of column connections. Emulation design replaces the traditional lap splice with a mechanical coupler. These couplers are allowed by the AASHTO LRFD Design Specifications. AASHTO requires that the couplers develop 125 percent of the specified yield strength of the connected bar. This is more than adequate in most cases for use in connection emulation such as abutments and walls. The one exception is column connections in high seismic zones.

Use grouted splice couplers in connection emulation details for accelerated bridge construction based on the following:

1. Three companies make similar products.
2. The companies have been in the vertical construction market for over 25 years.
3. They can easily meet the AASHTO requirements for mechanical connectors.
4. They can develop the specified tensile strength of the bars.
5. They can easily be cast into precast elements

The design of column connections is especially difficult for high seismic zones. These connections develop plastic hinges to dissipate the seismic forces on the structure. There are no prefabricated bridge connections tested in the United States for plastic hinging to date.

Grouted splice couplers have been researched in Japan. The following tables show the results of two tests. The first plot shows the performance of a column with grouted splice couplers. The second shows a column with continuous mild reinforcement. The testing was done to show the hysteretic behavior of the connectors. An axial load of 0.2*BDF'c was applied and the column was loaded laterally to various levels and repeated to develop the hysteresis plots.

Table 1
Test data for Grouted Splice Couplers in Plastic Hinge Zone

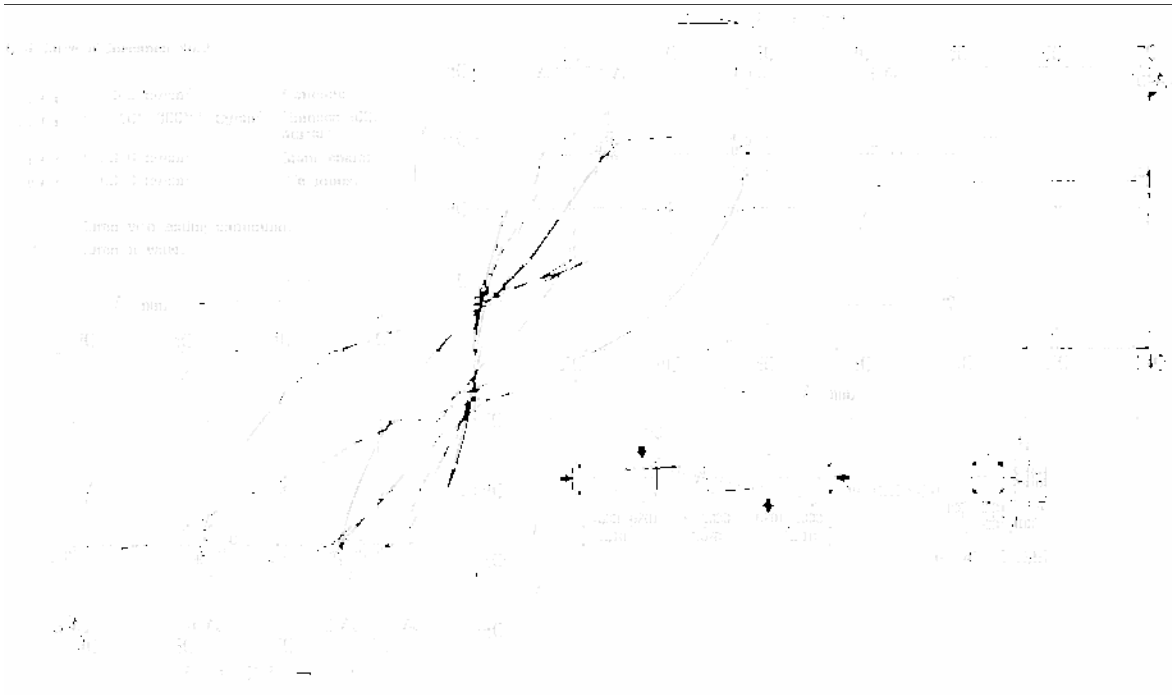

Table 2
Test data for Continuous Reinforcement in Plastic Hinge Zone

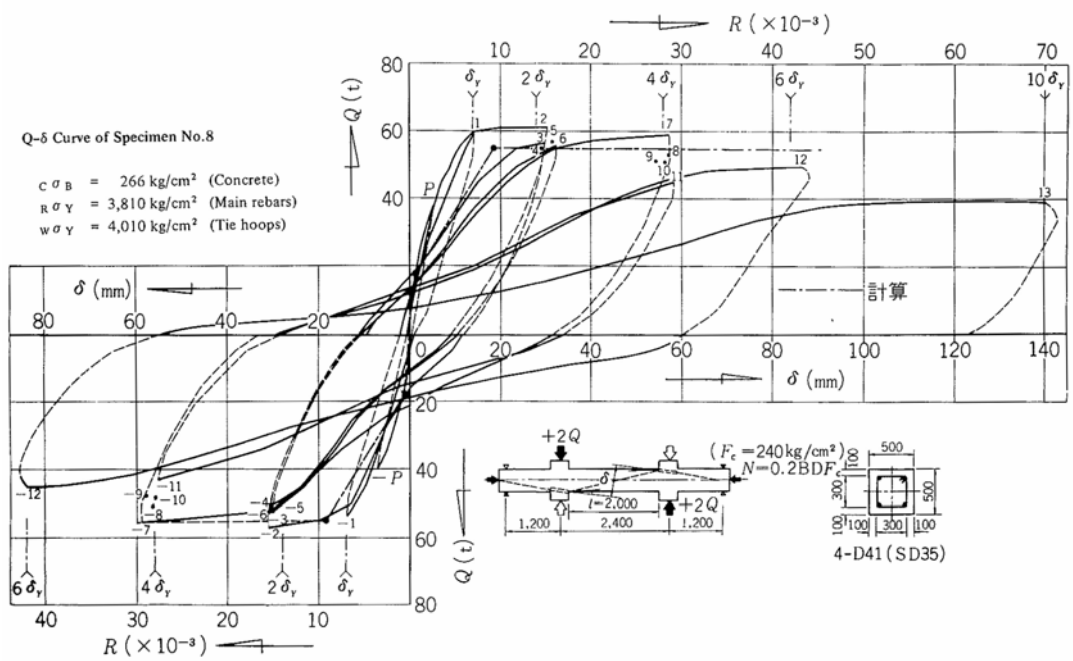

The loading was as follows:

1. One cycle to 1.0*σy
2. Five cycles to 2.0*σy

3. Four cycles to 4.0*σy
4. One cycle to 6.0*σy
5. One cycle to 10.0*σy

A review of the plots shows that the behavior of the grouted splice couplers is almost identical to the behavior of a continuous mild reinforcing column. The coupler showed slightly lower drop off-of moment capacity at the higher ductility ratios.

These connections are currently allowed in high seismic zones in the United States for vertical construction such as buildings. The Seismic section of the current ACI 318 code classifies these connections as "Type 2" Mechanical Connectors. The ACI code specifies that these connectors are required to develop 100 percent of the specified tensile strength of the connected bar. Designers are encouraged to review the ACI code provisions.

Column Confinement:
Confinement of column reinforcing is possible with precast concrete elements. The AASHTO design specifications do not mandate the confinement reinforcing bars be continuous from the column into the adjacent members footing or cap. The confinement reinforcing can be ended in the column and separate confinement reinforcement can be added to the adjacent element. The following types of confinement reinforcement can be used in precast construction:

Spirals: Spiral reinforcement can be used. It is important to anchor the spiral into the column core at the base of the column. Refer to the AASHTO Guide Specification for Seismic Design provisions for anchoring spirals.

Closed loop stirrups: Closed loop stirrups are permitted.

The commentary in the AASHTO LRFD specifications offers some guidance on the use of individual hoops or ties when compared to spirals. The AASHTO LRFD commentary includes the following information about advantages of seismic hoops over spirals:

1. Improved constructability when the transverse reinforcement cage must extend up into a bent cap or down into a footing. Seismic hoops can be used at the top and bottom of the column in combination with spirals or full height of the column in place of spirals.
2. Ability to sample and perform destructive testing of in-situ splices prior to assembly.
3. Breakage at a single location versus potential unwinding and plastic hinge failure.

Section 8

LIFTING DEVICES, HANDLING, AND STORAGE

Lifting devices:
Create design plans that show recommended lifting locations based on the design of the element. The Engineer is responsible for checking the handling stresses in the element for the lifting locations shown on the plans. Design the elements using the criteria of Chapter 8 of the PCI Design Handbook – MNL-120:

1. Use two point picks for columns, pier caps, and wall panels, similar to prestressed beams.
2. Use an eight-point pick if element stresses are excessive with a four-point pick. Add notes to the plan requiring specialized rigging that includes pulleys.
3. Use a dynamic load allowance of 15 percent.
4. Do not show specific lifting hardware on the drawings. The Engineer will verify that at least one lifting hardware manufacturer can provide a device that can resist the anticipated loads. The Engineer will consider reducing the size of the panel or switch to a more sophisticated lifting system if no manufacturer can meet the required resistance. The Engineer will consult with fabricators for these situations.

The Contractor may choose alternate lifting locations with approval from the Engineer. The Contractor will provide the spacing and location of the lifting devices and submit plan and handling stress calculations to the Engineer for approval prior to construction of panel.

Handling and Storage:
The Contractor is responsible for the handling and storage of substructure elements in such a manner that does not cause undue stress on the element. Submit a handling and storage plan to the Engineer for review prior to the construction of any element.

The Engineer will inspect all elements and reject any defective elements. The rejected elements will be replaced at the Contractor's expense. The Contractor is responsible for any schedule delays due to rejected elements.

Section 9

VERTICAL ADJUSTMENT

Vertical Adjustment Devices:
Use vertical adjustment devices to provide grade adjustment to meet the elevation tolerances shown on the substructure elevation plans. Pier columns and pier cap elevations can be adjusted with shim stacks contained in the grouted joints.

The plans show typical devices and alternate devices that may be used with Engineer's approval.

Leveling bolts will be pre-adjusted to approximate required final elevation for the element. Each adjustment device will have a capacity of at least 100 percent more than the tributary weight on the device. Designer will detail the type and locations of the devices.

Significant torque may be required to adjust the leveling bolts for substructure elements. The following is a recommended procedure for adjusting the grade of large footings:

1. Pre-adjust the device to provide the specified elevation.
2. Set the element on the leveling devices but do not fully release the element from the crane. This will greatly limit the amount of force on the leveling bolts.
3. Adjust the element grade while it is still partially supported by the crane.
4. Release the element from the crane once the grade is established.

Section 10

GROUTED SPLICE COUPLERS

Design requirements:
The design of precast elements is based on emulative detailing as described in Section 7. Grouted splice couplers are designed to emulate a reinforced concrete construction joint. The coupler replaces the typical lap splice. The only effect this approach has on the design of the element is the location of the reinforcing steel. The coupler is larger than the connected bar so the reinforcing cage must be set deeper into the element in order to provide the proper cover at the couplers. This may require more reinforcement due to the reduced effective depth of the section.

Use grouted splice couplers as part of a 90-degree hook end. The coupler can be attached to the hooked bar end for example, if the coupler is used in a pier cap. The length of the coupler can be used as part of the hook bar dimension if this is done.

Seismic Detailing:
Grouted splice couplers can be used in plastic hinging zones. The standard requirements for column confinement still apply around the couplers. The diameter of the spiral will need to change at the coupler location if spiral confinement reinforcement is used due to the increased outside diameter of the coupler group. The diameter of the ties will also need to be increased at the couplers if individual ties are used.

Coupler Locations:
Grouted splice couplers can be used in different configurations. The typical detail sheets show two different configurations for vertical bar splices. The preferred configuration is to have the coupler located above the joint. This preference is based on the following:

1. There is less opportunity for the coupler to become contaminated with debris. Couplers located below the joint need to be sealed during fabrication and shipping.
2. Bar extensions at the bottom of element is required for the coupler located below the joint. This may make handling more difficult.

The benefit of having the couplers located at the top of a footing is that they are located outside the column hinge zone. They still need to develop the tensile strength of the bars. There is concern that coupler stiffness will shift the plastic hinge farther into the column. This can result in an increase in column shear. The testing results depicted in Table 1 and Table 2 do not indicate that this is an issue. The force required to develop the yield moments in a coupler connection is within 1 percent of the control sample without the couplers.

Size and Spacing of Couplers:
The grouted couplers are larger than the connected reinforcing. This can lead to problems with detailing in congested areas such as pier caps. Design the reinforcing bar size and couplers to allow for crossing reinforcing bar patterns.

Maximum Spacing: Detail for spacing that is close to the maximum bar spacing requirements in the AASHTO LRFD Bridge Design Specifications. Base the spacing on the connected bar.

Minimum Spacing: The AASHTO requirements for minimum bar spacing are, in part, based on the ability to place concrete properly between the bars. Do not use the diameter of the couplers in the calculations. Check the clear spacing between the couplers. Use the following approach:

Detail the minimum gap between the couplers to be the greatest of the following:

1. 1 inch
2. 1.33 * maximum aggregate size of the course aggregate
3. The nominal diameter of the connected bars

Clear Cover: The clear cover for the element is based on the cover over the coupler and the connected reinforcing. This requires the connected reinforcing to be placed slightly deeper into the element in order to obtain the cover over the couplers. Use the following dimensional guidelines for detailing of element with grouted splice couplers based on a review of the three manufacturers' that are currently supplying product:

Table 3

Bar Size	Outside Diameter (inches)	Length of Sleeve (inches)
4	2.625	14.125
5	3.000	14.125
6	3.000	14.125
7	3.000	18.75
8	3.500	18.75
9	3.500	18.75
10	3.500	23.5
11	4.000	23.5
14	4.000	28.375
18	4.500	39.625

Section 11

CLOSURE POURS

Use closure pours where needed as directed, designed, and detailed by the designer. Concrete compressive strength in the closure pour will be equal or greater than the precast elements (typically 5,000 psi). Designer will design and detail closure pours.

Designer will specify wet curing for at least 7 days to increase the durability of the closure pours.

Use mechanical couplers in conjunction with the continuous reinforcement in the connected elements when required. All mechanical couplers will conform to AASHTO 5.11.5.2.2 and ACI 318 12.15.3 and meet all PennDOT requirements. Precast the couplers, if used, into the panel after securely attaching them to the continuous reinforcement.

Section 12

TOLERANCES

The tolerance of casting elements is critical to a successful installation. One of the most important tolerances is the location of the grouted splice couplers. Variation in coupler locations will lead to unacceptable misalignments at the coupler locations.

Make the tolerance measurements from a common working point or line in order to specify tolerances of critical elements. Center to center measurements can lead to a build-up of tolerance errors.

The typical detail drawings include details of recommended tolerances. Include these details in all precast substructure projects.

Dry fitting the elements is not necessary provided QA/QC procedures are followed. In the event that a grouted splice coupler is misaligned out of tolerance, and as-built computer models or templates or full scale models do not provide conclusive evidence that the members will join properly, PennDOT can request a dry fit for approval.

Section 13

ASSEMBLY PLANS

Most bridge construction projects require contractors to submit erection plans for bridge girders. Prefabricated substructures also require a level of pre-construction planning. Write project specifications to require that the contractor submit an assembly plan for the construction of the entire structure including the precast substructure.

Include as a minimum the following in the assembly plan:

1. Size and weights of all elements
2. Picking points of all elements
3. Sequence of erection
4. Temporary shoring and bracing
5. Grouting procedures
6. Location and types of cranes
7. A detailed timeline for the construction including time for curing grouts and closure pours

PRECAST CONCRETE SUBSTRUCTURES GENERAL NOTES

INTRODUCTION

THESE GUIDELINE DRAWINGS REPRESENT TYPICAL DETAILS FOR THE DESIGN AND DETAILING OF PRECAST CONCRETE SUBSTRUCTURES.

THESE SHEETS ARE INCLUDED TO PROVIDE AN EXAMPLE OF THE DRAFTING LAYOUT OF TYPICAL PRECAST CONCRETE SUBSTRUCTURES. SEVERAL DIFFERENT SUBSTRUCTURE TYPES ARE SHOWN. THE DETAILS WILL COVER A MAJORITY OF THE SUBSTRUCTURES USED IN PENNSYLVANIA.

DETAILS AND REINFORCEMENT SHOWN ARE SCHEMATIC. DESIGN AND DETAIL EACH SUBSTRUCTURE ACCORDING TO THE SPECIFIC REQUIREMENTS OF EACH BRIDGE.

SET THE LOCATION OF THE LONGITUDINAL REINFORCING STEEL BASED ON THE SIZE OF THE GROUTED SPLICE COUPLER, ANY REINFORCING STEEL AROUND THE COUPLER, AND THE CLEAR COVER REQUIREMENTS FOR THE ELEMENT. ACCOUNT FOR THIS IN THE DESIGN OF THE ELEMENT.

MATERIAL NOTES

PRECAST ELEMENT CONCRETE:
F'c = F'(28-DAY) = 5000 PSI AND AS SHOWN ON THE APPROVED SHOP DRAWINGS (HIGHER STRENGTH CONCRETES MAY BE REQUIRED BY DESIGN)

MINIMUM PRECAST ELEMENT STRIPPING STRENGTH:
F'(STR) = AS INDICATED ON THE APPROVED SHOP DRAWINGS

CLOSURE POUR CONCRETE:
F'c = 2,500 @ 6 HRS.
F'c = 5,000 @ 7 DAYS

FOOTING EXTENSION CONCRETE:
F'c = 5,000 PSI

NON-SHRINK GROUT:
F'c = 5,000 PSI @ 24 HRS.

SPLICE COUPLER:
NMB SPLIVE SLEEVE - TYPE 2 CONNECTION

SPLICE COUPLER GROUT:
SS MORTAR - f'c = 9,500 PSI

FLOWABLE BEDDING CONRETE:
PENNDOT STANDARD FLOWABLE BACKFILL

HIGHER CONCRETE STRENGTHS ARE ALLOWABLE WITH APPROVAL FROM THE DEPARTMENT.

REINFORCEMENT STEEL:

PROVIDE GRADE 60 DEFORMED REINFORCING STEEL BARS THAT MEET THE REQUIREMENTS OF ASTM A615, ASTM A996, OR A706. DO NOT WELD REINFORCEMENT BARS. DO NOT USE RAIL STEEL A996 IN BARRIERS OR WHERE BENDING OR WELDING OF REINFORCEMENT BARS IS INDICATED.

EPOXY COAT REINFORCEMENT BARS IN ACCORDANCE WITH DESIGN MANUAL 4.

PROVIDE MINIMUM LAP AND EMBEDMENT LENGTH FOR REINFORCING BARS IN ACCORDANCE WITH BC-736M.

FOR GROUTED SPLICE COUPLERS, ONLY PRE-APPROVED BULLETIN 15 COUPLERS WILL BE PERMITTED.

GALVANIZED REINFORCING STEEL BARS MAY BE SUBSTITUTED FOR EPOXY-COATED REINFORCING STEEL BARS AT NO ADDITIONAL COST TO THE DEPARTMENT. CHROMATE IN ACCORDANCE WITH ASTM A 767/A 767M AS SPECIFIED IN PUBLICATION 408/2011 SECTION 709.1(e)

ALL STRUCTURAL STEEL AND STEEL HARDWARE SHALL BE GALVANIZED AND CHROMATED.

PROVIDE STRUCTURAL STEEL CONFORMING TO AASHTO M 270/M 270M (ASTM A 709/A 709M) GRADE 36 DESIGNATION, EXCEPT WHEN NOTED OTHERWISE.

BOLTS: ASTM F1554, GRADE 55

NUTS: ASTM A563/ A 563M, GRADE DH

WASHERS: ASTM F436/ F436M, TYPE 1

SHIMS: PERMANENT PLASTIC SHIMS

DESIGN & CONTRACT DRAWING NOTES

IT IS THE DESIGNER'S RESPONSIBILITY TO:

DESIGN AND DETAIL ALL SUBSTRUCTURE ELEMENTS, INCLUDING BUT NOT LIMITED TO, COMPONENTS SUCH AS PIERS, ABUTMENTS, FOOTINGS AND FOUNDATIONS.

DETAIL DIMENSIONS OF ALL ELEMENTS INCLUDING INTERNAL REINFORCING.

CALCULATE ELEVATIONS OF TOP OF ALL PRECAST ELEMENTS. ELEVATIONS TO BE INCLUDED ON ALL DETAILS.

DETERMINE THE GEOTECHNICAL REQUIREMENTS OF THE SITE AND PLACE THE APPLICABLE INFORMATION ON THE PLANS.

PLACE APPLICABLE GENERAL NOTES ON THE PLAN SET.

ENSURE SUFFICIENT DETAIL IS ADDED TO THE DESIGN PLANS TO ENSURE PROPER FIT UP OF PRECAST ELEMENTS IN THE FIELD. TOLERANCE DETAIL SHEETS DEPICT A WORKING METHOD FOR ACHIEVING PROPER FIT UP.

CHECK THE HANDLING STRESSES IN EACH ELEMENT FOR THE LIFTING LOCATION SHOWN ON THE PLANS.

FOR DETERMINING THE MINIMUM SIZE OF THE CORRUGATED METAL PIPE FOR USE WITH THE SUBSTRUCTURE ELEMENTS USE THE FOLLOWING:

PIPE PILE: O.D. + 8"
H-PILE: PILE DIAGONAL + 8"

ALL REINFORCING STEEL DIMENSIONS ARE TO THE CENTERLINE OF THE REINFORCEMENT.

SIZES OF ELEMENTS:

WIDTH: THE MAXIMUM WIDTH OF THE ELEMENT AND ANY PROJECTING REINFORCING SHOULD BE KEPT BELOW 14 FT FOR SHIPPING REASONS

WEIGHT: THE MAXIMUM WEIGHT OF EACH ELEMENT SHOULD BE KEPT TO LESS THAN 100 KIP.

HEIGHT: THE MAXIMUM HEIGHT OF ANY ELEMENT INCLUDING PROJECTING REINFORCING SHOULD BE KEPT TO LESS THAN 10 FT FOR SHIPPING REASONS.

MAXIMUM PIER COLUMN HEIGHT IS 50 FEET.

MAXIMUM PEDESTAL HEIGHT IS 18 INCHES.

THE DESIGNER AND/OR CONTRACTOR SHALL SUBMIT, FOR EACH SIZE OF REINFORCEMENT BAR USED, THREE (3) REPRESENTATIVE SPLICE COUPLING SYSTEMS, EITHER SAMPLE OR ACTUAL, TO THE MATERIALS TESTING DIVISION AS PER PUBLICATION 408 SECTION 1002.3(e).

GENERAL NOTES

DESIGN SPECIFICATIONS:

AASHTO, LRFD BRIDGE DESIGN SPECIFICATIONS AND AS SUPPLEMENTED BY THE DESIGN MANUAL, PART 4, STRUCTURES.

DESIGN IS IN ACCORDANCE WITH THE LOAD AND RESISTANCE FACTOR DESIGN METHOD (LRFD).

CONSTRUCTION SPECIFICATIONS AND WORKMANSHIP:

PROVIDE MATERIALS AND PERFORM WORK IN ACCORDANCE WITH THE CURRENT VERSION OF THE PENNSYLVANIA DEPARTMENT OF TRANSPORTATION PUBLICATION 408, AASHTO/AWS/D1.5M/D1.5 2008 - BRIDGE WELDING CODE AND THE CONTRACT SPECIAL PROVISIONS. (USE AWS/D1.1M FOR WELDING NOT COVERED IN AASHTO/AWD/D1.5M/D1 2008)

WELDING OF REINFORCEMENT, ONLY WHERE SPECIFIED, IS TO BE IN ACCORDANCE WITH THE STRUCTURAL WELDING CODE, REINFORCING STEEL, AWS D1.4/D1.4M OF THE AMERICAN WELDING SOCIETY AND APPLICABLE SPECIAL PROVISIONS.

PROVIDE 2" CLEAR COVER FOR REINFORCING UNLESS NOTED OTHERWISE. PROVIDE 3" CLEAR COVER FOR TOP OF FOOTINGS AND 4" CLEAR COVER FOR BOTTOM OF FOOTINGS.

ALL DIMENSIONS ARE SHOWN HORIZONTAL, EXCEPT AS NOTED.

DIMENSIONS SHOWN ARE FOR A NORMAL TEMPERATURE OF 68 DEGREES F.

CONTRACTOR TO PROVIDE TEMPORARY BRACING FOR ALL ELEMENTS UNTIL CONNECTIONS HAVE ACHIEVED ADEQUATE STRENGTH. SUBMIT WORKING DRAWINGS IN ACCORDANCE WITH PUBLICATION 408 SECTION 105.02(c).

SHOW LIFTING LOCATIONS FOR ALL COMPONENTS. CONTRACTOR TO DESIGN THE LIFTING HARDWARE.

THE CONTRACTOR MAY SUBSTITUTE ALTERNATE LEVELING DEVICES PROVIDED THEY CAN PRODUCE A STRUCTURE WITHIN THE SPECIFIED ERECTION TOLERANCES.

USE A TROWEL FINISH ON THE TOP SURFACES OF ALL PRECAST ELEMENTS.

CHAMFER ALL EXPOSED CONCRETE EDGES 1" X 1".

SHOW ESTIMATED SHIPPING WEIGHTS FOR ALL PRECAST ELEMENTS ON CONTRACT DRAWINGS.

PLACE DRILLED SHAFTS AND DRIVEN PILES WITHIN A HORIZONTAL TOLERANCE OF 3 INCHES IN PLAN.

IF NEEDED DETAILS ARE NOT FOUND IN THIS STANDARD, A SPECIAL SUBMISSION REQUESTING APPROVAL FOR SPECIFIC DETAILS MUST BE MADE TO THE CHIEF BRIDGE ENGINEER.

INDEX OF SHEETS

SHEET NO.	TITLE
GNS-1	PRECAST SUBSTRUCTURE - GENERAL NOTES 1
GNS-2	PRECAST SUBSTRUCTURE - GENERAL NOTES 2
P-1	PRECAST BENT - SINGLE COLUMN BENT
P-2	PRECAST BENT - DOUBLE COLUMN BENT
P-3	PRECAST BENT - TRIPLE COLUMN BENT
P-4	PRECAST BENT - TYPICAL COLUMN SECTIONS
P-5	PRECAST BENT - TYPICAL CONNECTION DETAILS 1
P-6	PRECAST BENT - TYPICAL CONNECTION DETAILS 2
F-1	PRECAST FOOTING - TYPICAL DETAILS
F-2	LEVELING DEVICE - TYPICAL DETAILS
IA-1	PRECAST INTEGRAL ABUTMENT - PLAN AND ELEVATION
IA-2	PRECAST INTEGRAL ABUTMENT - WINGWALL DETAILS
IA-3	PRECAST INTEGRAL ABUTMENT - ABUTMENT PLAN AND ELEVATION DETAILS
IA-4	PRECAST INTEGRAL ABUTMENT - BACKWALL DETAILS
IA-5	PRECAST INTEGRAL ABUTMENT - ABUTMENT SECTIONS
A-1	PRECAST CANTILEVER ABUTMENT - PLAN AND ELEVATION
A-2	PRECAST CANTILEVER ABUTMENT - SECTION AND DETAILS
A-3	PRECAST CANTILEVER ABUTMENT - DETAILS 1
A-4	PRECAST CANTILEVER ABUTMENT - WINGWALL DETAILS
AS-1	PRECAST APPROACH SLAB - TYPICAL DETAILS 1
AS-2	PRECAST APPROACH SLAB - TYPICAL DETAILS 2
AS-3	PRECAST APPROACH SLAB - TYPICAL DETAILS 3
AS-4	PRECAST APPROACH SLAB - TYPICAL DETAILS 4
AS-5	PRECAST APPROACH SLAB - TYPICAL DETAILS 5
T-1	TOLERANCES FOR PRECAST ELEMENTS - BENT CAP ELEMENTS
T-2	TOLERANCES FOR PRECAST ELEMENTS - ABUTMENT AND WALL ELEMENTS
T-3	TOLERANCES FOR PRECAST ELEMENTS - APPROACH SLAB ELEMENTS
W-1	TYPICAL WATERPROOFING DETAILS

3 / 18 / 2013

PENNSYLVANIA
DEPARTMENT OF TRANSPORTATION
RECOMMENDED
Thomas P Macioce
CHIEF BRIDGE ENGINEER

PENNDOT DRAWING 12-603-BDTD

MARK	DESCRIPTION	BY	CHK'D	RECM'D	DATE

REVISIONS

CENTRAL ATLANTIC BRIDGE ASSOCIATES (CABA)

BORTON-LAWSON
(570) 821-1999
WILKES-BARRE, PA

COMMONWEALTH OF PENNSYLVANIA
DEPARTMENT OF TRANSPORTATION

DATE:
SCALE: N/A

PRECAST CONCRETE SUBSTRUCTURE STANDARDS

DWN: CK'D:
JOB NO:

PRECAST SUBSTRUCTURE GENERAL NOTES 1

SHEET NO: GNS-1

P:\1000-0301-00\DWGS\GNS1_SUBSTRUCTURE GEN NOTES.dgn
2/15/2013 AT 9:27:12 AM

PRECAST CONCRETE SUBSTRUCTURES GENERAL NOTES

EVALUATION, DISPOSITION, AND ADJUSTED PAYMENT OF PRECAST SUBSTRUCTURE COMPONENTS

(A) GENERAL

LOW STRENGTH CONCRETE SUBSTRUCTURE COMPONENTS WILL BE EVALUATED USING THE COMPRESSIVE STRENGTH OF CONCRETE CYLINDER OR CONCRETE CORE TEST SPECIMENS.

(B) DEFINITIONS

F'(28-DAY): 28-DAY MINIMUM CONCRETE COMPRESSIVE STRENGTH (POUNDS PER SQUARE INCH), AS SPECIFIED ON THE APPROVED SHOP DRAWINGS.

F'(CYL): 28-DAY CONCRETE COMPRESSIVE STRENGTH (POUNDS PER SQUARE INCH), OF ACCEPTANCE CYLINDERS REPRESENTING A BEAM. DETERMINED AS THE AVERAGE OF THE COMPRESSIVE STRENGTH OF TWO OR MORE CYLINDERS.

F'(STR): MINIMUM CONCRETE COMPRESSIVE STRENGTH (POUNDS PER SQUARE INCH), FOR FORM REMOVAL AND HANDLING, AS SPECIFIED ON THE APPROVED SHOP DRAWINGS.

F'(CORE): CONCRETE COMPRESSIVE STRENGTH (POUNDS PER SQUARE INCH) OF ACCEPTANCE CORES EXTRACTED FROM A COMPONENT. DETERMINED AS THE AVERAGE OF THE COMPRESSIVE STRENGTH OF THREE CORES.

FCP: FABRICATED COMPONENT PRICE.

(C) EVALUATION, DISPOSITION, AND PAYMENT OF LOW STRENGTH PRECAST SUBSTRUCTURE COMPONENTS USING ACCEPTANCE CYLINDERS

IF F'(CYL), REPRESENTING A SPECIFIC COMPONENT, FAILS TO MEET THE F'(28-DAY) FOR THE SPECIFIED DESIGN, THE COMPONENT WILL BE CONSIDERED DEFICIENT. IF F'(CYL) < F'(STR), THE COMPONENT WILL BE REJECTED. IF F'(CYL) ≥ F'(STR), PERFORM STRUCTURAL CALCULATION BASED ON F'(CYL) FOR THE PRECAST COMPONENT. CALCULATIONS MUST INCLUDE ALL THE ORIGINAL DESIGN CONSIDERATIONS AND BE PERFORMED BY A PROFESSIONAL ENGINEER REGISTERED IN THE STATE. SUBMIT CALCULATIONS TO THE STRUCTURAL MATERIALS SECTION, MTD FOR REVIEW BY THE APPROPRIATE ENGINEERING DISTRICT. THESE CALCULATIONS MUST BE SUBMITTED WITHIN 2 WEEKS OF NOTIFICATION THAT F'(CYL) WAS DEFICIENT. IF THE STRUCTURAL CALCULATIONS SHOW THAT THE COMPONENT IS NOT ACCEPTABLE TO THE DEPARTMENT, THE COMPONENT WILL BE REJECTED. IF THE CALCULATIONS SHOW THAT THE COMPONENT IS STRUCTURALLY ACCEPTABLE, THE ADJUSTED PAYMENT WILL BE DETERMINED AS FOLLOWS:

ADJUSTED PAYMENT = [(A/B X 0.50) + 0.50] X FCP

WHERE:

A = F'(CYL) - F'(STR)
B = F'(28-DAY) - F'(STR)

AS AN ALTERNATIVE, WITHIN 2 WORKING DAYS OF NOTIFICATION OF DEFICIENT F'(CYL), REQUEST PERMISSION OF THE STRUCTURAL MATERIALS ENGINEER, IN WRITING, TO EXTRACT CONCRETE CORES FROM THE DEFICIENT COMPONENT. IF THIS ALTERNATE IS PERMITTED, THE PROCEDURES SPECIFIED IN SECTION 110.11(d) FOR EXTRACTING AND EVALUATING THE CORE SPECIMENS WILL BE FOLLOWED. WHEN CORING IS APPROVED, FINAL DISPOSITION OF THE LOW STRENGTH COMPONENT WILL BE DETERMINED BASED SOLELY ON THE COMPRESSIVE STRENGTH OF CORE SPECIMENS. THE ACCEPTANCE CYLINDER STRENGTH WILL NO LONGER BE USED.

(D) EVALUATION, DISPOSITION, AND PAYMENT OF LOW STRENGTH PRECAST SUBSTRUCTURE COMPONENTS USING CORES

WHEN CORING IS APPROVED BY THE STRUCTURAL MATERIALS ENGINEER, OBTAIN CORES, UNDER THE DIRECTION AND SUPERVISION OF THE REPRESENTATIVE OR HIS OR HER DESIGNATE, WITHIN 1 WEEK OF NOTIFICATION, AT NO ADDITIONAL COST TO THE DEPARTMENT.

OBTAIN THREE CORES, ONE FROM EACH THIRD OF THE DEFICIENT STRENGTH COMPONENT, ACCORDING TO AASHTO T 24. OBTAIN CORES FROM THE PORTION OF THE COMPONENT THAT DOES NOT CONTAIN REINFORCING. USE A PACHOMETER IF NECESSARY TO AVOID DAMAGE TO THE STIRRUPS OR REINFORCING. PATCH HOLES LEFT AFTER CORING USING AN APPROVED PATCHING MATERIAL FROM A MANUFACTURER LISTED IN BULLETIN NO.15 OR THE APPROVED CONCRETE MIX DESIGN.

DELIVER THE CORES TO THE REPRESENTATIVE IMMEDIATELY UPON DRILLING. CORES WILL BE DELIVERED TO THE MTD WITHIN 3 WORKING DAYS OF OBTAINING THEM. NO CORES WILL BE TESTED AT AN AGE OF GREATER THAN 50 DAYS. CORES WILL BE PREPARED FOR TESTING ACCORDING TO AASHTO T 24 AND COMPRESSIVE STRENGTH TESTING WILL BE CONDUCTED ACCORDING TO PTM NO.604.

THE [F'(CORE)] AND STANDARD DEVIATION(S) OF THREE CORES WILL BE DETERMINED AND THE RESULTS SENT TO THE SUPPLIER OF THE PRECAST COMPONENTS. IF F'(CORE) ≥ F'(28-DAY), THE COMPONENT WILL BE ACCEPTED AT FULL PAYMENT; NO STRUCTURAL ANALYSIS IS REQUIRED. IF F'(CORE) FALLS BELOW F'(STR), THE COMPONENT WILL BE REJECTED. IF s ≥ 1,000 POUNDS PER SQUARE INCH AND [F'(CORE)-s] < F'(STR), THE COMPONENT WILL ALSO BE REJECTED. IF s < 1,000 POUNDS PER SQUARE INCH OR [F'(CORE)-s] ≥ F'(STR), PERFORM STRUCTURAL CALCULATIONS BASED ON F'(CORE) AND SUBMIT THESE TO THE STRUCTURAL MATERIALS SECTION AS SPECIFIED IN PUBLICATION 408, SECTION 110.11(c). IF THE CALCULATIONS SHOW THAT THE COMPONENT IS NOT STRUCTURALLY ACCEPTABLE, THE COMPONENT WILL BE REJECTED. IF THE CALCULATIONS SHOW THAT THE COMPONENT IS STRUCTURALLY ACCEPTABLE, THE COMPONENT WILL BE ACCEPTED AT AN ADJUSTED PAYMENT. THE ADJUSTED PAYMENT WILL BE CALCULATED USING THE EQUATION SPECIFIED IN PUBLICATION 408, SECTION 110.11(c), EXCEPT THAT F'(CORE) WILL BE USED IN PLACE OF F'(CYL).

PENNDOT DRAWING 12-603-BDTD 3/18/2013

MARK	DESCRIPTION	BY	CHK'D	RECM'D	DATE

REVISIONS

CENTRAL ATLANTIC BRIDGE ASSOCIATES (CABA)

BORTON-LAWSON
(570) 821-1999
WILKES-BARRE, PA

COMMONWEALTH OF PENNSYLVANIA
DEPARTMENT OF TRANSPORTATION

DATE:
SCALE: N/A

PRECAST CONCRETE
SUBSTRUCTURE STANDARDS

DWN: CK'D:
JOB NO:

PRECAST SUBSTRUCTURE
GENERAL NOTES 2

SHEET NO:
GNS-2

P:\1000-0301-00\DWGS\GNS1_SUBSTRUCTURE GEN NOTES.dgn
2/15/2013 AT 9:27:12 AM

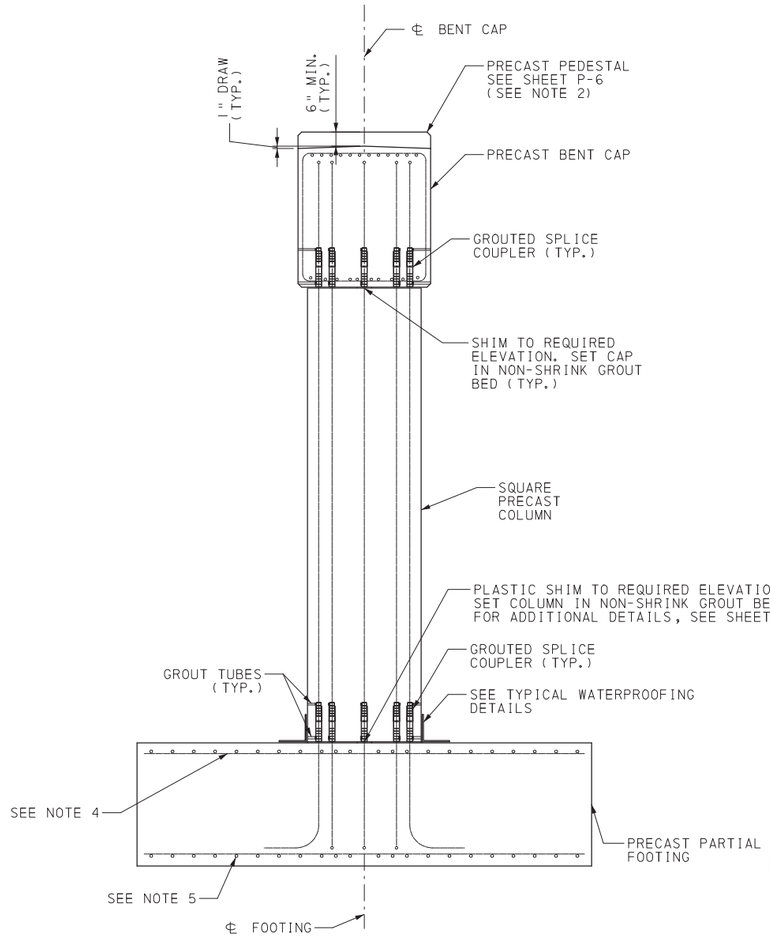

PRECAST SINGLE COLUMN BENT
SIDE VIEW

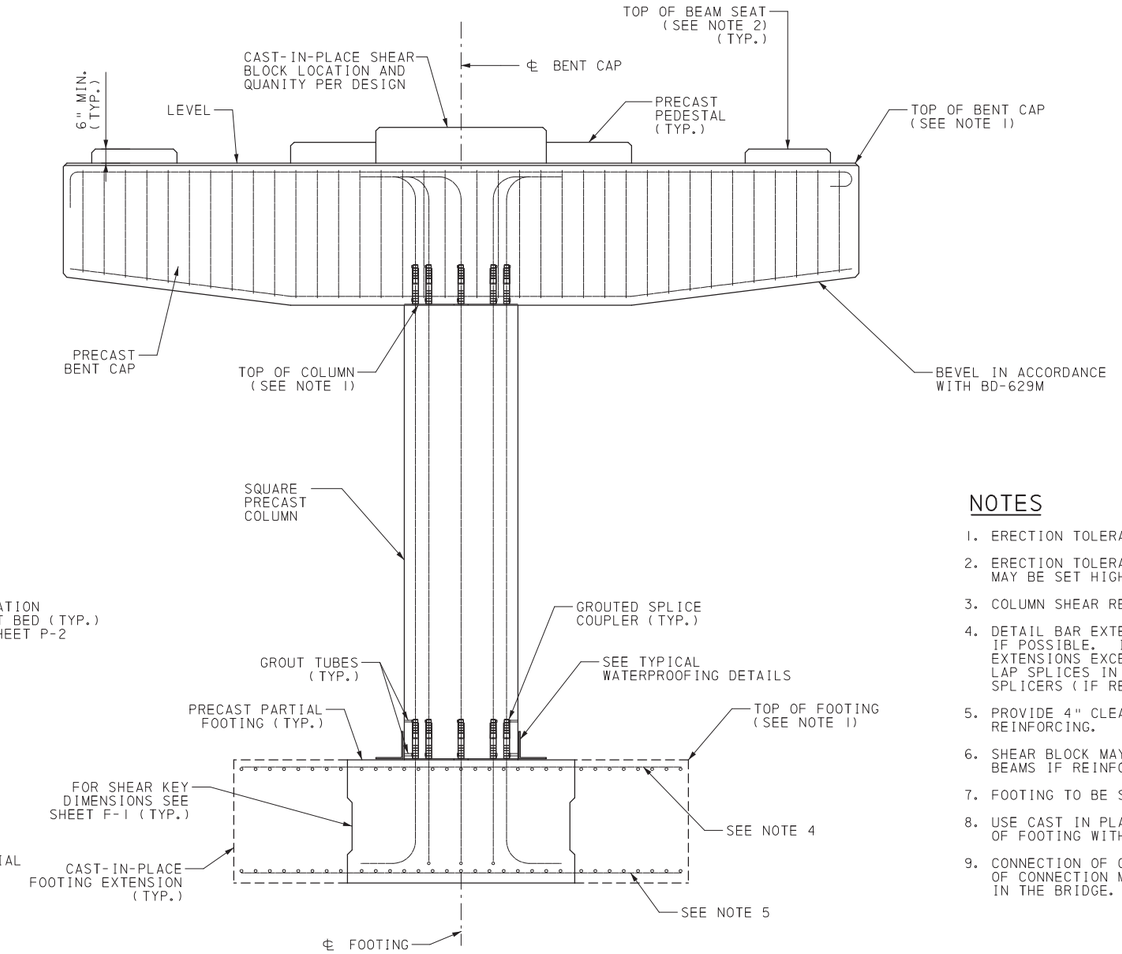

PRECAST SINGLE COLUMN BENT
ELEVATION

NOTES

1. ERECTION TOLERANCE ON ELEVATION ±1/4 ".
2. ERECTION TOLERANCE ON BEAM SEAT ELEVATION ±1/16 ". MAY BE SET HIGH AND GROUND TO SPECIFIED ELEVATION.
3. COLUMN SHEAR REINFORCEMENT NOT SHOWN FOR CLARITY.
4. DETAIL BAR EXTENSIONS TO THE LIMITS OF THE FOOTING IF POSSIBLE. IF TOTAL WIDTH OF FOOTING AND BAR EXTENSIONS EXCEEDS SHIPPING LIMITS, THEN DETAIL AS LAP SPLICES IN REINFORCING OR ADD MECHANICAL BAR SPLICERS (IF REQUIRED).
5. PROVIDE 4" CLEAR COVER FOR BOTTOM MATS OF FOOTING REINFORCING.
6. SHEAR BLOCK MAY BE PLACED BETWEEN OTHER BEAMS IF REINFORCING CONFLICTS ARISE.
7. FOOTING TO BE SET LEVEL.
8. USE CAST IN PLACE EXTENSIONS TO KEEP SIZE AND WEIGHT OF FOOTING WITHIN LIMITS.
9. CONNECTION OF COLUMN TO FOOTING SHOWN. THIS TYPE OF CONNECTION MAY ALSO BE USED FOR OTHER CONNECTIONS IN THE BRIDGE.

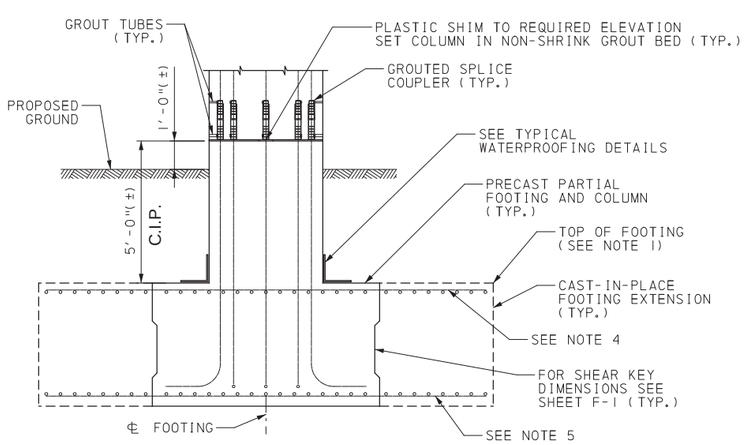

TYPICAL ABOVE GRADE
PRECAST SINGLE COLUMN BENT

DETAIL TO BE USED ON ALL STATE OWNED PROJECTS.
LOCALLY OWNED PROJECTS MAY BE AT OWNERS DISCRETION.

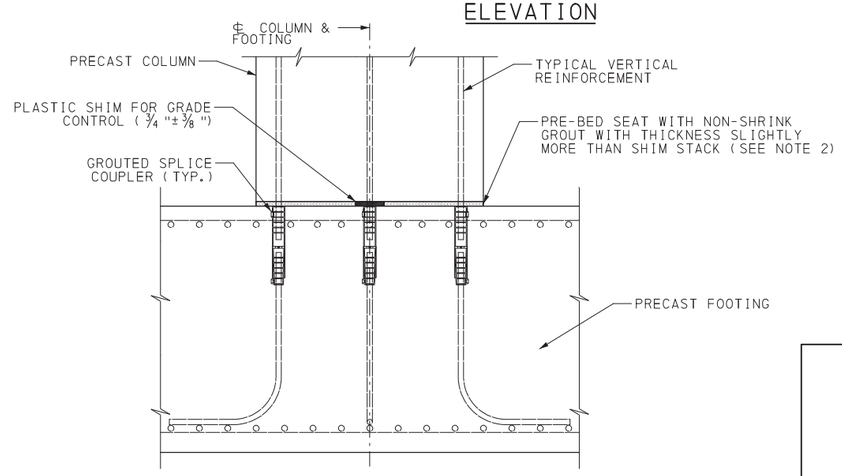

OPTIONAL GROUT COUPLER PLACEMENT

SEE NOTE 9

PENNDOT DRAWING 12-603-BDTD 3/18/2013

MARK	DESCRIPTION	BY	CHK'D	RECM'D	DATE

REVISIONS

CENTRAL ATLANTIC BRIDGE ASSOCIATES (CABA)

BORTON-LAWSON
(570) 821-1999
WILKES-BARRE, PA

COMMONWEALTH OF PENNSYLVANIA
DEPARTMENT OF TRANSPORTATION

DATE:
SCALE: N/A

PRECAST CONCRETE SUBSTRUCTURE STANDARDS

DWN: CK'D:
JOB NO:

PRECAST BENT SINGLE COLUMN BENT

SHEET NO: P-1

P:\1000-0301-00\DWGS\Piers and Footings - All P and F sheets.dgn
2/15/2013 AT 9:27:13 AM

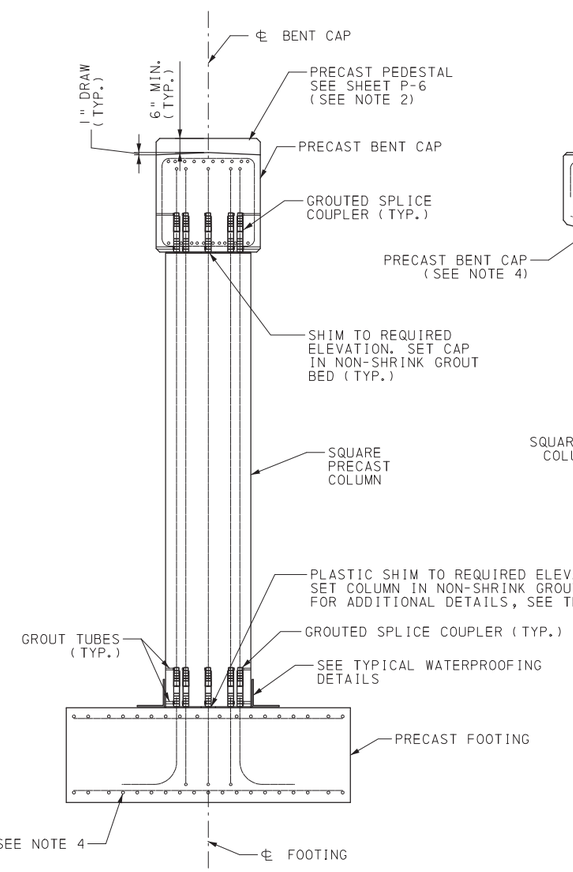

PRECAST DOUBLE COLUMN BENT
SIDE VIEW

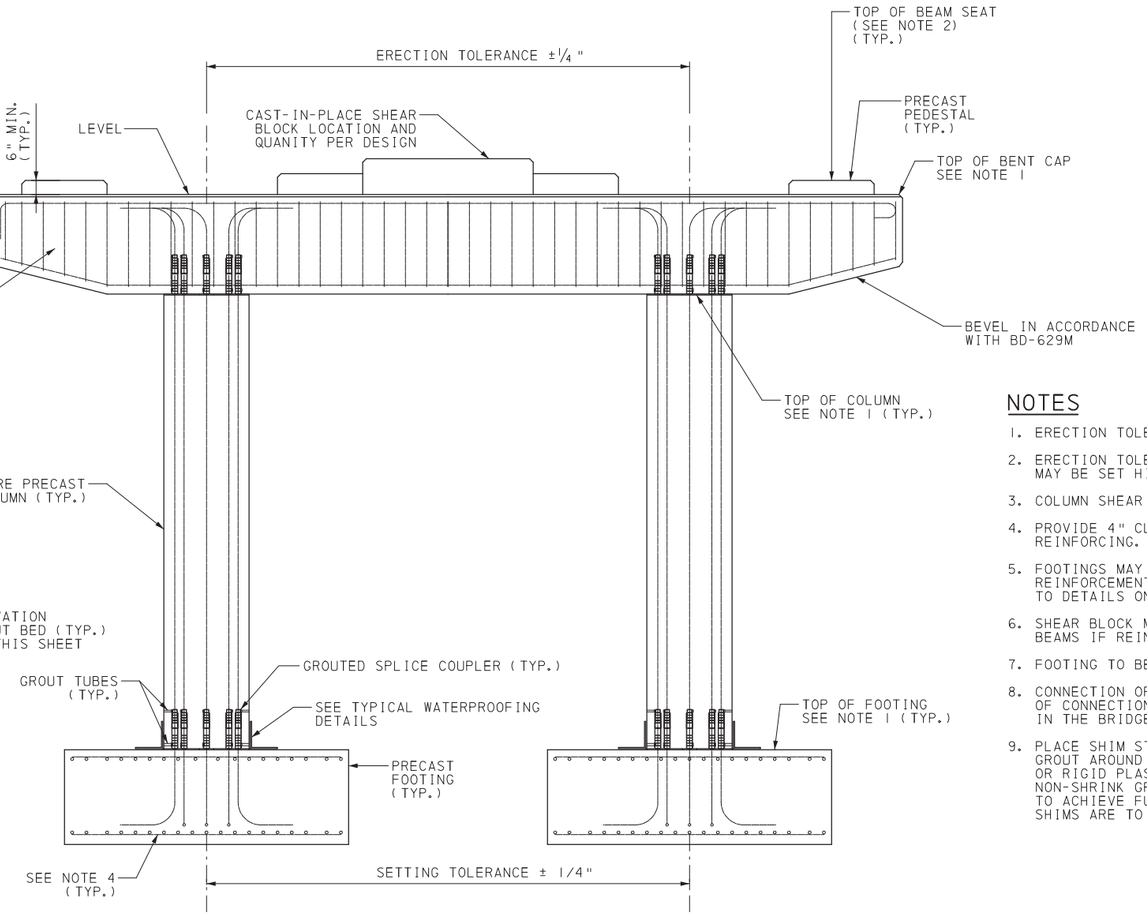

PRECAST DOUBLE COLUMN BENT
ELEVATION

NOTES

1. ERECTION TOLERANCE ON ELEVATION ±1/4".
2. ERECTION TOLERANCE ON BEAM SEAT ELEVATION ±1/16". MAY BE SET HIGH AND GROUND TO SPECIFIED ELEVATION.
3. COLUMN SHEAR REINFORCEMENT NOT SHOWN FOR CLARITY.
4. PROVIDE 4" CLEAR COVER FOR BOTTOM MATS OF FOOTING REINFORCING.
5. FOOTINGS MAY BE MADE CONTINUOUS BY EXTENDING REINFORCEMENT AND CASTING A CLOSURE POUR, SIMILAR TO DETAILS ON SHEET F-1.
6. SHEAR BLOCK MAY BE PLACED BETWEEN OTHER BEAMS IF REINFORCING CONFLICTS ARISE.
7. FOOTING TO BE SET LEVEL.
8. CONNECTION OF COLUMN TO FOOTING SHOWN. THIS TYPE OF CONNECTION MAY ALSO BE USED FOR OTHER CONNECTIONS IN THE BRIDGE.
9. PLACE SHIM STACK AS NOTED ON PLANS. PLACE NON-SHRINK GROUT AROUND SHIM STACK WITHIN LIMITS OF CONNECTION OR RIGID PLASTIC FOAM, AND AS SHOWN ON PLANS. NON-SHRINK GROUT TO BE SLIGHTLY HIGHER THAN SHIM STACK TO ACHIEVE FULL CONTACT BETWEEN BOTH CONNECTION SURFACES. SHIMS ARE TO REMAIN IN PLACE.

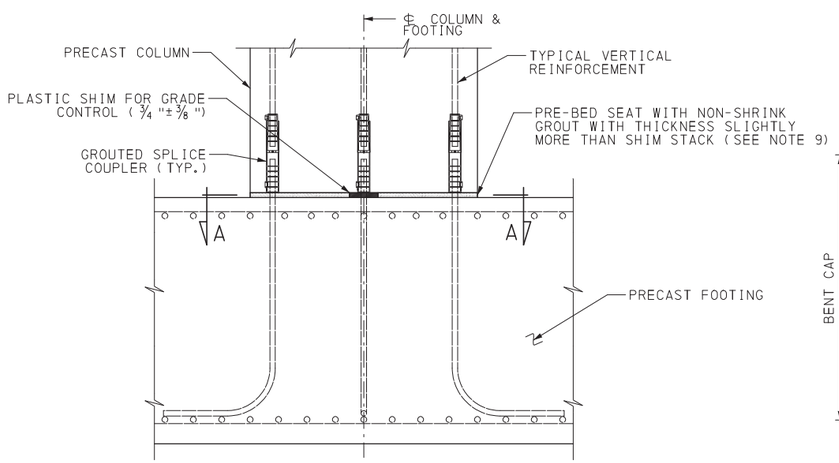

PRECAST COLUMN TO FOOTING CONNECTION

SEE NOTE 8

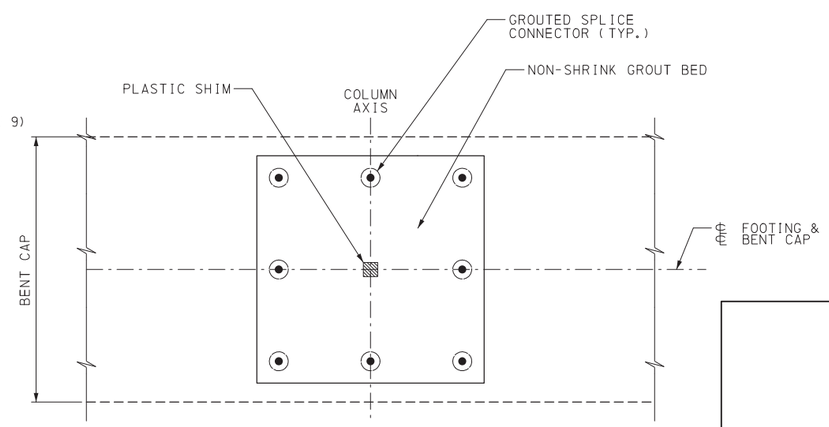

SECTION A-A

PENNDOT DRAWING 12-603-BDTD 3/18/2013

MARK	DESCRIPTION	BY	CHK'D	RECM'D	DATE

REVISIONS

CENTRAL ATLANTIC BRIDGE ASSOCIATES (CABA)

BORTON-LAWSON (570) 821-1999 WILKES-BARRE, PA

COMMONWEALTH OF PENNSYLVANIA
DEPARTMENT OF TRANSPORTATION

DATE:
SCALE: N/A

PRECAST CONCRETE SUBSTRUCTURE STANDARDS

DWN: CK'D:
JOB NO:

PRECAST BENT DOUBLE COLUMN BENT

SHEET NO: P-2

P:\1000-0301-00\DWGS\Piers and Footings - All P and F sheets.dgn
2/15/2013 AT 9:27:14 AM

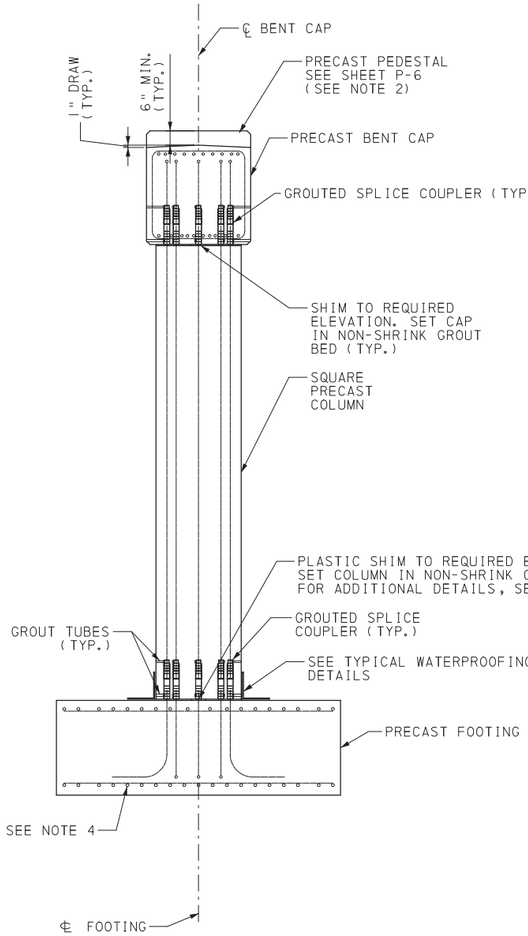

PRECAST TRIPLE COLUMN BENT
SIDE VIEW

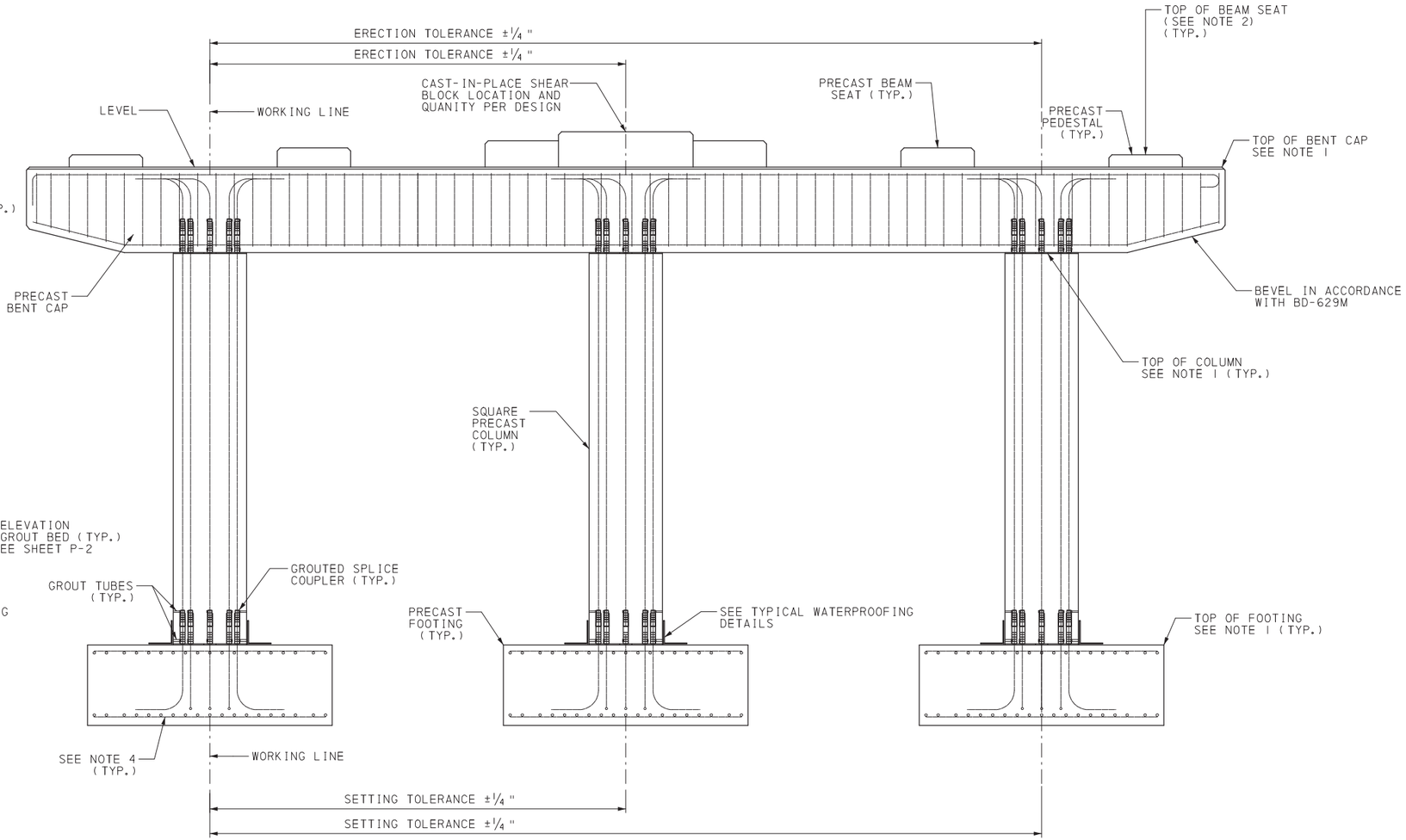

PRECAST TRIPLE COLUMN BENT
ELEVATION

NOTES

1. ERECTION TOLERANCE ON ELEVATION ±1/4".
2. ERECTION TOLERANCE ON BEAM SEAT ELEVATION ±1/16". MAY BE SET HIGH AND GROUND TO SPECIFIED ELEVATION.
3. COLUMN SHEAR REINFORCEMENT NOT SHOWN FOR CLARITY.
4. PROVIDE 4" CLEAR COVER FOR BOTTOM MATS OF FOOTING REINFORCING.
5. FOOTINGS MAY BE MADE CONTINUOUS BY EXTENDING REINFORCEMENT AND CASTING A CLOSURE POUR, SIMILAR TO DETAILS ON SHEET F-1.
6. SHEAR BLOCK MAY BE PLACED BETWEEN OTHER BEAMS IF REINFORCING CONFLICTS ARISE.
7. FOOTING TO BE SET LEVEL.

PENNDOT DRAWING 12-603-BDTD 3/18/2013

MARK	DESCRIPTION	BY	CHK'D	RECM'D	DATE
REVISIONS					

CENTRAL ATLANTIC BRIDGE ASSOCIATES (CABA)

BORTON-LAWSON
(570) 821-1999
WILKES-BARRE, PA

COMMONWEALTH OF PENNSYLVANIA
DEPARTMENT OF TRANSPORTATION

DATE:
SCALE: N/A

PRECAST CONCRETE SUBSTRUCTURE STANDARDS

DWN: CK'D:
JOB NO:

PRECAST BENT TRIPLE COLUMN BENT

SHEET NO: P-3

P:\1000-0301-00\DWGS\Piers and Footings - All P and F sheets.dgn
2/15/2013 AT 9:27:14 AM

NOTES

1. DETAILS SHOWN ARE BASED ON PROVIDING LONGITUDINAL REINFORCING EQUAL TO APPROXIMATELY 1.5 PERCENT OF THE GROSS AREA OF THE COLUMN. ACTUAL REINFORCING WILL VARY BY PROJECT BASED ON THE DESIGN.
2. IT IS NECESSARY TO PLACE THE FIRST GROUTED SPLICE COUPLER ON THE COLUMN AXIS LINE TO FACILITATE EASE OF CONSTRUCTION.

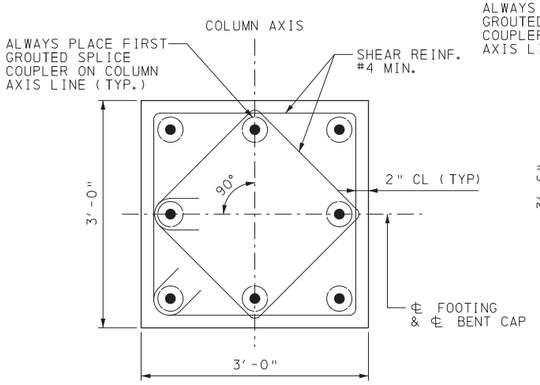

3'-0" COLUMN SECTION

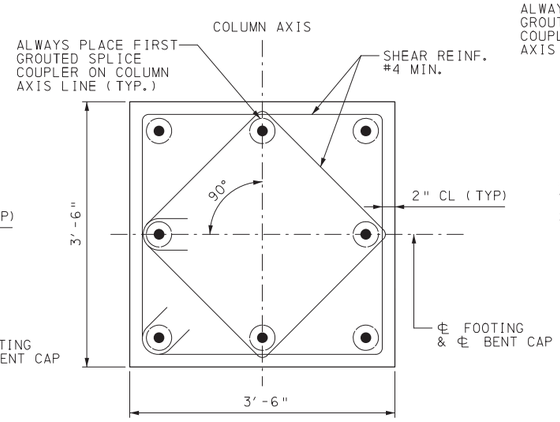

3'-6" COLUMN SECTION

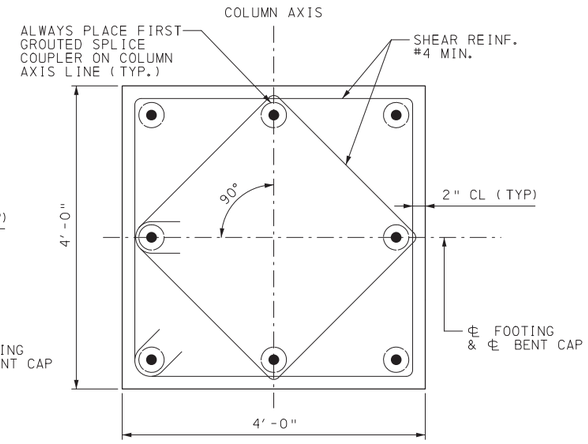

4'-0" COLUMN SECTION

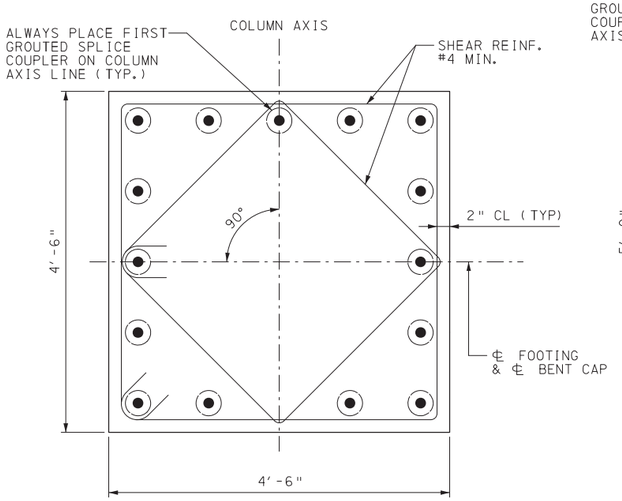

4'-6" COLUMN SECTION

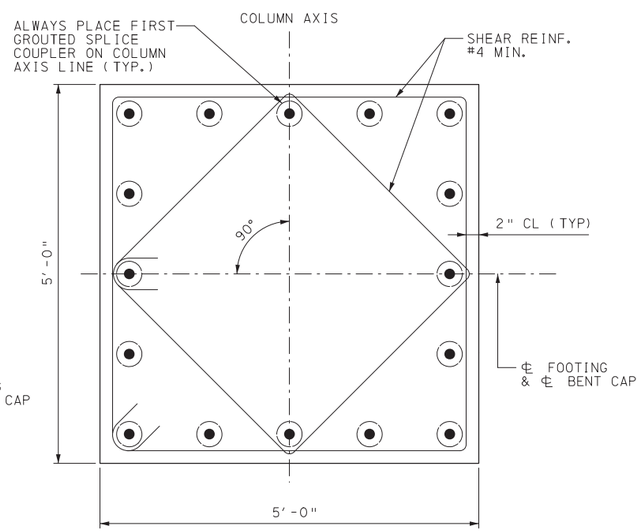

5'-0" COLUMN SECTION

PENNDOT DRAWING 12-603-BDTD 3/18/2013

MARK	DESCRIPTION	BY	CHK'D	RECM'D	DATE
	REVISIONS				

CENTRAL ATLANTIC BRIDGE ASSOCIATES (CABA)

BORTON-LAWSON
(570) 821-1999
WILKES-BARRE, PA

COMMONWEALTH OF PENNSYLVANIA
DEPARTMENT OF TRANSPORTATION

PRECAST CONCRETE SUBSTRUCTURE STANDARDS

PRECAST BENT TYPICAL COLUMN SECTIONS

DATE:
SCALE: N/A
DWN: CK'D:
JOB NO:
SHEET NO: P-4

P:\1000-0301-00\DWGS\Piers and Footings - All P and F sheets.dgn
2/15/2013 AT 9:27:15 AM

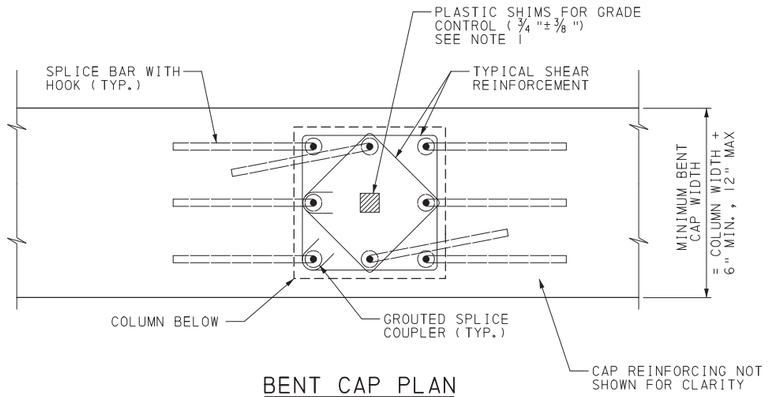

BENT CAP PLAN

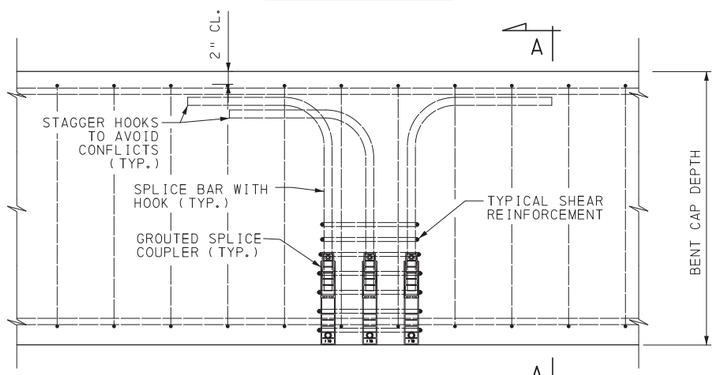

BENT CAP ELEVATION A

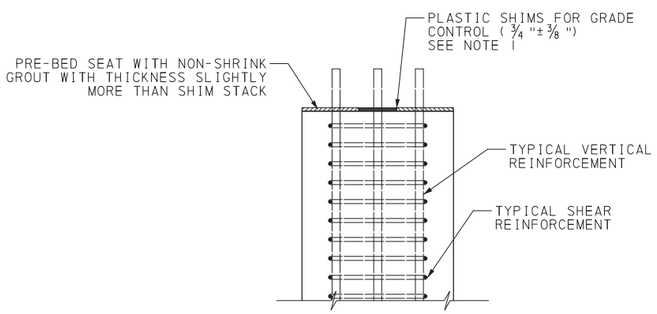

COLUMN ELEVATION

COLUMN TO BENT CAP CONNECTION
PRIOR TO CONNECTION

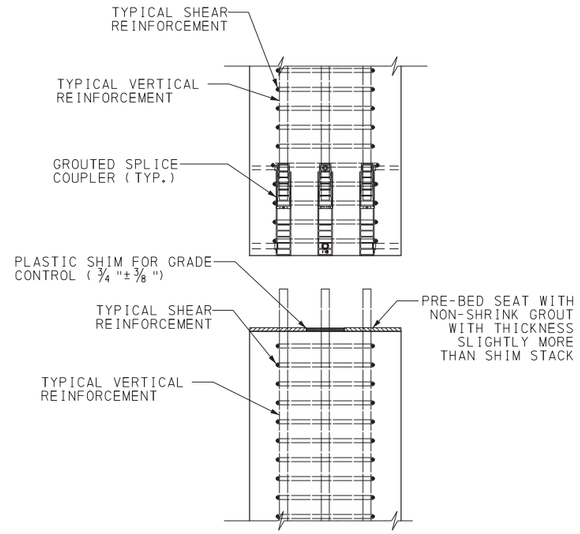

COLUMN TO COLUMN CONNECTION
PRIOR TO CONNECTION

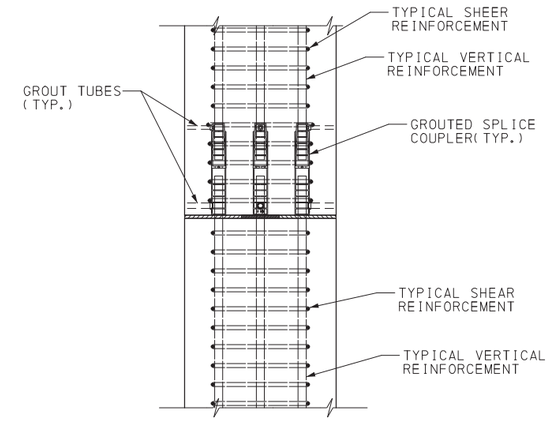

COLUMN TO COLUMN CONNECTION
AFTER CONNECTION

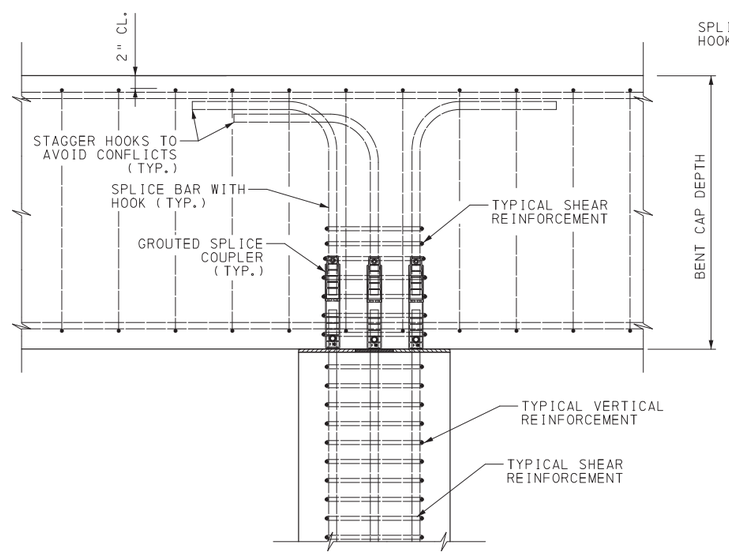

COLUMN TO BENT CAP CONNECTION
AFTER CONNECTION

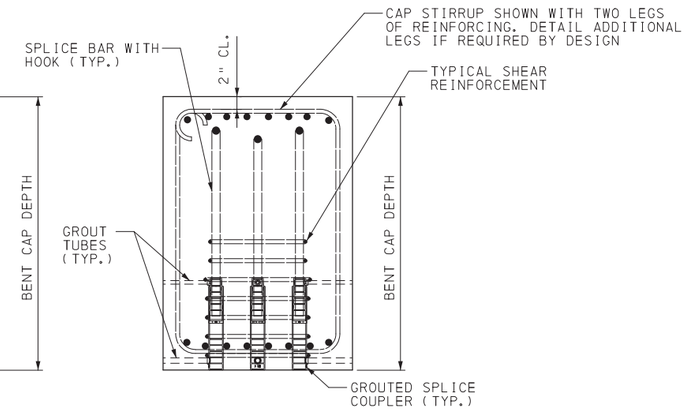

SECTION A-A
BENT CAP SECTION

NOTES

1. ADJUST SHIM STACK HEIGHT TO CONTROL ERECTION ELEVATIONS.
2. COLUMN TO COLUMN SPLICE SHOWN. THIS DETAIL MAY BE USED FOR TALL COLUMNS. COLUMN TO FOOTING DETAILS SIMILAR.

PENNDOT DRAWING 12-603-BDTD 3 / 18 / 2013

MARK	DESCRIPTION	BY	CHK'D	RECM'D	DATE

REVISIONS

CENTRAL ATLANTIC BRIDGE ASSOCIATES (CABA)

BORTON-LAWSON
(570) 821-1999
WILKES-BARRE, PA

COMMONWEALTH OF PENNSYLVANIA
DEPARTMENT OF TRANSPORTATION

DATE:
SCALE: N/A

PRECAST CONCRETE
SUBSTRUCTURE STANDARDS

DWN: CK'D:
JOB NO:

PRECAST BENT
TYPICAL CONNECTION DETAILS 1

SHEET NO:
P-5

P:\1000-0301-00\DWGS\Piers and Footings - All P and F sheets.dgn
2/15/2013 AT 9:27:15 AM

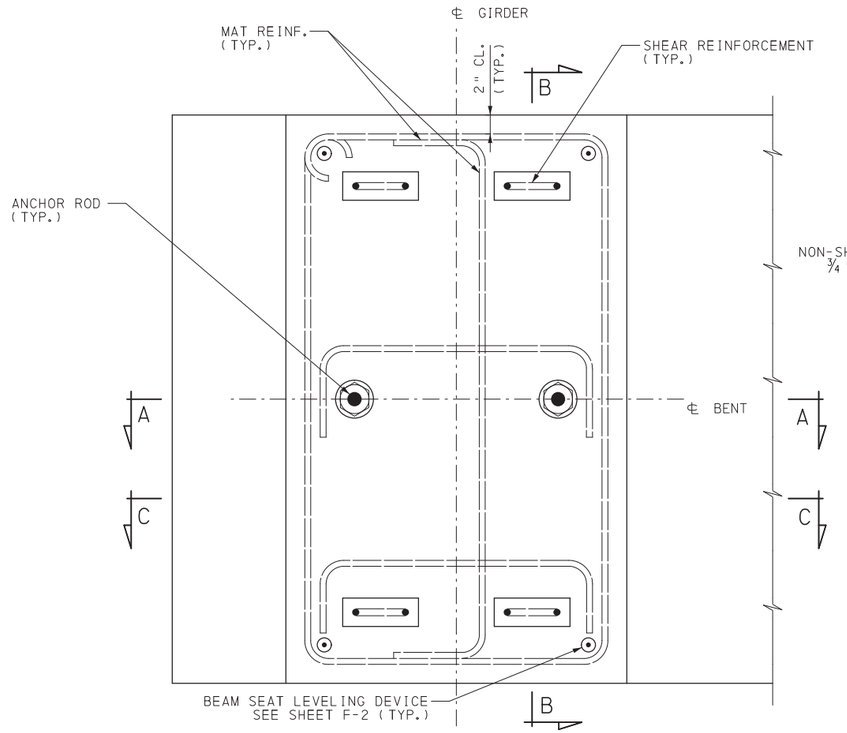

PLAN OF BEAM SEAT PEDESTAL ON BENT CAP

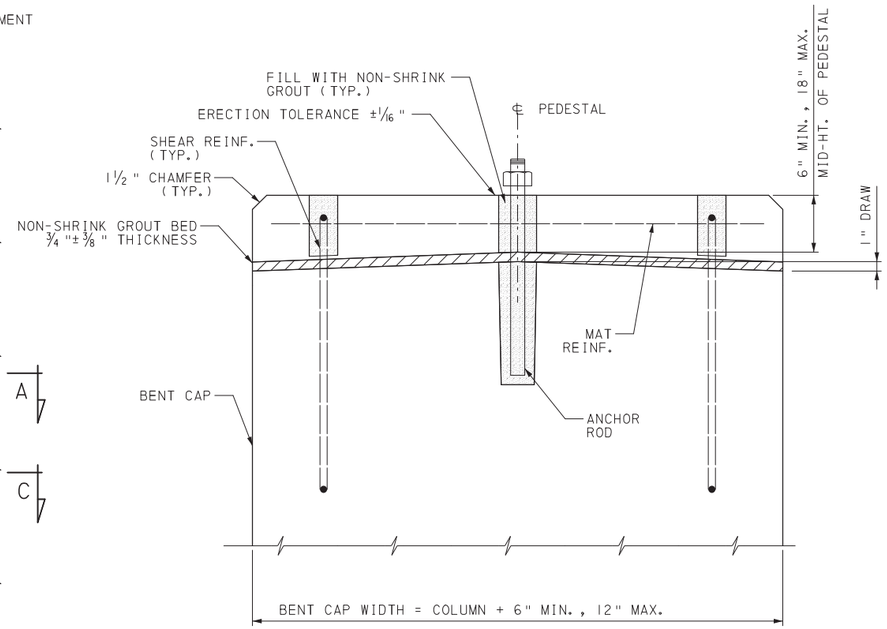

SECTION B-B

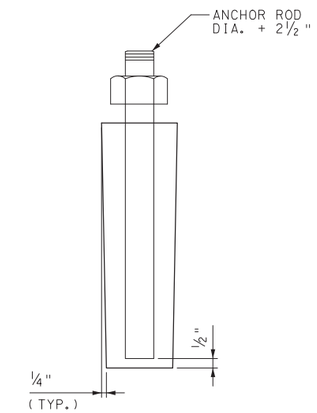

ANCHOR ROD FORM

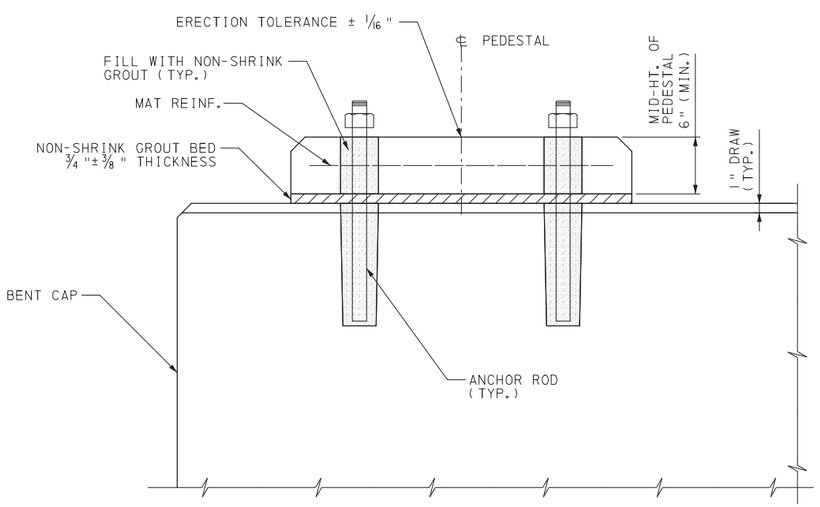

SECTION A-A

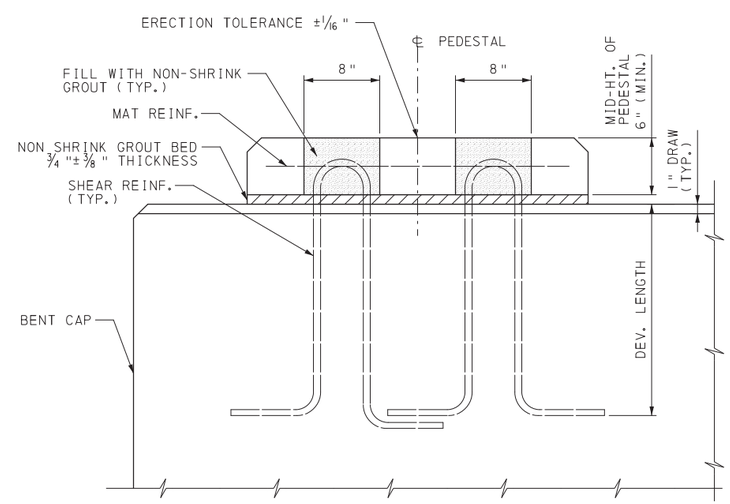

SECTION C-C

NOTES:

1. DETAILS SHOWN DEPICT A SINGLE PEDESTAL ON A BENT CAP. DETAILS FOR CANTILEVER ABUTMENTS AND BACK TO BACK BEAMS ON A BENT CAP ARE SIMILAR.

PENNDOT DRAWING 12-603-BDTD 3/18/2013

MARK	DESCRIPTION	BY	CHK'D	RECM'D	DATE

REVISIONS

CENTRAL ATLANTIC BRIDGE ASSOCIATES (CABA)

BORTON-LAWSON (570) 821-1999 WILKES-BARRE, PA

COMMONWEALTH OF PENNSYLVANIA
DEPARTMENT OF TRANSPORTATION

DATE:
SCALE: N/A

PRECAST CONCRETE SUBSTRUCTURE STANDARDS

DWN: CK'D:
JOB NO:

PRECAST BENT TYPICAL CONNECTION DETAILS 2

SHEET NO: P-6

P:\1000-0301-00\DWGS\Piers and Footings - All P and F sheets.dgn
2/15/2013 AT 9:27:15 AM

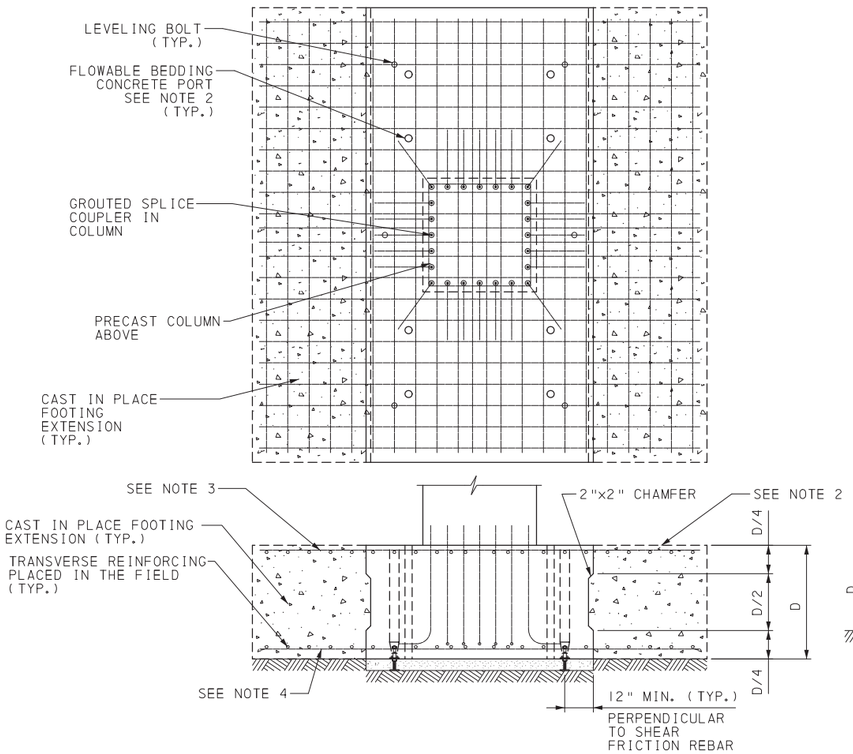

PARTIAL PRECAST SPREAD FOOTING

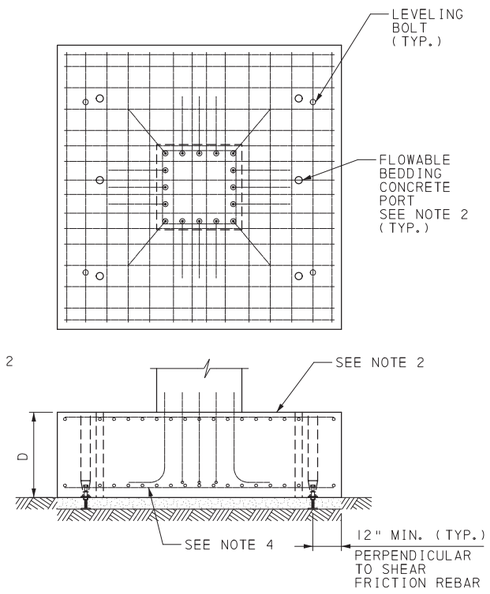

PRECAST SPREAD FOOTING

NOTE: DESIGNER TO LIST SHIPPING WEIGHT ON PLAN SET

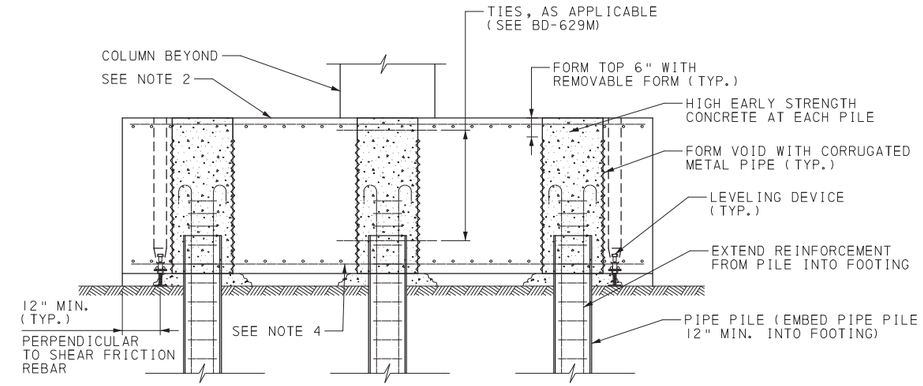

PRECAST FOOTING ON PIPE PILES

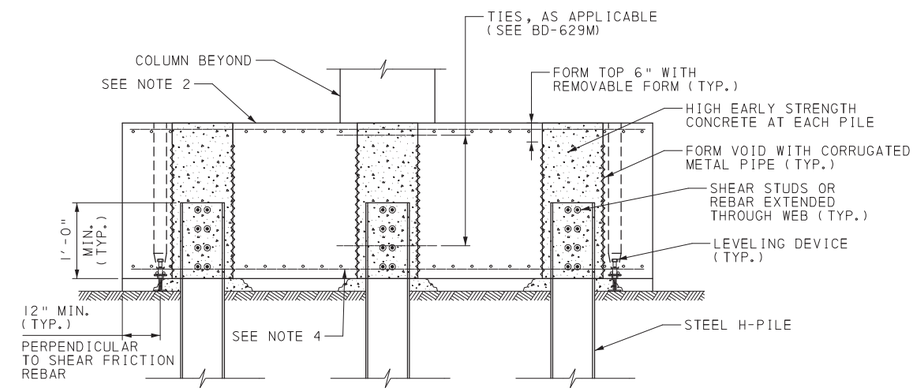

PRECAST FOOTING ON STEEL H-PILE

NOTE: WELDABLE REINFORCING STEEL BARS CAN BE FIELD WELDED TO THE PILE WEB AFTER PILE CUT-OFF

PRECAST FOOTING NOTES

1. CONTRACTOR TO DETERMINE SIZE AND SPACING OF PORTS BASED ON MIX DESIGN AND PILE SPIRAL REINFORCING DIAMETER.
2. ERECTION TOLERANCE ON ELEVATION ±¼".
3. DETAIL BAR EXTENSIONS TO THE LIMITS OF THE FOOTING IF POSSIBLE. IF TOTAL WIDTH OF FOOTING AND BAR EXTENSIONS EXCEEDS SHIPPING LIMITS, THEN DETAIL AS LAP SPLICES IN REINFORCING OR ADD MECHANICAL BAR SPLICERS.
4. PROVIDE 4" CLEAR COVER FOR BOTTOM MATS OF REINFORCING.
5. FOR ALL LEVELING DEVICE DETAILS SEE SHEET F-2.
6. ALL REINFORCING NOT SHOWN IN FOOTING.
7. USE CAST-IN-PLACE EXTENSIONS TO KEEP SIZE AND WEIGHT OF PRECAST FOOTING WITHIN LIMITS.

PENNDOT DRAWING 12-603-BDTD 3/18/2013

MARK	DESCRIPTION	BY	CHK'D	RECM'D	DATE

REVISIONS

CENTRAL ATLANTIC BRIDGE ASSOCIATES (CABA)

BORTON-LAWSON (570) 821-1999 WILKES-BARRE, PA

COMMONWEALTH OF PENNSYLVANIA
DEPARTMENT OF TRANSPORTATION

DATE:
SCALE: N/A

PRECAST CONCRETE SUBSTRUCTURE STANDARDS

DWN: CK'D:
JOB NO:

PRECAST FOOTING TYPICAL DETAILS

SHEET NO: F-1

P:\1000-0301-00\DWGS\Pfers and Footings - All P and F sheets.dgn
2/15/2013 AT 9:27:16 AM

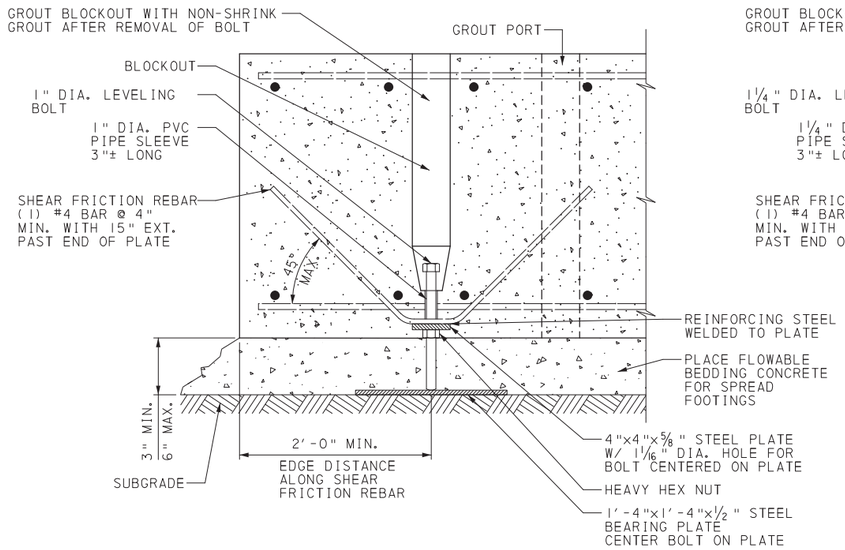

FOOTING INSTALLATION DETAIL
CAPACITY: 10,000 POUND SERVICE LOAD

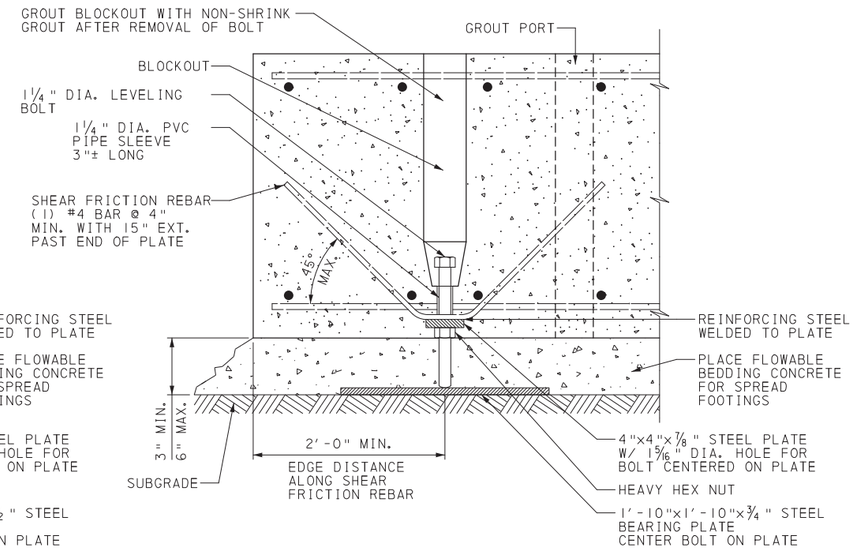

FOOTING INSTALLATION DETAIL
CAPACITY: 20,000 POUND SERVICE LOAD

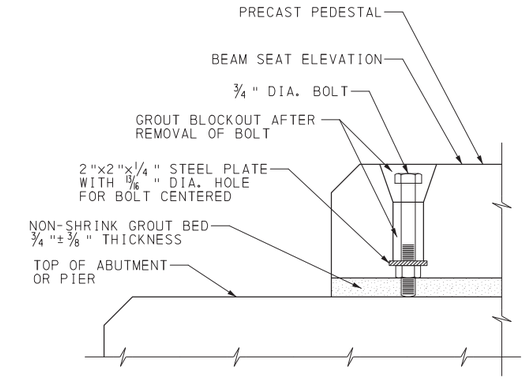

BEAM SEAT LEVELING DEVICE DETAIL

FOOTING INSTALLATION NOTES

1. ALTERNATE LEVELING DEVICES MAY BE SUBSTITUTED BY THE CONTRACTOR WITH THE APPROVAL FROM THE ENGINEER.
2. ALLOWABLE LOADS ARE SERVICE LOADS.
3. FOR MATERIAL NOTES, SEE SHEET GNS-1.
4. REINFORCEMENT BARS ARE WELDABLE ASTM A706.
5. GREASE OR OIL NUT & BOLT THREADS TO FACILITATE LEVELING AND REMOVAL.
6. BOLT MAY BE REMOVED AFTER THE FLOWABLE BEDDING CONCRETE HAS SET.
7. BEARING PLATE SIZE AND THICKNESS IS BASED ON A TEMPORARY ALLOWABLE SOIL BEARING PRESSURE OF 6000 PSF. ADJUST PLATE SIZE FOR OTHER SITUATIONS.

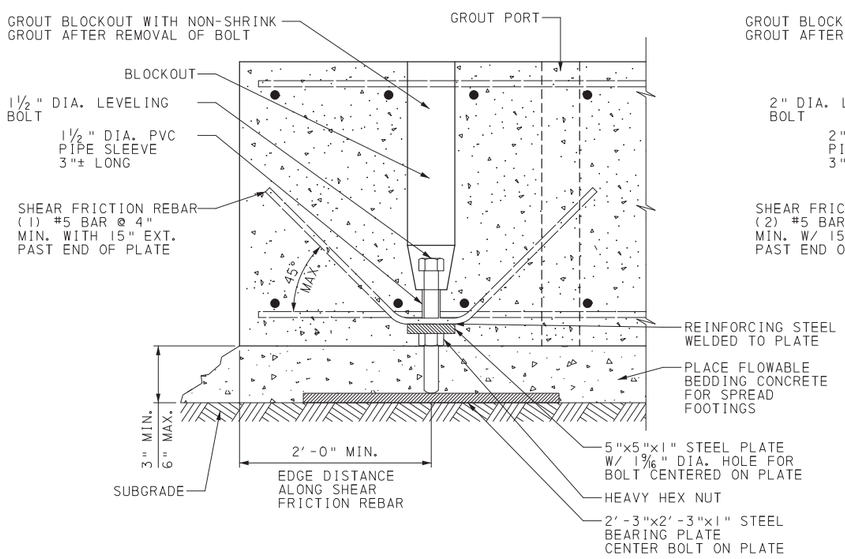

FOOTING INSTALLATION DETAIL
CAPACITY: 30,000 POUND SERVICE LOAD

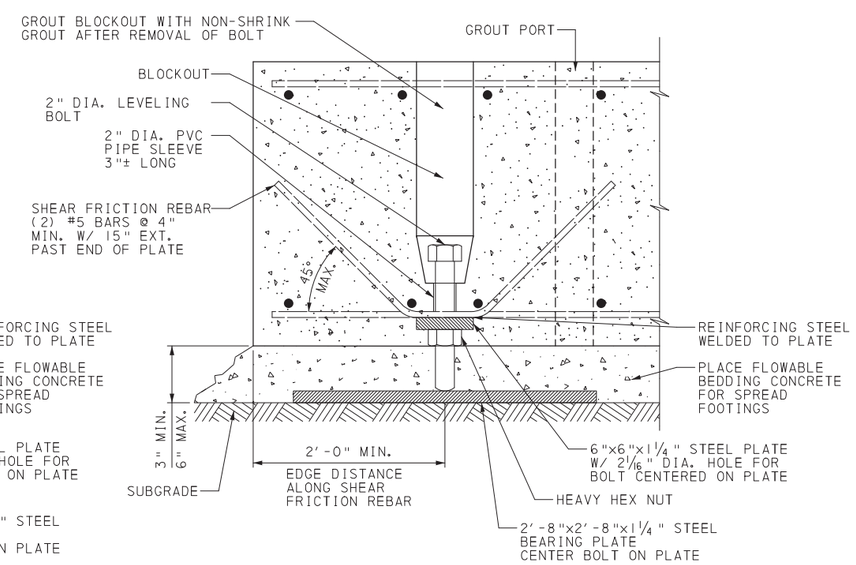

FOOTING INSTALLATION DETAIL
CAPACITY: 40,000 POUND SERVICE LOAD

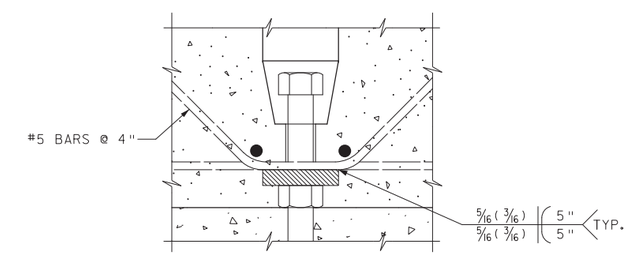

TYPICAL WELD DETAIL

PENNDOT DRAWING 12-603-BDTD 3/18/2013

MARK	DESCRIPTION	BY	CHK'D	RECM'D	DATE

REVISIONS

CENTRAL ATLANTIC BRIDGE ASSOCIATES (CABA)

BORTON-LAWSON
(570) 821-1999
WILKES-BARRE, PA

COMMONWEALTH OF PENNSYLVANIA
DEPARTMENT OF TRANSPORTATION

DATE:
SCALE: N/A

PRECAST CONCRETE SUBSTRUCTURE STANDARDS

DWN: CK'D:
JOB NO:

LEVELING DEVICE TYPICAL DETAILS

SHEET NO: F-2

P:\1000-0301-00\DWGS\Piers and Footings - All P and F sheets.dgn
2/15/2013 AT 9:27:16 AM

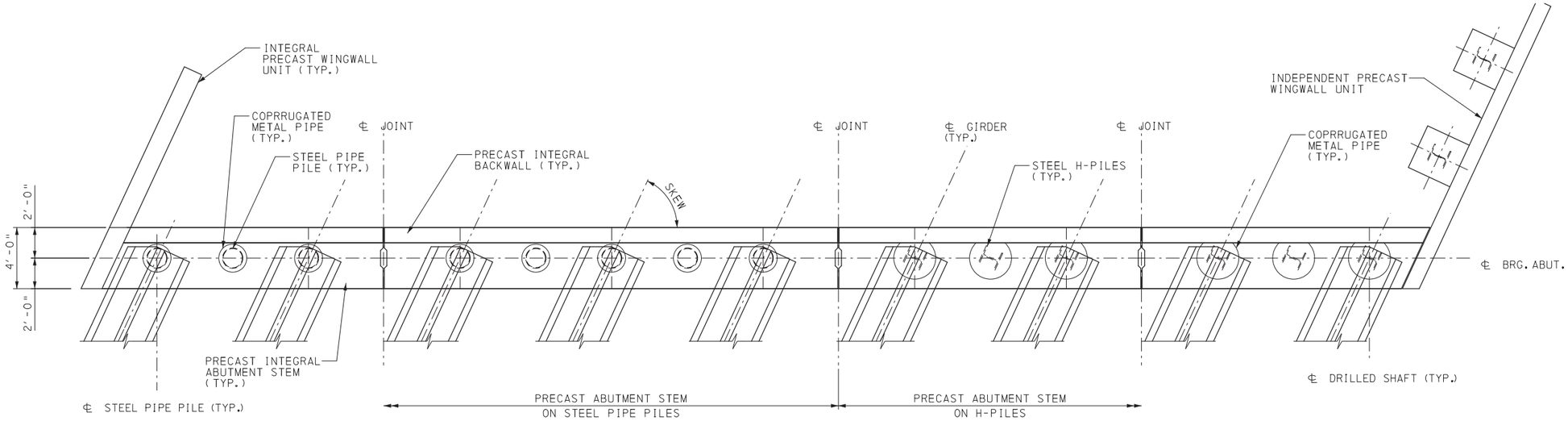

ABUTMENT PLAN

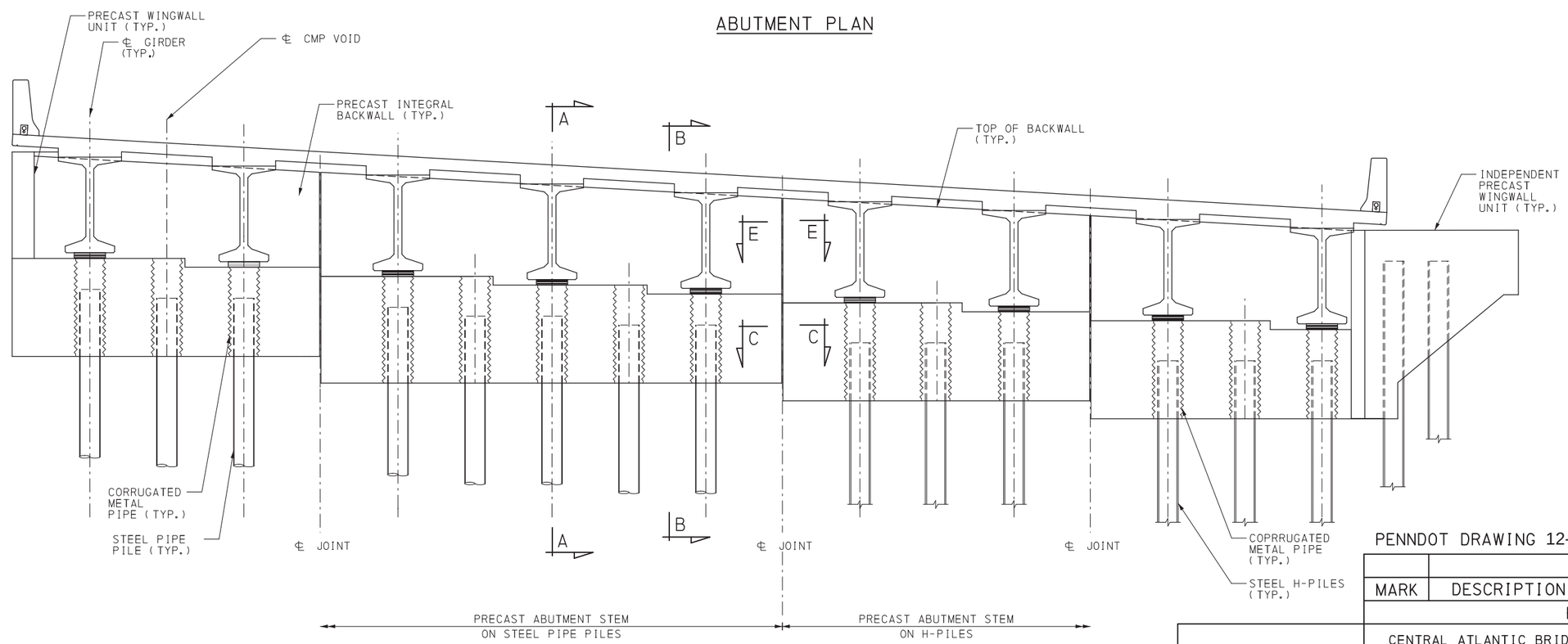

ABUTMENT ELEVATION

NOTES:
1. ABUTMENT DIAPHRAGMS NOT SHOWN FOR CLARITY.
2. DIFFERENT FOUNDATIONS ARE SHOWN TO DEPICT DIFFERENT DESIGNS. DO NOT COMBINE DIFFERENT FOUNDATIONS ON ANY ONE SUBSTRUCTURE ELEMENT UNLESS REQUIRED BY DESIGN.
3. LARGER VOIDS MAY BE USED WITH PIPE PILES TO REDUCE WEIGHT.
4. FOR SECTIONS A-A, B-B, C-C, AND E-E, SEE SHEET IA-5.

PENNDOT DRAWING 12-603-BDTD 3/18/2013

MARK	DESCRIPTION	BY	CHK'D	RECM'D	DATE

REVISIONS

CENTRAL ATLANTIC BRIDGE ASSOCIATES (CABA)

BORTON-LAWSON (570) 821-1999 WILKES-BARRE, PA

COMMONWEALTH OF PENNSYLVANIA
DEPARTMENT OF TRANSPORTATION

DATE:
SCALE: N/A

PRECAST CONCRETE SUBSTRUCTURE STANDARDS

DWN: CK'D:
JOB NO:

PRECAST INTEGRAL ABUTMENT PLAN AND ELEVATION

SHEET NO: IA-1

P:\1000-0301-00\DWGS\int abutments - All 5 IA sheets.dgn
2/15/2013 AT 9:27:17 AM

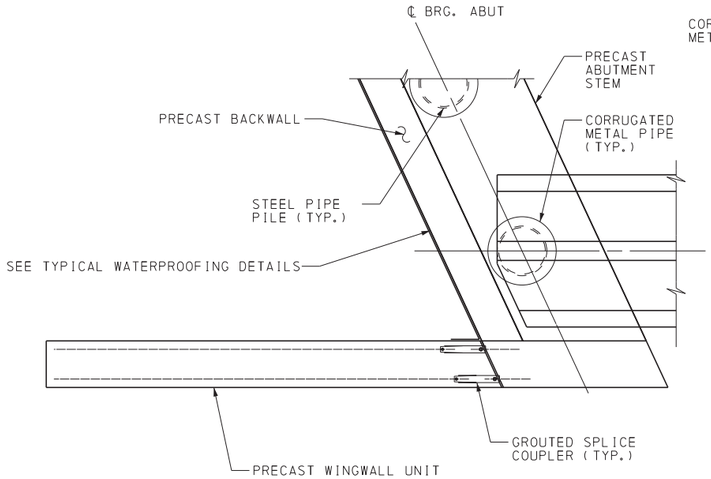

PRECAST INTEGRAL WINGWALL PLAN

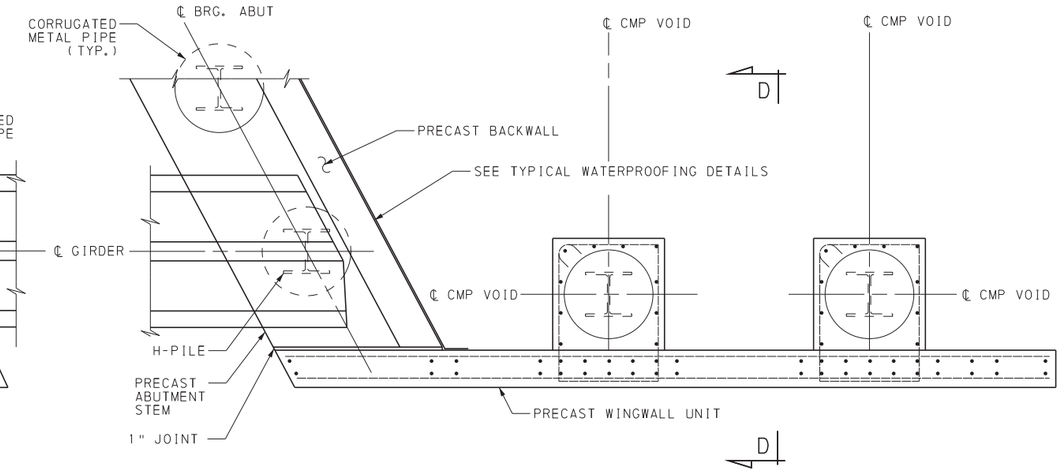

PRECAST INDEPENDENT WINGWALL PLAN

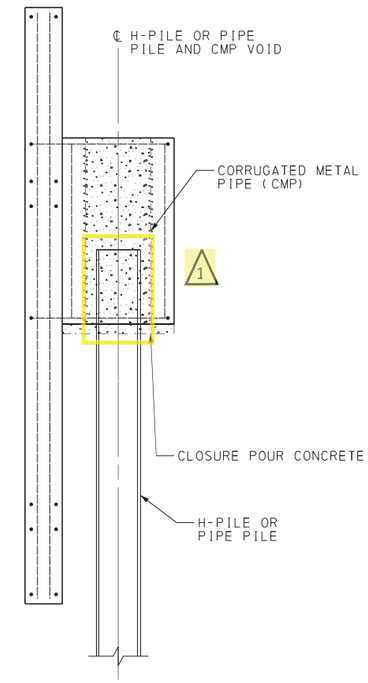

WINGWALL SECTION D-D

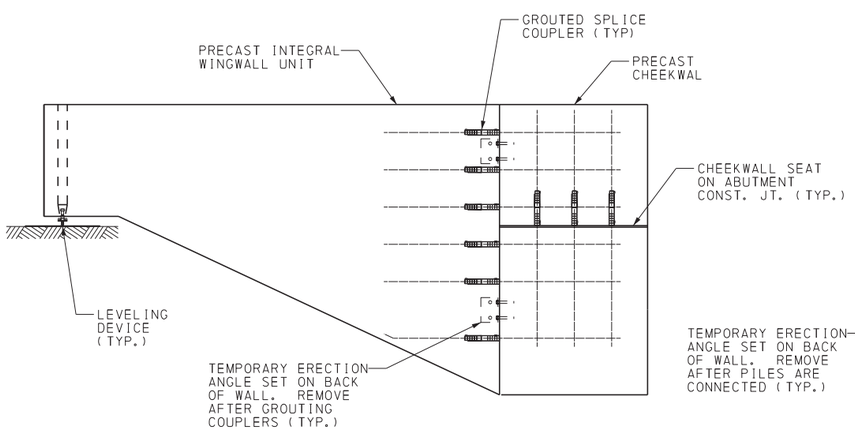

PRECAST INTEGRAL WINGWALL ELEVATION

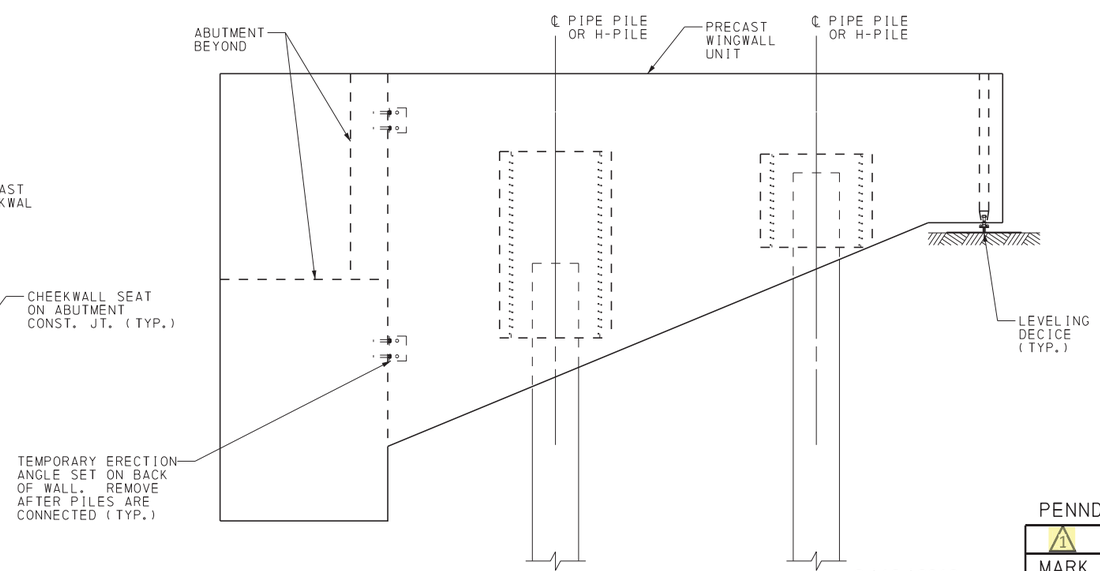

PRECAST INDEPENDENT WINGWALL ELEVATION

3 / 18 / 2013

NOTES:

1. ALL REINFORCING NOT SHOWN FOR CLARITY.
2. PROVIDE TEMPORARY BRACING/SHORING UNTIL CONNECTION HAS ACHIEVED ADEQUATE STRENGTH.
3. INSTALL DEEP FOUNDATION PRIOR TO SETTING WINGWALL ELEMENTS.
4. REFER TO SHEET IA-5 FOR DETAILS OF PILE CONNECTION IN PRECAST PILE CAP FOR INTEGRAL ABUTMENT. (1)

PENNDOT DRAWING 12-603-BDTD, REV. 1

MARK	DESCRIPTION	BY	CHK'D	RECM'D	DATE
1	PILE CONNECTION	GL	KRS	TPM	5/14/15

REVISIONS

CENTRAL ATLANTIC BRIDGE ASSOCIATES (CABA)

BORTON-LAWSON (570) 821-1999 WILKES-BARRE, PA

COMMONWEALTH OF PENNSYLVANIA
DEPARTMENT OF TRANSPORTATION

DATE:
SCALE: N/A

PRECAST CONCRETE SUBSTRUCTURE STANDARDS

DWN: CK'D:
JOB NO:

PRECAST INTEGRAL ABUTMENT WINGWALL DETAILS

SHEET NO: IA-2

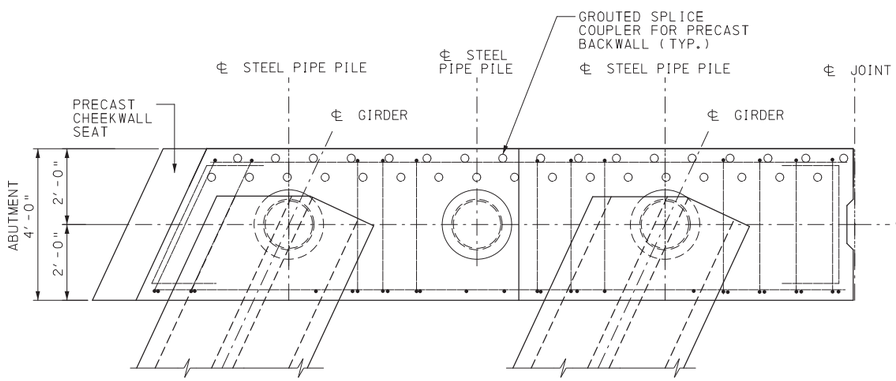

END ABUTMENT SEGMENT PLAN
WITH STEEL PIPE PILES

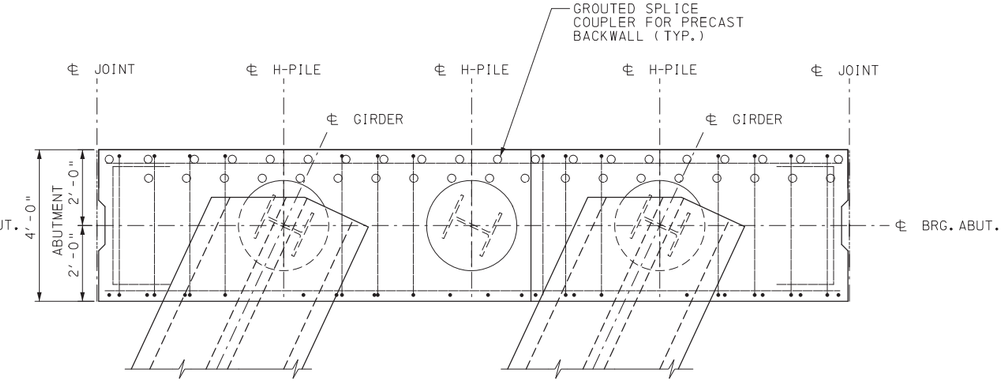

INTERIOR ABUTMENT SEGMENT PLAN
WITH STEEL H-PILES

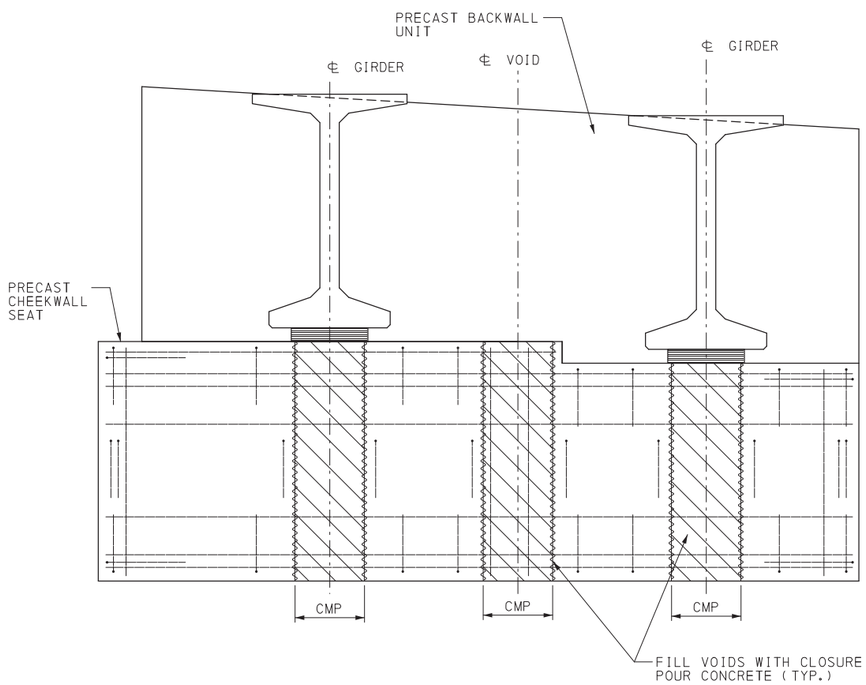

END ABUTMENT SEGMENT ELEVATION
WITH STEEL PIPE PILES

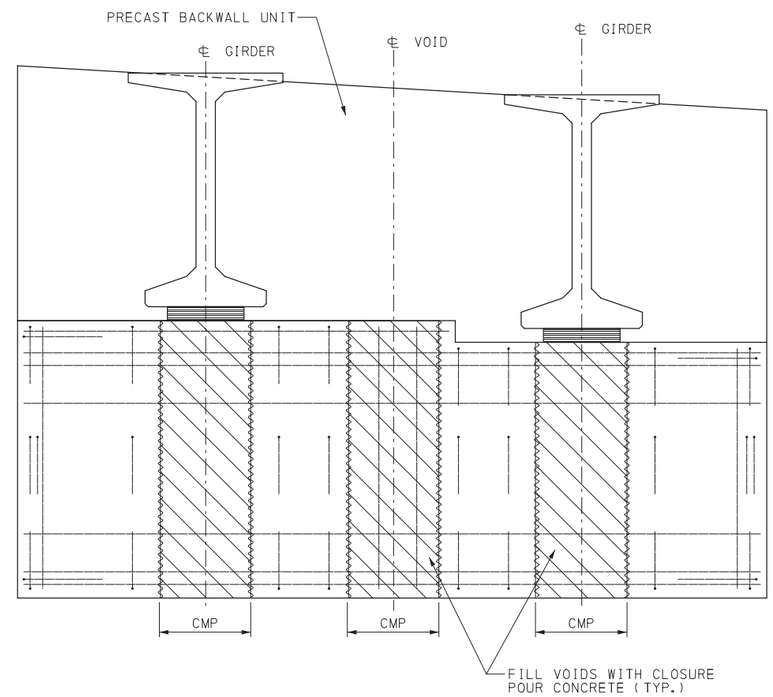

INTERIOR ABUTMENT SEGMENT ELEVATION
WITH STEEL H-PILES

PENNDOT DRAWING 12-603-BDTD 3/18/2013

MARK	DESCRIPTION	BY	CHK'D	RECM'D	DATE

REVISIONS

CENTRAL ATLANTIC BRIDGE ASSOCIATES (CABA)

BORTON-LAWSON
(570) 821-1999
WILKES-BARRE, PA

COMMONWEALTH OF PENNSYLVANIA
DEPARTMENT OF TRANSPORTATION

DATE:
SCALE: N/A

PRECAST CONCRETE
SUBSTRUCTURE STANDARDS

DWN: CK'D:
JOB NO:

PRECAST INTEGRAL ABUTMENT
ABUTMENT PLAN & ELEVATION DETAILS

SHEET NO:
IA-3

P:\1000-0301-00\DWGS\Int abutments - All 5 IA sheets.dgn
2/15/2013 AT 9:27:18 AM

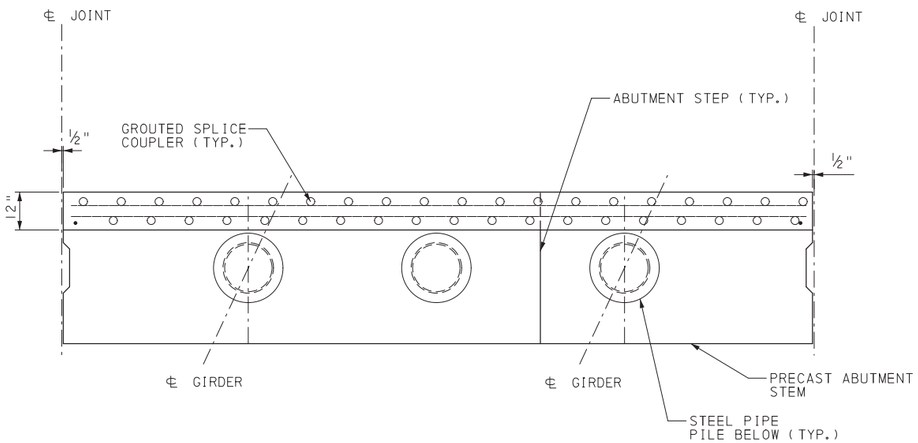

INTERIOR SEGMENT BACKWALL PLAN
WITH STEEL PIPE PILES

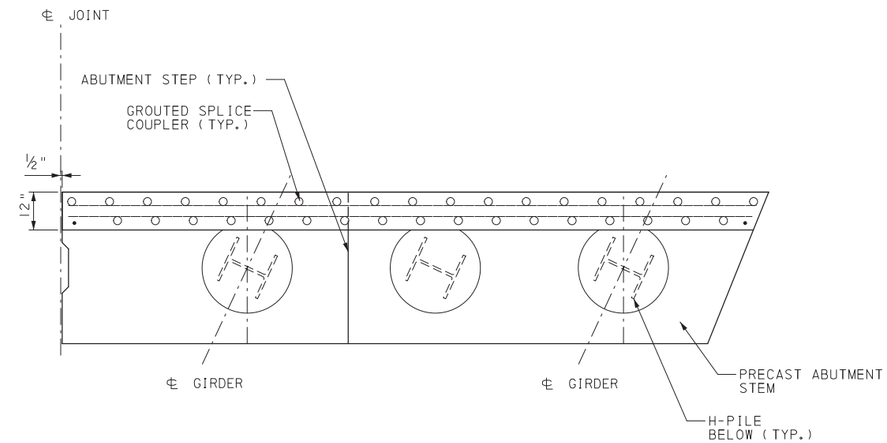

END SEGMENT BACKWALL PLAN
WITH STEEL H-PILES

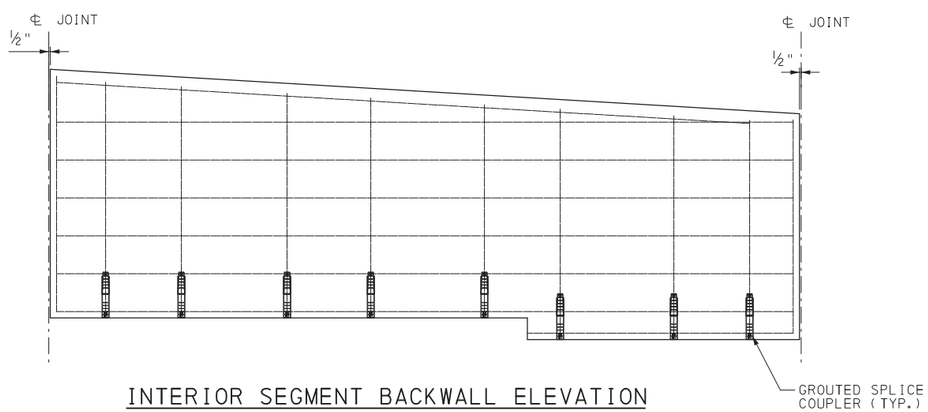

INTERIOR SEGMENT BACKWALL ELEVATION

NOTE: NOT ALL REINFORCING AND GROUTED SPLICE COUPLERS SHOWN

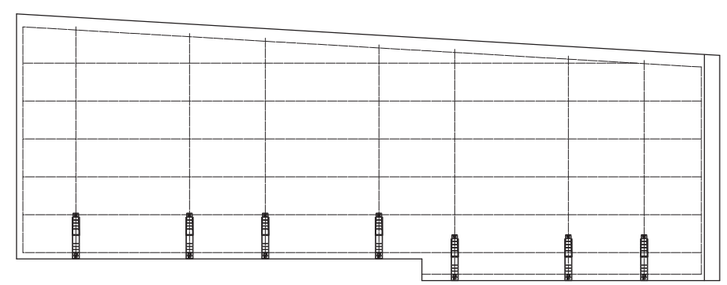

END SEGMENT BACKWALL ELEVATION

NOTE: NOT ALL REINFORCING AND GROUTED SPLICE COUPLERS SHOWN

PENNDOT DRAWING 12-603-BDTD 3 / 18 / 2013

MARK	DESCRIPTION	BY	CHK'D	RECM'D	DATE

REVISIONS

CENTRAL ATLANTIC BRIDGE ASSOCIATES (CABA)

BORTON-LAWSON
(570) 821-1999
WILKES-BARRE, PA

COMMONWEALTH OF PENNSYLVANIA
DEPARTMENT OF TRANSPORTATION

DATE:
SCALE: N/A

PRECAST CONCRETE
SUBSTRUCTURE STANDARDS

DWN: CK'D:
JOB NO:

PRECAST INTEGRAL ABUTMENT
BACKWALL DETAILS

SHEET NO:
IA-4

P:\1000-0301-00\DWGS\Int abutments - All 5 IA sheets.dgn
2/15/2013 AT 9:27:18 AM

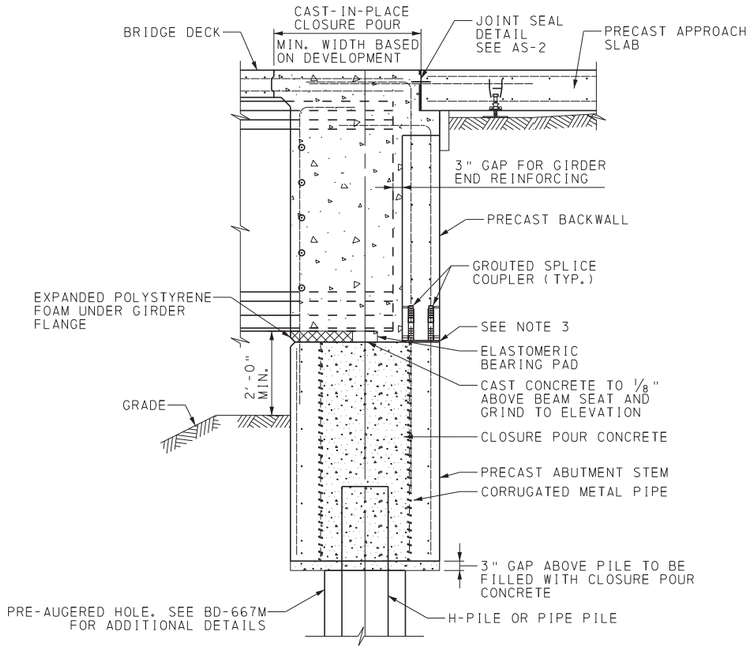

SECTION A-A: ABUTMENT

NOTES:
1. ALL ABUTMENT REINFORCEMENT NOT SHOWN FOR CLARITY.
2. MECHANICAL BAR SPLICERS MAY BE USED FOR BARS EXTENDING INTO CLOSURE POUR.
3. SEE TYPICAL WATERPROOFING DETAILS

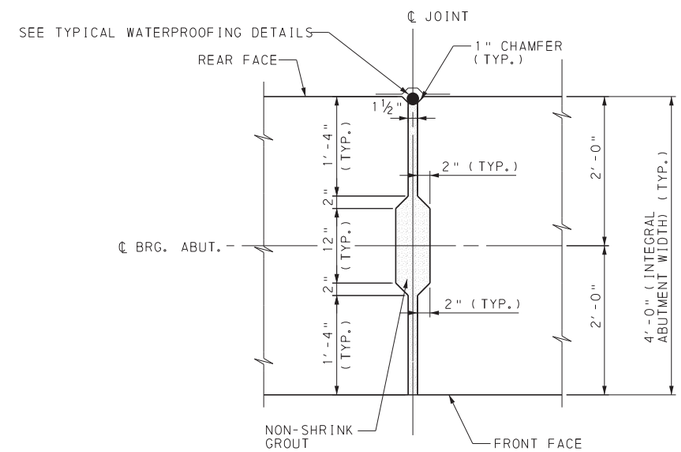

SECTION C-C: ABUTMENT STEM SHEAR KEY

NOTES:
1. ABUTMENT REINFORCEMENT NOT SHOWN FOR CLARITY
2. CONTRACTOR TO DESIGN FORM TO RETAIN KEY CONCRETE

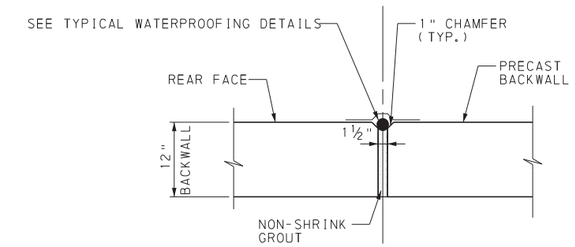

SECTION E-E: ABUTMENT BACKWALL JOINTS

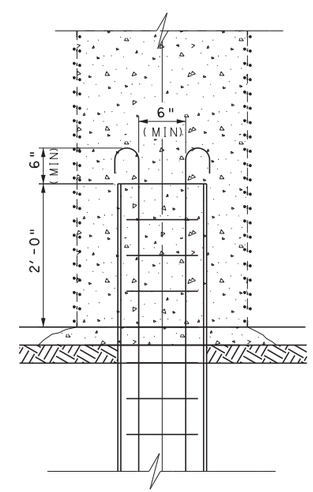

PIPE PILE CONNECTION TO PILE CAP

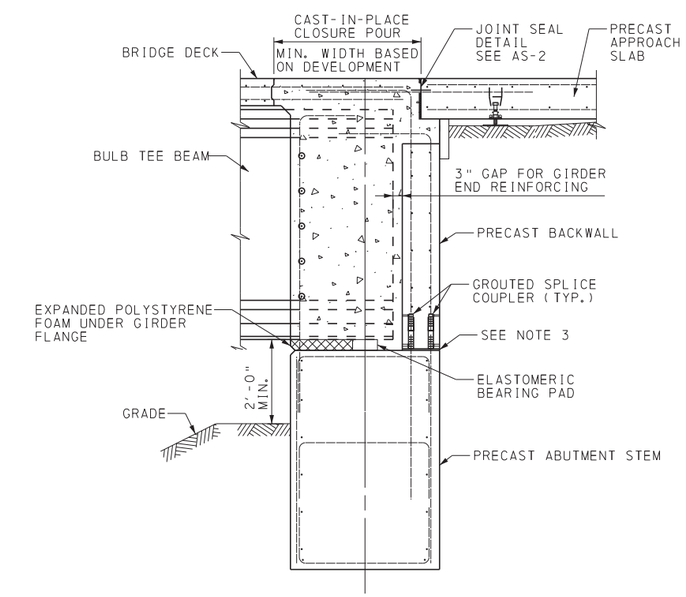

SECTION B-B: ABUTMENT

NOTES:
1. ALL ABUTMENT REINFORCEMENT NOT SHOWN FOR CLARITY.
2. MECHANICAL BAR SPLICERS MAY BE USED FOR BARS EXTENDING INTO CLOSURE POUR.
3. SEE TYPICAL WATERPROOFING DETAILS

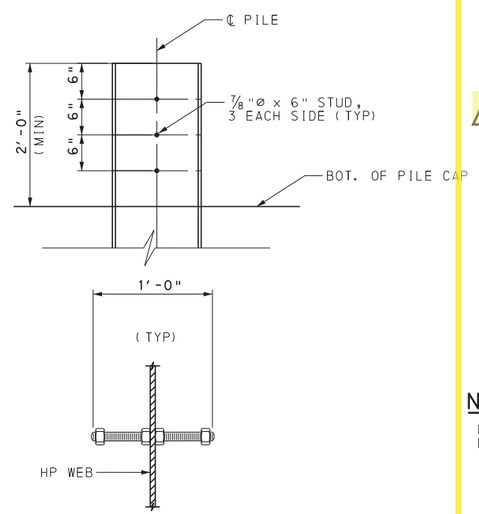

H-PILE CONNECTION TO PILE CAP

NOTES:
1. IN LIEU OF (6) STUDS, (3) ⅞"Ø x 1'-0" LONG, THREADED F1554 GRADE 36 ANCHOR RODS WITH (4) A563 GRADE A HEX NUTS MAY BE USED. HOLES SHALL BE DRILLED OR PUNCHED IN ACCORDANCE WITH 1105.03(c) OF PUB 408.

3 / 18 / 2013

NOTES:

FOR THE LOCATION OF SECTIONS A-A, B-B, C-C AND E-E, SEE SHEET IA-1.

PENNDOT DRAWING 12-603-BDTD, REV. 1

MARK	DESCRIPTION	BY	CHK'D	RECM'D	DATE
1	PILE CONNECTION	GL	KRS	TPM	5/14/15

REVISIONS

CENTRAL ATLANTIC BRIDGE ASSOCIATES (CABA)

BORTON-LAWSON (570) 821-1999 WILKES-BARRE, PA

COMMONWEALTH OF PENNSYVANIA
DEPARTMENT OF TRANSPORTATION

PRECAST CONCRETE SUBSTRUCTURE STANDARDS

PRECAST INTEGRAL ABUTMENT ABUTMENT SECTIONS

DATE:
SCALE: N/A
DWN: CK'D:
JOB NO:
SHEET NO: IA-5

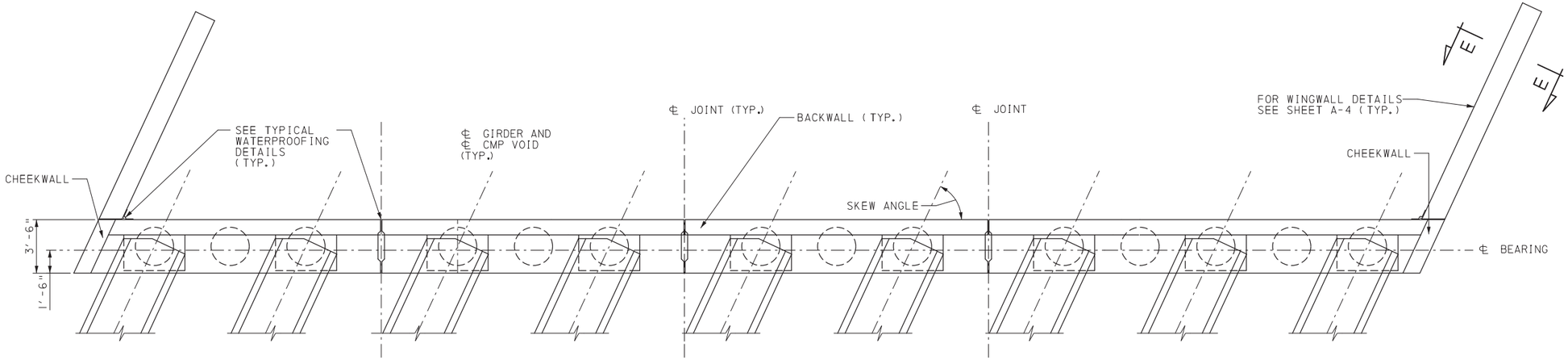

CANTILEVER ABUTMENT PLAN

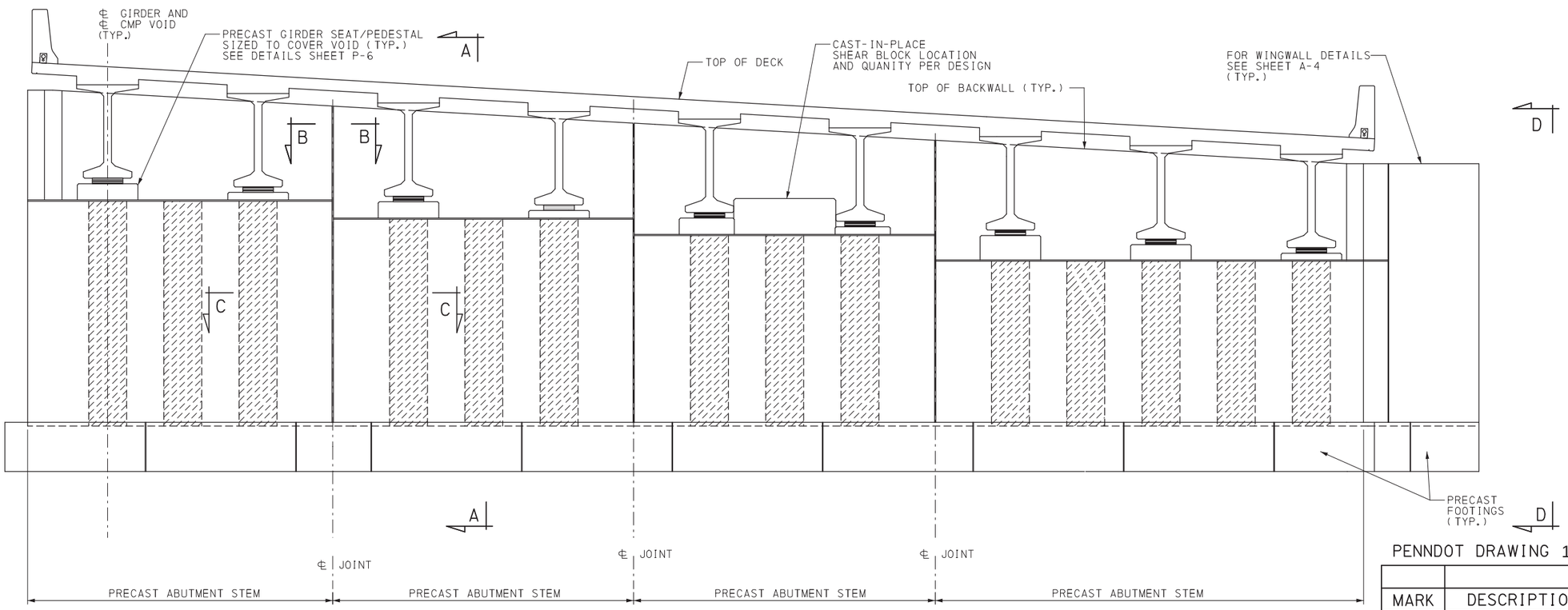

CANTILEVER ABUTMENT ELEVATION

NOTES:
1. END DIAPHRAGMS NOT SHOWN FOR CLARITY
2. HORIZONTAL JOINTS IN WALL STEMS PERMITTED WITH PRIOR APPROVAL FROM THE DEPARTMENT.
3. FOR SECTIONS A-A, B-B, AND C-C, SEE SHEET A-2.
4. FOR SECTIONS D-D AND E-E, SEE SHEET A-4.

PENNDOT DRAWING 12-603-BDTD 3/18/2013

MARK	DESCRIPTION	BY	CHK'D	RECM'D	DATE

REVISIONS

CENTRAL ATLANTIC BRIDGE ASSOCIATES (CABA)

BORTON-LAWSON (570) 821-1999 WILKES-BARRE, PA

COMMONWEALTH OF PENNSYLVANIA
DEPARTMENT OF TRANSPORTATION

DATE:
SCALE: N/A

PRECAST CONCRETE SUBSTRUCTURE STANDARDS

DWN: CK'D:
JOB NO:

PRECAST CANTILEVER ABUTMENT PLAN AND ELEVATION

SHEET NO: A-1

P:\1000-0301-00\DWGS\cont abutments - All 4 A sheets.dgn
2/15/2013 AT 9:27:19 AM

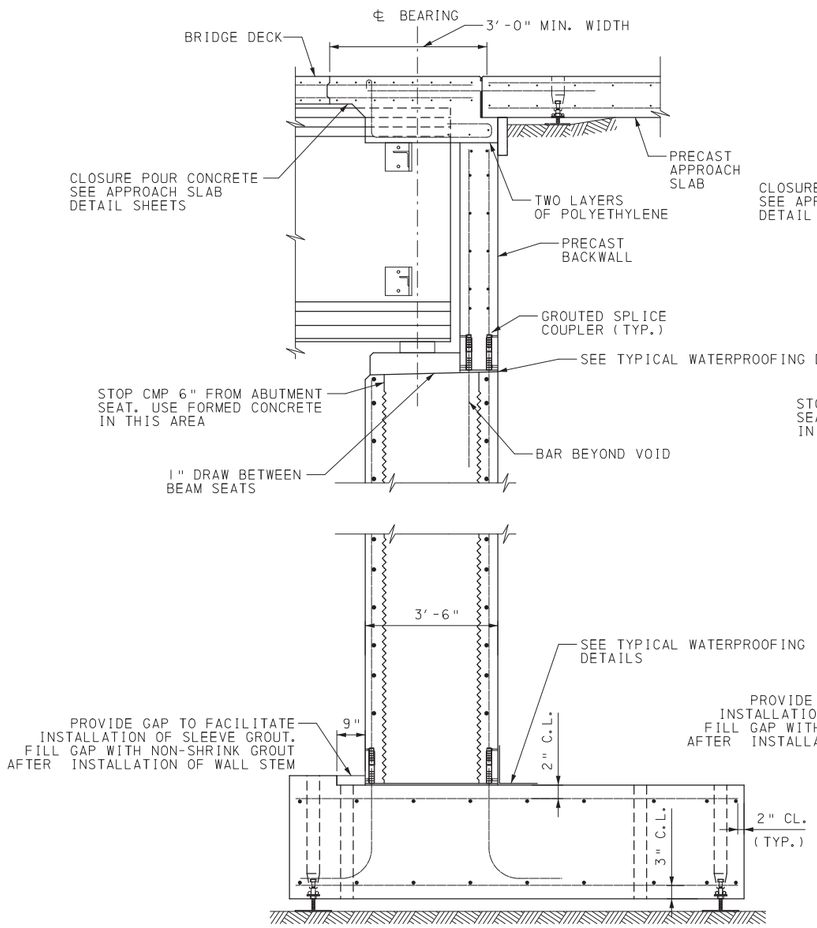

SECTION A-A: CANTILEVER ABUTMENT WITH PRESTRESSED CONCRETE GIRDER

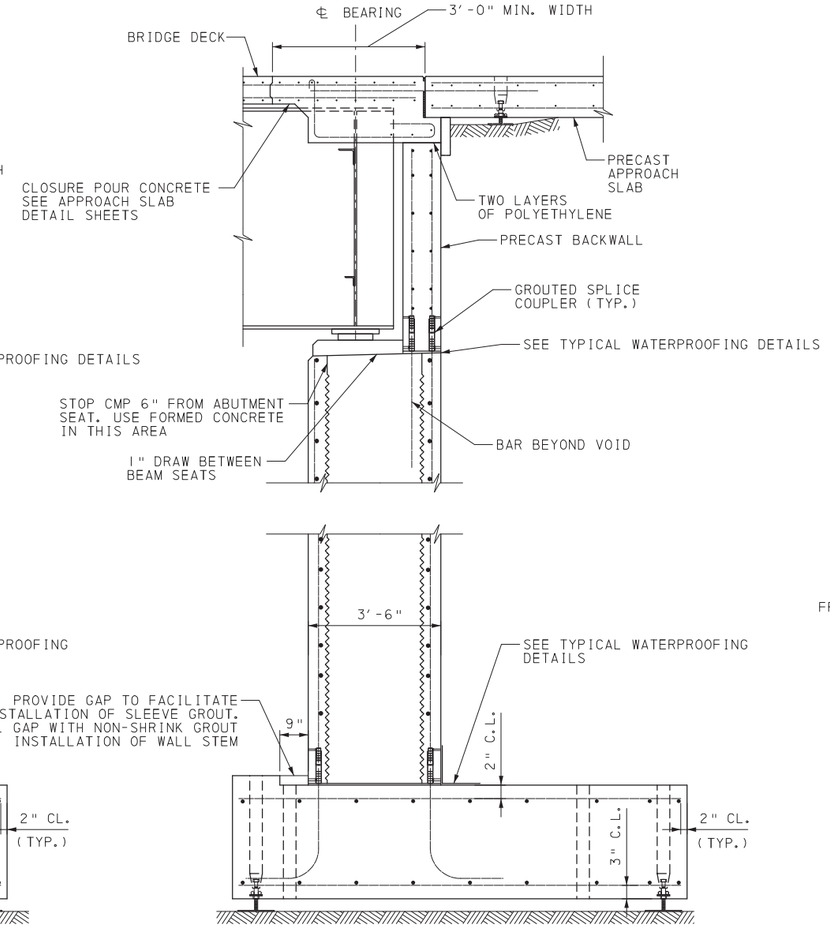

SECTION A-A: CANTILEVER ABUTMENT WITH STEEL GIRDER

NOTES:

1. FOR THE LOCATION OF SECTIONS A-A, B-B AND C-C, SEE SHEET A-1.

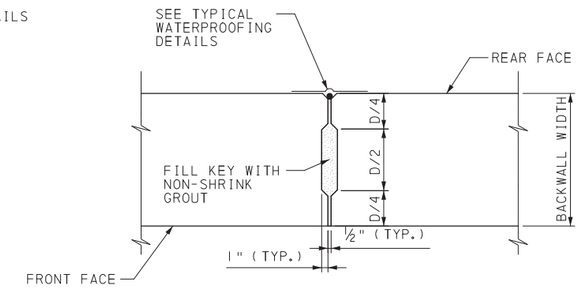

SECTION B-B: CANTILEVER ABUTMENT BACKWALL KEY

NOTE: BACKWALL REINFORCEMENT NOT SHOWN FOR CLARITY

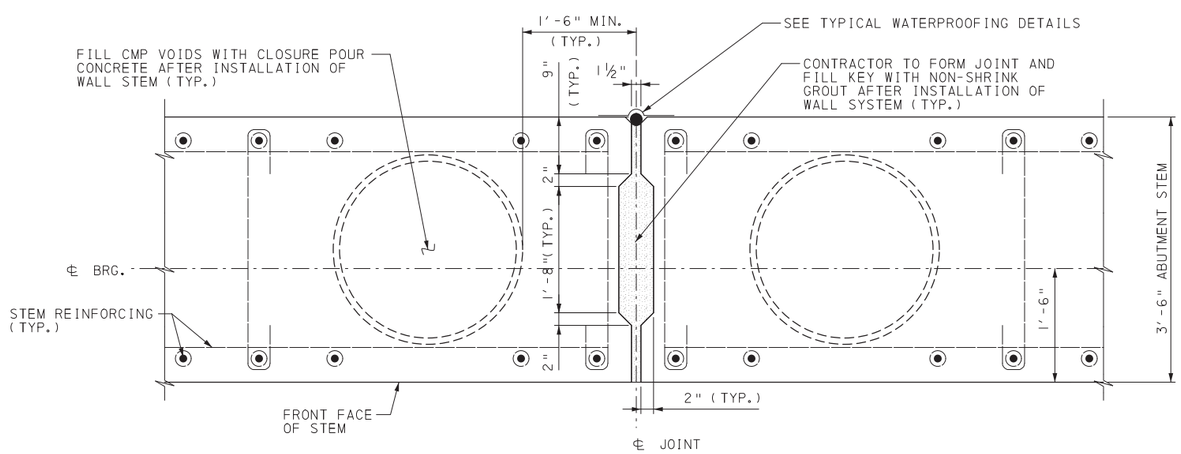

SECTION C-C: TYPICAL CANTILEVER ABUTMENT STEM SHEAR KEY

NOTE: ABUTMENT REINFORCEMENT NOT SHOWN FOR CLARITY

PENNDOT DRAWING 12-603-BDTD 3/18/2013

MARK	DESCRIPTION	BY	CHK'D	RECM'D	DATE

REVISIONS

CENTRAL ATLANTIC BRIDGE ASSOCIATES (CABA)

BORTON-LAWSON (570) 821-1999 WILKES-BARRE, PA

COMMONWEALTH OF PENNSYLVANIA
DEPARTMENT OF TRANSPORTATION

DATE:
SCALE: N/A

PRECAST CONCRETE SUBSTRUCTURE STANDARDS

DWN: CK'D:
JOB NO:

PRECAST CANTILEVER ABUTMENT SECTIONS AND DETAILS

SHEET NO: A-2

P:\1000-0301-00\DWGS\cant abutments - All 4 A sheets.dgn
2/15/2013 AT 9:27:19 AM

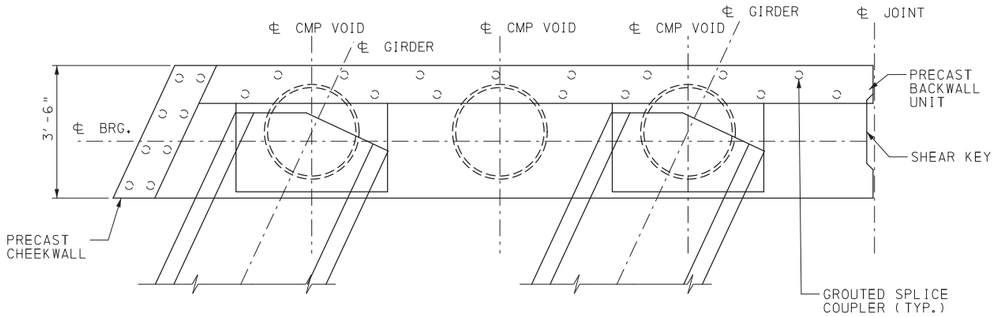

CANTILEVER END ABUTMENT BLOCK PLAN

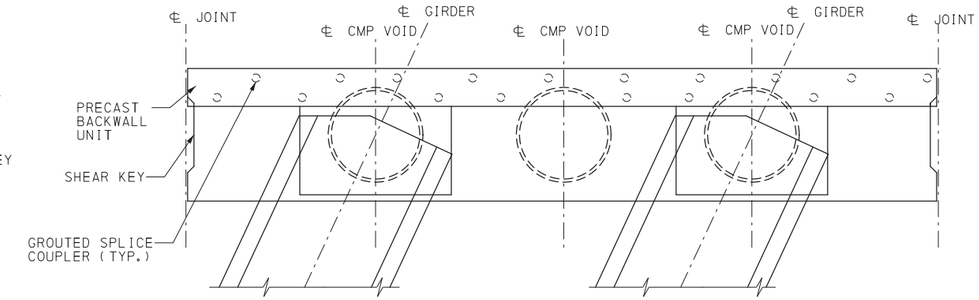

CANTILEVER MIDDLE ABUTMENT BLOCK PLAN

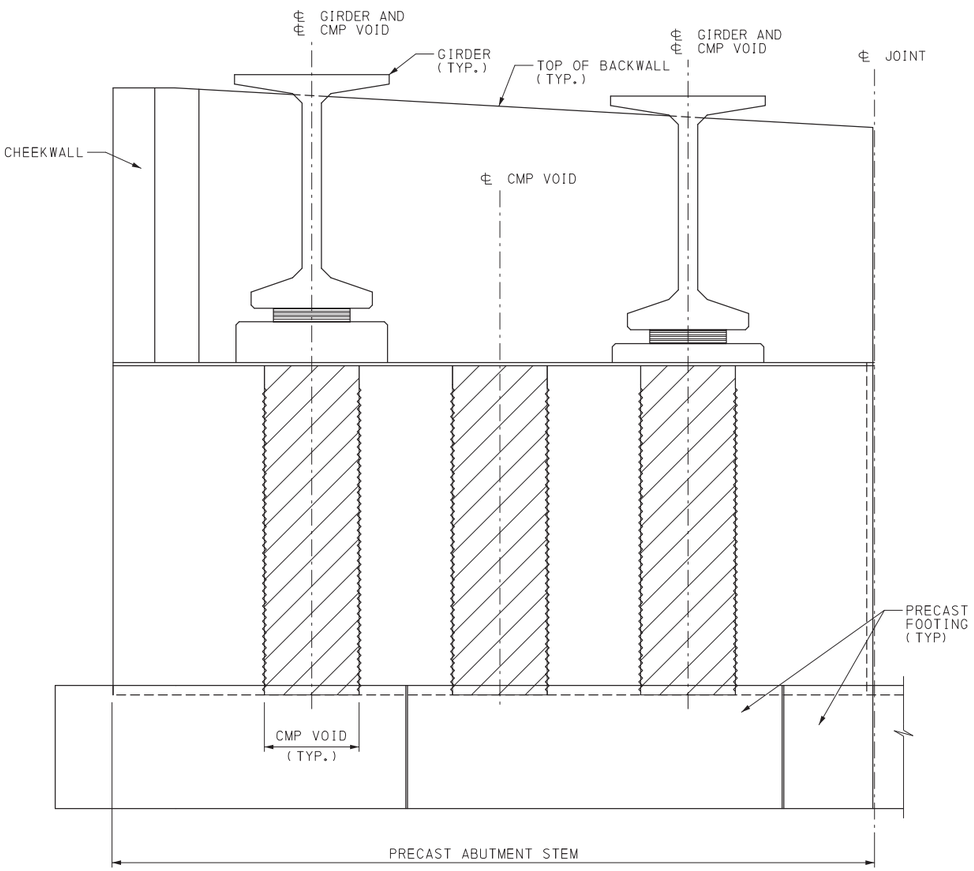

CANTILEVER END ABUTMENT BLOCK ELEVATION

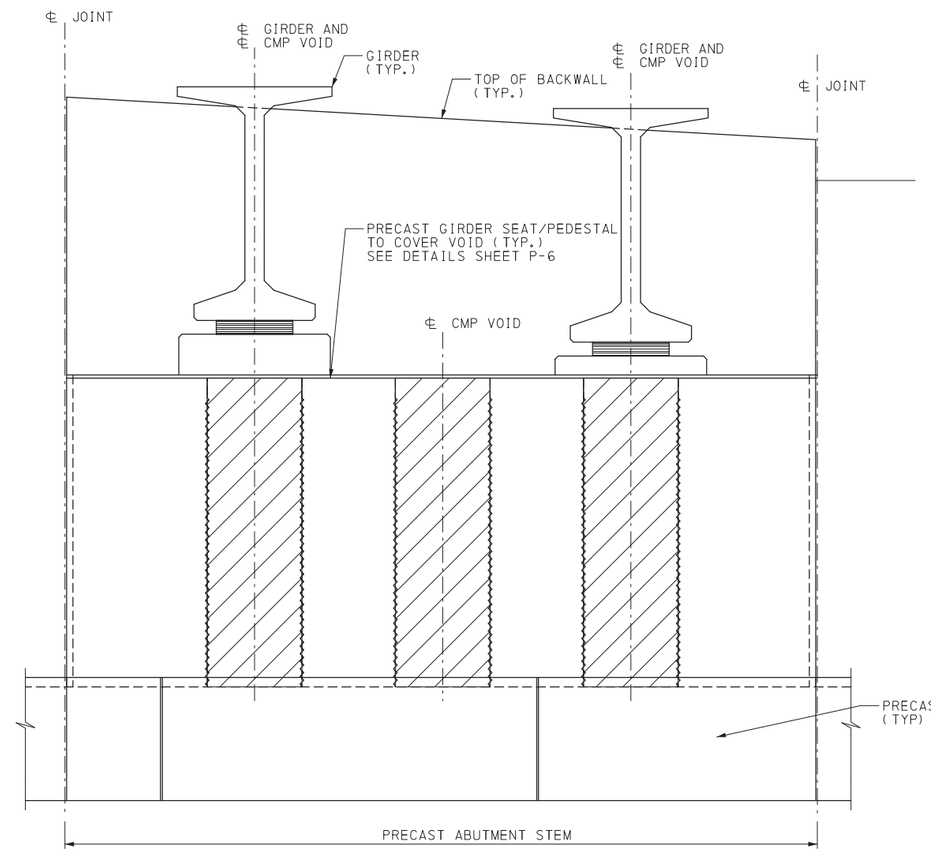

CANTILEVER MIDDLE ABUTMENT BLOCK ELEVATION

PENNDOT DRAWING 12-603-BDTD 3 / 18 / 2013

MARK	DESCRIPTION	BY	CHK'D	RECM'D	DATE

REVISIONS

CENTRAL ATLANTIC BRIDGE ASSOCIATES (CABA)

BORTON-LAWSON
(570) 821-1999
WILKES-BARRE, PA

COMMONWEALTH OF PENNSYLVANIA
DEPARTMENT OF TRANSPORTATION

DATE:
SCALE: N/A

PRECAST CONCRETE SUBSTRUCTURE STANDARDS

DWN: CK'D:
JOB NO:

PRECAST CANTILEVER ABUTMENT DETAILS I

SHEET NO: A-3

P:\1000-0301-00\DWGS\cant abutments - All 4 A sheets.dgn
2/15/2013 AT 9:27:19 AM

NOTES:

1. FOR THE LOCATION OF SECTIONS D-D AND E-E, SEE SHEET A-1.

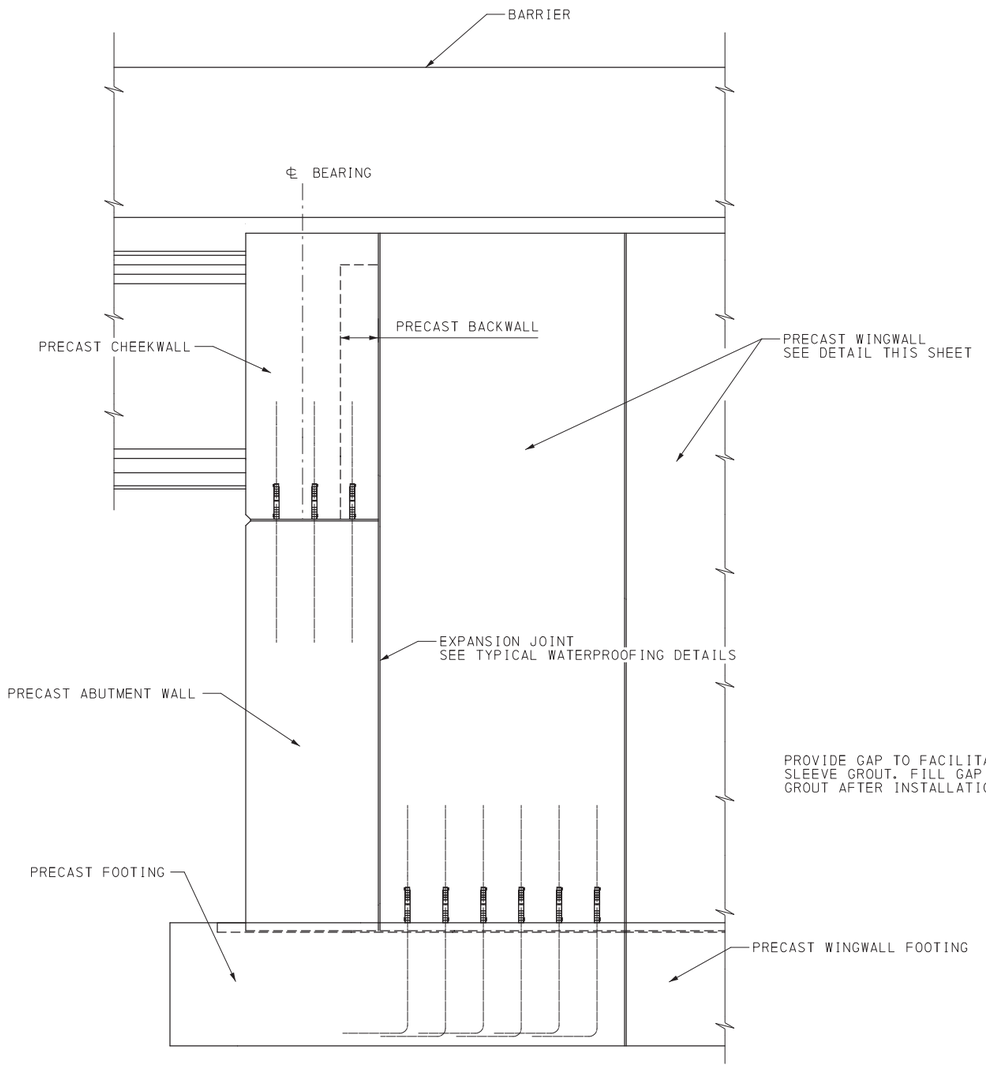

SECTION D-D: CANTILEVER ABUTMENT WITH PRESTRESSED CONCRETE GIRDER

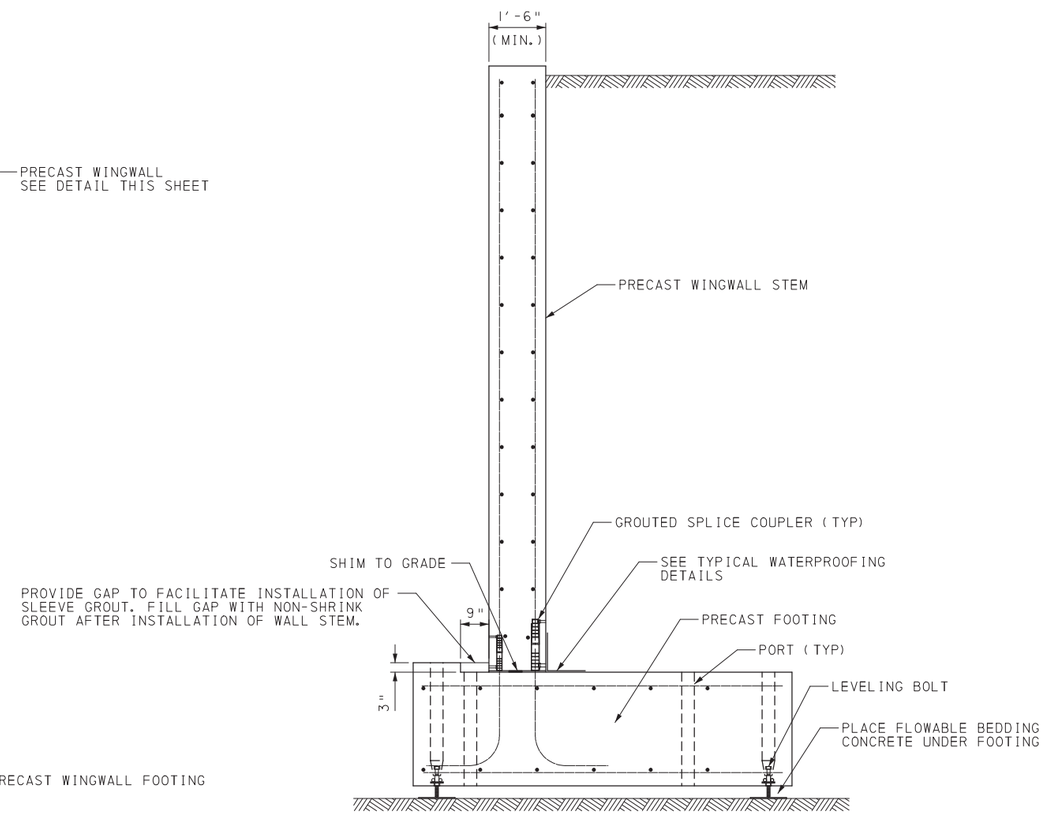

SECTION E-E: PRECAST WINGWALL

NOTE: APPROACH SLAB NOT SHOWN

PENNDOT DRAWING 12-603-BDTD 3/18/2013

MARK	DESCRIPTION	BY	CHK'D	RECM'D	DATE

REVISIONS

CENTRAL ATLANTIC BRIDGE ASSOCIATES (CABA)

BORTON-LAWSON
(570) 821-1999
WILKES-BARRE, PA

COMMONWEALTH OF PENNSYLVANIA
DEPARTMENT OF TRANSPORTATION

DATE:
SCALE: N/A

PRECAST CONCRETE SUBSTRUCTURE STANDARDS

DWN: CK'D:
JOB NO:

PRECAST CANTILEVER ABUTMENT WINGWALL DETAILS

SHEET NO: A-4

P:\1000-0301-00\DWGS\cant abutments - All 4 A sheets.dgn
2/15/2013 AT 9:27:20 AM

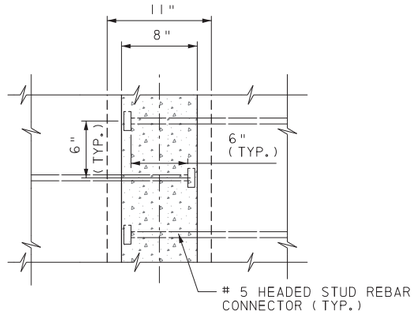

LONGITUDINAL JOINT PLAN OPTION 1

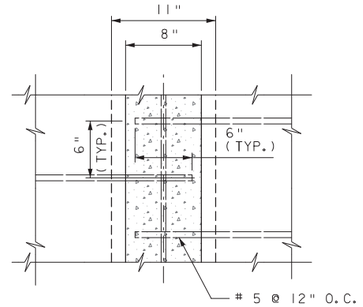

SECTION D-D:
LONGITUDINAL JOINT PLAN OPTION 2

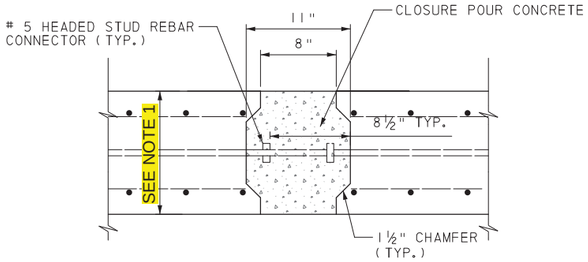

SECTION D-D:
LONGITUDINAL JOINT OPTION 1

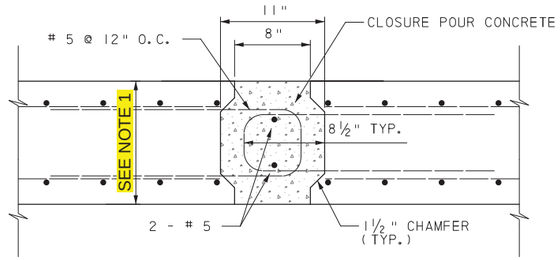

SECTION D-D:
LONGITUDINAL JOINT OPTION 2

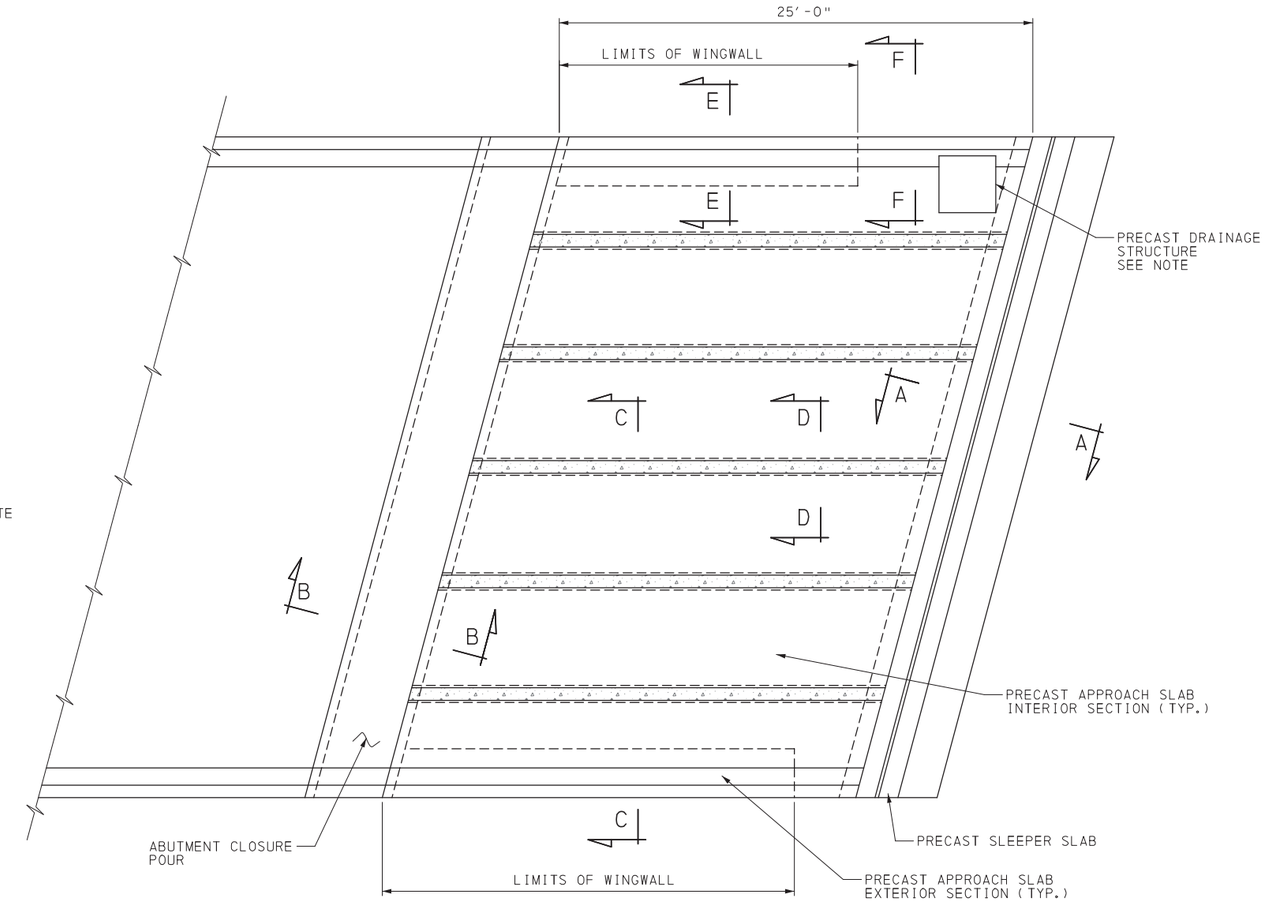

APPROACH SLAB PLAN

NOTE: PRECAST DRAINAGE STRUCTURE, FRAME, AND GRATE TO BE PAID FOR UNDER SEPARATE ITEMS.

NOTE:
1. APPROACH SLAB THICKNESS IN ACCORDANCE WITH BD-628M OR A SMALLER THICKNESS MAY BE USED IF CONFIRMED BY DESIGN COMPUTATIONS WHICH TAKE INTO ACCOUNT THE HIGHER CONCRETE STRENGTH OF PRECAST CONCRETE.

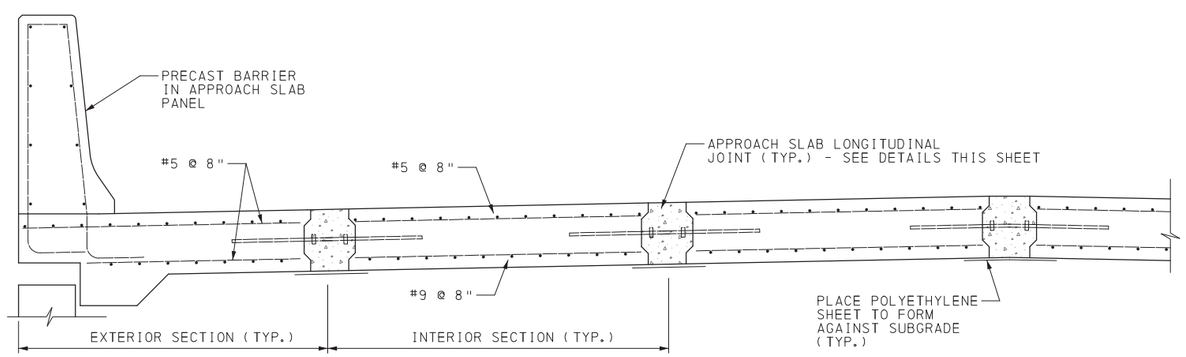

SECTION C-C: TYPICAL APPROACH SLAB

CORRECTIONS TO THE SLAB THICKNESS INDICATED WITH YELLOW HIGHLIGHTING MADE BY BRIDGE DESIGN AND TECHNOLOGY DIVISION ON 7-30-14 AFTER COMMUNICATION WITH STANDARD DEVELOPER.

PENNDOT DRAWING 12-603-BDTD 3/18/2013

MARK	DESCRIPTION	BY	CHK'D	RECM'D	DATE

REVISIONS

CENTRAL ATLANTIC BRIDGE ASSOCIATES (CABA)

BORTON-LAWSON
(570) 821-1999
WILKES-BARRE, PA

COMMONWEALTH OF PENNSYLVANIA
DEPARTMENT OF TRANSPORTATION

DATE:
SCALE: N/A

PRECAST CONCRETE SUBSTRUCTURE STANDARDS

DWN: CK'D:
JOB NO:

PRECAST APPROACH SLAB TYPICAL DETAILS 1

SHEET NO: AS-1

P:\1000-0301-00\DWGS\AS-1 to AS-4 approach slab.dgn
2/15/2013 AT 9:27:21 AM

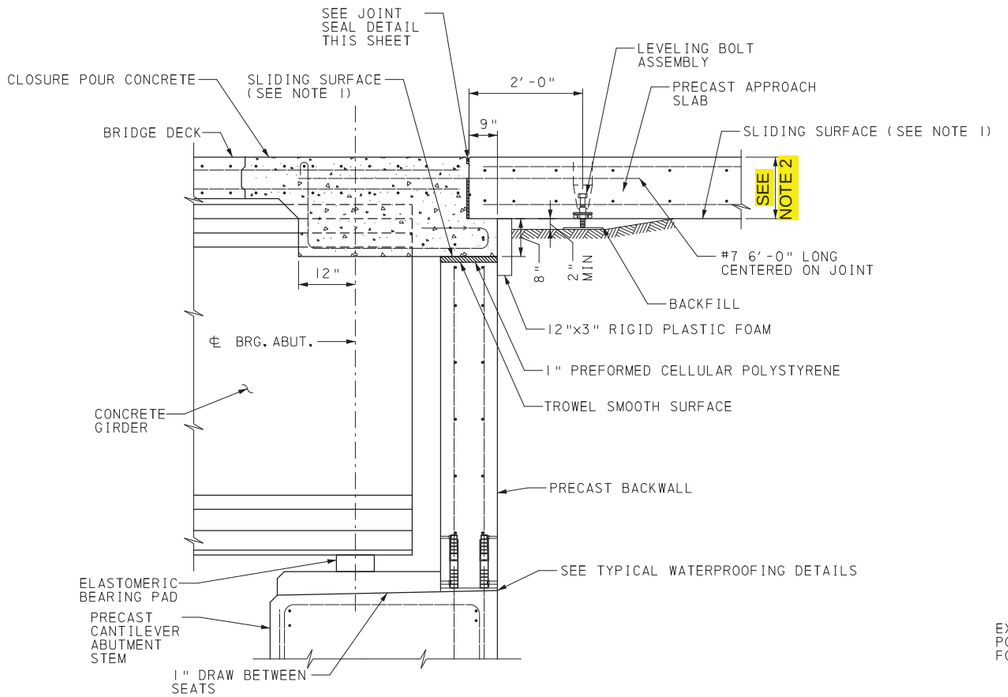

SECTION B-B: CANTILEVER ABUTMENT

NOTE: CONCRETE GIRDER SHOWN STEEL BEAM SIMILAR.

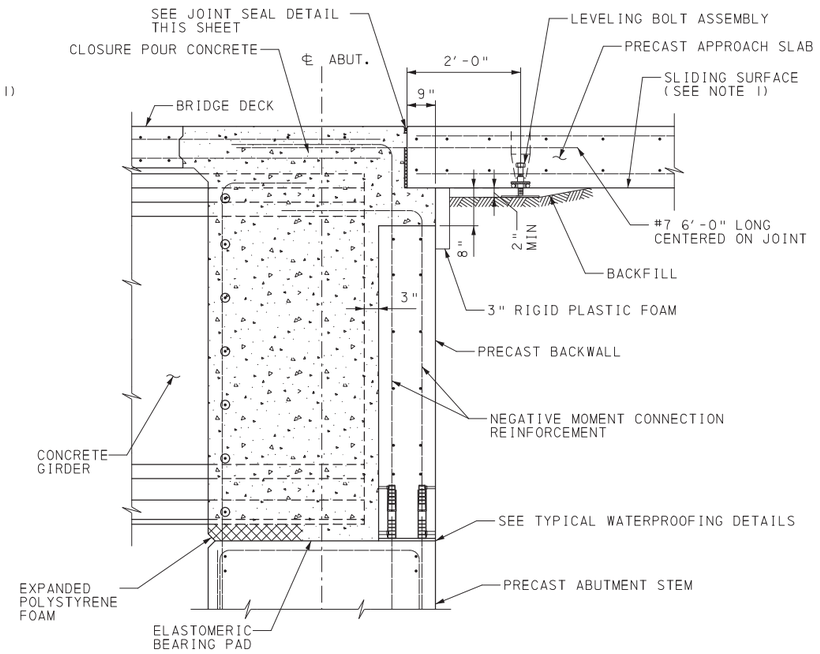

SECTION B-B: INTEGRAL ABUTMENT

NOTE: CONCRETE GIRDER SHOWN STEEL BEAM SIMILAR.

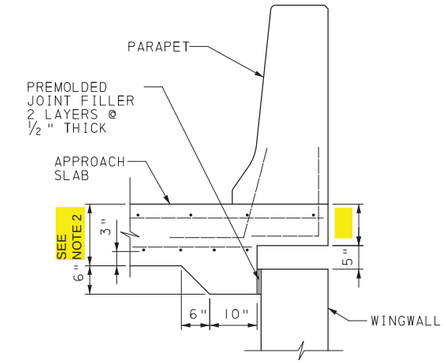

SECTION E-E

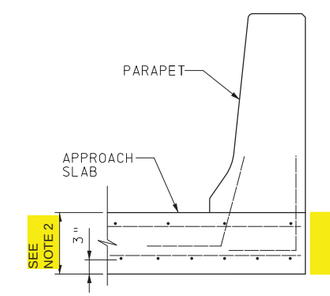

SECTION F-F

NOTE:
2. APPROACH SLAB THICKNESS IN ACCORDANCE WITH BD-628M OR A SMALLER THICKNESS MAY BE USED IF CONFIRMED BY DESIGN COMPUTATIONS WHICH TAKE INTO ACCOUNT THE HIGHER CONCRETE STRENGTH OF PRECAST CONCRETE.

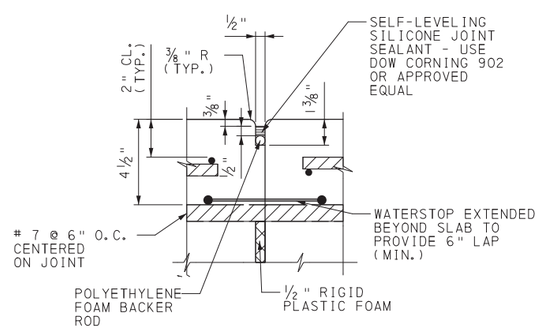

JOINT SEAL JOINT
CLOSURE POUR

CORRECTIONS TO THE SLAB THICKNESS INDICATED WITH YELLOW HIGHLIGHTING MADE BY BRIDGE DESIGN AND TECHNOLOGY DIVISION ON 7-30-14 AFTER COMMUNICATION WITH STANDARD DEVELOPER.

NOTES

1. 2 LAYERS OF 4 MIL. POLYETHYLENE SHEETING. PROVIDE 2'-0" GAP FROM REAR FACE OF BACKWALL IN POLYETHYLENE SHEETING ALONG BACKWALL TO ALLOW FOR DRAINAGE.

PENNDOT DRAWING 12-603-BDTD 3 / 18 / 2013

MARK	DESCRIPTION	BY	CHK'D	RECM'D	DATE

REVISIONS

CENTRAL ATLANTIC BRIDGE ASSOCIATES (CABA)

BORTON-LAWSON
(570) 821-1999
WILKES-BARRE, PA

COMMONWEALTH OF PENNSYLVANIA
DEPARTMENT OF TRANSPORTATION

DATE:
SCALE: N/A

PRECAST CONCRETE SUBSTRUCTURE STANDARDS

DWN: CK'D:
JOB NO:

PRECAST APPROACH SLAB TYPICAL DETAILS 2

SHEET NO: AS-2

P:\1000-0301-00\DWGS\AS-1 to AS-4 approach slab.dgn
2/15/2013 AT 9:27:21 AM

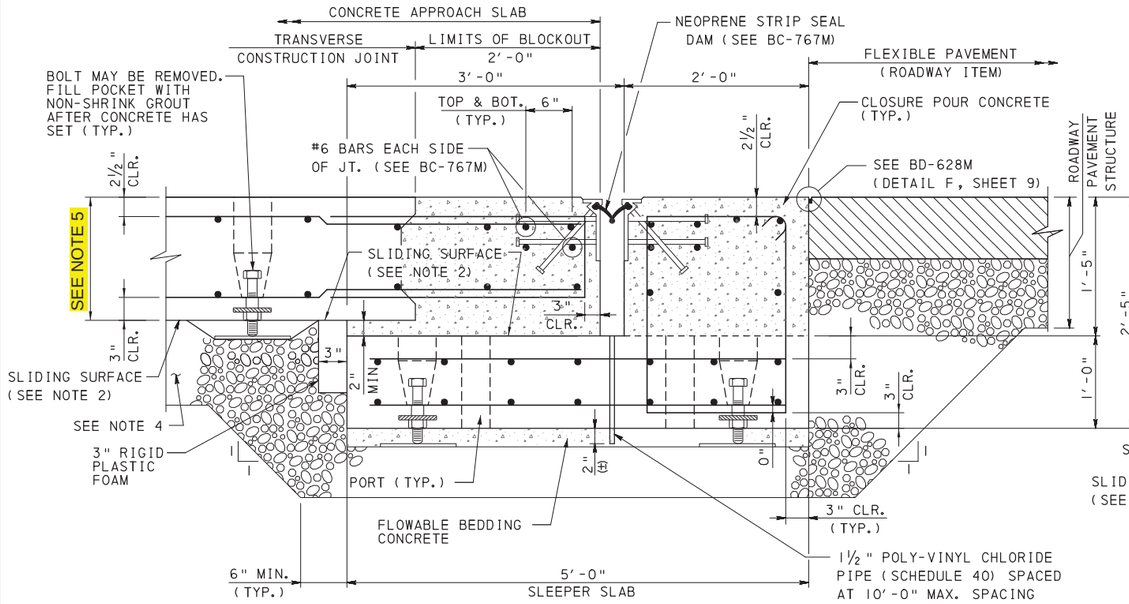

SECTION A-A
SLEEPER SLAB - DETAIL 1

END OF APPROACH SLAB WITH NEOPRENE STRIP SEAL DAM ADJACENT TO FLEXIBLE PAVEMENT

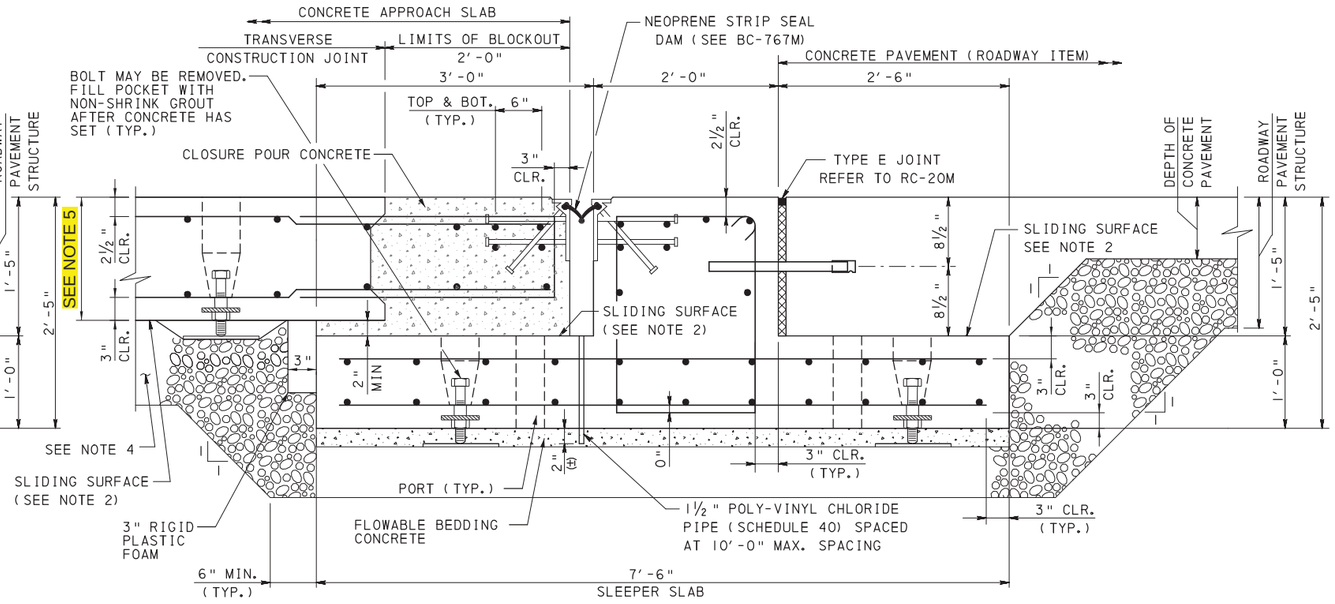

SECTION A-A
SLEEPER SLAB - DETAIL 2

END OF APPROACH SLAB WITH NEOPRENE STRIP SEAL DAM ADJACENT TO CONCRETE PAVEMENT (SEE NOTE 3)

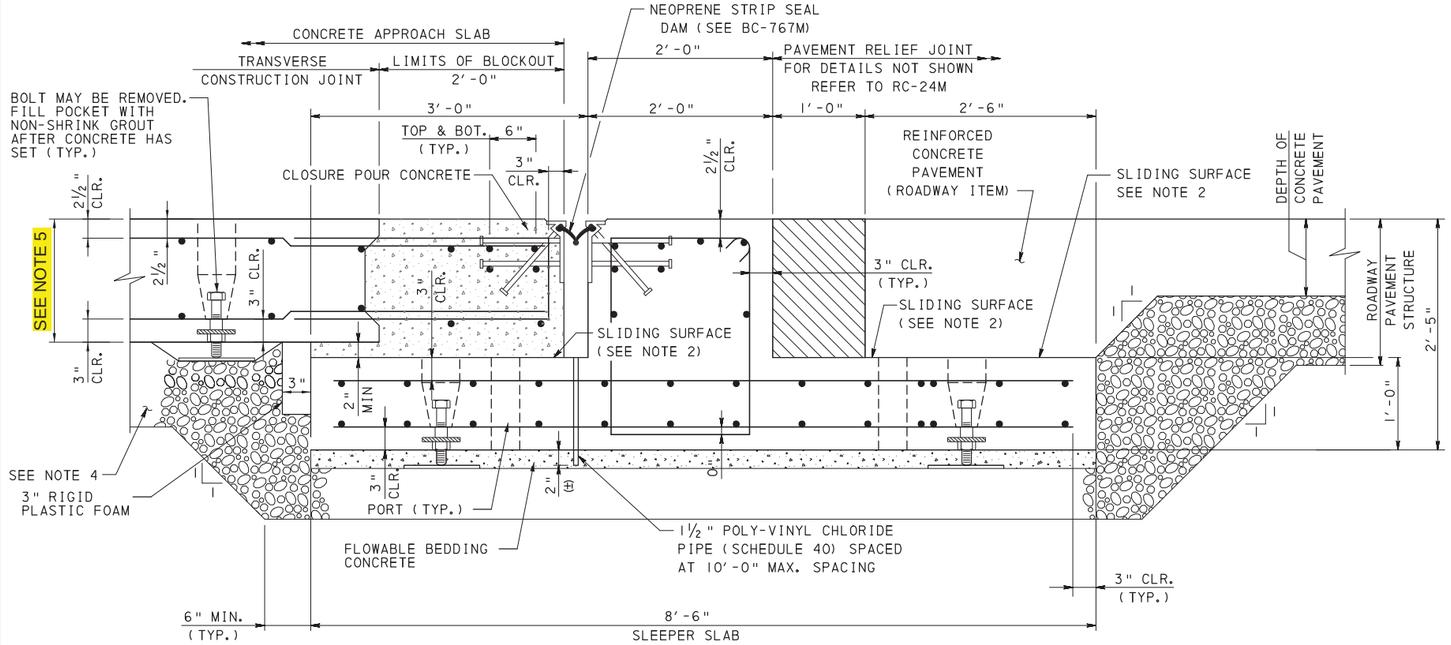

SECTION A-A
SLEEPER SLAB - DETAIL 3

END OF APPROACH SLAB WITH NEOPRENE STRIP SEAL DAM ADJACENT TO PAVEMENT RELIEF JOINT

CORRECTIONS TO THE SLAB THICKNESS INDICATED WITH YELLOW HIGHLIGHTING MADE BY BRIDGE DESIGN AND TECHNOLOGY DIVISION ON 7-30-14 AFTER COMMUNICATION WITH STANDARD DEVELOPER.

NOTES

1. FOR NOTES, SEE BD-628M SHEETS 1 AND 2.
2. TROWEL SMOOTH AND PLACE 2 LAYERS OF 4 MIL. POLYETHYLENE SHEETING AS BOND BREAKER.
3. USE DETAIL 2 ONLY WHEN LIMITED MOVEMENT IS ANTICIPATED IN THE ROADWAY OTHERWISE USE DETAIL 3. REFER TO RC-24M FOR ADDITIONAL INFORMATION.
4. USE EPOXY BONDING COMPOUND WHERE EVER CAST-IN-PLACE CEMENT CONCRETE COMES IN CONTACT WITH PRECAST CEMENT CONCRETE. THE EPOXY BONDING COMPOUND IS TYPE 2, GRADE 2, AS DESCRIBED IN ASTM-C881-90.
5. APPROACH SLAB THICKNESS IN ACCORDANCE WITH BD-628M OR A SMALLER THICKNESS MAY BE USED IF CONFIRMED BY DESIGN COMPUTATIONS WHICH TAKE INTO ACCOUNT THE HIGHER CONCRETE STRENGTH OF PRECAST CONCRETE.

PENNDOT DRAWING 12-603-BDTD 3/18/2013

MARK	DESCRIPTION	BY	CHK'D	RECM'D	DATE
	REVISIONS				

CENTRAL ATLANTIC BRIDGE ASSOCIATES (CABA)

BORTON-LAWSON (570) 821-1999 WILKES-BARRE, PA

COMMONWEALTH OF PENNSYLVANIA
DEPARTMENT OF TRANSPORTATION

DATE:
SCALE: N/A

PRECAST CONCRETE SUBSTRUCTURE STANDARDS

DWN: CK'D:
JOB NO:

PRECAST APPROACH SLAB TYPICAL DETAILS 3

SHEET NO: AS-3

P:\1000-0301-00\DWGS\AS-1 to AS-4 approach slab.dgn
2/15/2013 AT 9:27:21 AM

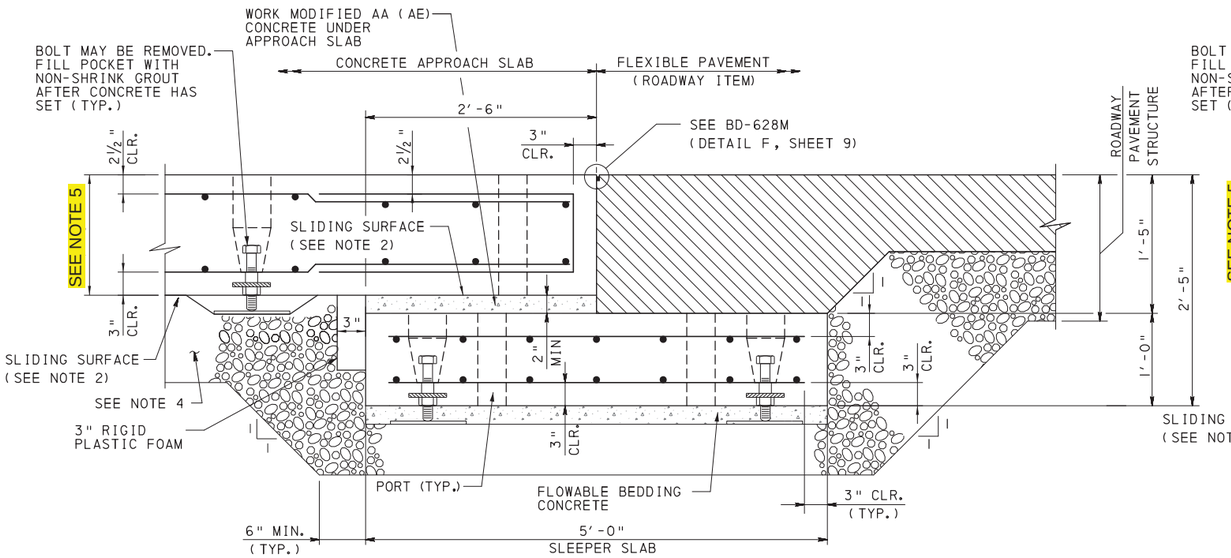

SECTION A-A
SLEEPER SLAB - DETAIL 3

END OF APPROACH SLAB
ADJACENT TO FLEXIBLE PAVEMENT

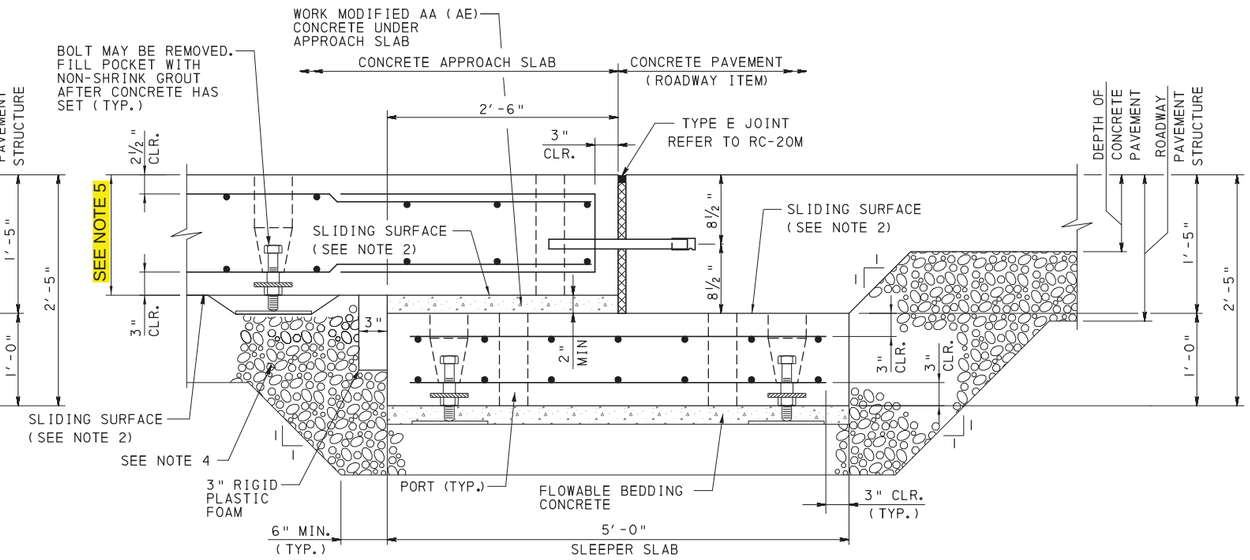

SECTION A-A
SLEEPER SLAB - DETAIL 4

END OF APPROACH SLAB
ADJACENT TO CONCRETE PAVEMENT
(SEE NOTE 3)

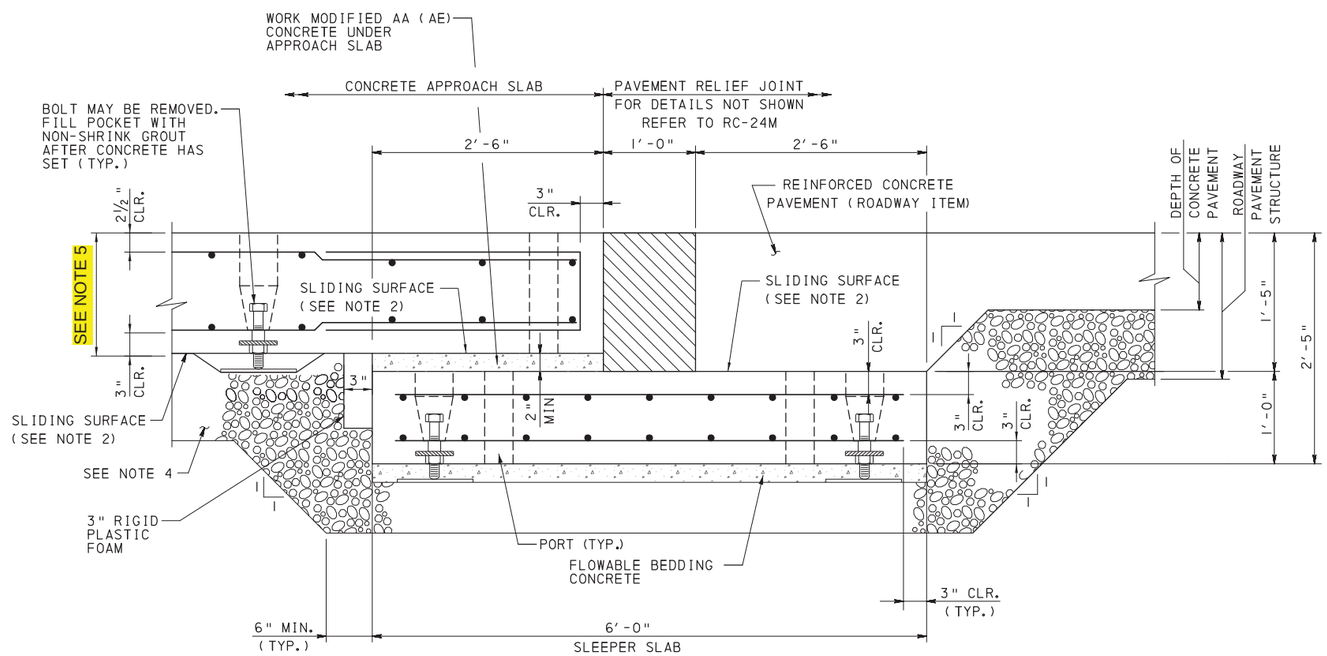

SECTION A-A
SLEEPER SLAB - DETAIL 5

END OF APPROACH SLAB
ADJACENT TO PAVEMENT RELIEF JOINT

CORRECTIONS TO THE SLAB THICKNESS INDICATED WITH YELLOW HIGHLIGHTING MADE BY BRIDGE DESIGN AND TECHNOLOGY DIVISION ON 7-30-14 AFTER COMMUNICATION WITH STANDARD DEVELOPER.

NOTES

1. FOR NOTES, SEE BD-628M SHEETS 1 AND 2.
2. TROWEL SMOOTH AND PLACE 2 LAYERS OF 4 MIL. POLYETHYLENE SHEETING AS BOND BREAKER.
3. USE DETAIL 5 ONLY WHEN LIMITED MOVEMENT IS ANTICIPATED IN THE ROADWAY OTHERWISE USE DETAIL 6. REFER TO RC-24M FOR ADDITIONAL INFORMATION.
4. STRUCTURAL BACKFILL, REFER TO RC-12M.
5. APPROACH SLAB THICKNESS IN ACCORDANCE WITH BD-628M OR A SMALLER THICKNESS MAY BE USED IF CONFIRMED BY DESIGN COMPUTATIONS WHICH TAKE INTO ACCOUNT THE HIGHER CONCRETE STRENGTH OF PRECAST CONCRETE.

PENNDOT DRAWING 12-603-BDTD 3/18/2013

MARK	DESCRIPTION	BY	CHK'D	RECM'D	DATE
REVISIONS					

CENTRAL ATLANTIC BRIDGE ASSOCIATES (CABA)

BORTON-LAWSON
(570) 821-1999
WILKES-BARRE, PA

COMMONWEALTH OF PENNSYLVANIA
DEPARTMENT OF TRANSPORTATION

DATE:
SCALE: N/A

PRECAST CONCRETE SUBSTRUCTURE STANDARDS

DWN: CK'D:
JOB NO:

PRECAST APPROACH SLAB TYPICAL DETAILS 4

SHEET NO: AS-4

P:\1000-0301-00\DWGS\AS-1 to AS-4 approach slab.dgn
2/15/2013 AT 9:27:22 AM

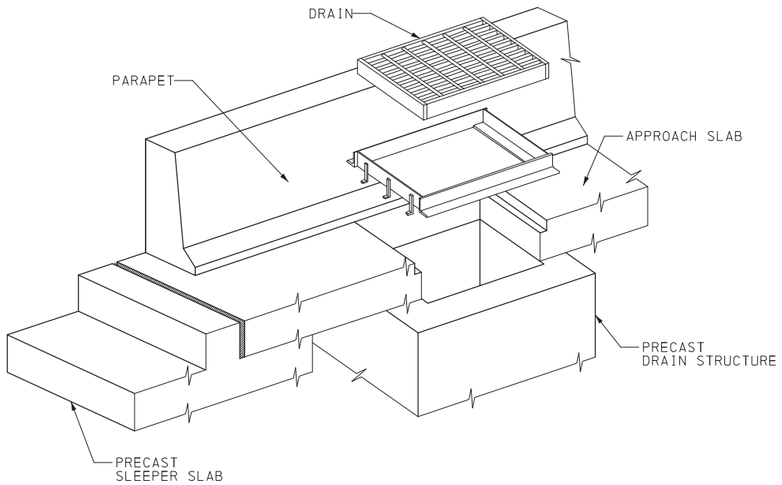

APPROACH SLAB DRAIN
ISOMETRIC VIEW

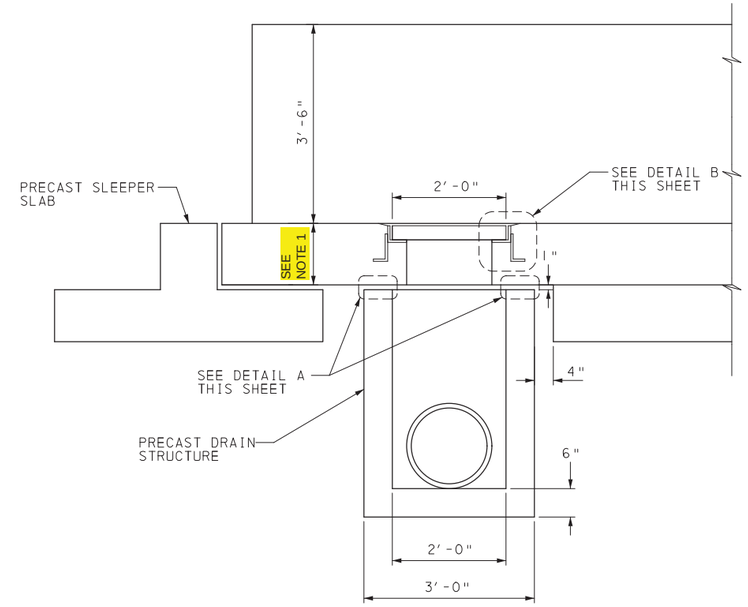

SECTION A-A: TYPICAL LONGITUDINAL
APPROACH SLAB DRAIN

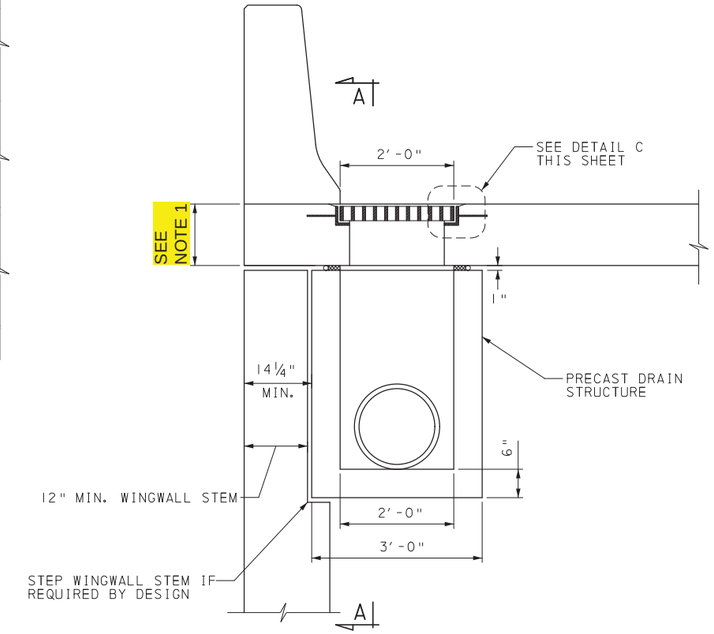

TYPICAL TRANVERSE SECTION
APPROACH SLAB DRAIN

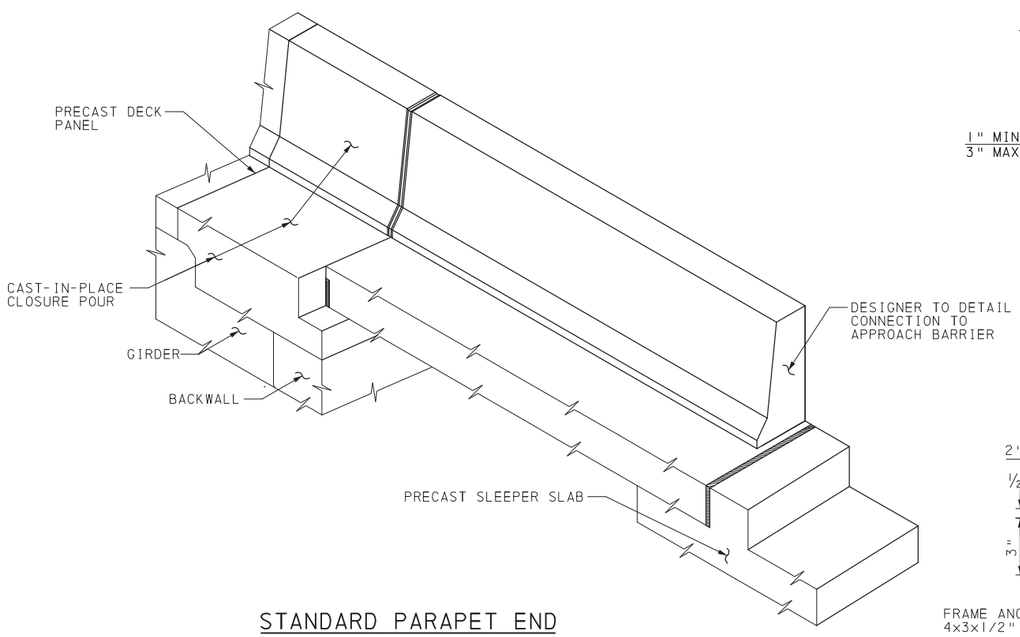

STANDARD PARAPET END
ISOMETRIC VIEW

NOTE: CONNECTION TO APPROACH SLAB NOT SHOWN

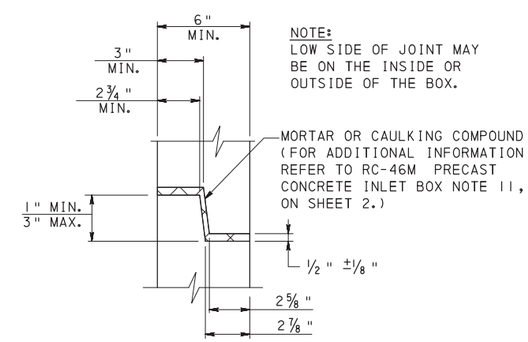

NOTE:
LOW SIDE OF JOINT MAY BE ON THE INSIDE OR OUTSIDE OF THE BOX.

MORTAR OR CAULKING COMPOUND (FOR ADDITIONAL INFORMATION, REFER TO RC-46M PRECAST CONCRETE INLET BOX NOTE 11, ON SHEET 2.)

OPTION 1
(SHIPLAP JOINT)

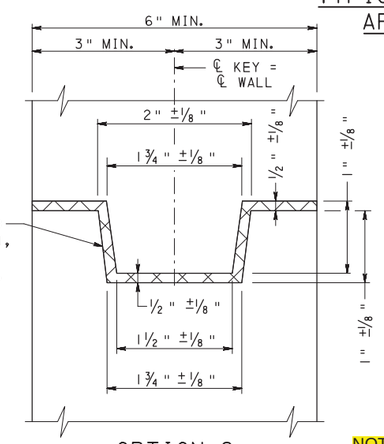

OPTION 2
(KEYED JOINT)

DETAIL A

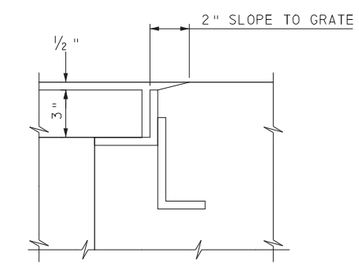

DETAIL B

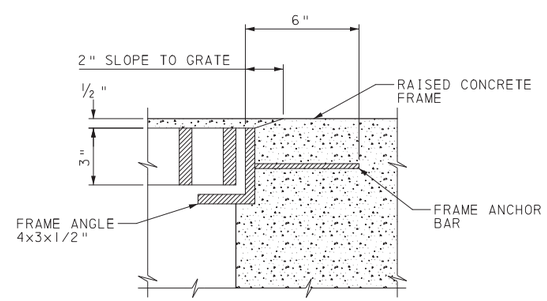

DETAIL C

CORRECTIONS TO THE SLAB THICKNESS INDICATED WITH YELLOW HIGHLIGHTING MADE BY BRIDGE DESIGN AND TECHNOLOGY DIVISION ON 7-30-14 AFTER COMMUNICATION WITH STANDARD DEVELOPER.

NOTE:
1. APPROACH SLAB THICKNESS IN ACCORDANCE WITH BD-628M OR A SMALLER THICKNESS MAY BE USED IF CONFIRMED BY DESIGN COMPUTATIONS WHICH TAKE INTO ACCOUNT THE HIGHER CONCRETE STRENGTH OF PRECAST CONCRETE.

PENNDOT DRAWING 12-603-BDTD 3 / 18 / 2013

MARK	DESCRIPTION	BY	CHK'D	RECM'D	DATE

REVISIONS

CENTRAL ATLANTIC BRIDGE ASSOCIATES (CABA)

BORTON-LAWSON
(570) 821-1999
WILKES-BARRE, PA

COMMONWEALTH OF PENNSYLVANIA
DEPARTMENT OF TRANSPORTATION

DATE:
SCALE: N/A

PRECAST CONCRETE SUBSTRUCTURE STANDARDS

DWN: CK'D:
JOB NO:

PRECAST APPROACH SLAB TYPICAL DETAILS 5

SHEET NO: AS-5

P:\1000-0301-00\DWGS\AS-5 Approach Slab Drain and Parapet end Details 2.dgn
2/15/2013 AT 9:27:23 AM

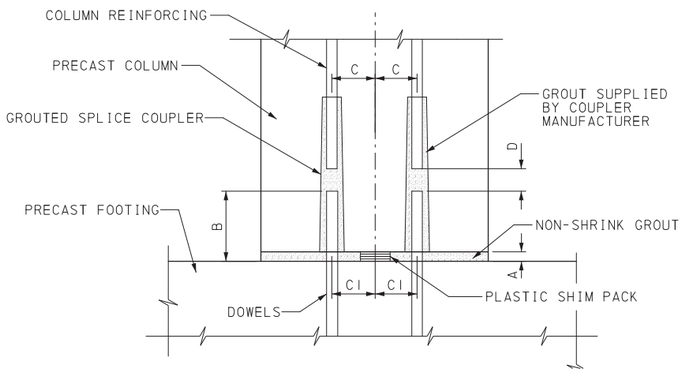

GROUTED SPLICE COUPLER DETAILS

NOTES:
1. USE MATCHING TEMPLATES FOR THE LOCATION OF COLUMN REINFORCEMENT AND GROUTED SPLICE COUPLER PLACEMENT WITHIN THE ELEMENTS TO CONTROL CRITICAL DIMENSIONS "C" AND "C1", WHICH WOULD BE IDENTICAL.
2. CONSULT MANUFACTURER OF THE GROUTED SPLICE COUPLER FOR PROPER DIMENSIONS "B" AND "D" AND FOR TOLERANCE ON THESE DIMENSIONS.
3. BEFORE EXECUTING GROUTED SPLICE COUPLER ASSEMBLIES, ALWAYS SEEK INSTALLATION RECOMMENDATIONS FROM THE MANUFACTURER OF THE GROUTED SPLICE COUPLER USED.

GROUTED SPLICE COUPLER TOLERANCES

A	SHIM PACK HEIGHT	3/4" ± 3/8"
B	DOWEL HEIGHT	CONSULT MANUFACTURER
C C1	LOCATION OF COLUMN REINFORCING, GROUTED SPLICE COUPLER, AND FOOTING DOWELS MEASURED FROM A COMMON REFERENCE POINT	± 1/4"
D	GAP BETWEEN DOWELS AND COLUMN REINFORCING	CONSULT MANUFACTURER

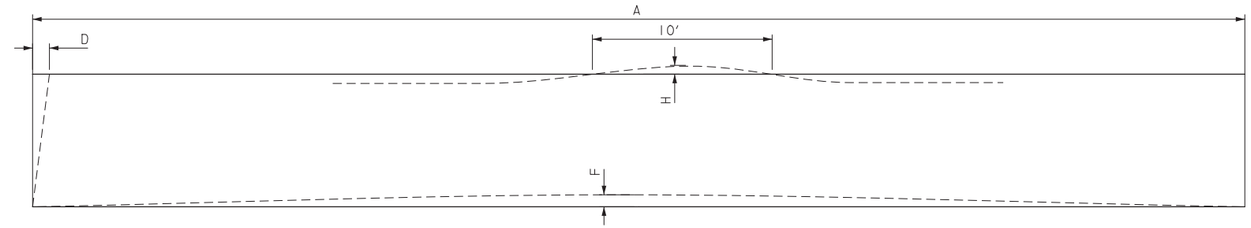

PLAN

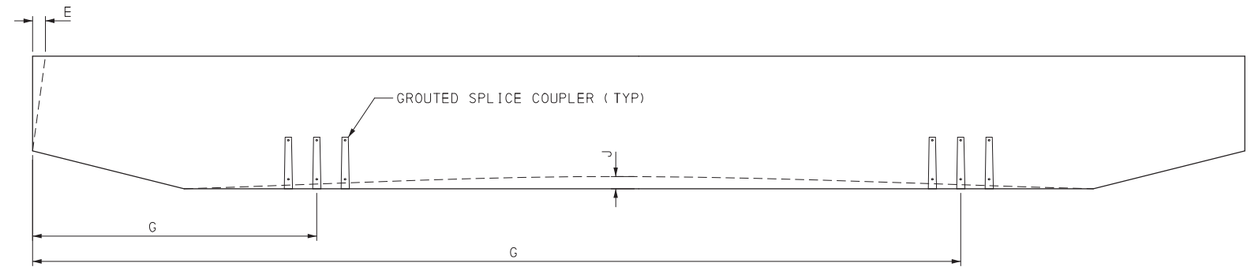

ELEVATION

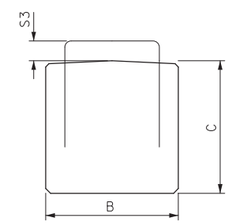

SECTION

BENT CAP FABRICATION TOLERANCES

A	LENGTH	+ 3/4"
B	WIDTH (OVERALL)	± 1/4"
C	DEPTH (OVERALL)	± 1/4"
D	VARIATION FROM SPECIFIED PLAN END SQUARENESS OR SKEW	± 1/8" PER 12 INCH WIDTH ± 1/2" MAXIMUM
E	VARIATION FROM SPECIFIED ELEVATION END SQUARENESS OR SKEW	± 1/8" PER 12 INCH WIDTH ± 1/2" MAXIMUM
F	SWEEP, FOR MEMBER LENGTH: UP TO 40 FEET 40 FEET TO 60 FEET OVER 60 FEET	 ± 1/4" ± 1/2" ± 5/8"
G	LOCATION OF GROUTED SPLICE COUPLER MEASURED FROM A COMMON REFERENCE POINT	± 1/4"
H	LOCAL SMOOTHNESS OF ANY SURFACE	± 1/4" IN 10 FEET
J	VARIATION FROM SPECIFIED CAMBER	+ 1/8" PER 10 FEET + 1/2" MAXIMUM
S3	STIRRUP PROJECTION FROM CAP SURFACE	+ 1/4", - 1/2"

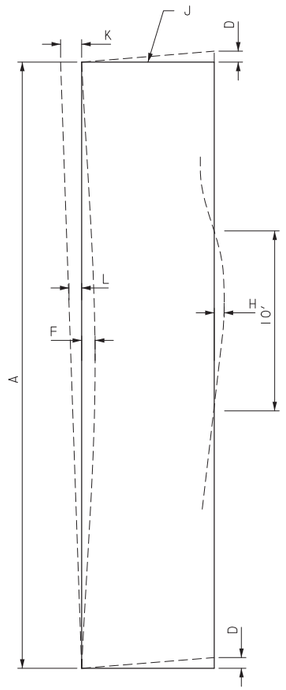

ELEVATION

COLUMN FABRICATION TOLERANCES

A	LENGTH	±1/2"
B	WIDTH (OVERALL)	±1/4"
C	DEPTH (OVERALL)	±1/4"
D	VARIATION FROM SPECIFIED END SQUARENESS OR SKEW	±1/8" PER 12 INCH WIDTH ±3/8" MAXIMUM
F	SWEEP, FOR MEMBER LENGTH:	±1/8" PER 10 FEET ±1/2" MAXIMUM
G	LOCATION OF GROUTED SPLICE COUPLER MEASURED FROM A COMMON REFERENCE POINT	±1/4"
H	LOCAL SMOOTHNESS OF ANY SURFACE	±1/4" IN 10 FEET

COLUMN ERECTION TOLERANCES

J	TOP ELEVATION FROM NOMINAL TOP ELEVATION MAXIMUM LOW MAXIMUM HIGH	 1/2" 1/4"
K	MAXIMUM PLUMB VARIATION OVER HEIGHT OF COLUMN	1/2"
L	PLUMB IN ANY 10 FEET OF COLUMN HEIGHT	1/4"

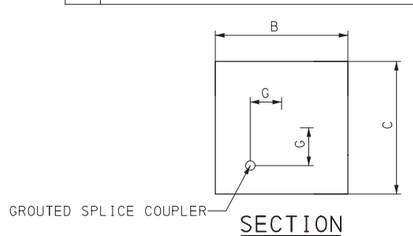

SECTION

PENNDOT DRAWING 12-603-BDTD 3/18/2013

MARK	DESCRIPTION	BY	CHK'D	RECM'D	DATE

REVISIONS

CENTRAL ATLANTIC BRIDGE ASSOCIATES (CABA)

BORTON-LAWSON
(570) 821-1999
WILKES-BARRE, PA

COMMONWEALTH OF PENNSYLVANIA
DEPARTMENT OF TRANSPORTATION

DATE:
SCALE: N/A

PRECAST CONCRETE SUBSTRUCTURE STANDARDS

DWN: CK'D:
JOB NO:

TOLERANCES FOR PRECAST ELEMENTS
BENT CAP ELEMENTS

SHEET NO: T-1

P:\1000-0301-00\DWGS\TI_PIER TOLERANCES.dgn
2/15/2013 AT 9:27:23 AM

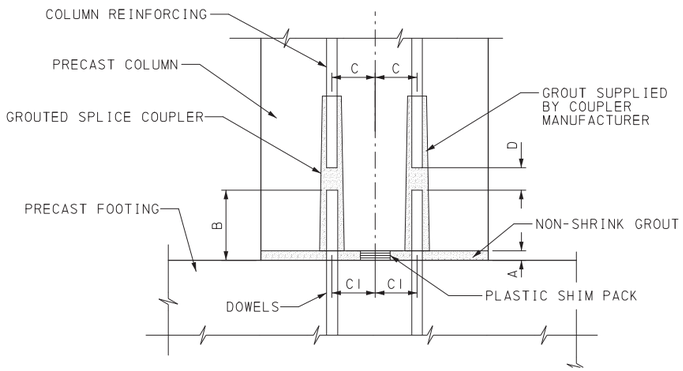

GROUTED SPLICE COUPLER DETAILS

NOTES:
1. USE MATCHING TEMPLATES FOR THE LOCATION OF COLUMN REINFORCEMENT AND GROUTED SPLICE COUPLER PLACEMENT WITHIN THE ELEMENTS TO CONTROL CRITICAL DIMENSIONS "C" AND "C1", WHICH WOULD BE IDENTICAL.
2. CONSULT MANUFACTURER OF THE GROUTED SPLICE COUPLER FOR PROPER DIMENSIONS "B" AND "D" AND FOR TOLERANCE ON THESE DIMENSIONS.
3. BEFORE EXECUTING GROUTED SPLICE COUPLER ASSEMBLIES, ALWAYS SEEK INSTALLATION RECOMMENDATIONS FROM THE MANUFACTURER OF THE GROUTED SPLICE COUPLER USED.

GROUTED SPLICE COUPLER TOLERANCES

A	SHIM PACK HEIGHT	3/4" ± 3/8"
B	DOWEL HEIGHT	CONSULT MANUFACTURER
C C1	LOCATION OF COLUMN REINFORCING, GROUTED SPLICE COUPLER, AND FOOTING DOWELS MEASURED FROM A COMMON REFERENCE POINT	± 1/4"
D	GAP BETWEEN DOWELS AND COLUMN REINFORCING	CONSULT MANUFACTURER

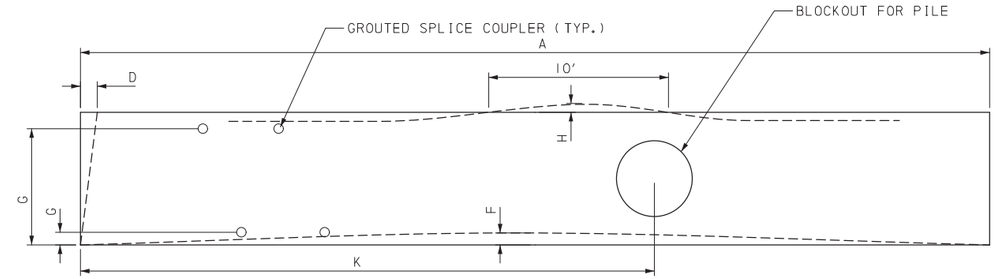

PLAN

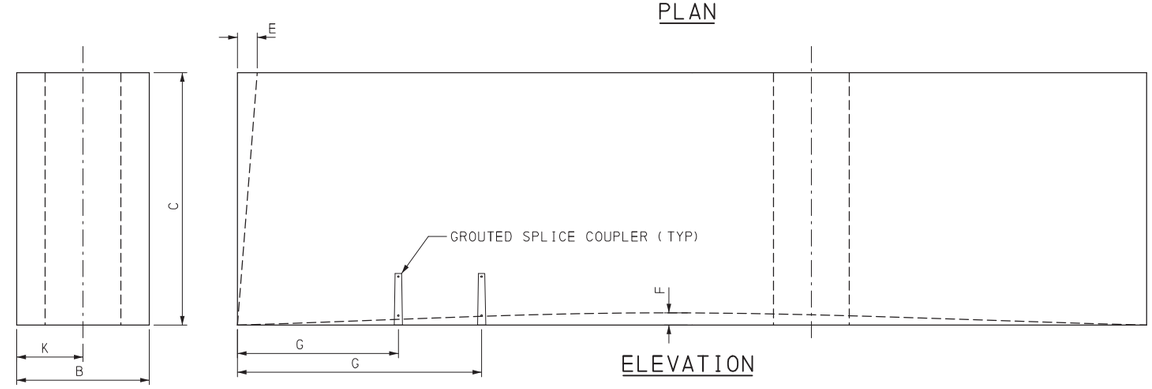

ELEVATION

NOTE: THESE TOLERANCES APPLY TO THE FOLLOWING ELEMENTS:
* INTEGRAL ABUTMENT STEMS
* CANTILEVER ABUTMENT STEMS
* ABUTMENT BACKWALLS
* CANTILEVER RETAINING WALLS

WALL PANEL FABRICATION TOLERANCES

A	LENGTH	± 1/4"
B	WIDTH (OVERALL)	± 1/4"
C	DEPTH (OVERALL)	± 1/4"
D	VARIATION FROM SPECIFIED PLAN END SQUARENESS OR SKEW	± 1/2"
E	VARIATION FROM SPECIFIED ELEVATION END SQUARENESS OR SKEW	± 1/2"
F	SWEEP OVER MEMBER LENGTH:	± 3/8"
G	LOCATION OF GROUTED SPLICE COUPLER MEASURED FROM A COMMON REFERENCE POINT	± 1/4"
H	LOCAL SMOOTHNESS OF ANY SURFACE	± 1/4" IN 10 FEET
K	LOCATION OF BLOCKOUT FOR PILES	± 1"

PENNDOT DRAWING 12-603-BDTD 3/18/2013

MARK	DESCRIPTION	BY	CHK'D	RECM'D	DATE

REVISIONS

CENTRAL ATLANTIC BRIDGE ASSOCIATES (CABA)

BORTON-LAWSON
(570) 821-1999
WILKES-BARRE, PA

COMMONWEALTH OF PENNSYLVANIA
DEPARTMENT OF TRANSPORTATION

DATE:
SCALE: N/A

PRECAST CONCRETE
SUBSTRUCTURE STANDARDS

DWN: CK'D:
JOB NO:

TOLERANCES FOR PRECAST ELEMENTS
ABUTMENT AND WALL ELEMENTS

SHEET NO:
T-2

P:\1000-0301-00\DWGS\T2_ABUT AND WALL TOLERANCES.dgn
2/15/2013 AT 9:21:24 AM

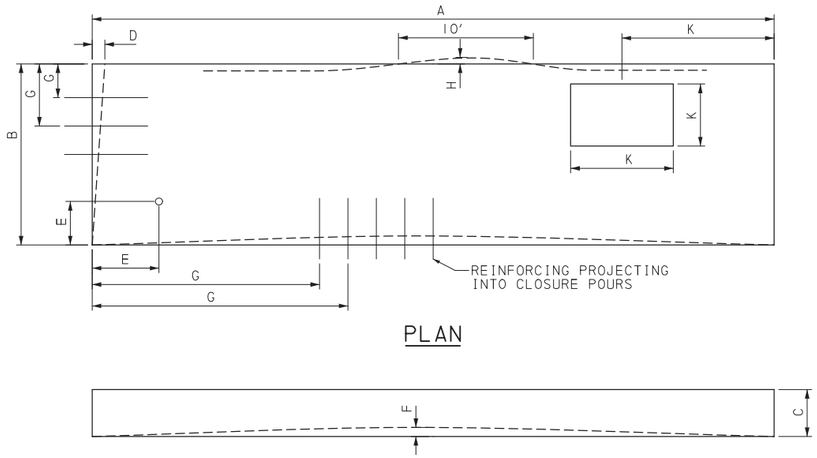

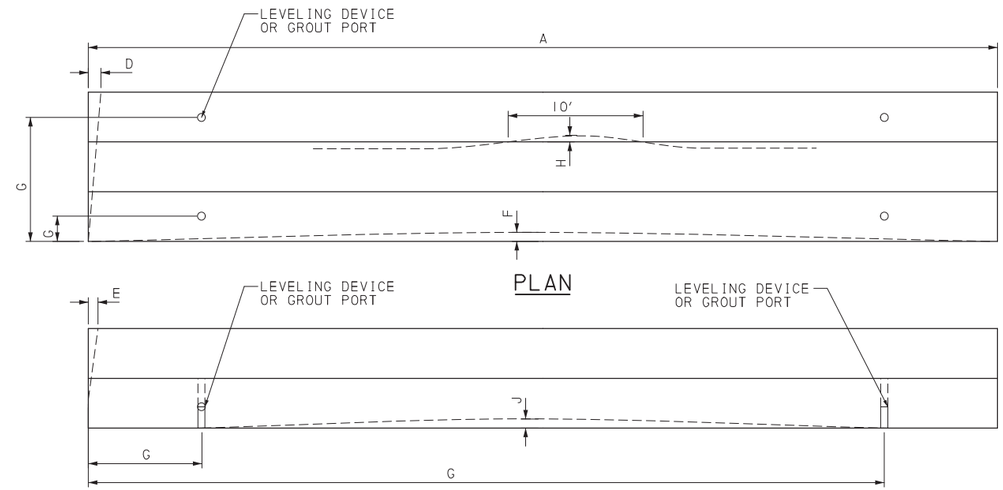

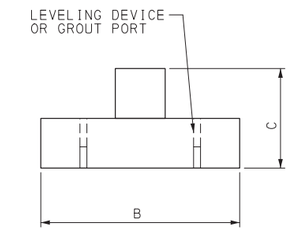

APPROACH SLAB TOLERANCES

A	LENGTH	± 1/4 "
B	WIDTH (OVERALL)	± 1/4 "
C	DEPTH (OVERALL)	± 1/4 "
D	VARIATION FROM SPECIFIED PLAN END SQUARENESS OR SKEW	± 1/2 "
E	LOCATION OF LEVELING BOLTS	± 1 "
F	SWEEP OVER MEMBER LENGTH:	± 3/8 "
G	LOCATION OF PROJECTING REINFORCING MEASURED FROM A COMMON REFERENCE POINT	± 1/2 "
H	LOCAL SMOOTHNESS OF ANY SURFACE	± 1/4 " IN 10 FEET
K	LOCATION AND SIZE OF BLOCKOUT FOR BASINS	± 1/2 "

SLEEPER SLAB FABRICATION TOLERANCES

A	LENGTH	± 1/2 "
B	WIDTH (OVERALL)	± 1/4 "
C	DEPTH (OVERALL)	± 1/4 "
D	VARIATION FROM SPECIFIED PLAN END SQUARENESS OR SKEW	± 1/8 " PER 12 INCH WIDTH ± 1/2 " MAXIMUM
E	VARIATION FROM SPECIFIED ELEVATION END SQUARENESS OR SKEW	± 1/8 " PER 12 INCH WIDTH ± 1/2 " MAXIMUM
F	SWEEP OVER MEMBER LENGTH:	± 1/2 "
G	LOCATION OF LEVELING DEVICE OR GROUT PORT MEASURED FROM A COMMON REFERENCE POINT	± 2"
H	LOCAL SMOOTHNESS OF ANY SURFACE	± 1/4 " IN 10 FEET
J	VARIATION FROM SPECIFIED CAMBER	± 1/8 " PER 10 FEET ± 1/2 " MAXIMUM

PENNDOT DRAWING 12-603-BDTD 3 / 18 / 2013

MARK	DESCRIPTION	BY	CHK'D	RECM'D	DATE

REVISIONS

CENTRAL ATLANTIC BRIDGE ASSOCIATES (CABA)

BORTON-LAWSON
(570) 821-1999
WILKES-BARRE, PA

COMMONWEALTH OF PENNSYLVANIA
DEPARTMENT OF TRANSPORTATION

DATE:
SCALE: N/A

PRECAST CONCRETE
SUBSTRUCTURE STANDARDS

DWN: CK'D:
JOB NO:

TOLERANCES FOR PRECAST ELEMENTS
APPROACH SLAB ELEMENTS

SHEET NO: T-3

P:\1000-0301-00\DWGS\T3_APPROACH SLAB TOLERANCES.dgn
2/15/2013 AT 9:27:24 AM

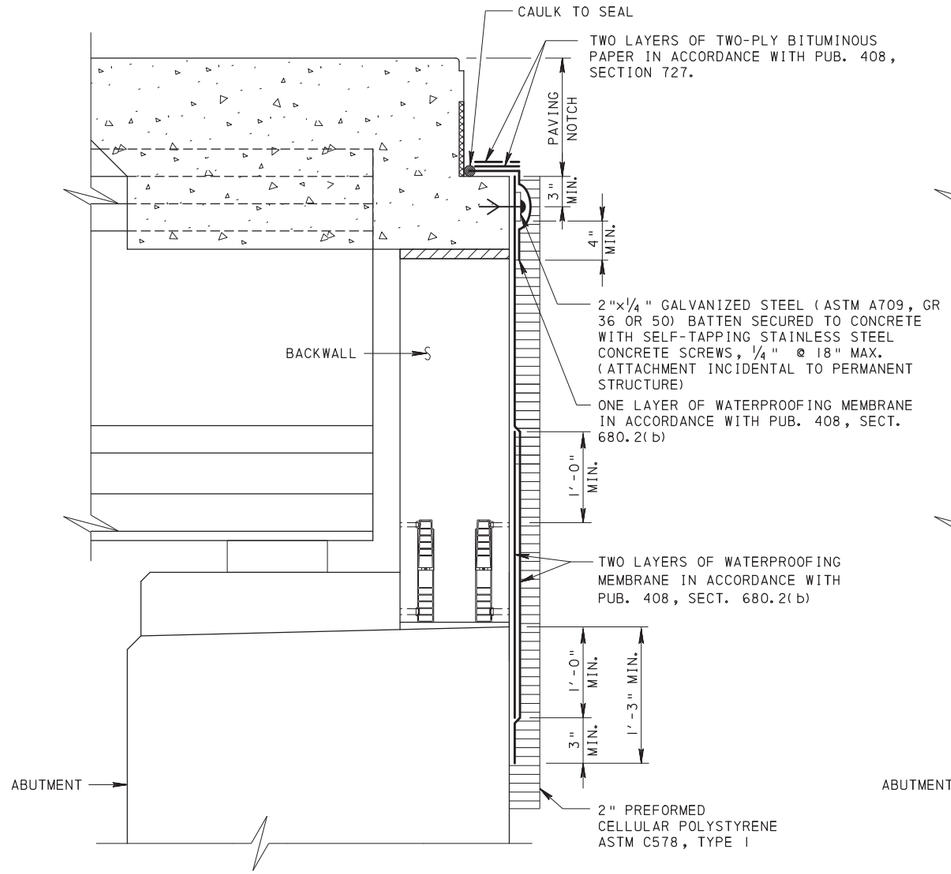

WATERPROOFING DETAIL AT BACKWALL WITH PAVING NOTCH

CANTILEVER ABUTMENT SHOWN, INTEGRAL ABUTMENT SIMILAR

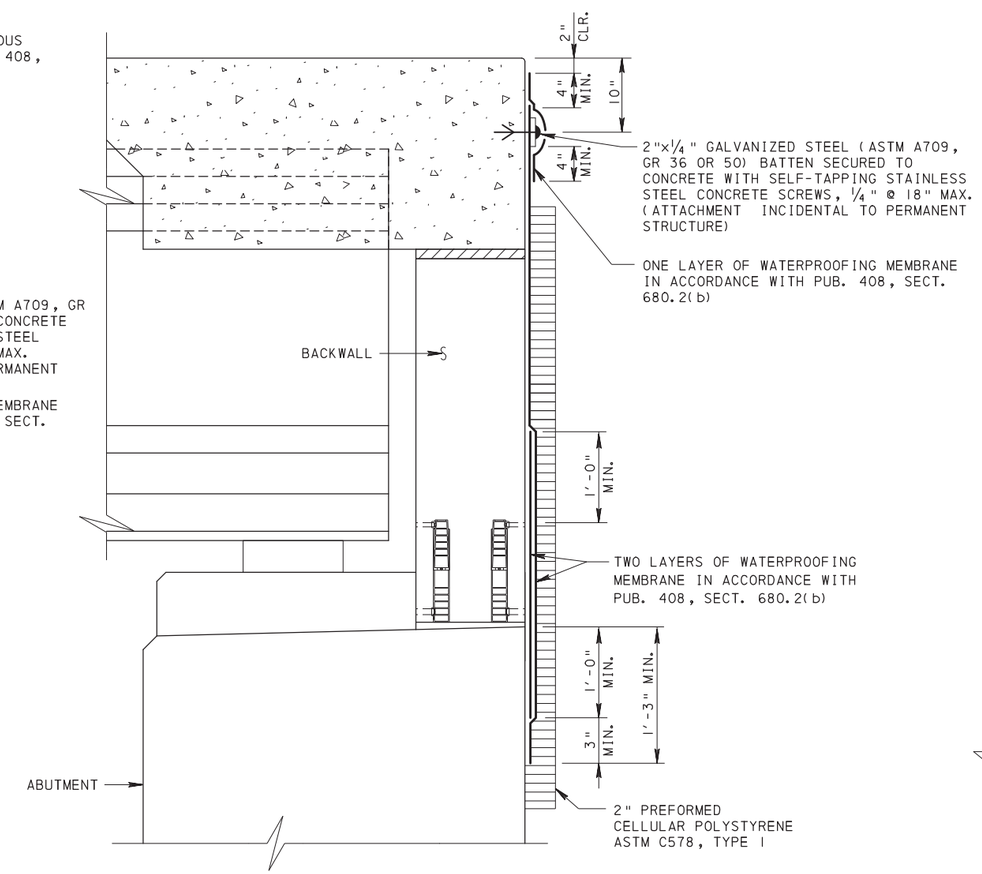

WATERPROOFING DETAIL AT BACKWALL WITHOUT PAVING NOTCH

CANTILEVER ABUTMENT SHOWN

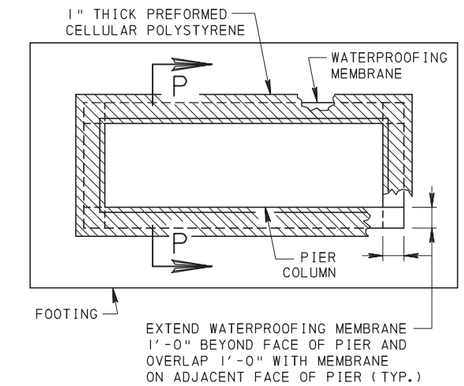

PLAN - RECTANGULAR COLUMN

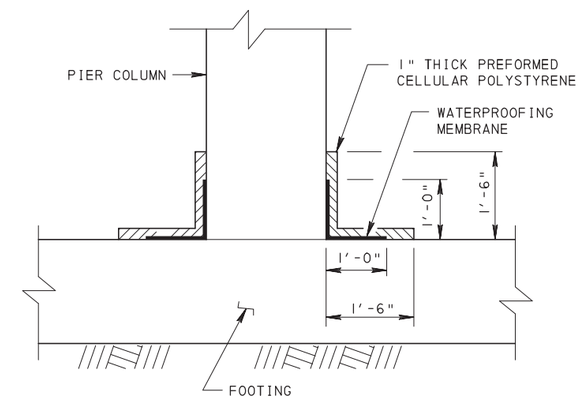

SECTION P-P

PIER WATERPROOFING DETAILS

PIER WATERPROOFING INSTALLATION NOTE:
INSTALL 2'-0" WIDE WATERPROOFING MEMBRANE TO FIT PIER COLUMN AND TOP OF FOOTING AS SHOWN, RUN MEMBRANE CONTINUOUS ALONG APPLICABLE FACE OF PIER COLUMN. USE AN ADHESIVE BACKED, PREFORMED WATERPROOFING MEMBRANE PER PUB. 408, SECTION 680.2 (b). PROVIDE 1'-6" MINIMUM PREFORMED CELLULAR POLYSTYRENE IN EACH DIRECTION OVER WATERPROOFING MEMBRANE AS PROTECTION.

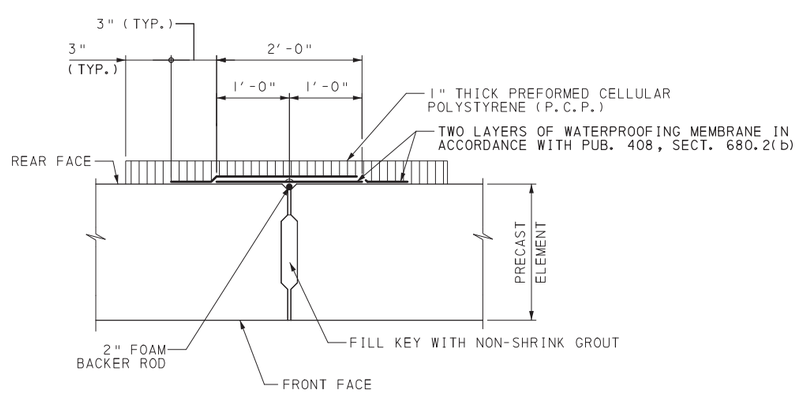

GROUT KEY WATERPROOFING

GROUT KEY WATERPROOFING SHOWN, EXPANSION JOINT WATERPROOFING SIMILAR

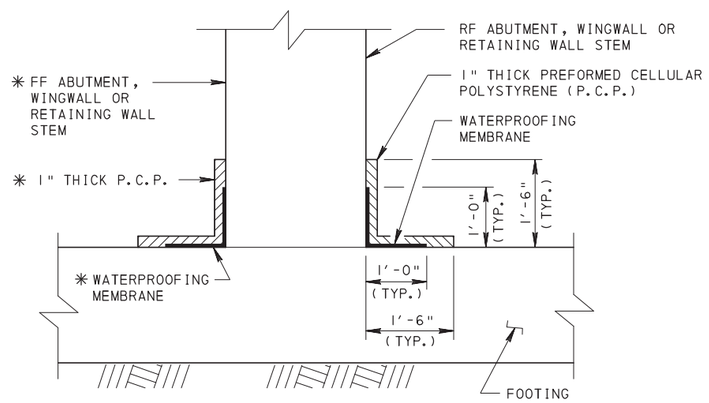

SECTION

ABUTMENT, WINGWALL OR RETAINING WALL WATERPROOFING DETAIL

✱ WATERPROOFING MEMBRANE AND 1" THICK PREFORMED CELLULAR POLYSTYRENE TO BE USED ON FRONT FACE OF ABUTMENT, WINGWALL OR RETAINING WALL STEM ONLY WHERE THE DISTANCE FROM EDGE OF PAVING TO THE FRONT FACE OF THE RESPECTIVE STEM IS ≤ 5 FEET.

NOTES

1. FOR ADDITIONAL WATERPROOFING DETAILS, SEE BD-656M AND BC-788M

PENNDOT DRAWING 12-603-BDTD 3/18/2013

MARK	DESCRIPTION	BY	CHK'D	RECM'D	DATE

REVISIONS

CENTRAL ATLANTIC BRIDGE ASSOCIATES (CABA)

BORTON-LAWSON (570) 821-1999 WILKES-BARRE, PA

COMMONWEALTH OF PENNSYLVANIA
DEPARTMENT OF TRANSPORTATION

DATE:
SCALE: N/A

PRECAST CONCRETE SUBSTRUCTURE STANDARDS

DWN: CK'D:
JOB NO:

TYPICAL WATERPROOFING DETAILS

SHEET NO: W-1

P:\1000-0301-00\DWGS\Waterproofing Details.dgn
2/15/2013 AT 9:27:25 AM

Product:

Item 8622-7005 - Stone Strong Retaining Wall System
Garden State Precast Inc.
PennDOT Drawing # 2009-187 PE

Approval Date:	**Initiated By SOL:**
April 11, 2013	483-13-04

Application/Use:

Prefabricated Stone Strong Retaining Wall System manufactured by Garden State Precast Inc. Wall Township, NJ has been approved for use as an "As-designed" or "Alternate" retaining wall. The use as an "As-designed" or "Alternate" or retaining wall is at the discretion of the District Executive.

Stone Strong Retaining Wall System's usage has the following restrictions:

- Not permitted on highway surcharged installations
- Maximum installed height is 16.5 feet.

This wall system meets both AASHTO and Design Manual, Part 4 design criteria.

Specifications:

Design/Material/Construction Specifications for this product are specified on PennDOT Drawing #2009-187 PE dated on April 11, 2013 of Stone Strong Retaining Wall System for your use.

Comments:

On those projects permitting the use of this system as an alternate, a special provision should be included in the proposal to indicate that the "Stone Strong Retaining Wall System" as an alternate is allowed.

The contractor will be required to revise the pertinent contract drawings as per DM-4, PP 1.10 to show the usage of "Stone Strong Retaining Wall System" and will also be required to reimburse the Department a fee of $1000 per design for the review and approval of the revision. This should be specified in the contract special provisions.

STONE STRONG SYSTEMS
SPECIFICATIONS FOR PRECAST MODULAR BLOCK RETAINING WALL SYSTEM

PART 1: GENERAL

1.01 DESCRIPTION

A. THE STONE STRONG RETAINING WALL SYSTEM DESIGNER TAKES FULL RESPONSIBILITY FOR THE ENGINEERING THEORY, CALCULATIONS, AND ENSURING ALL DESIGN ASSUMPTIONS ARE VALIDATED IN THE CONTRACT DOCUMENTS: EITHER BY NEEDED DETAILS OR CONSTRUCTION SPECIFICATIONS.

B. THE STONE STRONG RETAINING WALL SYSTEMS ARE NOT PERMITTED ON HIGHWAY SURCHARGED INSTALLATIONS. THE MAXIMUM INSTALLED HEIGHT IS 16.5 FEET.

C. WORK INCLUDES FURNISHING AND INSTALLING PRECAST MODULAR BLOCKS (PMB) TO THE LINES AND GRADES SHOWN ON THE PLANS AND AS SPECIFIED HEREIN. ALSO INCLUDED IS FURNISHING AND INSTALLING APPURTENANT MATERIALS REQUIRED FOR CONSTRUCTION OF THE COMPLETE SYSTEM.

D. THE CONTRACTOR IS SOLELY RESPONSIBLE FOR SAFETY. THE ARCHITECT/ENGINEER AND OWNER SHALL NOT BE RESPONSIBLE FOR MEANS OR METHODS OF CONSTRUCTION OR FOR SAFETY OF WORKERS OR OF THE PUBLIC.

E. ALLOWABLE DIFFERENTIAL SETTLEMENT

LONGITUDINAL DIFFERENTIAL SETTLEMENT	=	1/4"
TRANSVERSE DIFFERENTIAL SETTLEMENT	=	1/4"

F. SEE SHEET 6 OF 9 FOR STONE STRONG RETAINING WALL SYSTEM MINIMUM RADIUS AND SPECIAL TURNING BLOCKS:

1.02 SUBMITTALS AND DESIGN

A. PROVIDE, AT NO EXPENSE TO THE DEPARTMENT, FOUR(4) SETS(THREE (3) SETS TO THE DISTRICT, AND ONE (1) SET TO THE CENTRAL OFFICE, BRIDGE DIVISION) OF DESIGN DRAWINGS, CALCULATIONS, ERECTIONS METHODS AND DETAILED ERECTIONS PLANS FOR APPROVAL. PROVIDE SUFFICIENT DETAILS IN THE DESIGN DRAWINGS TO ELIMINATE THE NEED FOR SHOP DRAWINGS, USING DEPARTMENT DRAFTING STANDARD. SHOW A PROFESSIONAL ENGINEERS SEAL, LICENSED IN PENNSYLVANIA, WITH A VALID SIGNATURE IN INK, THE DATE SIGNED, A BUSINESS NAME AND ADDRESS, ON THE SHEET OF THE DESIGN DRAWINGS AND ALSO INDICATE "I CERTIFY THAT ALL ASSUMPTIONS MADE IN DESIGNING THIS WALL HAVE BEEN VALIDATED EITHER THROUGH CONSTRUCTION DETAILS OR SPECIAL NOTES AND INSTRUCTIONS TO THE FABRICATOR, ERECTOR AND CONTRACTOR". PLACE THE STATEMENT BELOW THE PE SEAL. THE DISTRICT BRIDGE ENGINEER WILL SIGN THE FINAL PLANS.

B. ON THE FIRST SHEET OF THE COMPUTATIONS, SHOW A PROFESSIONAL ENGINEERS SEAL, LICENSED IN PENNSYLVANIA, SIGNATURE AND THE DATE SIGNED. SHOW STONE STRONG RETAINING WALL PARAMETERS AND OTHER LIMITATIONS ARE AS PER STONE STRONG RETAINING WALL SYSTEM ENGINEERING MANUAL,. 5–12–2009 UPDATE. IN THE EVENT THAT CERTAIN DESIGN PARAMETERS, STRESSES OR SPECIFICATIONS ARE IN CONFLICT, THE FOLLOWING ORDER OF PREDOMINANCE GOVERNS:

a. DESIGN REQUIREMENTS LISTED IN "SPECIAL DRAWINGS AND SPECIAL REQUIREMENTS"
b. PDT – DESIGN STANDARDS
c. PDT – DESIGN MANUAL PART 4 (STRUCTURES)
d. AASHTO CURRENT LRFD BRIDGE DESIGN SPECIFICATIONS

C. IN THE EVENT THAT CLEAR ORDER OF PREDOMINANCE CANNOT BE ESTABLISHED OR A DIFFERENCE IN THE INTERPRETATION OF THE DESIGN CANNOT BE RESOLVED, THE CHIEF BRIDGE ENGINEER IS TO BE THE ARBITER AND HIS DECISION IS TO BE FINAL.

A. IF COLORED UNITS ARE TO BE USED IN THE WALL SYSTEM, A COLOR SAMPLE SHALL BE PREPARED ON SITE FOR REVIEW AND APPROVAL BY THE ARCHITECT/ENGINEER OR OWNER. THE COLOR SAMPLE MAY BE PART OF THE COMPLETED WALL, BUT SHALL BE LOCATED IN AN INCONSPICUOUS AREA.

B. IF GEOGRID REINFORCEMENT IS REQUIRED BY THE SHOP DRAWINGS, SUBMIT MANUFACTURERS LITERATURE AND TEST DATA FOR GEOGRIDS TO BE USED IN THE SEGMENTAL WALL SYSTEM. TEST DATA SHALL INCLUDE CONNECTION STRENGTH DATA FOR SEGMENTAL UNITS AND GEOGRIDS TO BE USED DETERMINED IN ACCORDANCE WITH ASTM D6638 AS WELL AS GEOGRID TENSILE STRENGTH AND CREEP DATA IN ACCORDANCE WITH ASTM D4595 AND ASTM D5262.

C. SUBMIT GRAIN SIZE TEST RESULTS IN ACCORDANCE WITH ASTM C136 FOR AGGREGATES TO BE USED FOR THE WALL BASE, FOR UNIT FILL, AND FOR SELECT REINFORCED FILL (IF ANY).

D. SUBMIT TEST RESULTS ON BORROW SOIL TO BE USED FOR BACKFILL AND FOR THE REINFORCED FILL (IF REQUIRED) INCLUDING ATTERBERG LIMITS AND PROCTOR BY ASTM D4318 AND ASTM D698.

1.03 REFERENCES

A. ASTM C39 – STANDARD TEST METHOD FOR COMPRESSIVE STRENGTH OF CYLINDRICAL CONCRETE SPECIMENS.
B. ASTM C136 – STANDARD TEST METHOD FOR SIEVE ANALYSIS OF FINE AND COARSE AGGREGATE.
C. ASTM D4318 – STANDARD TEST METHOD FOR LIQUID LIMIT, PLASTIC LIMIT, AND PLASTICITY INDEX OF SOILS.
D. ASTM D698 – STANDARD TEST METHOD FOR LABORATORY COMPACTION CHARACTERISTICS OF SOIL USING STANDARD EFFORT.
E. ASTM D4595 – STANDARD TEST METHOD FOR TENSILE PROPERTIES OF GEOTEXTILES BY THE WIDE–WIDTH STRIP METHOD.
F. ASTM D5262 – STANDARD TEST METHOD FOR EVALUATING THE UNCONFINED CREEP BEHAVIOR OF GEOSYNTHETICS.
G. ASTM D4632 – STANDARD TEST METHOD FOR GRAB BREAKING LOAD AND ELONGATION OF GEOTEXTILES.
H. ASTM D6638 – STANDARD TEST METHOD FOR DETERMINING CONNECTION STRENGTH BETWEEN GEOSYNTHETIC REINFORCEMENT AND SEGMENTAL CONCRETE UNITS (MODULAR CONCRETE BLOCKS).
I. ASTM D6916 – STANDARD TEST METHOD FOR DETERMINING THE SHEAR STRENGTH BETWEEN SEGMENTAL CONCRETE UNITS.
J. AASHTO – STANDARD SPECIFICATIONS FOR HIGHWAY BRIDGES.
K. NCMA – "DESIGN MANUAL FOR SEGMENTAL RETAINING WALLS".

PART 2: MATERIALS

2.01 WALL UNITS

A. PRECAST MODULAR BLOCKS SHALL BE STONE STRONG UNITS MANUFACTURED UNDER LICENSE FROM STONE STRONG, LLC.
B. DIMENSION TOLERANCES FOR PRECAST MODULAR BLOCKS SHALL BE +/– ¼ INCH FOR HORIZONTAL DIMENSIONS AND +/– 1/8 INCH FOR VERTICAL DIMENSIONS.
C. CONCRETE FOR PRECAST MODULAR BLOCKS SHALL HAVE A MINIMUM 28–DAY COMPRESSIVE STRENGTH OF 4,000 PSI. ENTRAINED AIR CONTENT SHALL BE BETWEEN 5 AND 7%.
D. REINFORCING STEEL (IF USED) SHALL BE GRADE 60. MINIMUM CLEAR COVER TO REINFORCEMENT SHALL BE 1½ INCHES.
E. THE FACE PATTERN SHALL BE SELECTED FROM THE MANUFACTURER'S STANDARD MOLDS. THE COLOR OF THE UNITS SHALL BE NATURAL GRAY. A CONCRETE STAIN MAY BE FIELD APPLIED TO COLOR THE UNITS IF SPECIFIED BY THE ARCHITECT/ENGINEER OR OWNER.
F. WELDED WIRE REINFORCING SHALL CONFORM TO ASTM A185
G. EPOXY COAT REINFORCING BARS OR WELDED WIRE FABRIC AS REQUIRED BY SITE CONDITIONS. SEE DESIGN MANUAL PART 4, P.P. 3.6.4.1.q.

2.02 GEOGRID

A. IF GEOGRID REINFORCEMENT IS REQUIRED, IT SHALL BE AS SHOWN IN THE PLANS OR AS DETAILED IN THE SHOP DRAWINGS. SUBSTITUTION OF A DIFFERENT TYPE OF GEOGRID SHALL NOT BE ALLOWED UNLESS APPROVED OF THE ARCHITECT/ENGINEER OR OWNER AFTER SUBMITTAL OF SHOP DRAWINGS AND TEST DATA.

2.03 WALL BASE

A. THE WALL BASE SHALL BE A HIGH ANGULARITY COARSE MATERIAL. WALL BASE MATERIAL SHALL CONSIST OF 100 PERCENT CRUSHED AGGREGATE, WITH THE FOLLOWING GRADATION:

US STANDARD SIEVE SIZE	PERCENT PASSING
1–1/2"	80–100
3/4"	50–90
#4	0–40
#200	0–10

B. THE CONTRACTOR MAY SUBSTITUTE LEAN CONCRETE WITH A MINIMUM 28–DAY COMPRESSIVE STRENGTH OF 2,500 PSI FOR THE GRANULAR BASE MATERIAL.

2.04 UNIT FILL

UNIT FILL SHALL BE A CLEAN COARSE AGGREGATE WITH HIGH ANGULARITY. THE UNIT FILL SHALL BE SCREENED 100 PERCENT CRUSHED AGGREGATE MEETING THE FOLLOWING GRADATION:

US STANDARD SIEVE SIZE	PERCENT PASSING
1–1/2"	100
3/4"	60–100
#4	0–40
#200	0–5

2.05 BACKFILL

PROVIDE STRUCTURAL BACKFILL (#57 AGGREGATE) CONFORMING TO THE REQUIREMENTS OF SECTION 703 PUBLICATION 408. DO NOT USE METALLURGICAL SLAG OR CINDERS.

2.06 DRAIN TILE

DRAIN TILE SHALL BE USED IF SHOWN ON THE PLANS OR IF INDICATED BY LOCAL PRACTICES AND CONDITIONS. IF USED, THE DRAIN TILE SHOULD BE A PERFORATED OR SLOTTED PVC OR CORRUGATED HDPE PIPE. THE DRAIN TILE SHOULD BE CONNECTED TO STORM DRAINS OR DAYLIGHTED AT LOW POINTS AND/OR PERIODICALLY ALONG THE WALL ALIGNMENT.

2.07 GEOTEXTILE FABRIC

F SHOWN ON THE PLANS OR THE SHOP DRAWINGS, PROVIDE A GEOTEXTILE FILTER FOR SEPARATION FROM BACKFILL AT THE TAILS OF THE BLOCKS. THE GEOTEXTILE SHALL BE A NEEDLE PUNCHED NONWOVEN FABRIC WITH A MINIMUM GRAB TENSILE STRENGTH OF 120 POUNDS ACCORDING TO ASTM D4632. IF USED, THE GEOTEXTILE MAY COVER THE ENTIRE BACK FACE OF THE BLOCKS OR MAY BE CUT IN STRIPS TO COVER THE GAPS BETWEEN TAIL UNITS WITH A MINIMUM OF 6 INCHES OF OVERLAP OVER THE CONCRETE TAIL ON BOTH SIDES.

2.08 DELIVERY, STORAGE, AND HANDLING

A. CONTRACTOR SHALL CHECK THE MATERIALS UPON DELIVERY TO ASSURE THAT PROPER MATERIALS HAVE BEEN RECEIVED.
B. CONTRACTOR SHALL PROTECT THE MATERIALS FROM DAMAGE. DAMAGED MATERIAL SHALL NOT BE INCORPORATED INTO THE WALL OR THE REINFORCED SOIL EMBANKMENTS.
C. CONTRACTOR SHALL PREVENT EXCESSIVE MUD, CONCRETE, ADHESIVES AND OTHER SUBSTANCES THAT MAY ADHERE FROM COMING IN CONTACT WITH THE MATERIALS.
D. EXPOSED FACES OF SEGMENTAL UNITS SHALL BE REASONABLY FREE OF CHIPS, CRACKS, OR STAINS.

2.09 QUALITY ASSURANCE

A. THE CONTRACTOR SHALL BE RESPONSIBLE FOR QUALITY CONTROL DURING EXCAVATION, INSTALLATION, AND BACKFILL.

PART 3: EXECUTION

3.01 EXCAVATION

A. EXCAVATE AS REQUIRED FOR INSTALLATION OF THE RETAINING WALL SYSTEM AND IN ACCORDANCE WITH RC–11M. EXCAVATE TO THE BASE LEVEL FOR A SUFFICIENT DISTANCE BEHIND THE FACE TO PERMIT INSTALLATION OF THE BASE AND GEOGRID REINFORCEMENT (IF ANY).
B. SLOPE OR SHORE EXCAVATION AS NECESSARY FOR SAFETY AND FOR CONFORMANCE WITH APPLICABLE OSHA REQUIREMENTS.

3.02 WALL BASE

A. FOUNDATION SOILS SHALL BE EXCAVATED TO THE DIMENSIONS SHOWN ON THE PLANS. FOUNDATION SOIL SHALL BE OBSERVED BY THE GEOTECHNICAL ENGINEER TO CONFIRM THAT THE BEARING SOILS ARE SIMILAR TO THE DESIGN CONDITIONS OR ASSUMPTIONS.
B. CONSTRUCT THE WALL BASE TO THE LINES AND GRADES SHOWN ON THE PLANS. PLACE GRANULAR BASE MATERIAL TO THE MINIMUM DIMENSIONS SHOWN. OVEREXCAVATED AREAS SHALL BE FILLED WITH ADDITIONAL GRANULAR BASE MATERIAL. COMPACT THE BASE TO PROVIDE A HARD AND LEVEL SURFACE TO SUPPORT THE WALL UNITS. BASE MATERIAL SHALL BE COMPACTED TO A MINIMUM OF 95 PERCENT OF THE MAXIMUM DRY DENSITY (ASTM D698, STANDARD PROCTOR).
C. PREPARE AND SMOOTH THE GRANULAR MATERIAL TO ENSURE COMPLETE CONTACT OF THE FIRST COURSE WITH THE BASE. THE SURFACE OF GRANULAR BASE MAY BE DRESSED WITH FINER AGGREGATE TO AID LEVELING, PROVIDED THAT THE THICKNESS OF DRESSING LAYER SHOULD NOT EXCEED 3 TIMES THE MAXIMUM PARTICLE SIZE USED.
D. CONTRACTOR MAY SUBSTITUTE LEAN CONCRETE FOR SOME OR ALL OF THE BASE MATERIAL. CONCRETE MAY BE PLACED FULL THICKNESS OR AS A TOPPING TO LEVEL THE BASE. IF USED AS A TOPPING, THE CONCRETE SHALL HAVE A MINIMUM THICKNESS OF 3 INCHES.

3.03 UNIT INSTALLATION

A. PLACE THE FIRST COURSE OF UNITS DIRECTLY ON THE WALL BASE. CHECK UNITS FOR LEVEL AND ALIGNMENT. ADJACENT UNITS SHOULD BE IN CONTACT. IF POSSIBLE, BEGIN PLACING UNITS AT THE LOWEST SECTION OF THE WALL.
B. FILL ALL VOIDS BETWEEN AND WITHIN THE BLOCKS WITH GRANULAR UNIT FILL. ADDITIONAL UNIT FILL IS NOT REQUIRED BEHIND THE UNITS, BUT MAY BE PLACED FOR THE CONVENIENCE OF THE CONTRACTOR AT NO ADDITIONAL COST TO THE DEPARTMENT.
C. PLACE STRUCTURAL BACKFILL BEHIND THE UNITS IN ACCORDANCE WITH RC–12M AND IN MAXIMUM LOOSE LIFTS OF 8 INCHES AND COMPACT. IF SELECT GRANULAR FILL IS REQUIRED, IT SHOULD EXTEND THE FULL LENGTH OF THE GEOGRID REINFORCEMENT. COMPACT ALL BACKFILL TO A MINIMUM OF 95 PERCENT OF THE MAXIMUM DRY DENSITY (ASTM D698, STANDARD PROCTOR). FOR COHESIVE SOILS, THE MOISTURE CONTENT AT THE TIME OF COMPACTION SHOULD BE ADJUSTED TO WITHIN –3 AND +4 PERCENT OF OPTIMUM. PLACE BACKFILL IN SUCCESSIVE LIFTS UNTIL LEVEL WITH THE TOP OF THE FACING UNIT.
D. REMOVE ALL EXCESS AGGREGATE AND OTHER MATERIALS FROM THE TOP OF THE UNITS BEFORE LAYING UP THE NEXT COURSE.
E. FOR GEOGRID REINFORCED WALLS, PLACE THE CORRECT GEOGRID AT THE LOCATIONS AND ELEVATIONS SHOWN ON THE PLANS OR THE SHOP DRAWINGS. GEOGRID REINFORCEMENT SHALL BE PLACED HORIZONTALLY ON COMPACTED BACKFILL. THE LENGTH OF THE GEOGRID IS MEASURED FROM THE FRONT FACE OF THE WALL. EXTEND THE GRID ONTO THE FRONT FACE FLANGE OF THE FACING UNIT. ORIENT THE GEOGRID WITH THE STRONG AXIS (MACHINE DIRECTION) PLACED PERPENDICULAR TO THE WALL FACE. GEOGRID SHALL NOT BE SPLICED BY ANY MEANS IN THE ROLL DIRECTION.
F. GEOGRIDS SHALL BE PLACED SIDE BY SIDE TO PROVIDE COMPLETE COVERAGE ALONG THE WALL FACE. NO OVERLAP IS REQUIRED BETWEEN ADJACENT GRIDS ON STRAIGHT SECTIONS OF THE WALL. ON CONVEX CURVES, PLACE A MINIMUM OF 3 INCHES OF BACKFILL MATERIAL BETWEEN OVERLAPPING GEOGRID LAYERS.
G. PLACE THE NEXT COURSE OF SEGMENTAL UNITS IN RUNNING BOND WITH THE PREVIOUS COURSE. PLACE THE WEB NOTCH OVER THE ALIGNMENT HOOP PROTRUDING FROM THE UNIT BELOW, AND PULL THE UNIT FORWARD TO CONTACT THE HOOP.
H. FOR GEOGRID REINFORCED WALLS, PULL GEOGRIDS TAUGHT AND STAKE THE LOOSE END BEFORE PLACING THE NEXT COURSE OF BACKFILL. BACKFILL SHALL BE PLACED, SPREAD, AND COMPACTED IN SUCH A MANNER THAT MINIMIZES THE DEVELOPMENT OF WRINKLES IN THE GEOGRID AND/OR MOVEMENT OF THE GEOGRID. DO NOT OPERATE EQUIPMENT DIRECTLY ON THE GEOGRID. A MINIMUM BACKFILL DEPTH OF 6 INCHES SHOULD BE PLACED BEFORE OPERATING EQUIPMENT OVER THE GRIDS.
I. CONTINUE PLACING SUCCESSIVE COURSES TO THE ELEVATIONS SHOWN ON THE PLANS. CONSTRUCT WALL IN LEVEL STAGES, PLACING THE UNITS AT EACH COURSE FOR THE ENTIRE LENGTH OF THE WALL, IF POSSIBLE. UNIT FILL AND BACKFILL SHOULD BE PLACED TO THE LEVEL OF THE TOP OF THE FACING UNIT BEFORE PLACING THE NEXT COURSE.
J. PROVIDE TEMPORARY SWALES TO DIVERT RUNOFF AWAY FROM WALL EXCAVATION AND AWAY FROM FACE.
K. FINAL GRADE ABOVE AND BELOW THE RETAINING WALL SHALL PROVIDE FOR POSITIVE DRAINAGE AND PREVENT PONDING. PROTECT COMPLETED WALL FROM OTHER CONSTRUCTION. DO NOT OPERATE LARGE EQUIPMENT OR STORE MATERIALS ABOVE THE WALL THAT EXCEED THE DESIGN SURCHARGE LOADS.

4/11/2013

PENNSYLVANIA
DEPARTMENT OF TRANSPORTATION
RECOMMENDED
Thomas P Macioce
CHIEF BRIDGE ENGINEER

COMMONWEALTH OF PENNSYLVANIA
REGISTERED PROFESSIONAL ENGINEER
JOSEPH M. MECZKOWSKI
ENGINEER
PE-043189-E

Mark	Description	By	Chk'd	Recm'd	Date

PENNDOT DRAWING #2009-187 PE

STONE STRONG RETAINING WALL SYSTEM
GENERAL NOTES

DES: PEH

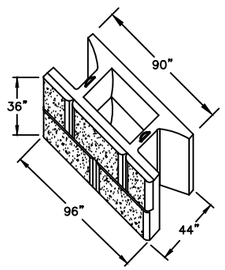

STONE STRONG
24 SF UNIT

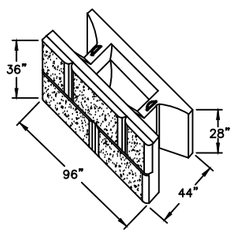

STONE STRONG
24 SF TOP UNIT

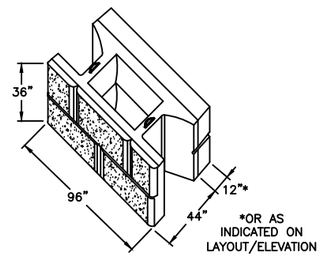

STONE STRONG
24 SF MASS
EXTENDER UNIT

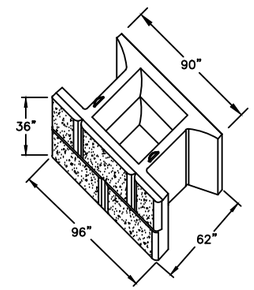

STONE STRONG
24 SF – 62 UNIT

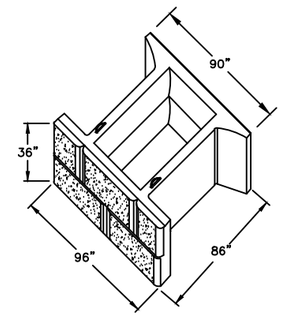

STONE STRONG
24 SF – 86 UNIT

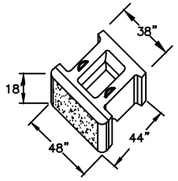

STONE STRONG
6 SF UNIT

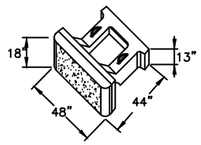

STONE STRONG
6 SF TOP UNIT

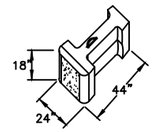

STONE STRONG
3 SF UNIT

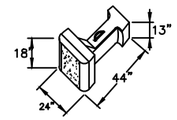

STONE STRONG
3 SF TOP UNIT

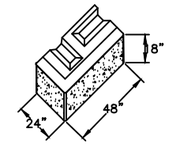

STONE STRONG
END UNIT

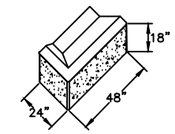

STONE STRONG
END UNIT

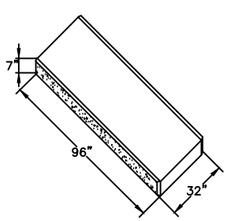

STONE STRONG
CAP STEP BLOCK

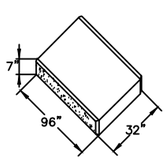

STONE STRONG
CAP STEP HALF BLOCK

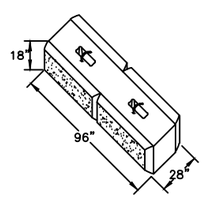

STONE STRONG
DUAL FACE UNIT

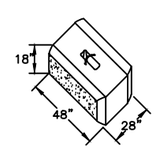

STONE STRONG
DUAL FACE HALF UNIT

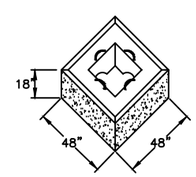

STONE STRONG
90° CORNER UNIT

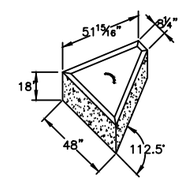

STONE STRONG
45° CORNER UNIT

NOTE: SEE SHEET 5 FOR REINFORCING

BLOCK LIBRARY

BLOC		CONC WT	OID OL
TYPE	DESCRIPTION	LBS	FT
6.0	6SF UNIT (6 SQUARE FEET)	1600	10.75
24.0	24SF UNIT (24 SQUARE FEET)	6000	43.32
24-ME	24SF MASS EXTENDER UNIT	10000	44.53
24-M6	24SF W/ 6" MASS EXTENDER	8000	43.93
24-M18	24SF W/ 18" MASS EXTENDER	12000	45.14
24-M24	24SF W/ 24" MASS EXTENDER	14000	45.74
24-62	24SF-62 UNIT	6750	74.07
24-86	24SF-86 UNIT	7750	115.07
24-30	24SF W/ 30" MASS EXTENDER	1838	43.32
45CU	45 DEGREE CORNER UNIT	2000	0.00
90CU	90 DEGREE CORNER UNIT	2600	2.70
Cap	CAP UNIT	1600	0.00
DF	DUAL FACE UNIT	3500	0.00
DFH	DUAL FACE HALF UNIT	1,760	0.00

Mark	Description	By	Chk'd	Recm'd	Date

PENNDOT DRAWING #2009-187 PE

STONE STRONG RETAINING WALL SYSTEM
BLOCK UNIT DETAILS

4/11/2013

SCALE: NTS

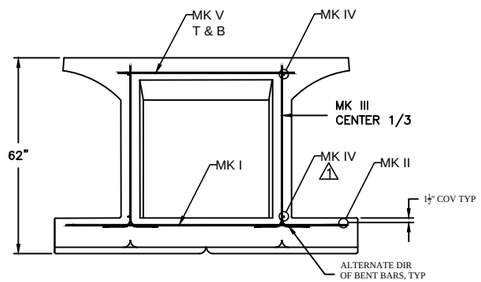

STONE STRONG 24–62 SF UNIT
(NTS)

BAR SCHEDULE				
MARK	SIZE	NUMBER	BEND	LENGTH
I	4	1 5	NA	89
II	4	4	NA	30
III	4	10	90	60
IV	4	4	NA	25
V	4	2	NA	56

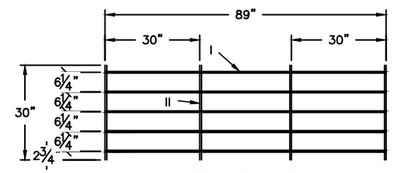

FRONT MAT 1

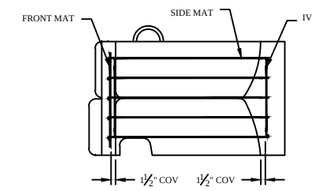

SIDE VIEW AT STEM 1

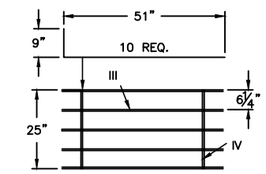

SIDE MAT (2) REQUIRED

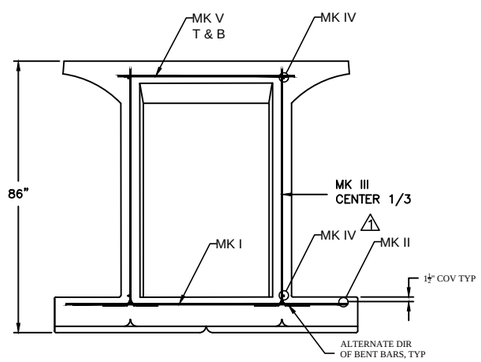

STONE STRONG 24–86 SF UNIT
(NTS)

BAR SCHEDULE				
MARK	SIZE	NUMBER	BEND	LENGTH
I	4	1 5	NA	89
II	4	4	NA	30
III	4	10	90	84
IV	4	4	NA	25
V	4	2	NA	56

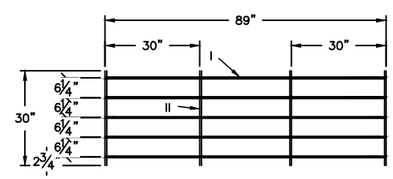

FRONT MAT 1

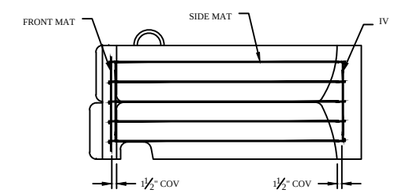

SIDE VIEW AT STEM 1

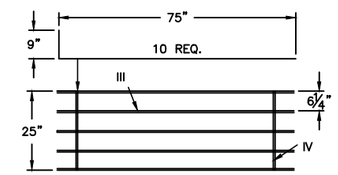

SIDE MAT (2) REQUIRED

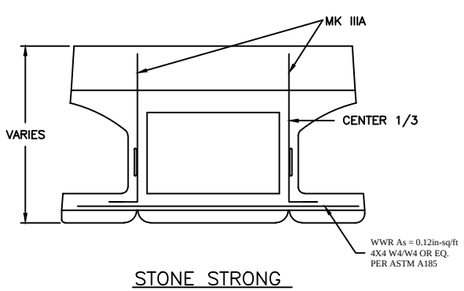

STONE STRONG
24 SF UNIT W/ MASS EXTENDER
(NTS)

BAR SCHEDULE				
MARK	SIZE	NUMBER	BEND	LENGTH
IIIA	4	4	90	VARIES
IIIB	4	4	90	42

2

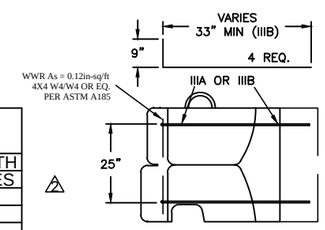

SIDE VIEW AT STEM

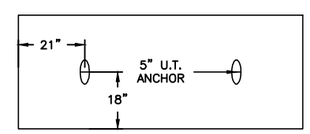

REAR VIEW (TYP.)

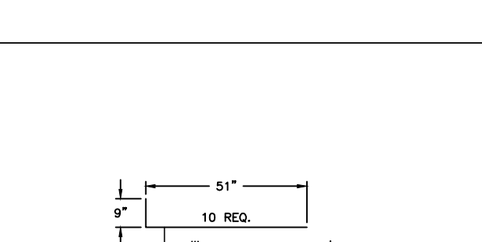

STONE STRONG
24 SF UNIT W/O MASS EXTENDER
(NTS)

Mark	Description	By	Chk'd	Recm'd	Date
1	PER REVIEW COMMENTS	RET			10/24/12
1	PER REVIEW COMMENTS	RET			10/24/12

4/11/2013

PENNDOT DRAWING #2009-187 PE

STONE STRONG RETAINING WALL SYSTEM
WALL UNIT DETAILS AND
REINFORCING

SCALE: NTS

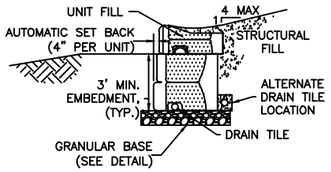

4.5' BF GRAVITY WALL
CROSS SECTION

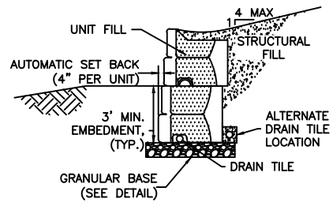

6' BF GRAVITY WALL
CROSS SECTION

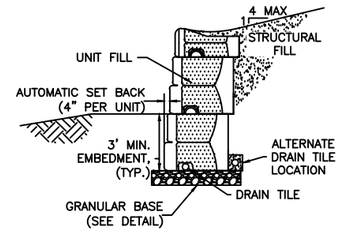

7.5' BF GRAVITY WALL
CROSS SECTION

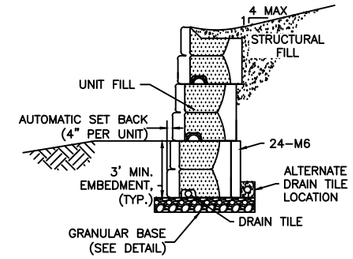

9' BF GRAVITY WALL
CROSS SECTION

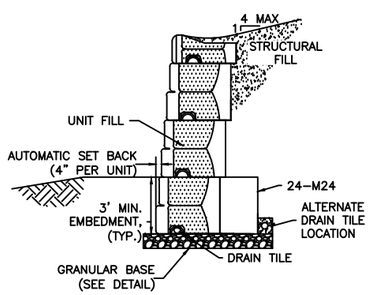

10.5' BF GRAVITY WALL
CROSS SECTION

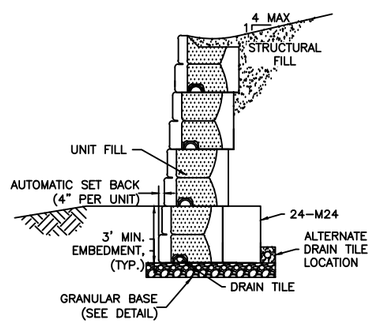

12' BF GRAVITY WALL
CROSS SECTION

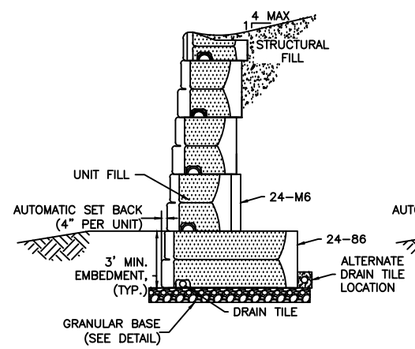

13.5' BF GRAVITY WALL
CROSS SECTION

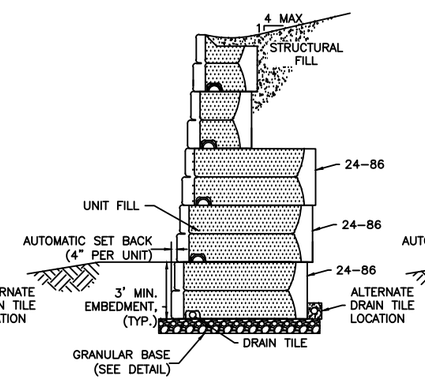

15' BF GRAVITY WALL
CROSS SECTION

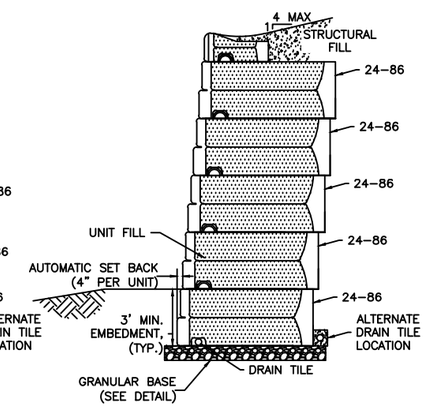

16.5' BF GRAVITY WALL
CROSS SECTION

HATCH LEGEND

- STRUCTURAL FILL
- UNIT FILL
- EARTH
- GRANULAR BASE

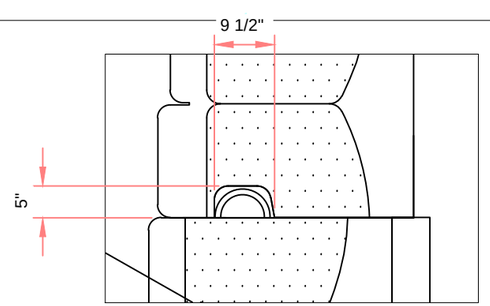

HANDLE RECESS
FOR BATERED STACK

Mark	Description	By	Chk'd	Recm'd	Date

4/11/2013

PENNDOT DRAWING #2009-187 PE

STONE STRONG RETAINING WALL SYSTEM
TYPICAL CROSS-SECTIONS
BATTERED FRONT FACE (BF)

SCALE: NTS

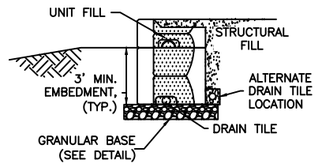

4.5' VF GRAVITY WALL
CROSS SECTION

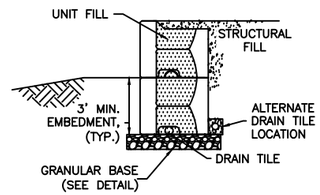

6' VF GRAVITY WALL
CROSS SECTION

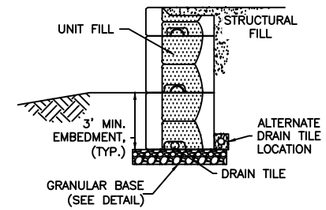

7.5' VF GRAVITY WALL
CROSS SECTION

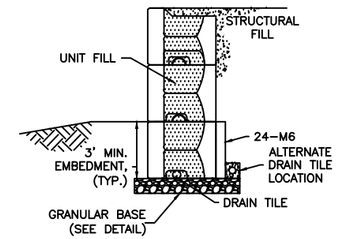

9 VF' GRAVITY WALL
CROSS SECTION

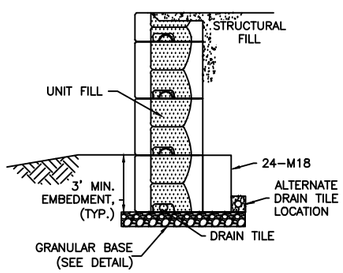

10.5' VF GRAVITY WALL
CROSS SECTION

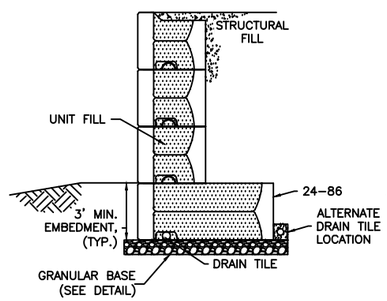

12' VF GRAVITY WALL
CROSS SECTION

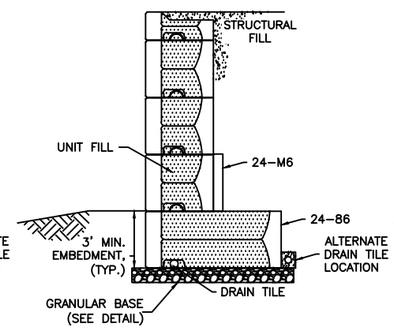

13.5' VF GRAVITY WALL
CROSS SECTION

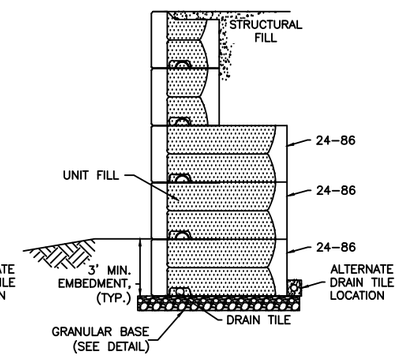

15 VF GRAVITY WALL
CROSS SECTION

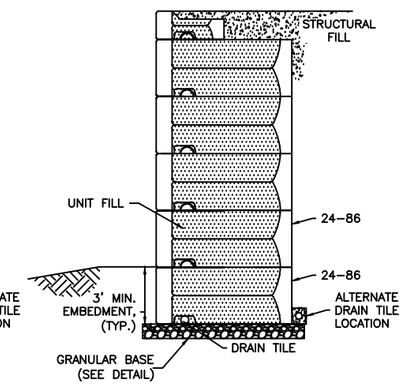

16.5 VF GRAVITY WALL
CROSS SECTION

HATCH LEGEND

- STRUCTURAL FILL
- UNIT FILL
- EARTH
- GRANULAR BASE

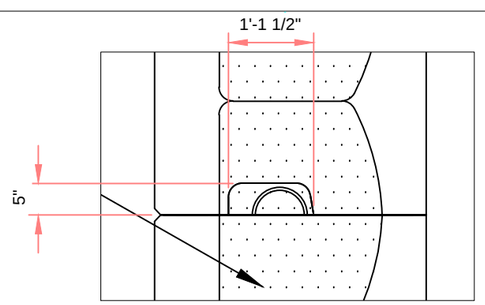

HANDLE RECESS
FOR VERTICAL STACK

Mark	Description	By	Chk'd	Recm'd	Date

PENNDOT DRAWING #2009-187 PE

STONE STRONG RETAINING WALL SYSTEM
TYPICAL CROSS-SECTIONS
VERTICAL FRONT FACE (VF)

4/11/2013

COMMONWEALTH OF PENNSYLVANIA
REGISTERED PROFESSIONAL
JOSEPH J. MECZKOWSKI
ENGINEER
PE-043884-E
A-17172

SCALE: NTS

SHEET 5 OF 9

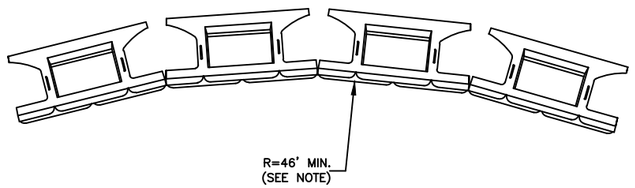

MINIMUM CONCAVE RADIUS		
WALL HEIGHT (ft)	TOTAL # OF COURSES	REQ'D. RADIUS AT TOP COURSE
6	2	46' 4"
9	3	46' 8"
12	4	47' 0"
15	5	47' 4"

NOTE:
MINIMUM RADIUS OCCURS AT LOWEST COURSE. RADIUS INCREASES 4" PER COURSE ABOVE, AS SHOWN ON TABLE.

MINIMUM CONCAVE RADIUS – 24 SF UNITS

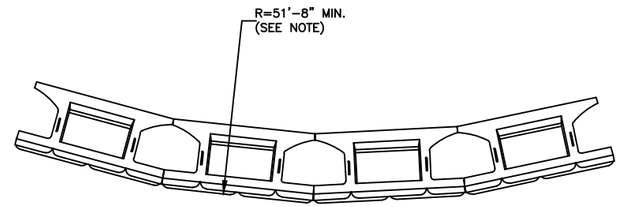

MINIMUM CONVEX RADIUS		
WALL HEIGHT (ft)	TOTAL # OF COURSES	REQD. RADIUS AT FIRST COURSE
6	2	52' 0"
9	3	52' 4"
12	4	52' 8"
15	5	53' 0"

NOTE:
MINIMUM RADIUS OCCURS AT LOWEST COURSE. RADIUS INCREASES 4" PER COURSE ABOVE, AS SHOWN ON TABLE.

MINIMUM CONVEX RADIUS – 24 SF UNITS

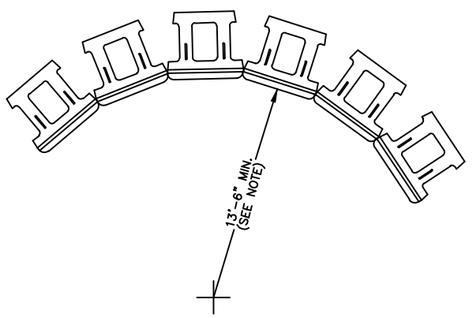

MINIMUM CONCAVE RADIUS		
WALL HEIGHT (ft)	TOTAL # OF COURSES	REQ'D. RADIUS AT TOP COURSE
3	2	13' 8"
4 1/2	3	13' 10"
6	4	14' 0"
7 1/2	5	14' 2"
9	6	14''4"
10 1/2	7	14' 6"
12	8	14' 8"

NOTE:
MINIMUM RADIUS OCCURS AT LOWEST COURSE. RADIUS INCREASES 2" PER COURSE ABOVE, AS SHOWN ON TABLE.

MINIMUM CONCAVE RADIUS – 6 SF UNITS

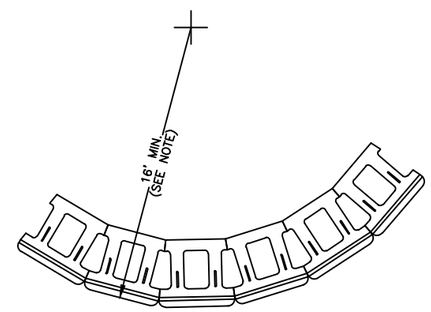

MINIMUM CONVEX RADIUS		
WALL HEIGHT (ft)	TOTAL # OF COURSES	REQD. RADIUS AT FIRST COURSE
3	2	16' 2"
4 1/2	3	16' 4"
6	4	16' 6"
7 1/2	5	16' 8"
9	6	16' 10"
10 1/2	7	17' 0"
12	8	17' 2"

NOTE:
MINIMUM RADIUS OCCURS AT LOWEST COURSE. RADIUS INCREASES 2" PER COURSE ABOVE, AS SHOWN ON TABLE.

MINIMUM CONVEX RADIUS – 6 SF UNITS

Mark	Description	By	Chk'd	Recm'd	Date

4/11/2013

PENNDOT DRAWING #2009-187 PE

STONE STRONG RETAINING WALL SYSTEM
WALL HORIZONTAL
ALIGNMENT

SCALE: NTS

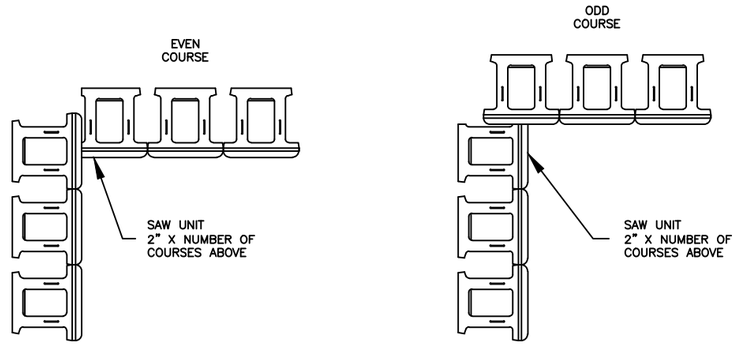

6 SF LACED INSIDE CORNER

NOTE:
TOP COURSE WILL USE FILL BLOCKS.
TRIM LOWER COURSES TO MAINTAIN
RUNNING BOND, EXCEPT AS NOTED
ON LAYOUT DRAWING.

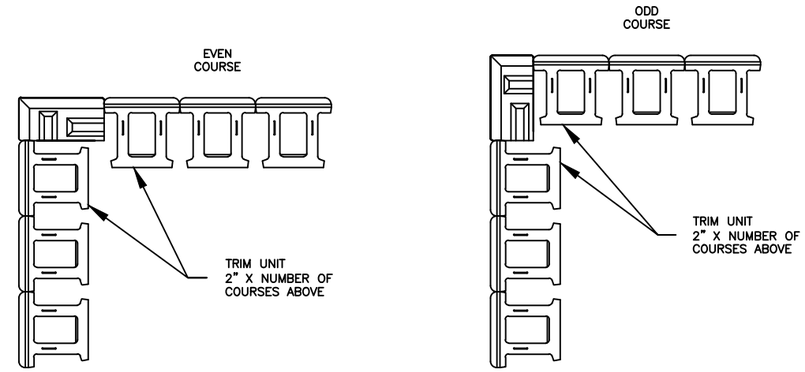

6 SF LACED OUTSIDE CORNER

NOTE:
USE FULL BLOCKS FIRST COURSE.
TRIM SUBSEQUENT COURSES TO
MAINTAIN RUNNING BOND, EXCEPT
AS NOTED ON LAYOUT DRAWING.

CAST SLEEVE FOR FENCE POST IN
TOP CORNER BLOCK.

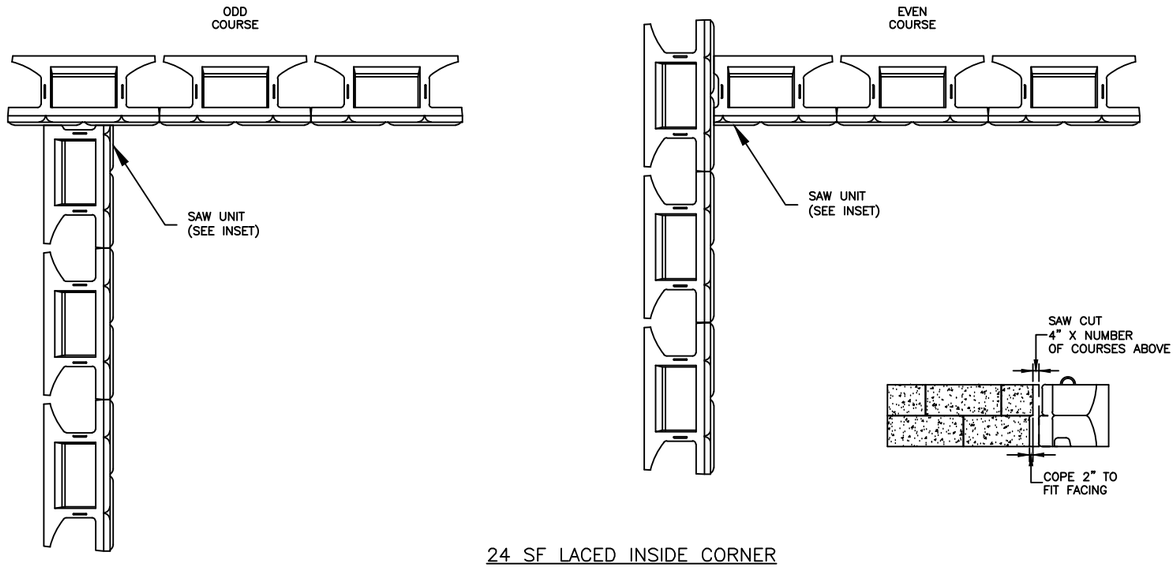

24 SF LACED INSIDE CORNER

NOTE:
TOP COURSE WILL USE FILL BLOCKS.
TRIM LOWER COURSES TO MAINTAIN
RUNNING BOND, EXCEPT AS NOTED
ON LAYOUT DRAWING.

4/11/2013

Mark	Description	By	Chk'd	Recm'd	Date

PENNDOT DRAWING #2009-187 PE

STONE STRONG RETAINING WALL SYSTEM
TYPICAL CORNER DETAILS - 1

SCALE: NTS

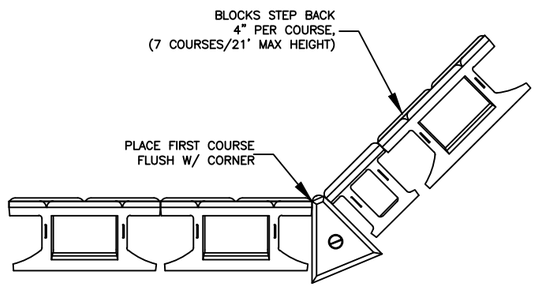

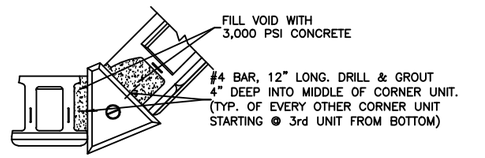

45° CORNER TIEBACK

NOTE:
RECOMMENDED FOR CORNERS 12' AND TALLER. INSTALL TIEBACK EVERY 3' VERTICALLY STARTING AT 3' ABOVE THE BASE.

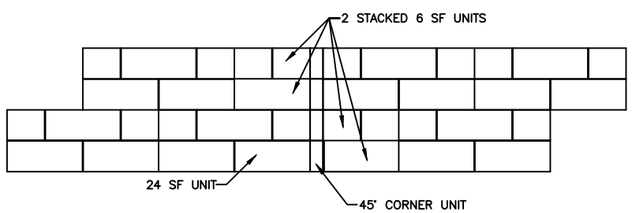

INSIDE 45° CORNER

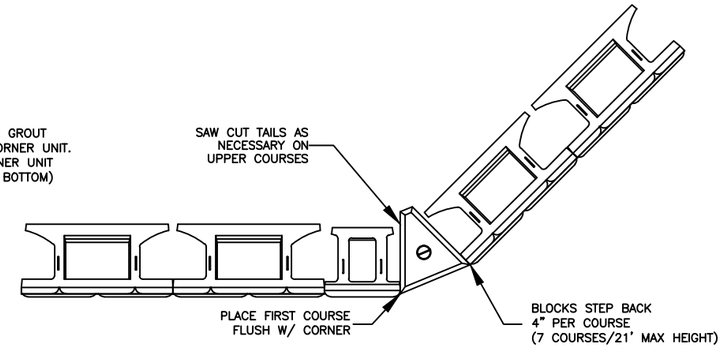

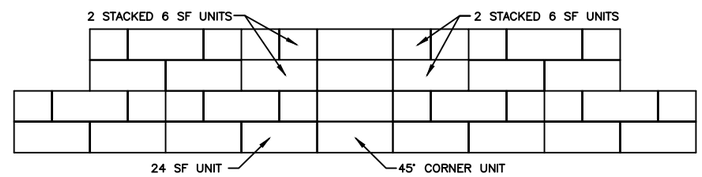

OUTSIDE 45° CORNER

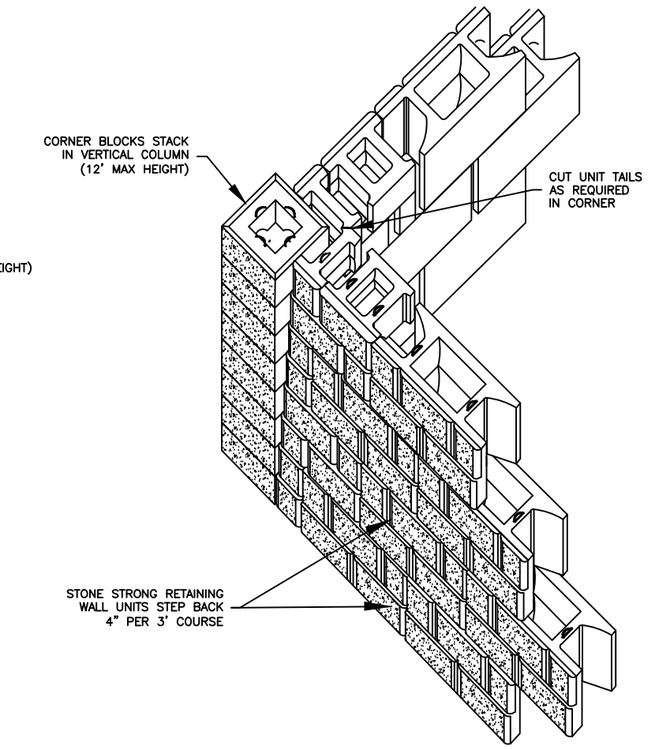

OUTSIDE 90° CORNER
PERSPECTIVE IVEW

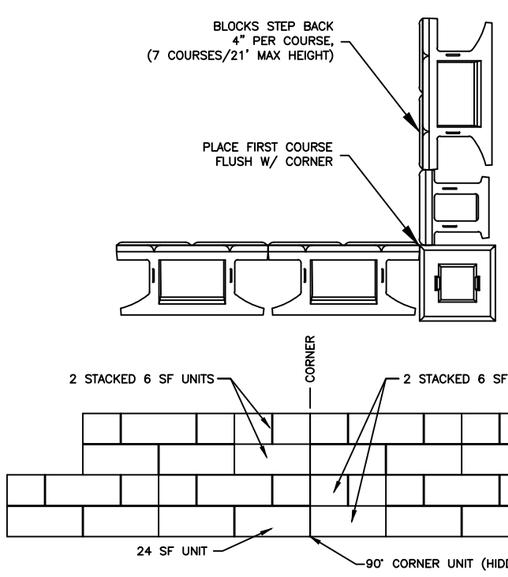

INSIDE 90° CORNER

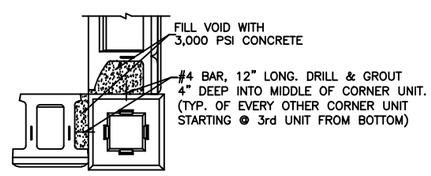

90° CORNER TIEBACK

NOTE:
RECOMMENDED FOR CORNERS 12' AND TALLER. INSTALL TIEBACK EVERY 3' VERTICALLY STARTING AT 3' ABOVE THE BASE.

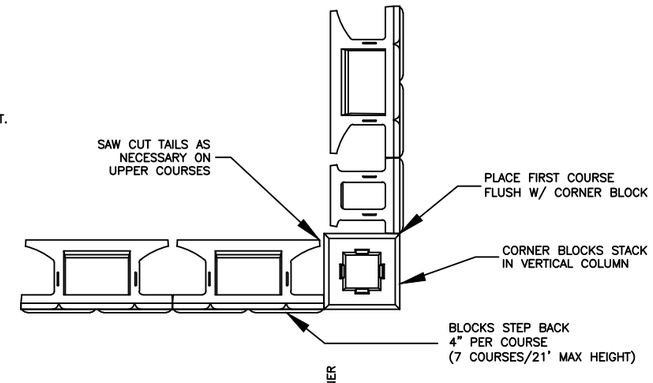

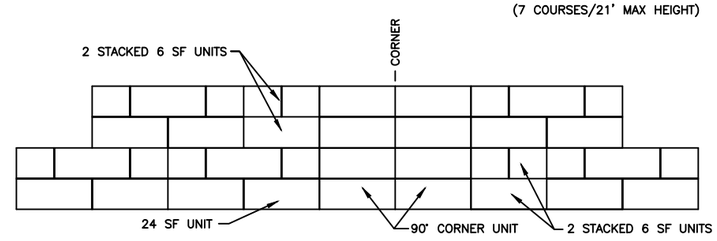

OUTSIDE 90° CORNER

Mark	Description	By	Chk'd	Recm'd	Date

PENNDOT DRAWING #2009-187 PE

STONE STRONG RETAINING WALL SYSTEM
WALL CORNER DETAILS - 2

4/11/2013

SCALE: NTS

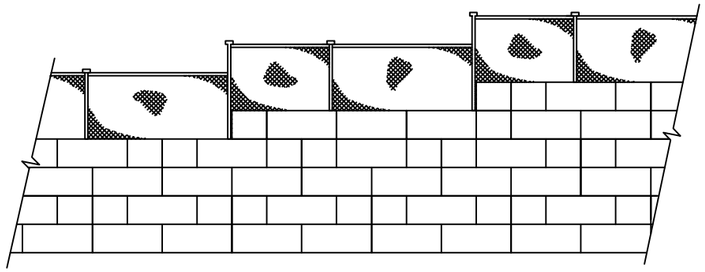

TYPICAL FENCE CONFIGURATION

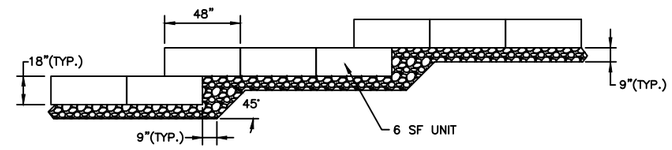

6 SF WALL BASE STEP

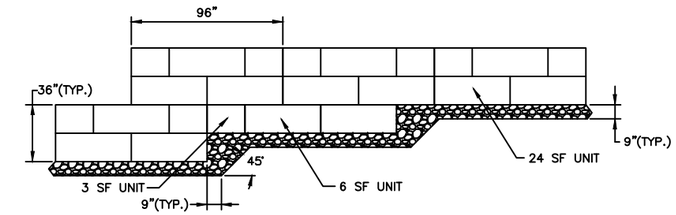

24 SF WALL BASE STEP

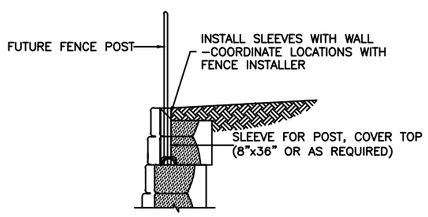

24 SF FENCE SLEEVE

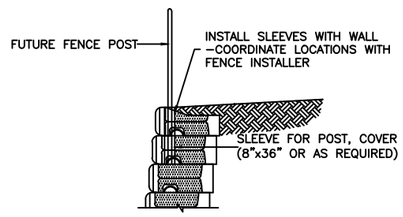

6 SF FENCE SLEEVE

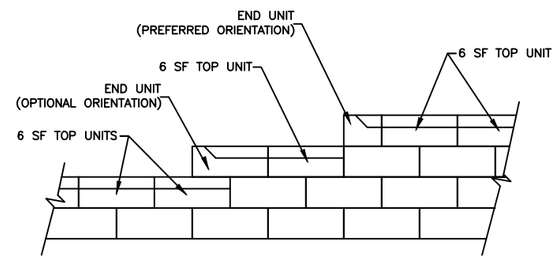

TOP OF WALL STEPS

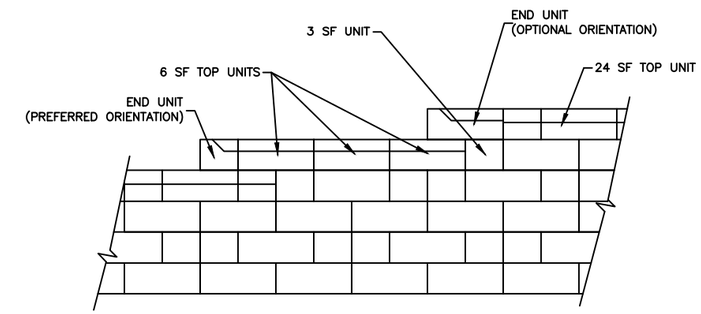

TOP OF WALL STEPS

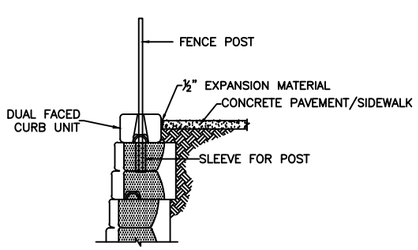

DUAL FACE CURB w/SIDEWALK

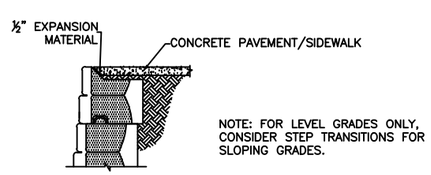

TOP OF WALL w/SIDEWALK

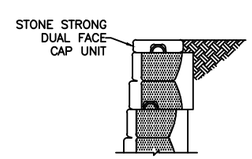

STONE STRONG CAP UNIT

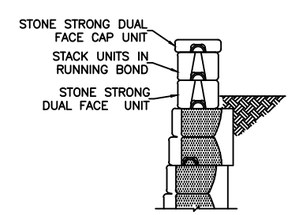

DUAL FACE PARAPET WALL w/ CAP

Mark	Description	By	Chk'd	Recm'd	Date

PENNDOT DRAWING #2009-187 PE

STONE STRONG RETAINING WALL SYSTEM
WALL BASE STEP, FACE PARAPET,
AND FENCE DETAILS

4/11/2013

SCALE: NTS

Product:

PA Bulb-Tee Beam WWR Details Standard
Central Atlantic Bridge Associates (CABA)
PennDOT Drawing # 13-601-BDTD, REV. 1

Approval Date:	**Initiated By SOL:**
January 17, 2014	483-14-01

Application/Use:

PA Bulb-Tee Beam Welded Wire Reinforcement (WWR) Details Standard, developed by CABA and previously approved on April 11, 2013 with a New Product Item No. 58, has been revised by CABA to include two (2) changes.

- Additional longitudinal steel that is not welded to the shear stirrups.
- A bent steel option for bottom confinement reinforcements.

This new product is permitted for use in prestressed bulb-tee beams. WWR is permitted to provide mild reinforcement in the fabrication of prestressed PA bulb-tee beam listed in BD-662M.

Specifications:

Material/Construction Specifications for this product are specified on PennDOT Drawing #13-601-BDTD, Rev. 1 dated on January 17, 2014 of PA Bulb-Tee Beam WWR Details Standard.

Comments:

None.

General Notes:

The purpose of this standard is to provide details of Welded Wire Reinforcement (WWR) for Prestressed Concrete Bridge Beams that meet the requirements of BD-662M for PA Bulb Tee Girders.

1.0 GENERAL

A. This standard is intended solely to convey additional material and detailing requirements for the use of welded wire reinforcement (WWR) for use in Prestressed bulb-tee beams. Refer to BD-662M for additional information and details not included in this standard.

B. All WWR Material shall be provided by an approved Bulletin 15 supplier listed in section 709.4.

C. All WWR Material shall conform to PennDOT 408/2011 - Section 709 - Reinforcement Steel.

D. All WWR Material shall be certified to conform to AASHTO M221 (ASTM A 497)

a. No more than one broken weld on the D8 wires will be allowed per mat. One broken weld can be repaired by tying a 180 degree mild reinforcement bar (hair pin stirrup) adjacent to the broken weld. Any mat with more than one broken weld will be rejected.

E. Welded Wire Reinforcement Tolerances

1. Sheet Width: The permissible variation shall not exceed 1/2 inch, center-to-center distance between outside longitudinal wires.

2. Overall Width: The permissible variation shall not exceed 1 inch of the overall width (tip-to-tip length of transverse wire).

3. Sheet Length: The overall length may vary by 1 inch or 1% whichever is greater.

4. Side Overhang: The permissible variation shall not exceed 1/2 inch.

5. Wire Spacing: Center-to-center distance between parallel wires shall not exceed +/- 1/2".

F. Prior to placement of concrete, all welded wire reinforcement shall be free of contaminants that may adversely affect or reduce bond, such as oil or grease.

1.1 Sampling and Testing

A. Certify specified in Section 106.03 (b) 3.

B. When requested by the Department and in advance of production, furnish one or more samples of WWR, at least 4' long and containing a sufficient number of intersections for verification of the Part 7. Mechanical Property Requirements of AASHTO M221, including weld shear strength. Samples must be representative of a weld shear mat.

C. Prestressed Beam Fabricator shall be responsible for geometric verification of WWR mats.

2.0 WELDED WIRE REINFORCEMENT

A. Deformed Welded Wire Reinforcement:

1. WWR Yield Strength: Provide minimum yield strength of 70,000 psi:

2. Wire Spacing and Size: Provide wire spacing and size, as required to maintain the specified area of steel as indicated on the contract drawings.

3. Welded Wire Reinforcement shall be furnished in flat sheets or fabricated into bent sheets as indicated in the shop documents.

4. When a larger wire is welded to a smaller wire the area of the smaller wire shall be at least 40% of the area of the larger wire.

B. Standard Wire Properties

Wire Size	Unit Weight (lbs/lin. foot)	Diameter (in)	Cross-sectional Area (in^2)
D8	0.272	0.319	0.080
D13	0.442	0.407	0.130
D20(#4)	0.680	0.505	0.200
D31(#5)	1.050	0.628	0.310

PENNDOT DRAWING 13-601-BDTD, REV. 1

Mark	Description	By	Chk'd	App'd	Date
1	1. Added long. steel that is not welded to shear stirrups 2. Added a bent steel option for bottom confinement rebar	GL	GPG	TPM	1/17/14

REVISIONS

4/11/13

PENNSYLVANIA
DEPARTMENT OF TRANSPORTATION
RECOMMENDED

Thomas P Macioce

CHIEF BRIDGE ENGINEER

CENTRAL ATLANTIC BRIDGE ASSOCIATES (CABA)

NORTHEAST PRESTRESSED PRODUCTS, LLC
121 RIVER STREET
CRESSONA, PENNSYLVANIA, 17929
570-385-2352

COMMONWEALTH OF PENNSYLVANIA
DEPARTMENT OF TRANSPORTATION

PA BULB-TEE BEAM
WWR DETAILS
STANDARD

DATE: XX
SCALE: N/A
DWG: CK'D:
JOB NO.
SHEET NO. 1 of 3

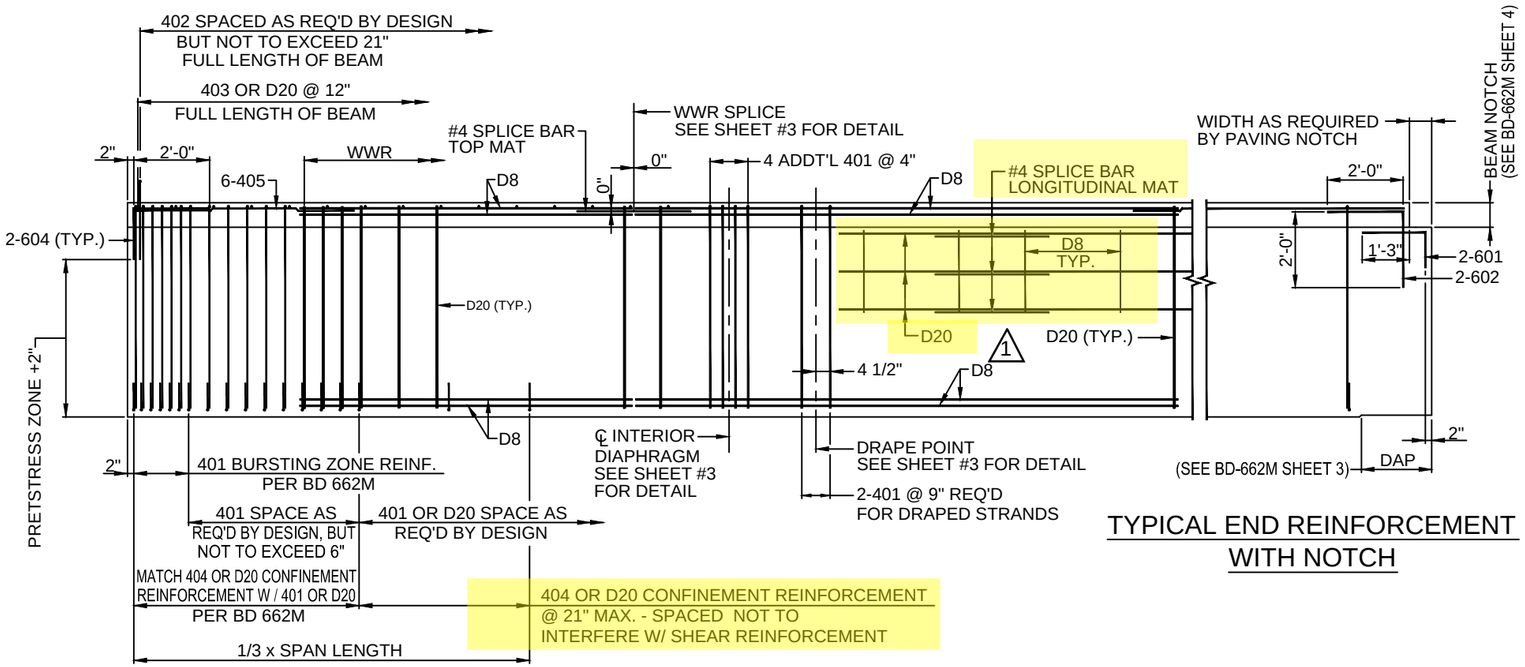

TYPICAL END REINFORCEMENT WITHOUT NOTCH

PA BULB-TEE BEAM - ELEVATION

TYPICAL END REINFORCEMENT WITH NOTCH

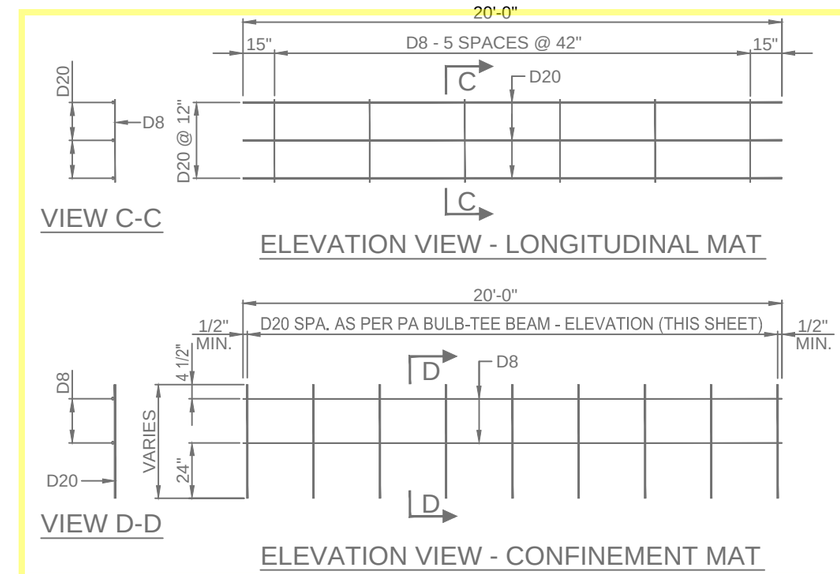

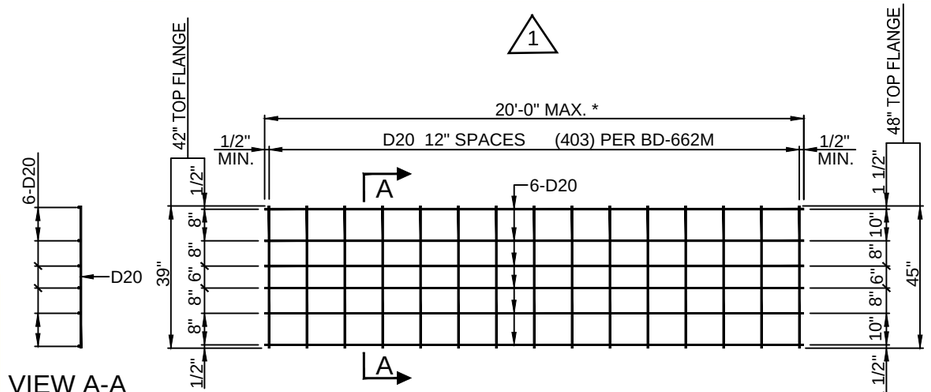

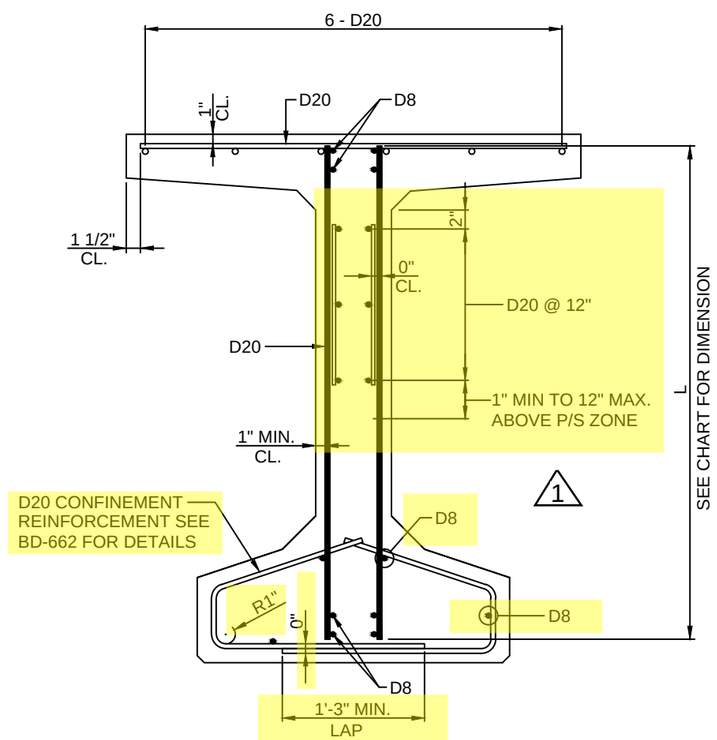

PA BULB-TEE BEAM - WWR SECTION

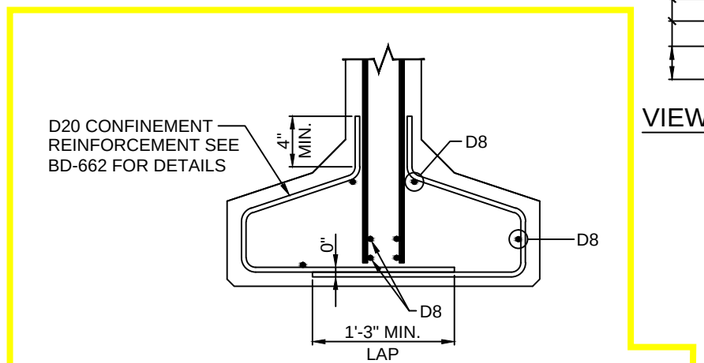

OPTIONAL D20 CONFINEMENT REINFORCEMENT

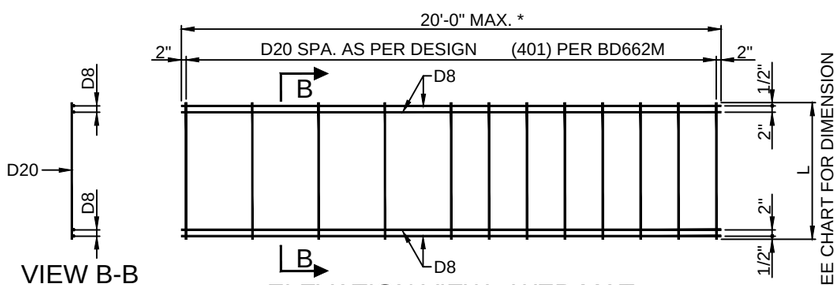

1

BEAM DEPTH	L	BEAM DEPTH	L	BEAM DEPTH	L	BEAM DEPTH	L
29.25	25	29.5	25	31.25	27	31.5	27
37.25	33	37.5	33	39.25	35	39.5	35
45.25	41	45.5	41	47.25	43	47.5	43
53.25	49	53.5	49	55.25	51	55.5	51
61.25	57	61.5	57	63.25	59	63.5	59
69.25	65	69.5	65	71.25	67	71.5	67
77.25	73	77.5	73	79.25	75	79.5	75
85.25	81	85.5	81	87.25	83	87.5	83
93.25	89	93.5	89	95.25	91	95.5	91
7" BOTTOM FLANGE				9" BOTTOM FLANGE			
ALL VALUES ARE IN INCHES							

PENNDOT DRAWING 13-601-BDTD, REV. 1

Mark	Description	By	Chk'd	App'd	Date
1	1. Added long. steel that is not welded to shear stirrups 2. Added a bent steel option for bottom confinement rebar	GL	GPG	TPM	1/17/14

REVISIONS

CENTRAL ATLANTIC BRIDGE ASSOCIATES (CABA)

NORTHEAST PRESTRESSED PRODUCTS, LLC
121 RIVER STREET
CRESSONA, PENNSYLVANIA, 17929
570-385-2352

COMMONWEALTH OF PENNSYLVANIA
DEPARTMENT OF TRANSPORTATION

PA BULB-TEE BEAM
WWR DETAILS
STANDARD

DATE: XX
SCALE: N/A
DWG: CK'D:
JOB NO.
SHEET NO. 2 of 3

4/11/13

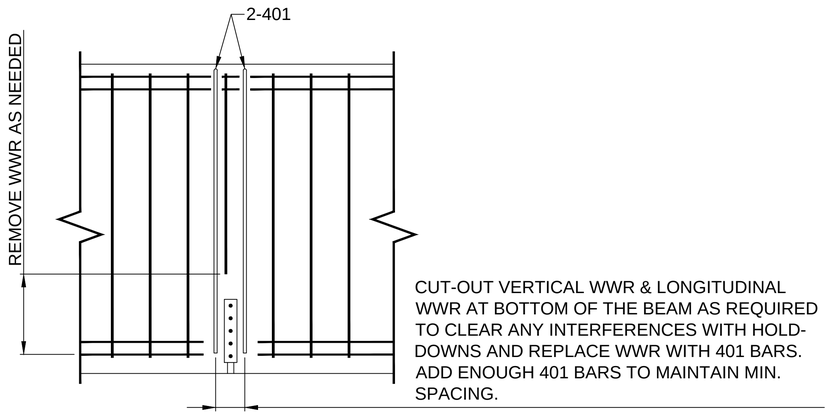

ELEVATION

WWR MODIFICATION DETAIL AT HOLD DOWNS

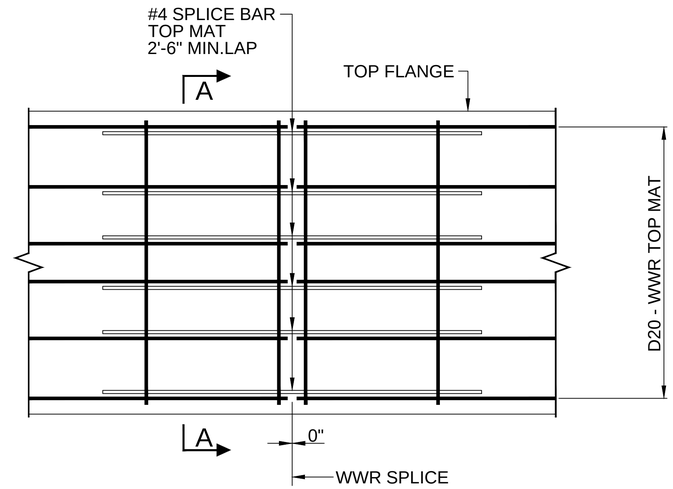

PLAN VIEW - TOP FLANGE MAT SPLICE DETAIL

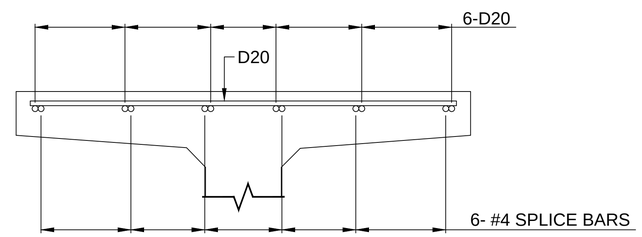

SPLICE BAR - SECTION A-A

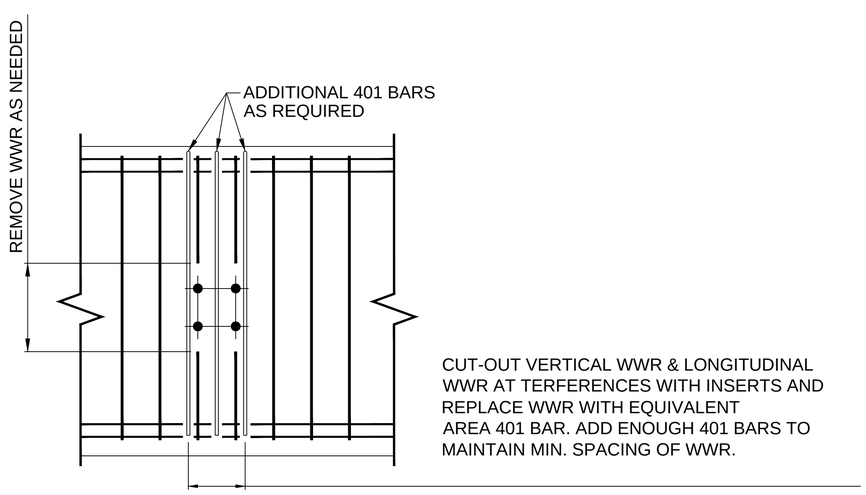

ELEVATION

WWR MODIFICATION DETAIL AT SHEAR WIRE INTERFERANCE

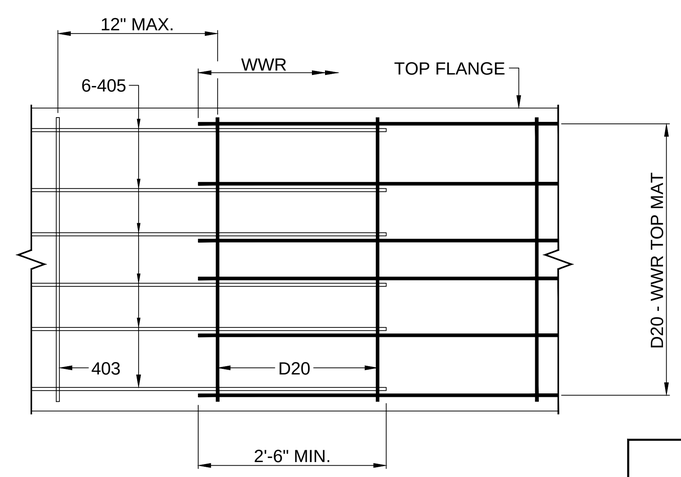

PLAN VIEW - TOP FLANGE MAT WWR TO REBAR SPLICE DETAIL

4/11/13

PENNDOT DRAWING 13-601-BDTD, REV. 1

Mark	Description	By	Chk'd	App'd	Date
1	1. Added long. steel that is not welded to shear stirrups 2. Added a bent steel option for bottom confinement rebar	GL	GPG	TPM	1/17/14

REVISIONS

CENTRAL ATLANTIC BRIDGE ASSOCIATES (CABA)

NORTHEAST PRESTRESSED PRODUCTS, LLC
121 RIVER STREET
CRESSONA, PENNSYLVANIA, 17929
570-385-2352

COMMONWEALTH OF PENNSYLVANIA
DEPARTMENT OF TRANSPORTATION

PA BULB-TEE BEAM
WWR DETAILS
STANDARD

DATE: XX
SCALE: N/A
DWG: CK'D:
JOB NO.
SHEET NO. 3 of 3

Product:
Spliced Prestressed Concrete Girder Standards
Central Atlantic Bridge Associates (CABA)
PennDOT Drawing # 12-601-BDTD

Approval Date:	**Initiated By SOL:**
May 1, 2013	483-13-05[(1)]

Application/Use:

Spliced Prestressed Concrete Girder Standards developed by Central Atlantic Bridge Associates has been approved for use as Design Build Projects or as an Alternate Bridge Type at the discretion of the District Executive. This bridge type should not be included as the "As-Designed" Bridge without approval of the Chief Bridge Engineer.

- Minimum and Maximum length of a Continuous Unit: 500 feet (min), 1,510 feet (max)
- Minimum and Maximum end span length: 160 feet (min), 215 feet (max)
- Minimum and Maximum inner span length: 200 feet (min), 270 feet (max)
- Maximum PA Bulb Tee Size: 33 x 95.5
- Maximum end beam length: 154 feet
- Maximum drop-in beam length: 148 feet
- Minimum pier beam length: 120 feet
- Maximum pier beam depth: 10 feet
- Maximum beam segment weight: 115 tons
- Maximum single tendon length: 900 feet (approx)
- Minimum skew angle: 70 degrees
- Horizontal alignment: Tangent sections
- Structure configuration: full continuity for both superimposed deadload and liveload

The Spliced Prestressed Concrete Girders are to be designed/analyzed to meet AASHTO, Design Manual, Part 4 criteria, and these standards provided details, erection alternates and grouting specifications. A Load Rating Table and Rating Procedure must be incorporated on the Contract Drawings based on both the actual post-tensioned tendon configuration and an equivalent number of single strand configuration. Contact the Bridge Design & Technology Division (BDTD) for design and/or analysis questions.

As part of the construction contract, a special provision is to be included requiring the contractor to use a design engineer as well as an independent peer review engineer. The independent peer review engineer is to ensure the final moments, shears and deflections are accurate. In addition, the erection method, creep and shrinkage analysis and re-decking analysis need to be designed in design stage and reviewed by the independent peer review engineer.

Specifications:

Design/Material/Construction Specifications for this product are specified on PennDOT Drawing 12-601-BDTD dated on May 1, 2013 for your use.

Comments:

(1) BDTD revised the previously issued drawings to incorporate two (2) changes on the grout requirements to meet state of practice.

STANDARD DRAWINGS FOR SPLICED GIRDERS

INTRODUCTION

THESE PLANS ARE INTENDED TO SERVE AS THE BASIS FOR STANDARDIZING THE DESIGN, DETAILING, FABRICATION, AND ERECTION OF PLANT-CAST PRECAST, PRETENSIONED CONCRETE GIRDERS THAT HAVE BEEN SEGMENTED FOR TRANSPORTATION AND ERECTION PURPOSES AND ASSEMBLED AT THE PROJECT SITE USING POST-TENSIONING TECHNOLOGY. THE SCOPE OF THIS PHASE OF THE DEVELOPMENT OF SPLICED GIRDER STANDARDS IS LIMITED TO THE SEGMENTATION OF A 3, 4, 5 OR 6 SPAN BRIDGE ALTERNATE USING VARIABLE DEPTH PIER SEGMENTS AND CONSTANT DEPTH DROP-IN SEGMENTS. SEGMENTATION IS ASSUMED TO RESULT IN MULTIPLE PIECES OF VARYING LENGTH. ASSEMBLY OF THE SEGMENTS IS ASSUMED TO TAKE PLACE ON FALSEWORK IN THE GIRDERS FINAL POSITION IN THE BRIDGE.

WHILE THESE STANDARDS HAVE BEEN DEVELOPED TO BE APPLICABLE FOR A TYPICAL RANGE OF VARIATION OF PROJECT PARAMETERS, IT SHOULD BE RECOGNIZED THAT THE DESIGN CRITERIA AND THE PARTICULAR GEOMETRY FOR A BRIDGE PROJECT MAY NECESSITATE THAT THE DETAILS CONTAINED HEREIN BE ADAPTED TO CONFORM TO THE SPECIFICS OF THE PROJECT. PROPER ENGINEERING JUDGEMENT MUST BE USED IN ALL CASES.

GENERAL NOTES

1. SPECIFICATIONS

PENNDOT DESIGN MANUAL DM-4.
AASHTO LRFD BRIDGE DESIGN SPECIFICATIONS, CURRENT EDITION.
PENNDOT SPECIFICATIONS, PUBLICATION 408/CURRENT EDITION.

1.1 DESIGN CRITERIA

FOR THE BEAM PRESTRESSING SEGMENT DESIGN, USE APPROPRIATE CONSTRUCTION LOAD OF AASHTO SECTION 5.14.2.3.2 AS THE DESIGN LOAD. THE BEAM SEGMENT DESIGN IS SPECIFIED IN AASHTO SECTION 5.14.13.3.

DESIGN THE BEAMS AND POST-TENSIONING WITH PENNDOT APPROVED SOFTWARE.

DESIGN LIVE LOADS AND DEAD LOADS IN ACCORDANCE WITH DM-4 SECTION PP1.7.

2. MATERIALS

2.1 CONCRETE

MINIMUM 28-DAY STRENGTH:
GIRDER SEGMENTS: 8.0 KSI
CLOSURE POURS: 5.0 KSI

2.2 REINFORCING STEEL

GRADE 60 REINFORCING STEEL BARS THAT MEET THE REQUIREMENTS OF ASTM A 615/A 615M-96A, A 996/A 996M OR 706/A 706M-96-B.

MINIMUM LAP AND EMBEDMENT LENGTH OF 30 DIAMETERS OR IN ACCORDANCE WITH AASHTO, AS MODIFIED BY DM-4, WHICHEVER IS GREATER.

2.3 PRESTRESSING STEEL

2.3.1 PRETENSIONING

UNCOATED 7-WIRE LOW-RELAXATION STRANDS MEETING THE REQUIREMENTS OF ASTM A416 GRADE 270, MODULUS OF ELASTICITY 28,000 KSI SHALL BE USED.

2.3.2 POST-TENSIONING

2.3.2.1 GENERAL

UNCOATED 7-WIRE LOW-RELAXATION STRANDS MEETING THE REQUIREMENTS OF ASTM A416 GRADE 270, MODULUS OF ELASTICITY 28,000 KSI SHALL BE USED.
MODULUS OF ELASTICITY: 28,000 KIPS
MINIMUM JACKING STRESS: 218 KSI
MAXIMUM ANCHORING STRESS AS ANCHORAGE: 189 KSI
ANCHOR SET: 3/8"
FRICTION COEFFICIENT: 0.25
WOBBLE COEFFICIENT: 0.0002 RAD/FT

2.3.2.2 ACCEPTANCE TESTING OF SPECIAL ANCHORAGE DEVICES.

SPECIAL ANCHORAGE DEVICES SHALL COMPLY WITH THE TESTING REQUIREMENTS OF ARTICLE 10.3.2.3 OF THE AASHTO LRFD CONSTRUCTION SPECIFICATIONS.

2.4 DUCTS

USE CORRUGATED PLASTIC POST-TENSIONING DUCTS WHERE APPLICABLE. CORRUGATED GALVANIZED STEEL DUCTS MUST BE USED WHEN REQUIRED TO MEET AASHTO ALLOWABLE RADIUS LIMITS.

2.4.1 PLASTIC DUCTS

CORRUGATED DUCT MANUFACTURED FROM NON-COLORED, UNFILLED POLYPROPYLENE MEETING THE REQUIREMENTS OF ASTM D4101 STANDARD SPECIFICATION FOR POLYPROPYLENE PLASTIC INJECTION AND EXTRUSION MATERIALS WITH A CELL CLASSIFICATION RANGE OF PP0340B14541 TO PP0340B67884 SHALL BE USED. THE DUCT SHALL BE WHITE IN COLOR CONTAINING ANTIOXIDANT(S) WITH A MINIMUM OXIDATION INDUCTION TIME (OIT) ACCORDING TO ASTM D 3895 OF 20 MINUTES AND CONTAINING A NON-YELLOWING LIGHT STABILIZER. THE MAXIMUM DIAMETER OF THE DUCT SHALL BE 3 1/4" WITH A WALL THICKNESS OF 0.10". THE AREA OF THE DUCT SHALL BE AT LEAST TWICE THE NET AREA OF THE PRESTRESSING STEEL IN THE DUCT.

CARE SHALL BE USED IN HANDLING AND INSTALLING DUCTS DURING THE FABRICATION PROCESS. DUCT ENDS SHALL BE CAPPED DURING CONCRETING OPERATIONS AND DURING SHIPPING TO PROTECT AGAINST INFILTRATION OF FOREIGN MATTER. DUCTS SHALL BE PROTECTED FROM DAMAGE AND SHIELDED FROM PROLONGED EXPOSURE TO SUNLIGHT DURING STORAGE, SHIPPING, AND DURING THE SEGMENT ASSEMBLY PROCESS.

2.4.2 METAL DUCTS

METAL DUCTS SHALL BE CORRUGATED GRADE 60 GALVANIZED IN CONFORMANCE WITH ASTM A653. DUCT WALLS SHALL HAVE A MINIMUM THICKNESS OF 24 GAUGE.

2.5 GROUT

ONLY GROUTS LISTED IN PENNDOT BULLETIN 15, APPROVED CONSTRUCTION MATERIALS SHALL BE USED.

3. DESIGN

3.1 GIRDER SHAPE AND SIZE

PENNDOT BULB TEE GIRDERS SERVE AS THE BASIS FOR THESE STANDARDS. PENNDOT GIRDER TYPE 33/87.5 WAS USED TO DEVELOP THE DRAWINGS AND DETAILS CONTAINED HEREIN. HOWEVER, THESE DETAILS ARE GENERALLY APPLICABLE TO SHORTER MEMBERS OF THIS GIRDER FAMILY WITH AN 8" OR THICKER WEB AND WITH BULB AND FLANGE GEOMETRIES THAT CAN ACCOMMODATE THE REQUIRED REINFORCEMENT.

3.2 SEGMENT DESIGN

GIRDER SEGMENTS SHALL BE DESIGNED TO RESIST BEAM SELF-WEIGHT PLUS HANDLING AND CONSTRUCTION LOADS AS PER THE SPECIFICATIONS. PRETENSIONING IS ASSUMED TO BE THE PRIMARY FLEXURAL REINFORCEMENT FOR THE SEGMENTS. STRAND PATTERN PROFILES SHALL BE STRAIGHT.

3.3 ASSEMBLED GIRDER

PRIMARY FLEXURAL REINFORCEMENT RESISTING LOADS APPLIED TO THE GIRDER IN ITS FINAL CONFIGURATION IS ASSUMED TO BE POST-TENSIONING. DETAILS AND DUCT LAYOUTS SHOWN IN THESE STANDARDS ARE PRESENTED AS TYPICAL. THE ACTUAL NUMBER, SIZE, AND LAYOUT OF TENDONS ARE PROJECT-SPECIFIC. MINIMUM DUCT SPACING SHALL BE 5", THE OUTER DUCT DIAMETER PLUS 1.5 TIMES MAXIMUM AGGREGATE SIZE, OR THE OUTER DUCT DIAMETER PLUS 2", WHICHEVER IS GREATER. SIZE AND SPACING OF NON-PRESTRESSED REINFORCEMENT SHALL BE AS PER PROJECT REQUIREMENTS.

CONSTRUCTION AND WIND LOADS AND ALL OTHER LOADS THAT ACT ON THE GIRDERS THAT MAY CAUSE LATERAL-TORSIONAL INSTABILITY SHALL BE CONSIDERED IN THE DESIGN OF THE GIRDER AND THE DESIGN OF THE CONSTRUCTION AND ERECTION SCHEMES.

TEMPORARY PRESTRESSING MAY BE NECESSARY FOR THE HANDLING, TRANSPORTATION AND ERECTING OF GIRDERS. THE ENGINEER SHALL EVALUATE THE NEED FOR TEMPORARY PRESTRESSING BASED ON PROJECT SPECIFIC CONDITIONS.

3.4 ANCHORAGE ZONES

LOCAL ZONE REINFORCEMENT SHALL BE DESIGNED BY THE POST-TENSIONING SYSTEM SUPPLIER. GENERAL ZONE REINFORCEMENT SHALL BE DESIGNED BY THE ENGINEER.

4. SEGMENT FABRICATION

4.1 FABRICATION TOLERANCES

FABRICATION TOLERANCES SHALL BE IN ACCORDANCE WITH SECTION 1107 OF THE PENNDOT SPECIFICATIONS, PUBLICATION 408. ADDITIONALLY VERTICAL AND HORIZONTAL POSITION OF DUCT SHALL BE ±1/8".

4.2 FORMING

METAL SIDE FORMS SHALL BE USED FOR SEGMENT FABRICATION. CARE SHALL BE TAKEN TO ENSURE THAT SEGMENT ENDS AND ALL EXTENDED STRANDS, REINFORCEMENT, AND DUCTS MATCH TO THE CORRESPONDING ENDS OF ADJACENT SEGMENTS.

4.3 DUCTS

MAXIMUM SPACING OF SUPPORT BARS FOR THE POST-TENSIONING DUCTS SHALL BE 2'-0". DUCTS SHALL BE AIR-TESTED PRIOR TO CONCRETE PLACEMENT. UPON COMPLETION OF CONCRETE PLACEMENT, POST-TENSIONING DUCTS SHALL BE DEMONSTRATED TO BE FREE AND CLEAR OF ANY OBSTRUCTIONS OR DAMAGE AND ARE ABLE TO ACCEPT THE INTENDED POST-TENSIONING TENDONS BY PASSING A TORPEDO THROUGH THE DUCTS. TORPEDO HAVING THE SAME CROSS-SECTIONAL SHAPE AS THE DUCT AND BE 1/4" SMALLER ALL AROUND THAN THE CLEAR, NOMINAL INSIDE DIMENSION OF THE DUCT.

4.4 PRETENSIONING

GIRDER LENGTHS SHALL BE INCREASED AS NECESSARY TO COMPENSATE FOR SHORTENING DUE TO PRETENSIONING AND POST-TENSIONING AND SHRINKAGE.

EXCEPT FOR EXTENDED STRANDS AS SHOWN, CUT ALL REMAINING STRANDS 1" BELOW SURFACE OF GIRDER END AND PAINT WITH AN APPROVED EPOXY RESIN.

4.5 SURFACE TREATMENTS

4.5.1 TOP OF GIRDER

THE TOP SURFACE OF THE GIRDER FLANGE SHALL RECEIVE A RAKED FINISH TO 1/4" AMPLITUDE.

4.5.2 SEGMENT ENDS

SEGMENT ENDS OF CLOSURE POURS SHALL HAVE A SAWTOOTH SURFACE TREATMENT AND PROTRUDING REINFORCEMENT AS DETAILED IN THESE STANDARDS.

5. SEGMENT ASSEMBLY

5.1 SEGMENT HANDLING

SEGMENTS SHALL ONLY BE HANDLED, HAULED, AND STORED IN AN UPRIGHT POSITION. ONLY LIFTING LOOPS OR DEVICES PROVIDED AND ENDS SHALL BE USED TO HANDLE THE SEGMENTS.

5.2 SEGMENT ALIGNMENT

SEGMENTS SHALL BE SET ON PERMANENT SUPPORTS AND FALSEWORK FOUNDED ON LEVEL GROUND CAPABLE OF SAFELY SUPPORTING THE REQUIRED BEARING PRESSURES. CARE SHALL BE TAKEN SO THAT SEGMENTS ARE ERECTED TO THE ELEVATIONS SHOWN ON THE PLANS. ENSURE PROPER ALIGNMENT OF SEGMENTS AT ENDS. ALIGNMENT TOLERANCES SHALL BE AS FOLLOWS:

VERTICAL: 1/8"
HORIZONTAL: 1/8"
TRANSVERSE: 1/8"

5.3 CLOSURE POUR

ALIGNMENT OF GIRDER SEGMENTS SHALL BE CHECKED IMMEDIATELY PRIOR TO PLACEMENT OF CLOSURE POUR CONCRETE.

5.4 POST-TENSIONING

GIRDERS SHALL NOT BE STRESSED UNTIL THE GIRDER AND CLOSURE POUR MEET THEIR DESIGN STRENGTHS. STRESSING SHALL COMMENCE TO THE SEQUENCE SHOWN IN THE PLANS.

CONDUCT POST-TENSIONING OPERATIONS IN ACCORDANCE WITH PUBLICATION 408, SECTION 1108.

5.5 GROUTING

GROUTING OPERATION SHALL BE COMMENCED PROMPTLY AFTER COMPLETION OF POST-TENSIONING OPERATION.

5.6 ANCHORAGE PROTECTION

PERMANENT GROUT END CAPS SHALL BE INSTALLED AND GROUTED IN ACCORDANCE WITH POST-TENSIONING SUPPLIERS RECOMMENDATIONS. ANCHORAGE RECESSES IN END GIRDER END SEGMENTS SHALL BE FILLED WITH EPOXY-MODIFIED MORTAR.

UPON COMPLETION AND INSPECTION OF GROUTING OPERATION, ANCHORAGE BLOCK-OUTS SHALL BE FILLED WITH EPOXY-MODIFIED GROUT.

6. HANDLING AND ERECTION OF ASSEMBLED GIRDER

STABILITY OF GIRDERS IS TO BE MAINTAINED BY THE CONTRACTOR DURING ERECTION, UNTIL ALL GIRDERS AND DIAPHRAGMS ARE IN PLACE. ERECTION LOADS INCLUDING SELF WEIGHT OF THE GIRDERS, WIND LOADING AND CONSTRUCTION LIVE LOAD EFFECTS ARE TO EVALUATED BY THE CONTRACTOR FOR STABILITY, STRESSES AND DEFLECTIONS ON THE GIRDERS DURING ANY STAGE OR ERECTION.

LIFTING MEANS AND HARDWARE SHALL BE DESIGNED BY THE CONTRACTOR AND SHALL BE INCLUDED IN THE SHOP DRAWINGS. EXTREME CAUTION SHALL BE EXERCISED IN ALL LIFTING, HANDLING, AND PLACING OPERATIONS OF GIRDERS. ADEQUATE BRACING SHALL BE USED TO ENSURE STABILITY AT ALL TIMES AGAINST TIPPING, LATERAL DEFLECTION, AND LATERAL BUCKLING. CONSTRUCTION LOADS AND WIND LOADS AND ALL OTHER LOADS THAT ACT ON THE GIRDERS TO CAUSE VERTICAL AND LATERAL INSTABILITY SHALL BE CONSIDERED IN THE DESIGN OF THE ERECTION SCHEME. CAUTION SHOULD BE EXERCISED WHEN SETTING GIRDERS ON BEARINGS TO ENSURE THAT GIRDER SWEEP IS NOT AMPLIFIED BY INADEQUATE ROTATIONAL RESISTANCE OF BEARINGS. TRANSVERSE BRACING SHOULD BE SECURELY INSTALLED BETWEEN GIRDERS PRIOR TO REMOVAL OF CRANE LOAD FROM GIRDER ENDS. ADDITIONAL INTERMEDIATE CROSS BRACING SHOULD BE INSTALLED ONCE THE GIRDER ENDS ARE SECURE.

PENNSYLVANIA
DEPARTMENT OF TRANSPORTATION
RECOMMENDED

Thomas P Macioce

CHIEF BRIDGE ENGINEER

5/1/2013

COMMONWEALTH OF PENNSYLVANIA
REGISTERED PROFESSIONAL
C. BRIAN SLAGLE
ENGINEER
PE075107

PENNDOT DRAWING 12-601-BDTD

MARK	DESCRIPTION	BY	CHK'D	RECM'D	DATE
	REVISIONS				

CENTRAL ATLANTIC BRIDGE ASSOCIATES (CABA)

JANSSEN & SPAANS ENGINEERING
9120 HARRISON PARK COURT
INDIANAPOLIS, INDIANA 46216
Business (317) 254-9696 Fax (317) 258-8382

COMMONWEALTH OF PENNSYLVANIA
DEPARTMENT OF TRANSPORTATION

DATE: 8/11
SCALE: N/A

SPLICED PRESTRESSED
CONCRETE GIRDER STANDARDS

DWN: TAL CK'D: LS
JOB NO.

OVERVIEW OF SYSTEM, INSTRUCTIONS
& GENERAL NOTES

SHEET NO.
100

Time: 13:52:6
Date: 4/6/2012
Scale: 1=1(PS)
Drawing File: 996 - Standards For Spliced I-Girders\DWGS\BRIDGE\SHT-100.dwg (TLeggan)

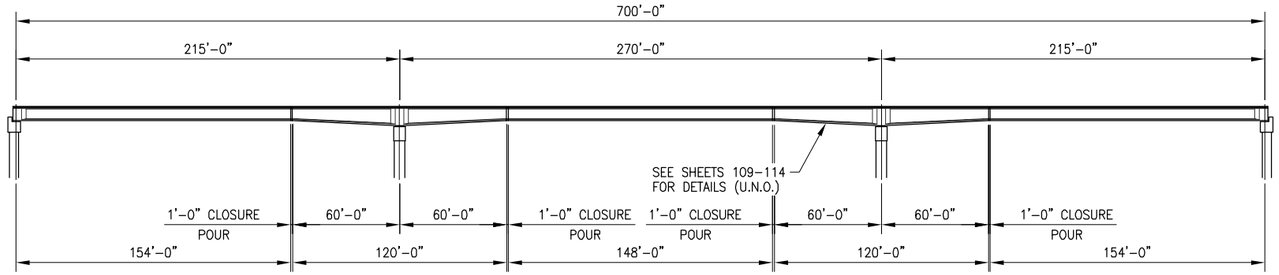

3 SPAN ALTERNATE

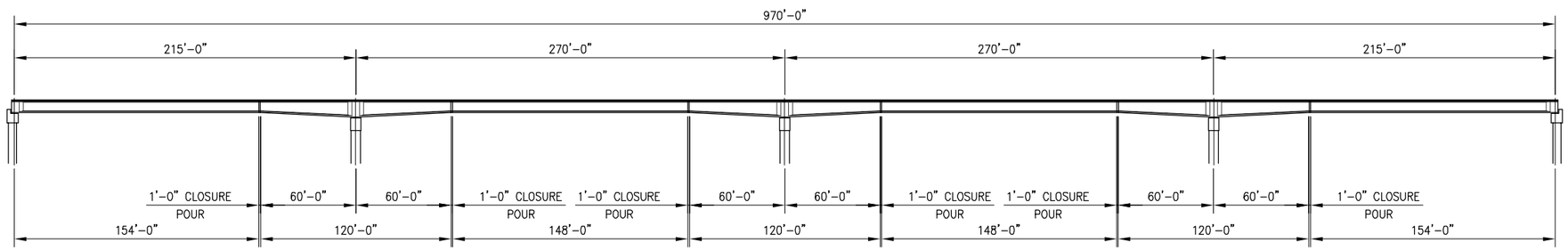

4 SPAN ALTERNATE

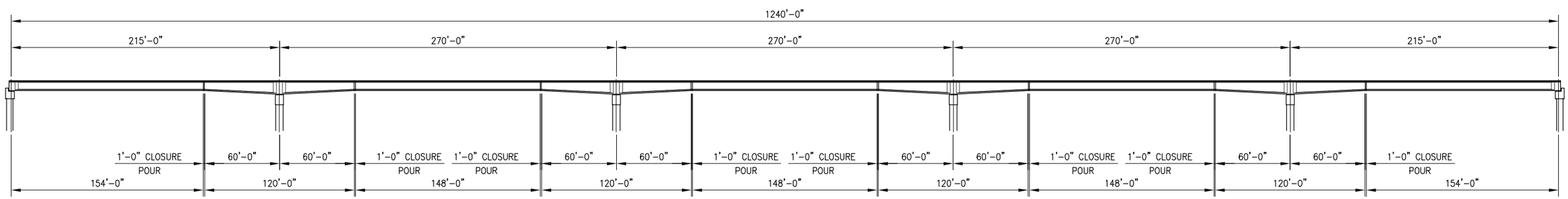

5 SPAN ALTERNATE

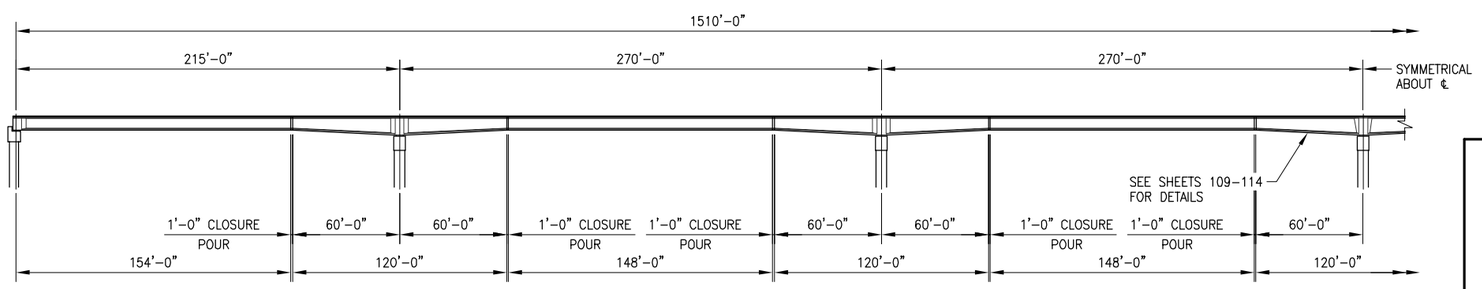

6 SPAN ALTERNATE

5/1/2013

PENNDOT DRAWING 12-601-BDTD

COMMONWEALTH OF PENNSYLVANIA
REGISTERED PROFESSIONAL
C. BRIAN SLAGLE
ENGINEER
PE075107

CENTRAL ATLANTIC BRIDGE ASSOCIATES (CABA)

JANSSEN & SPAANS ENGINEERING
9120 HARRISON PARK COURT
INDIANAPOLIS, INDIANA 46216
Business (317) 254-9696 Fax (317) 258-8282

COMMONWEALTH OF PENNSYLVANIA
DEPARTMENT OF TRANSPORTATION

SPLICED PRESTRESSED
CONCRETE GIRDER STANDARDS

–
–

DATE: 8/11
SCALE: N/A
DWN: TAL CK'D: LS
JOB NO.
SHEET NO.
101

Time: 15:36:26
Date: 3/12/2012
Scale: 1=1PS
Drawing File: 996 - Standards for Spliced I-Girders\DWGS\BRIDGE\SHT-101.dwg (TLegan)

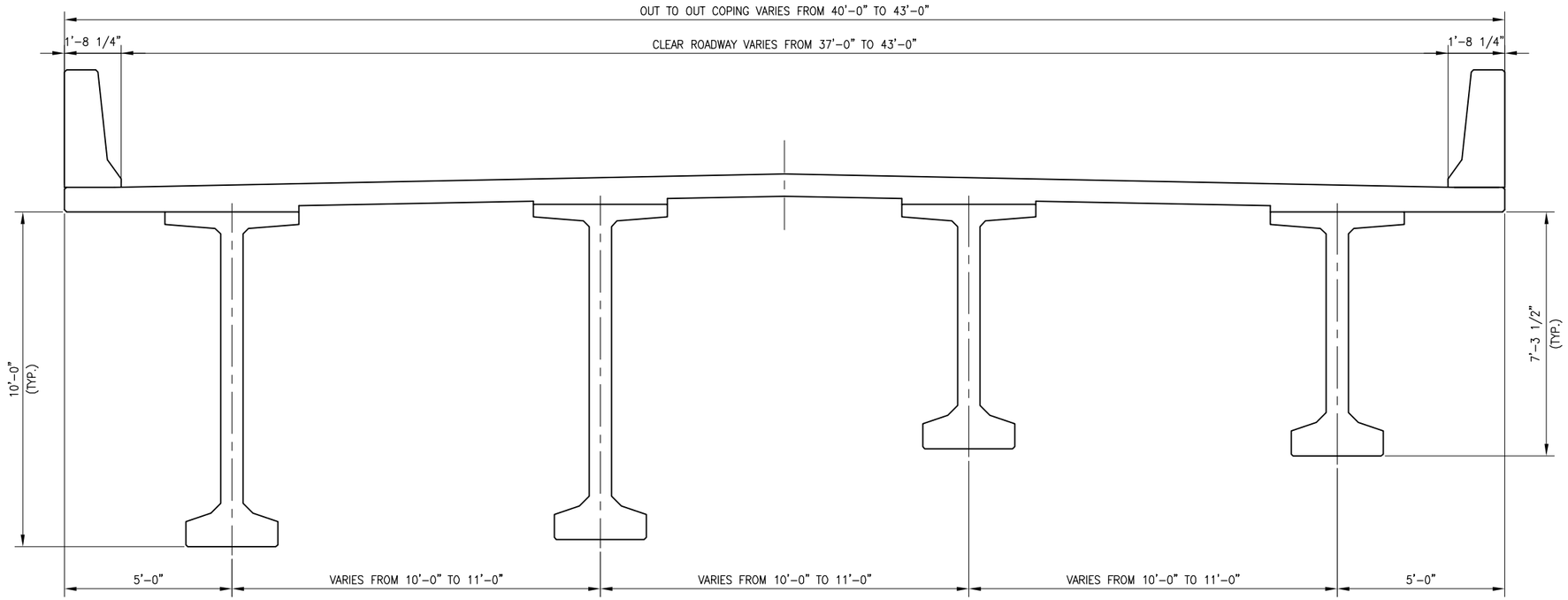

HALF SECTION AT PIER

HALF SECTION AT SPAN

TYPICAL SECTION

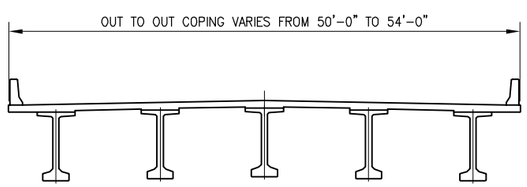

5 BEAM OPTION

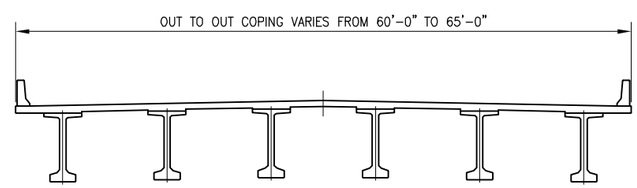

6 BEAM OPTION

5/1/2013

PENNDOT DRAWING 12-601-BDTD

COMMONWEALTH OF PENNSYLVANIA
REGISTERED PROFESSIONAL
C. BRIAN SLAGLE
ENGINEER
PE075107

CENTRAL ATLANTIC BRIDGE ASSOCIATES (CABA)

JANSSEN & SPAANS ENGINEERING
9120 HARRISON PARK COURT
INDIANAPOLIS, INDIANA 46216
Business (317) 254-9696 Fax (317) 228-4262

COMMONWEALTH OF PENNSYLVANIA
DEPARTMENT OF TRANSPORTATION

SPLICED PRESTRESSED
CONCRETE GIRDER STANDARDS

–
–

DATE: 8/11
SCALE: N/A
DWN: TAL CK'D: LS
JOB NO.
SHEET NO.
102

Time: 1536:47
Date: 3/12/2012
Scale: 1=(PS)
Drawing File: 996 - Standards for Spliced I-Girders\DWGS\BRIDGE\SHT-102.dwg (TL.pgn)

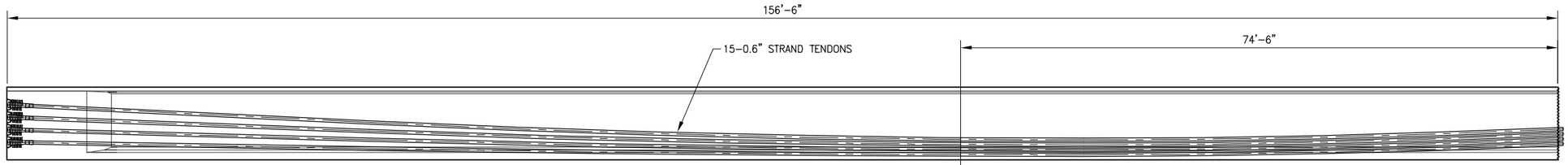

END BEAM ELEVATION

LOW POINT

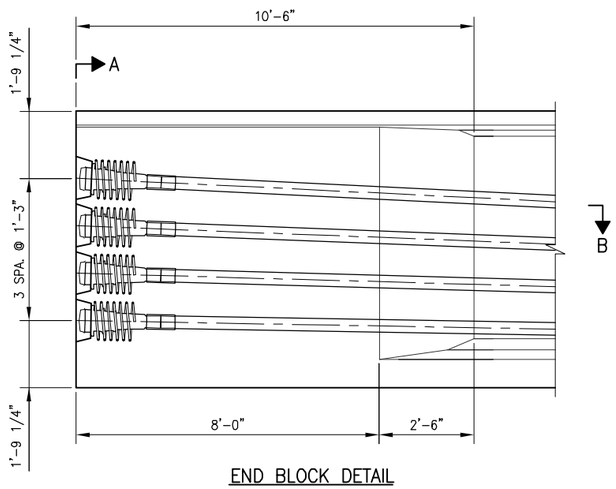

END BLOCK DETAIL

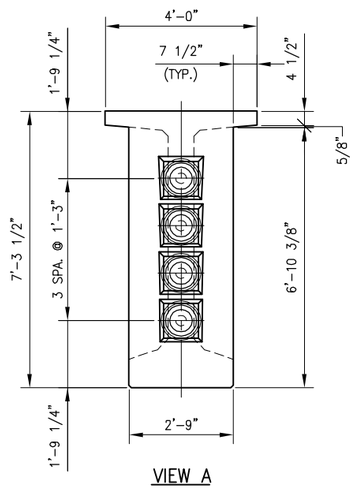

VIEW A

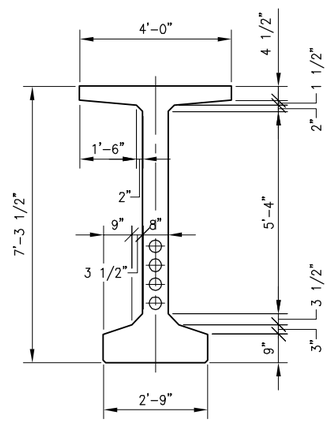

TYPICAL SECTION AT CLOSURE POUR

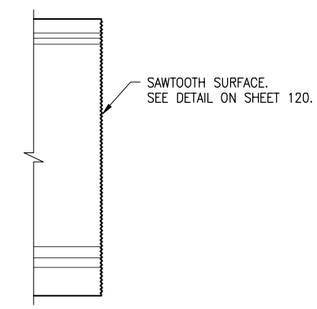

BEAM END AT CLOSURE POUR

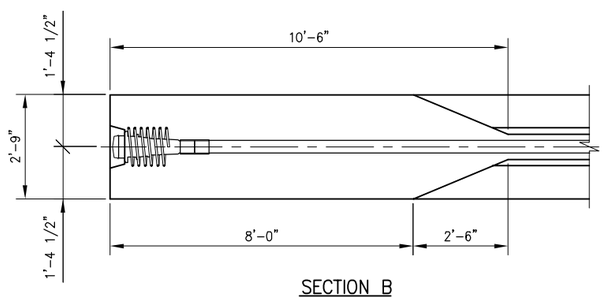

SECTION B

NOTE:
THIS STANDARD WAS DEVELOPED FOR THE PENNDOT GIRDER TYPE 33/87.5. OTHER GIRDER DEPTHS MAY BE INVESTIGATED.

5/1/2013

PENNDOT DRAWING 12-601-BDTD

COMMONWEALTH OF PENNSYLVANIA
REGISTERED PROFESSIONAL
C. BRIAN SLAGLE
ENGINEER
PE075107

CENTRAL ATLANTIC BRIDGE ASSOCIATES (CABA)	JANSSEN & SPAANS ENGINEERING 9120 HARRISON PARK COURT INDIANAPOLIS, INDIANA 46216 Business (317) 254-9696 Fax (317) 258-8262	
COMMONWEALTH OF PENNSYLVANIA DEPARTMENT OF TRANSPORTATION		DATE: 8/11
		SCALE: N/A
SPLICED PRESTRESSED CONCRETE GIRDER STANDARDS		DWN: TAL CK'D: LS
		JOB NO.
– –		SHEET NO. 103

Time: 15:37:3
Date: 3/12/2012
Scale: 1=1(PS)
Drawing File: 996 - Standards For Spliced I-Girders\DWGS\BRIDGE\SHT-103.dwg (TLegan)

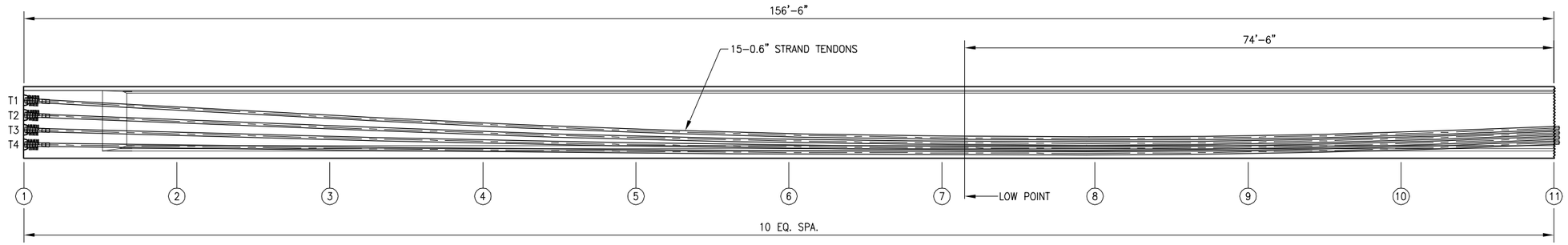

END BEAM ELEVATION

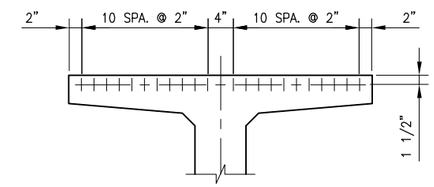

ALLOWABLE FLANGE STRAND LOCATIONS

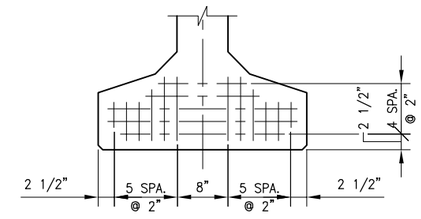

STRAND PATTERN

POST-TENSIONING GEOMETRY – END BEAM											
POINT	1	2	3	4	5	6	7	8	9	10	11
DISTANCE FROM END (ft)											
TENDON	TENDON HEIGHT (ft)										
T1											
T2											
T3											
T4											

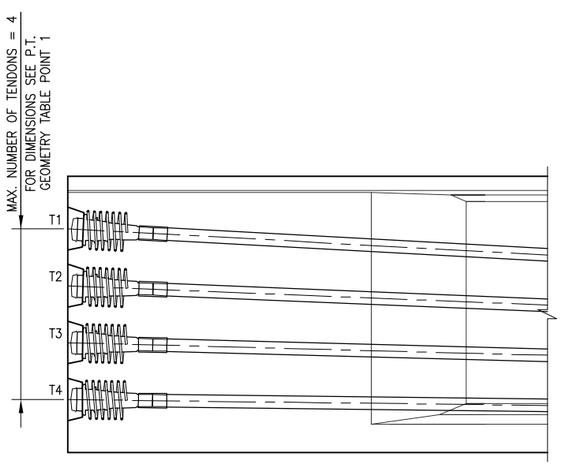

END BLOCK DETAIL

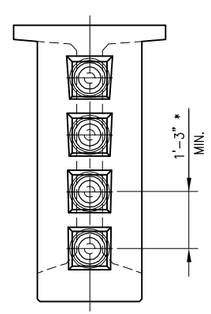

END BLOCK

* TO BE VERIFIED WITH PT SUPPLIER

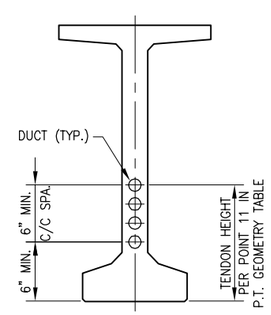

DUCTS @ BEAM END

NOTES:

1. POST-TENSIONING WORK SHALL BE IN ACCORDANCE WITH PENNDOT SPECIFICATIONS, PUBLICATION 408/2011, SECTION 1108-POST-TENSIONING OPERATIONS.
2. TENDON HEIGHTS ARE MEASURED FROM BOTTOM OF FORM TO CENTERLINE OF DUCT.
3. ALL POST-TENSIONING COMPONENTS SHALL BE PENNDOT APPROVED.
4. DUCT COUPLERS SHALL BE POSITIVELY SEALED TO PROHIBIT THE INTRUSION OF CEMENTITIOUS MATERIAL INTO THE DUCTS.
5. ANCHOR CASTING GROUT OUTLET SHALL BE POSITIONED AT HIGH POINT OF INSTALLED CASTING.

PENNDOT DRAWING 12-601-BDTD

5/1/2013

COMMONWEALTH OF PENNSYLVANIA
REGISTERED PROFESSIONAL
C. BRIAN SLAGLE
ENGINEER
PE075107

CENTRAL ATLANTIC BRIDGE ASSOCIATES (CABA)

JANSSEN & SPAANS ENGINEERING
9120 HARRISON PARK COURT
INDIANAPOLIS, INDIANA 46216
Business (317) 254-9696 Fax (317) 298-6262

COMMONWEALTH OF PENNSYLVANIA
DEPARTMENT OF TRANSPORTATION

SPLICED PRESTRESSED
CONCRETE GIRDER STANDARDS

–
–

DATE: 8/11
SCALE: N/A
DWN: TAL CK'D: LS
JOB NO.
SHEET NO.
104

Time: 15:37:21
Date: 3/12/2012
Scale: 1=(FT)
Drawing File: 996 - Standards for Spliced I-Girders\DWGS\BRIDGE\SHT-104.dwg (TL-egon)

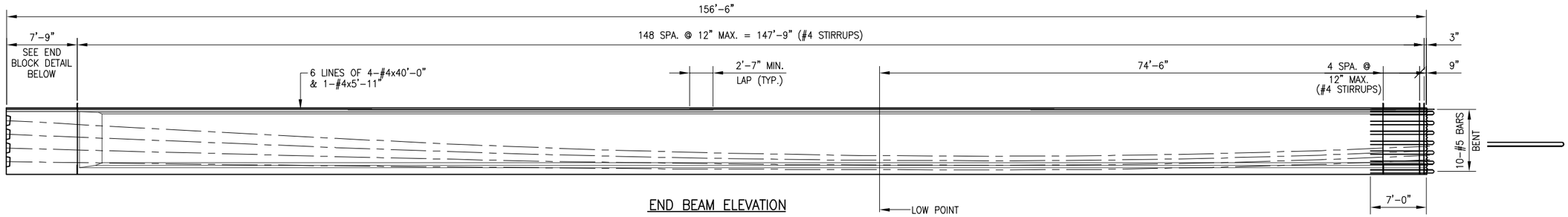

END BEAM ELEVATION

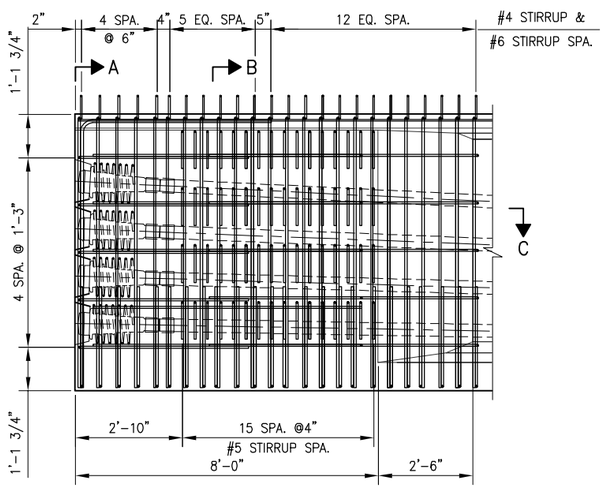

END BLOCK DETAIL

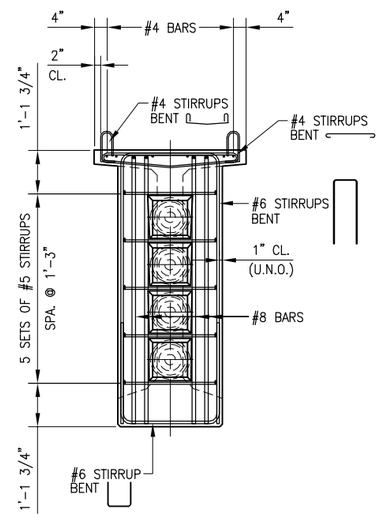

VIEW A

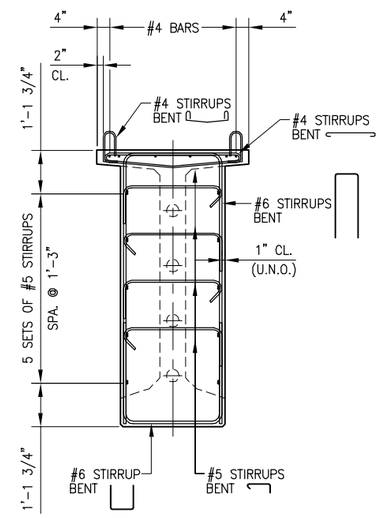

SECTION B

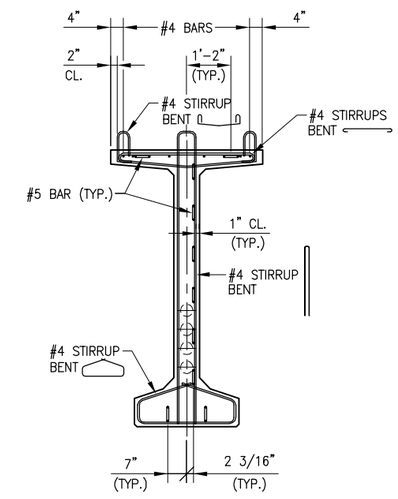

TYPICAL SECTION AT CLOSURE POUR
(LOOKING OUTWARD)

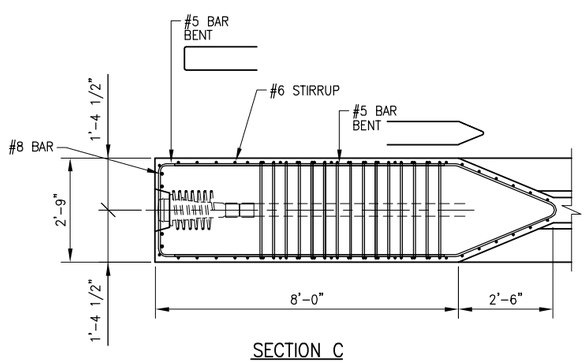

SECTION C

PENNDOT DRAWING 12-601-BDTD

5/1/2013

COMMONWEALTH OF PENNSYLVANIA
REGISTERED PROFESSIONAL
C. BRIAN SLAGLE
ENGINEER
PE075107

CENTRAL ATLANTIC BRIDGE ASSOCIATES (CABA)	JANSSEN & SPAANS ENGINEERING, 9120 HARRISON PARK COURT, INDIANAPOLIS, INDIANA 46216, Business (317) 254-9696 Fax (317) 259-6382
COMMONWEALTH OF PENNSYLVANIA DEPARTMENT OF TRANSPORTATION	DATE: 8/11
	SCALE: N/A
SPLICED PRESTRESSED CONCRETE GIRDER STANDARDS	DWN: TAL CK'D: LS
	JOB NO.
– –	SHEET NO. 105

Time: 15:37:41
Date: 3/12/2012
Scale: 1=1(PS)
Drawing File: 996 - Standards for Spliced I-Girders\DWGS\BRIDGE\SHT-105.dwg (TLegon)

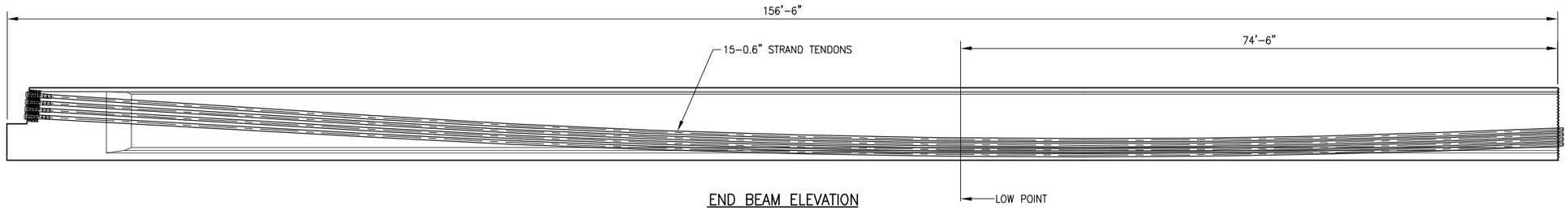

END BEAM ELEVATION

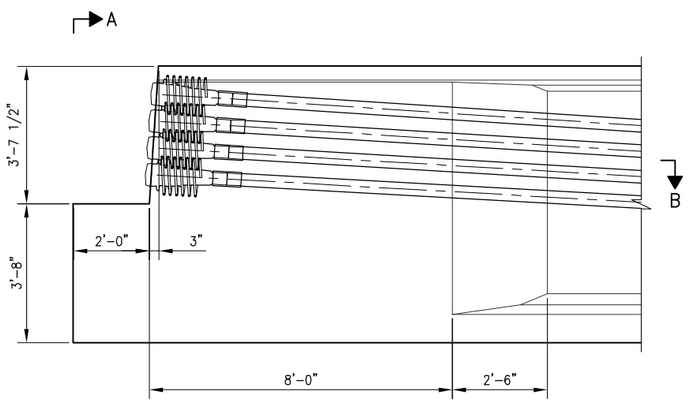

END BLOCK DETAIL

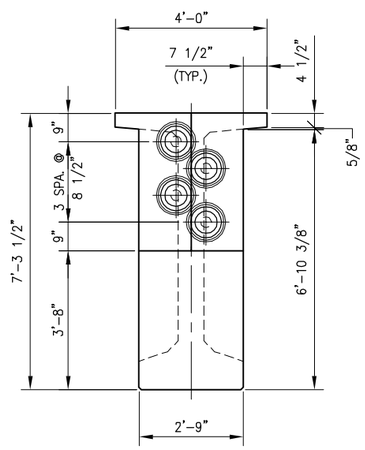

VIEW A

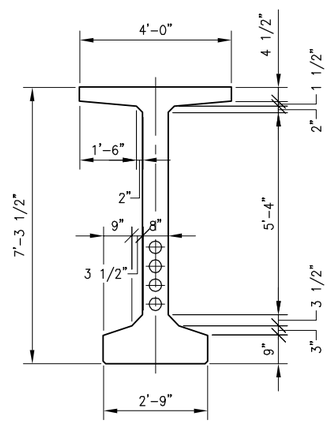

TYPICAL SECTION AT CLOSURE POUR

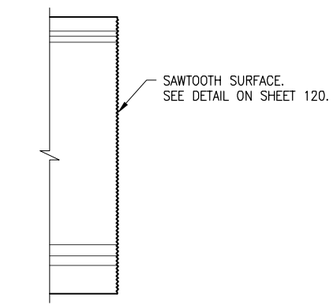

BEAM END AT CLOSURE POUR

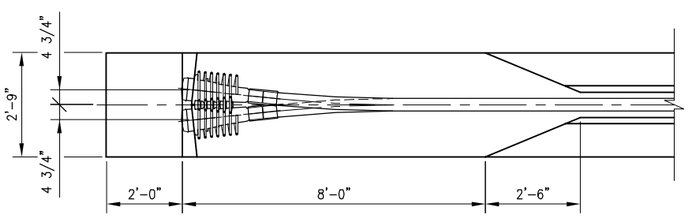

SECTION B

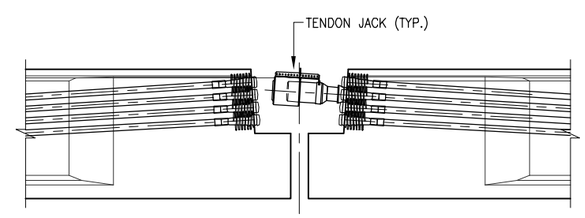

JACKING DETAIL

NOTE:
THIS STANDARD WAS DEVELOPED FOR THE PENNDOT GIRDER TYPE 33/87.5. OTHER GIRDER DEPTHS MAY BE INVESTIGATED.

5/1/2013

PENNDOT DRAWING 12-601-BDTD

COMMONWEALTH OF PENNSYLVANIA
REGISTERED PROFESSIONAL
C. BRIAN SLAGLE
ENGINEER
PE075107

CENTRAL ATLANTIC BRIDGE ASSOCIATES (CABA)	JANSSEN & SPAANS ENGINEERING 9120 HARRISON PARK COURT INDIANAPOLIS, INDIANA 46216 Business (317) 254-9696 Fax (317) 258-8262	
COMMONWEALTH OF PENNSYLVANIA DEPARTMENT OF TRANSPORTATION		DATE: 8/11
		SCALE: N/A
SPLICED PRESTRESSED CONCRETE GIRDER STANDARDS		DWN: TAL CK'D: LS
		JOB NO.
– –		SHEET NO. 106

Time: 15:37:58
Date: 3/12/2012
Scale: 1=1(PS)
Drawing File: 996 - Standards For Spliced I-Girders\DWGS\BRIDGE\SHT-106.dwg (TLegan)

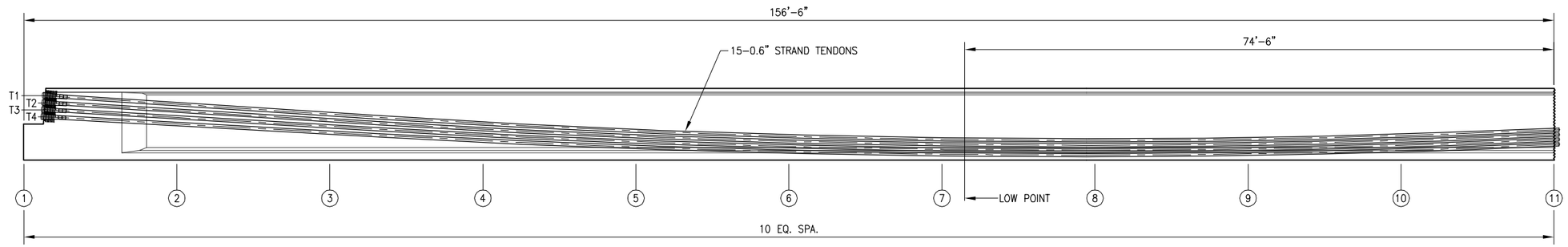

END BEAM ELEVATION

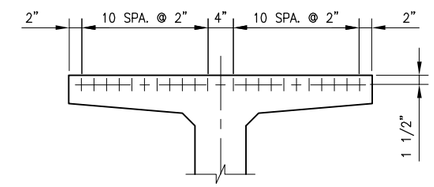

ALLOWABLE FLANGE STRAND LOCATIONS

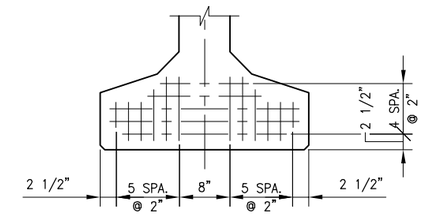

STRAND PATTERN

POST-TENSIONING GEOMETRY - END BEAM											
POINT	1	2	3	4	5	6	7	8	9	10	11
DISTANCE FROM END (ft)											
TENDON	TENDON HEIGHT (ft)										
T1											
T2											
T3											
T4											

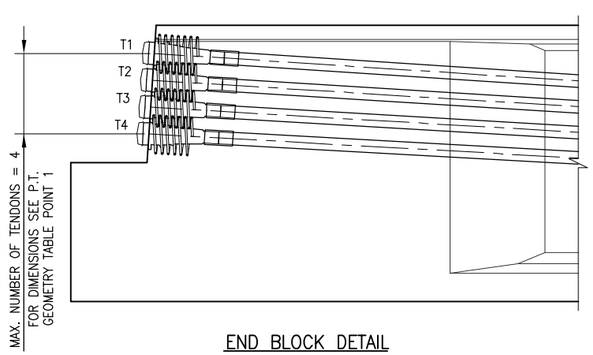

END BLOCK DETAIL

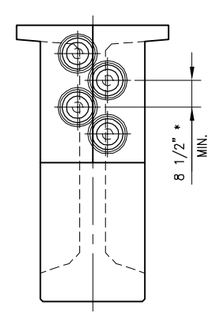

END BLOCK

* TO BE VERIFIED WITH PT SUPPLIER

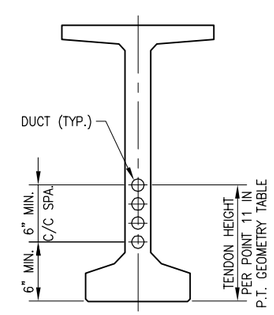

DUCTS @ BEAM END

NOTES:

1. POST-TENSIONING WORK SHALL BE IN ACCORDANCE WITH PENNDOT SPECIFICATIONS, PUBLICATION 408/2011, SECTION 1108-POST-TENSIONING OPERATIONS.
2. TENDON HEIGHTS ARE MEASURED FROM BOTTOM OF FORM TO CENTERLINE OF DUCT.
3. ALL POST-TENSIONING COMPONENTS SHALL BE PENNDOT APPROVED.
4. DUCT COUPLERS SHALL BE POSITIVELY SEALED TO PROHIBIT THE INTRUSION OF CEMENTITIOUS MATERIAL INTO THE DUCTS.
5. ANCHOR CASTING GROUT OUTLET SHALL BE POSITIONED AT HIGH POINT OF INSTALLED CASTING.

PENNDOT DRAWING 12-601-BDTD

5/1/2013

COMMONWEALTH OF PENNSYLVANIA
REGISTERED PROFESSIONAL
C. BRIAN SLAGLE
ENGINEER
PE075107

CENTRAL ATLANTIC BRIDGE ASSOCIATES (CABA)

JANSSEN & SPAANS ENGINEERING
9120 HARRISON PARK COURT
INDIANAPOLIS, INDIANA 46216
Business (317) 254-9696 Fax (317) 258-8262

COMMONWEALTH OF PENNSYLVANIA
DEPARTMENT OF TRANSPORTATION

SPLICED PRESTRESSED
CONCRETE GIRDER STANDARDS

-
-

DATE: 8/11
SCALE: N/A
DWN: TAL CK'D: LS
JOB NO.
SHEET NO.
107

Time: 15:38:19
Date: 3/12/2012
Scale: 1=(FS)
Drawing File: 996 - Standards for Spliced I-Girders\DWGS\BRIDGE\SHT-107.dwg (TL-egun)

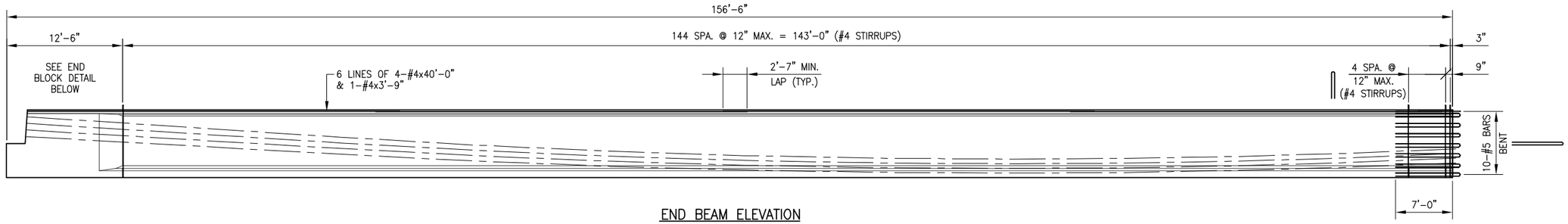

END BEAM ELEVATION

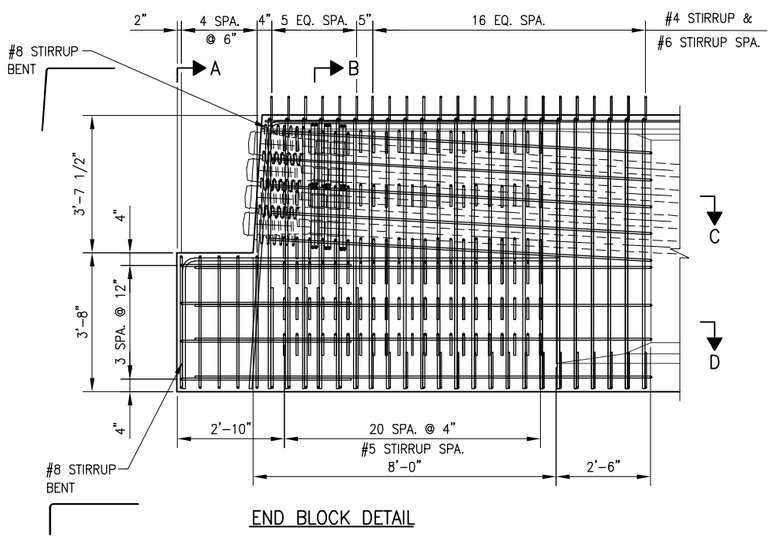

END BLOCK DETAIL

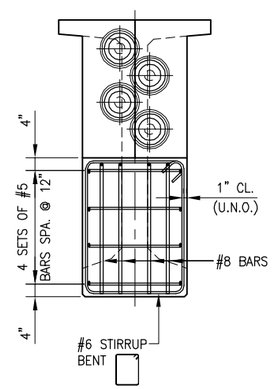

VIEW A

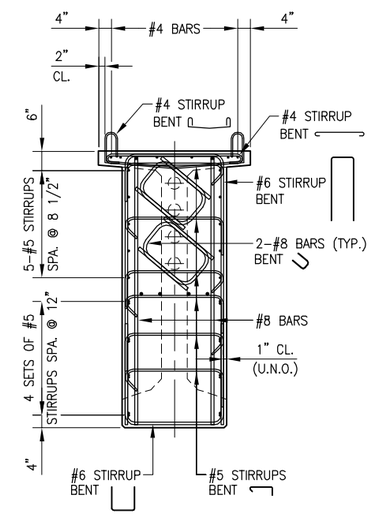

SECTION B

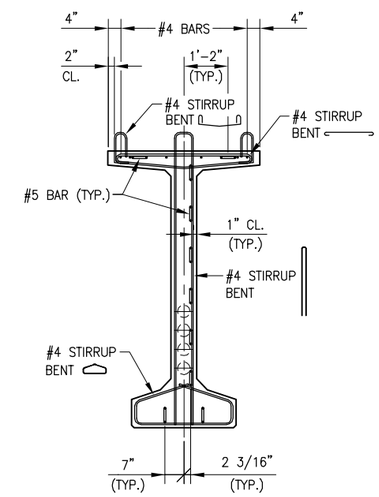

TYPICAL SECTION AT CLOSURE POUR
(LOOKING OUTWARD)

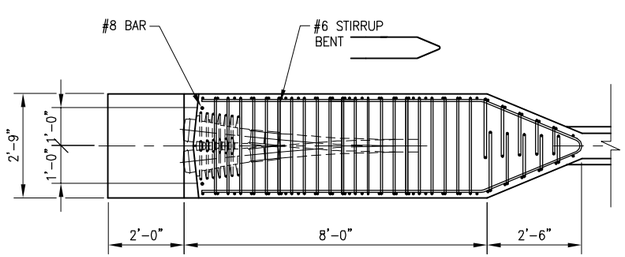

SECTION C

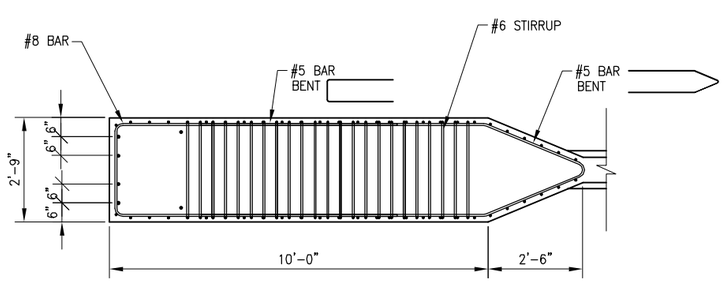

SECTION D

PENNDOT DRAWING 12-601-BDTD

5/1/2013

COMMONWEALTH OF PENNSYLVANIA
REGISTERED PROFESSIONAL
C. BRIAN SLAGLE
ENGINEER
PE075107

CENTRAL ATLANTIC BRIDGE ASSOCIATES (CABA)	JANSSEN & SPAANS ENGINEERING, 9120 HARRISON PARK COURT, INDIANAPOLIS, INDIANA 46216, Business (317) 254-9696 Fax (317) 258-8282
COMMONWEALTH OF PENNSYLVANIA DEPARTMENT OF TRANSPORTATION	DATE: 8/11
	SCALE: N/A
SPLICED PRESTRESSED CONCRETE GIRDER STANDARDS	DWN: TAL CK'D: LS
	JOB NO.
– –	SHEET NO. 108

Time: 15:38:39
Date: 3/12/2012
Scale: 1=1PS3
Drawing File: 996 - Standards for Spliced I-Girders\DWGS\BRIDGE\SHT-108.dwg (TLegan)

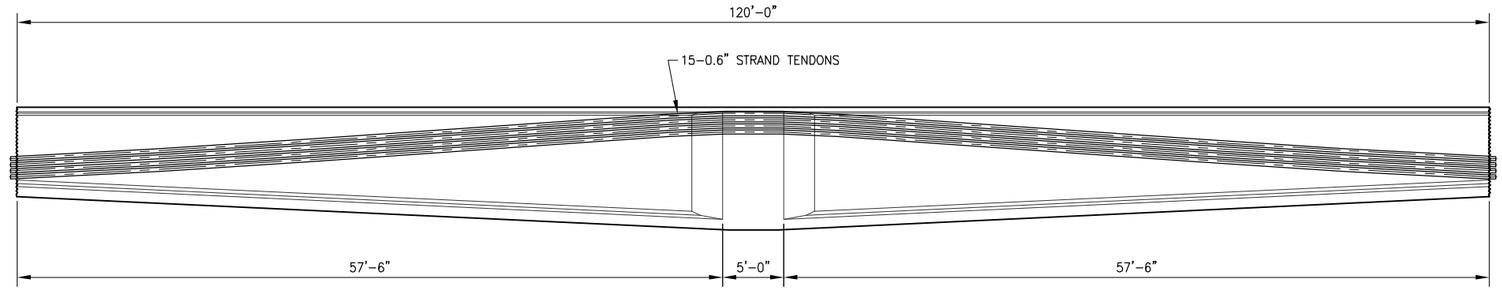

PIER BEAM ELEVATION

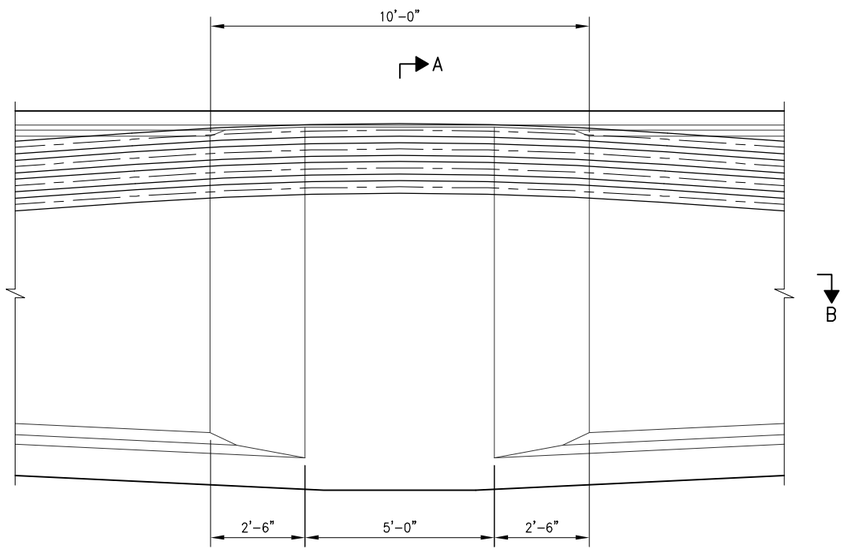

PIER BLOCK DETAIL

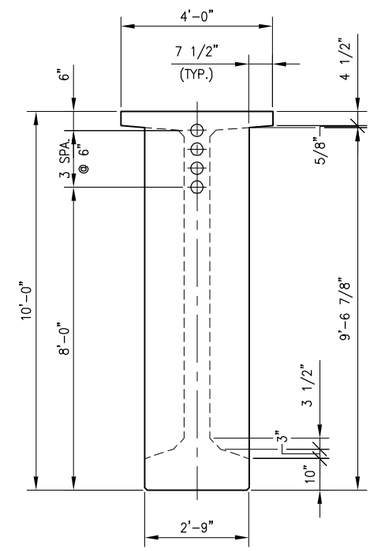

SECTION A

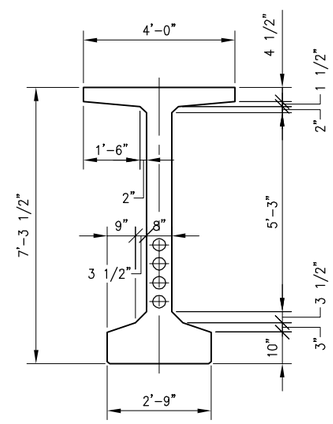

TYPICAL SECTION AT CLOSURE POUR

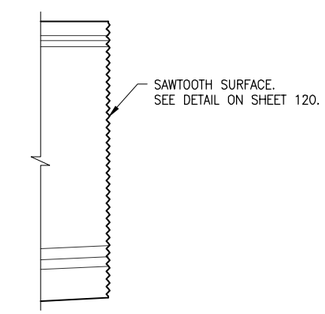

BEAM END AT CLOSURE POUR

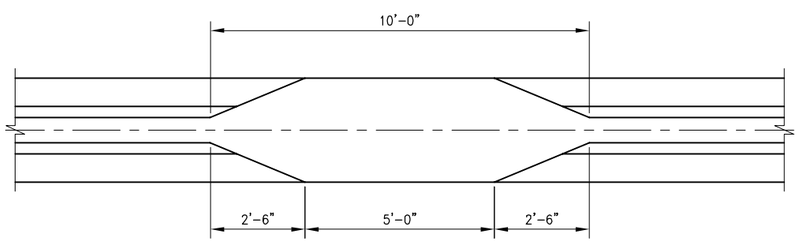

SECTION B

NOTE:
THIS STANDARD WAS DEVELOPED FOR THE PENNDOT GIRDER TYPE 33/87.5. OTHER GIRDER DEPTHS MAY BE INVESTIGATED.

5/1/2013

PENNDOT DRAWING 12-601-BDTD

COMMONWEALTH OF PENNSYLVANIA
REGISTERED PROFESSIONAL
C. BRIAN SLAGLE
ENGINEER
PE075107

CENTRAL ATLANTIC BRIDGE ASSOCIATES (CABA)	JANSSEN & SPAANS ENGINEERING 9120 HARRISON PARK COURT INDIANAPOLIS, INDIANA 46216 Business (317) 254-9696 Fax (317) 258-8282	
COMMONWEALTH OF PENNSYLVANIA DEPARTMENT OF TRANSPORTATION		DATE: 8/11
		SCALE: N/A
SPLICED PRESTRESSED CONCRETE GIRDER STANDARDS		DWN: TAL CK'D: LS
		JOB NO.
– –		SHEET NO. 109

Time: 15:38:56
Date: 3/12/2012
Scale: 1=1(PS)
Drawing File: 996 - Standards For Spliced I-Girders\DWGS\BRIDGE\SHT-109.dwg (TLegan)

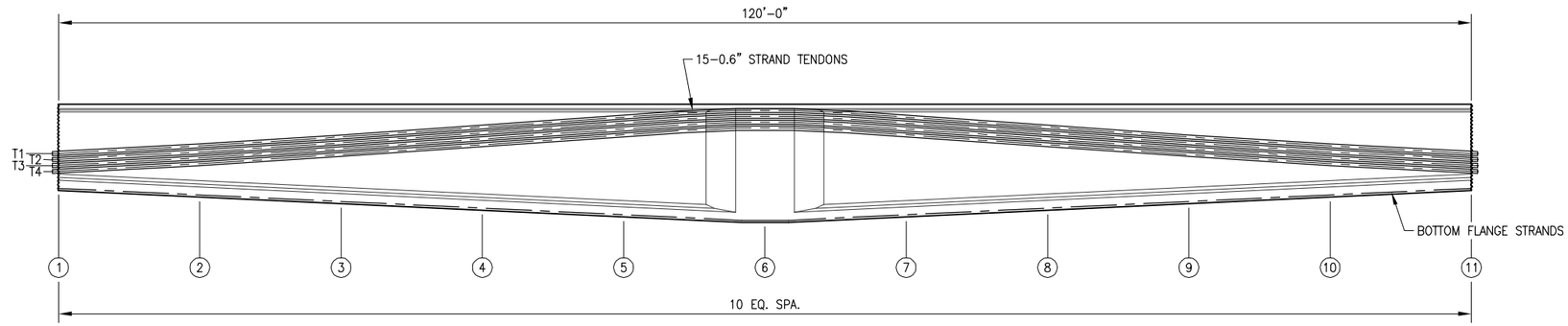

PIER BEAM ELEVATION

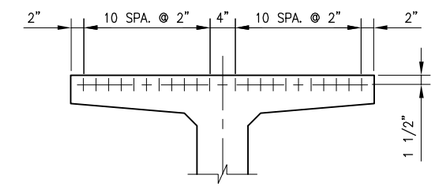

ALLOWABLE FLANGE STRAND LOCATIONS

POST-TENSIONING GEOMETRY – PIER BEAM											
POINT	1	2	3	4	5	6	7	8	9	10	11
DISTANCE FROM END (ft)											
TENDON	TENDON HEIGHT (ft)										
T1											
T2											
T3											
T4											

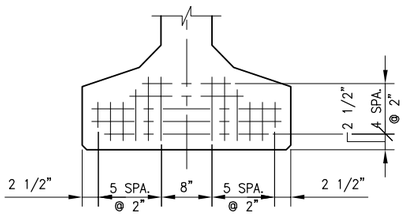

STRAND PATTERN

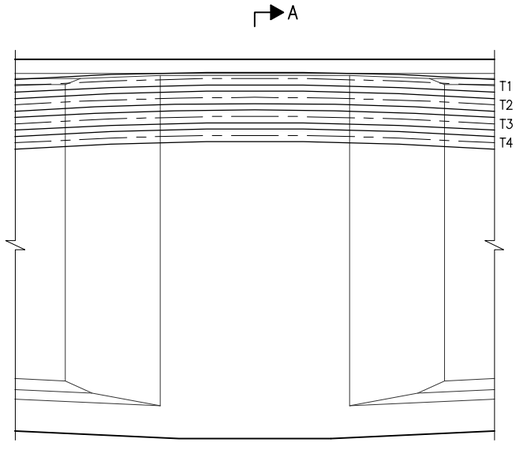

END BLOCK DETAIL

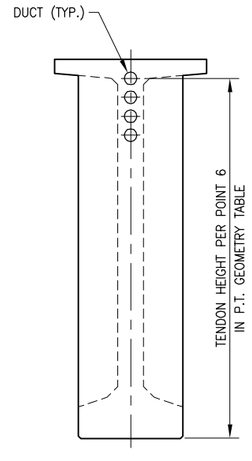

SECTION A

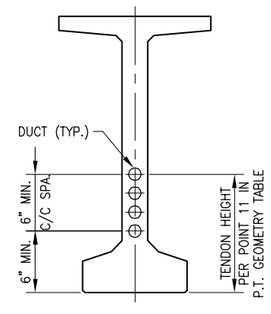

DUCTS @ BEAM END

NOTES:

1. POST-TENSIONING WORK SHALL BE IN ACCORDANCE WITH PENNDOT SPECIFICATIONS, PUBLICATION 408/2011, SECTION 1108-POST-TENSIONING OPERATIONS.
2. TENDON HEIGHTS ARE MEASURED FROM BOTTOM OF FORM TO CENTERLINE OF DUCT.
3. ALL POST-TENSIONING COMPONENTS SHALL BE PENNDOT APPROVED.
4. DUCT COUPLERS SHALL BE POSITIVELY SEALED TO PROHIBIT THE INTRUSION OF CEMENTITIOUS MATERIAL INTO THE DUCTS.
5. ANCHOR CASTING GROUT OUTLET SHALL BE POSITIONED AT HIGH POINT OF INSTALLED CASTING.

PENNDOT DRAWING 12-601-BDTD

5/1/2013

COMMONWEALTH OF PENNSYLVANIA
REGISTERED PROFESSIONAL
C. BRIAN SLAGLE
ENGINEER
PE075107

CENTRAL ATLANTIC BRIDGE ASSOCIATES (CABA)

JANSSEN & SPAANS ENGINEERING
9120 HARRISON PARK COURT
INDIANAPOLIS, INDIANA 46216
Business (317) 254-9696 Fax (317) 258-8262

COMMONWEALTH OF PENNSYLVANIA
DEPARTMENT OF TRANSPORTATION

SPLICED PRESTRESSED
CONCRETE GIRDER STANDARDS

–
–

DATE: 8/11
SCALE: N/A
DWN: TAL CK'D: LS
JOB NO.
SHEET NO.
110

Time: 15:39:16
Date: 3/12/2012
Scale: 1=(FT)
Drawing File: 996 - Standards for Spliced I-Girders\DWGS\BRIDGE\SHT-110.dwg (TL.pgn)

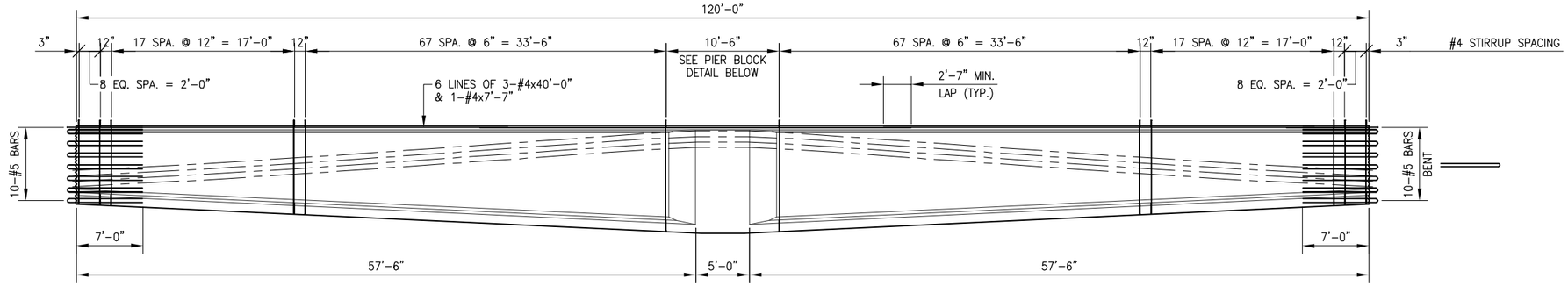

PIER BEAM ELEVATION

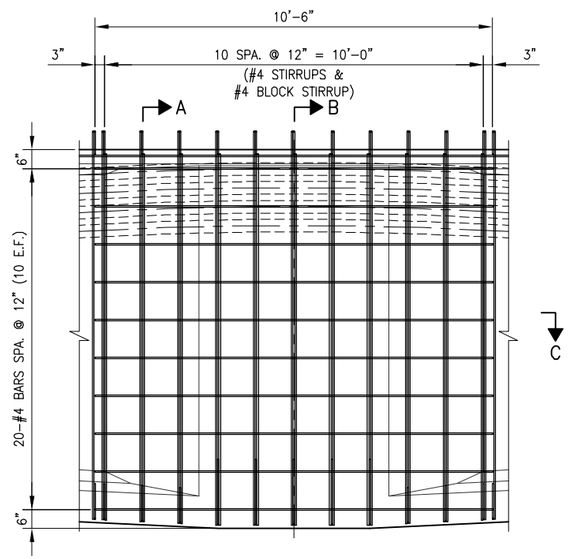

PIER BLOCK DETAIL

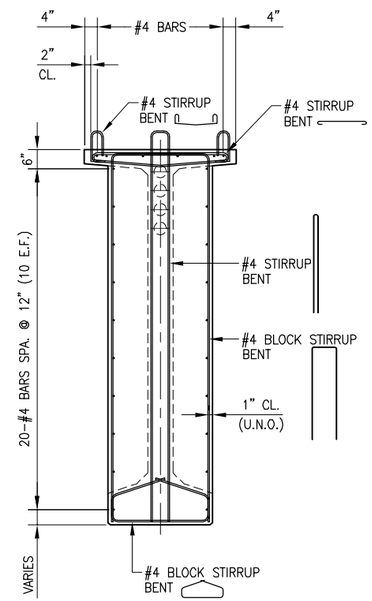

SECTION A

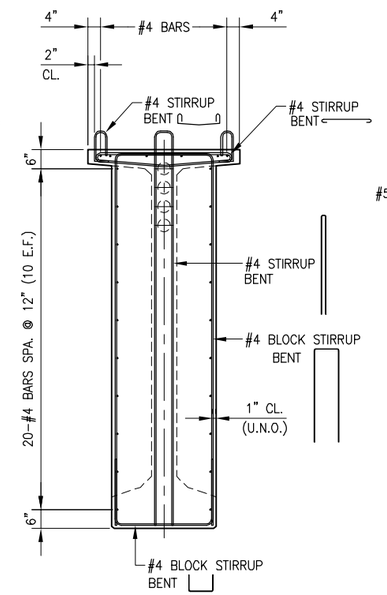

SECTION B

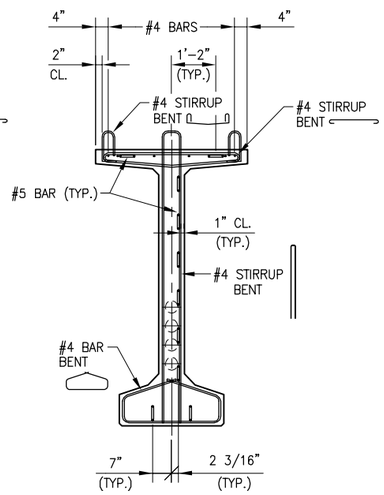

TYPICAL SECTION AT CLOSURE POUR
(LOOKING OUTWARD)

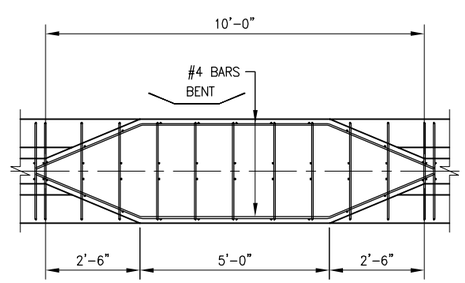

SECTION C

PENNDOT DRAWING 12-601-BDTD

5/1/2013

COMMONWEALTH OF PENNSYLVANIA
REGISTERED PROFESSIONAL
C. BRIAN SLAGLE
ENGINEER
PE075107

CENTRAL ATLANTIC BRIDGE ASSOCIATES (CABA)	JANSSEN & SPAANS ENGINEERING, 9120 HARRISON PARK COURT, INDIANAPOLIS, INDIANA 46216, Business (317) 254-9696 Fax (317) 328-6262
COMMONWEALTH OF PENNSYLVANIA DEPARTMENT OF TRANSPORTATION	DATE: 8/11
	SCALE: N/A
SPLICED PRESTRESSED CONCRETE GIRDER STANDARDS	DWN: TAL CK'D: LS
	JOB NO.
– –	SHEET NO. 111

Time: 15:39:37
Date: 3/12/2012
Scale: 1=1PS
Drawing File: 99s - Standards for Spliced I-Girders\DWGS\BRIDGE\SHT-111.dwg (TLegan)

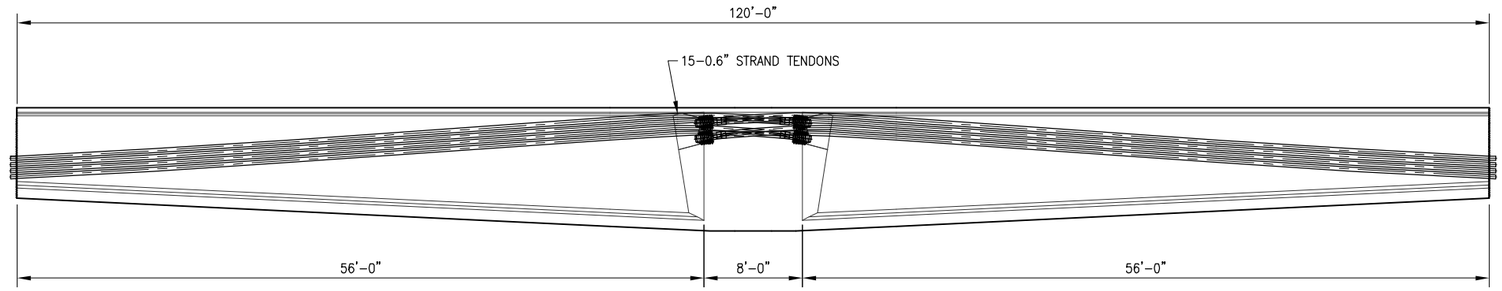

PIER BEAM ELEVATION

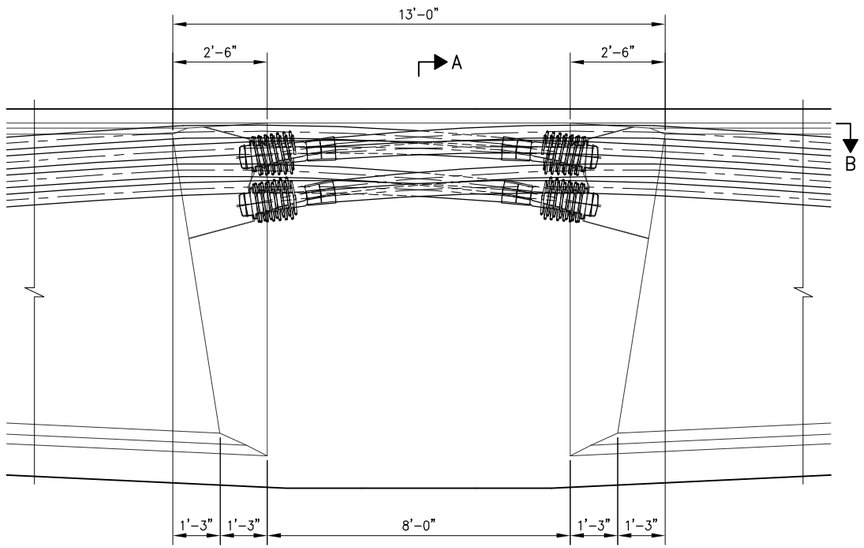

PIER BLOCK DETAIL

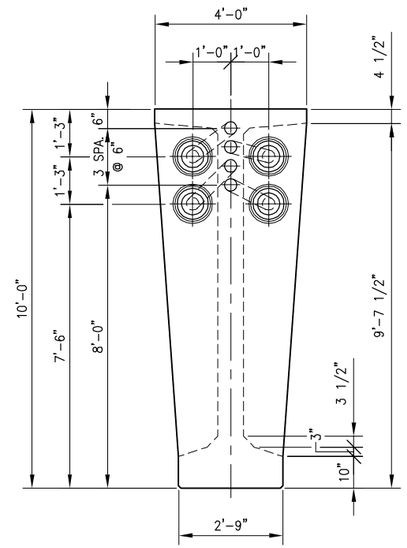

SECTION A

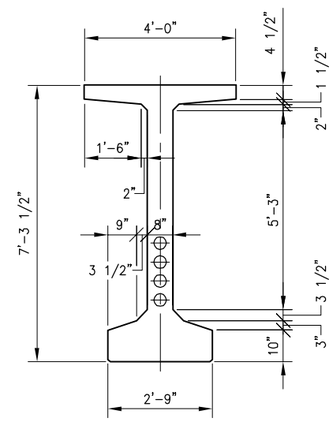

TYPICAL SECTION AT CLOSURE POUR

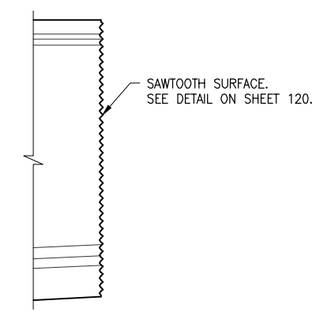

BEAM END AT CLOSURE POUR

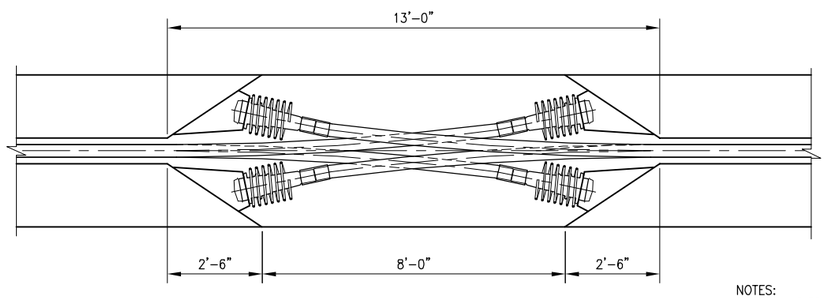

SECTION B

NOTES:
1. THIS PIER BEAM IS TO BE USED WHEN THE TENDON LENGTH EXCEEDS 900'.
2. THIS STANDARD WAS DEVELOPED FOR THE PENNDOT GIRDER TYPE 33/87.5. OTHER GIRDER DEPTHS MAY BE INVESTIGATED.

5/1/2013

PENNDOT DRAWING 12-601-BDTD

COMMONWEALTH OF PENNSYLVANIA
REGISTERED PROFESSIONAL
C. BRIAN SLAGLE
ENGINEER
PE075107

CENTRAL ATLANTIC BRIDGE ASSOCIATES (CABA)	JANSSEN & SPAANS ENGINEERING 9120 HARRISON PARK COURT INDIANAPOLIS, INDIANA 46216 Business (317) 254-9696 Fax (317) 259-6262
COMMONWEALTH OF PENNSYLVANIA DEPARTMENT OF TRANSPORTATION	DATE: 8/11
	SCALE: N/A
SPLICED PRESTRESSED CONCRETE GIRDER STANDARDS	DWN: TAL CK'D: LS
	JOB NO.
– –	SHEET NO. 112

Time: 13:30:50
Date: 9/11/2012
Scale: 1=(PS)
Drawing File: 996 - Standards for Spliced I-Girders\DWGS\BRIDGE\SHT-112.dwg (bsumners)

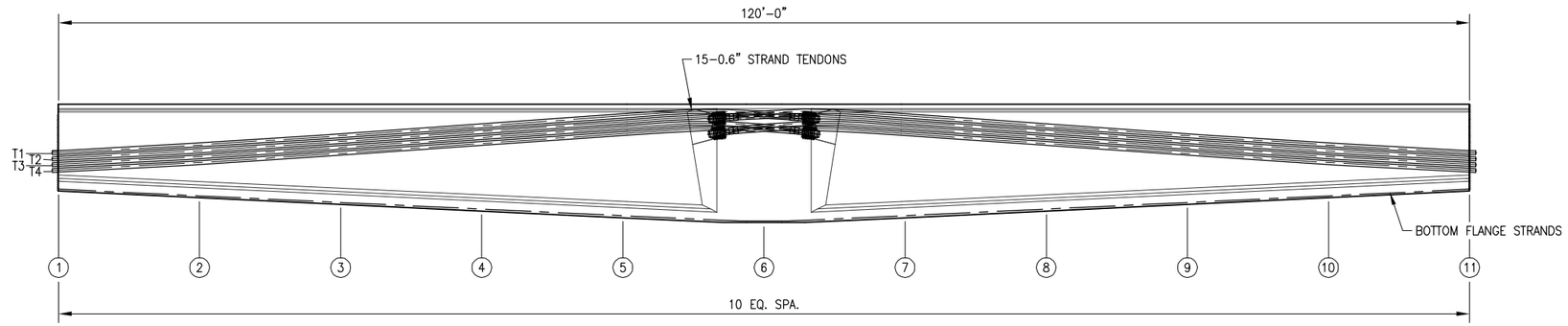

PIER BEAM ELEVATION

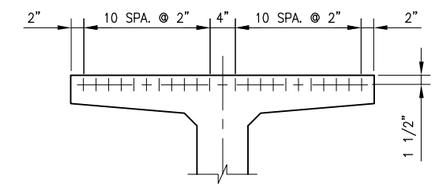

ALLOWABLE FLANGE STRAND LOCATIONS

POST-TENSIONING GEOMETRY – PIER BEAM											
POINT	1	2	3	4	5	6	7	8	9	10	11
DISTANCE FROM END (ft)											
TENDON	TENDON HEIGHT (ft)										
T1											
T2											
T3											
T4											

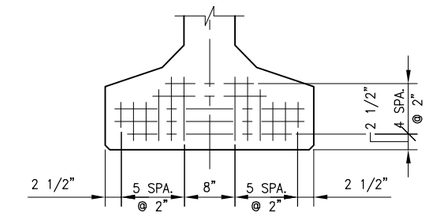

STRAND PATTERN

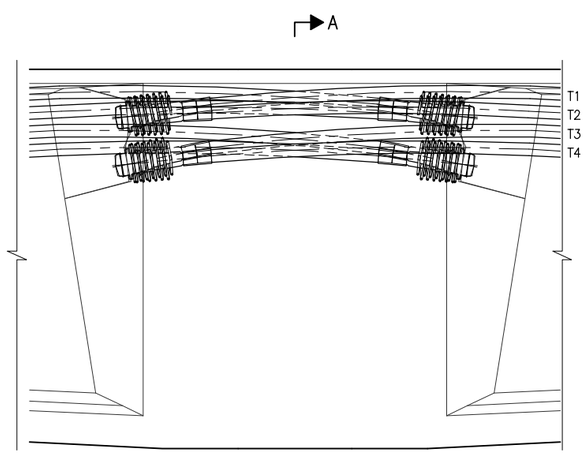

END BLOCK DETAIL

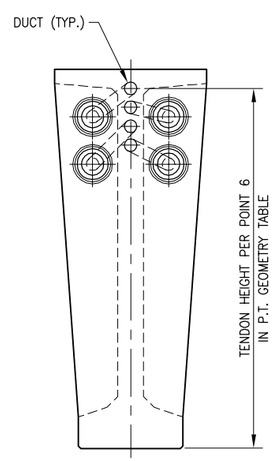

SECTION A

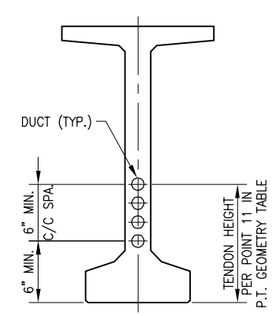

DUCTS @ BEAM END

NOTES:

1. POST-TENSIONING WORK SHALL BE IN ACCORDANCE WITH PENNDOT SPECIFICATIONS, PUBLICATION 408/2011, SECTION 1108-POST-TENSIONING OPERATIONS.
2. TENDON HEIGHTS ARE MEASURED FROM BOTTOM OF FORM TO CENTERLINE OF DUCT.
3. ALL POST-TENSIONING COMPONENTS SHALL BE PENNDOT APPROVED.
4. DUCT COUPLERS SHALL BE POSITIVELY SEALED TO PROHIBIT THE INTRUSION OF CEMENTITIOUS MATERIAL INTO THE DUCTS.
5. ANCHOR CASTING GROUT OUTLET SHALL BE POSITIONED AT HIGH POINT OF INSTALLED CASTING.

NOTE: THIS PIER BEAM IS TO BE USED WHEN THE TENDON LENGTH EXCEEDS 900'.

5/1/2013

PENNDOT DRAWING 12-601-BDTD

COMMONWEALTH OF PENNSYLVANIA
REGISTERED PROFESSIONAL
C. BRIAN SLAGLE
ENGINEER
PE075107

CENTRAL ATLANTIC BRIDGE ASSOCIATES (CABA)

JANSSEN & SPAANS ENGINEERING
9120 HARRISON PARK COURT
INDIANAPOLIS, INDIANA 46216
Business (317) 254-9696 Fax (317) 298-6262

COMMONWEALTH OF PENNSYLVANIA
DEPARTMENT OF TRANSPORTATION

SPLICED PRESTRESSED
CONCRETE GIRDER STANDARDS

–
–

DATE: 8/11
SCALE: N/A
DWN: TAL CK'D: LS
JOB NO.
SHEET NO.
113

Time: 13:30:3
Date: 9/11/2012
Scale: 1=(FT3)
Drawing File: 996 - Standards for Spliced I-Girders\DWGS\BRIDGE\SHT-113.dwg (asumners)

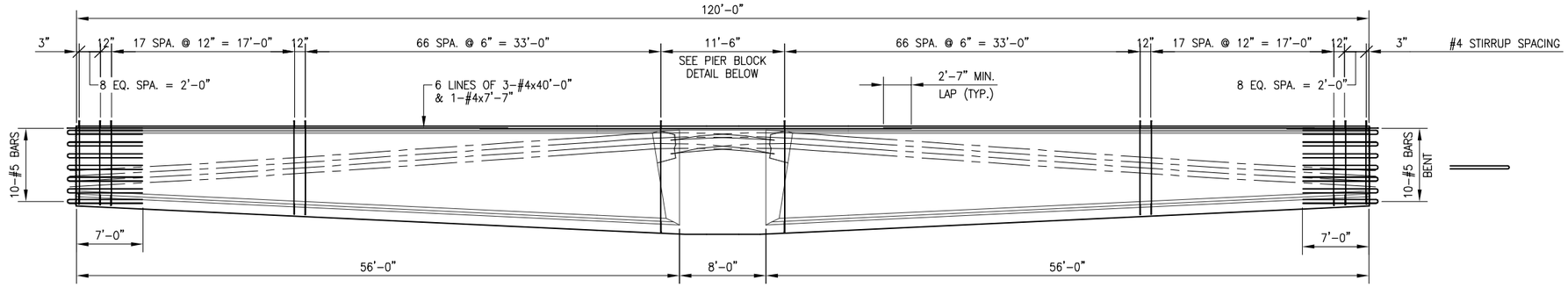

PIER BEAM ELEVATION

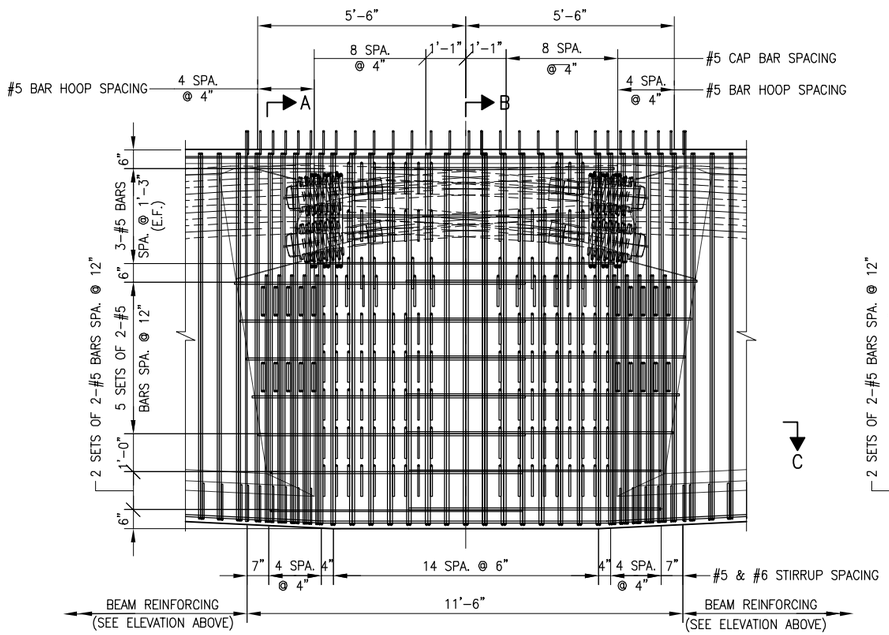

PIER BLOCK DETAIL

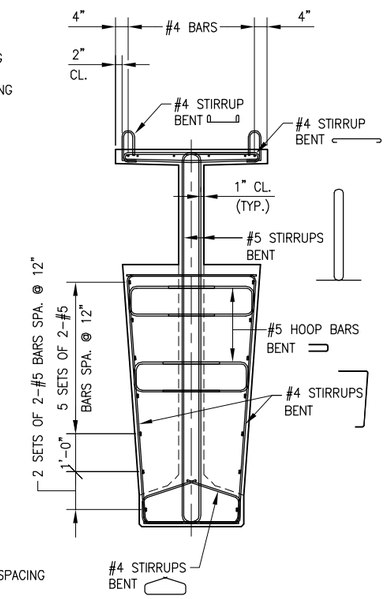

SECTION A

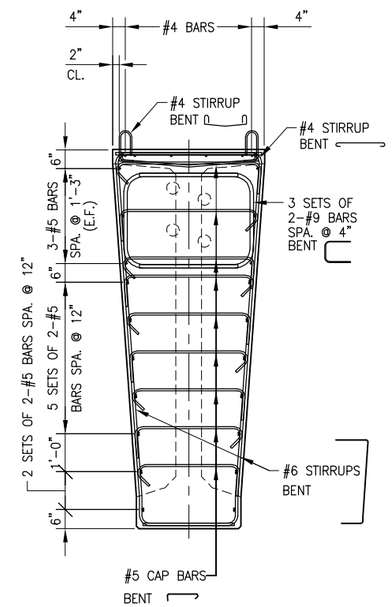

SECTION B

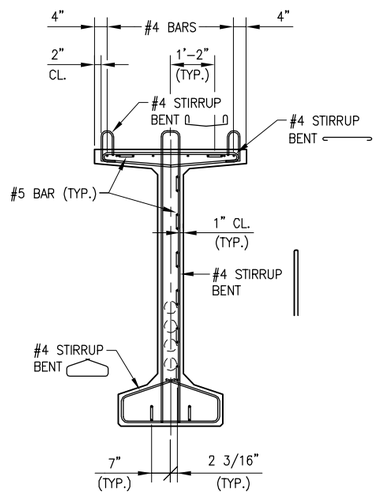

TYPICAL SECTION AT CLOSURE POUR
(LOOKING OUTWARD)

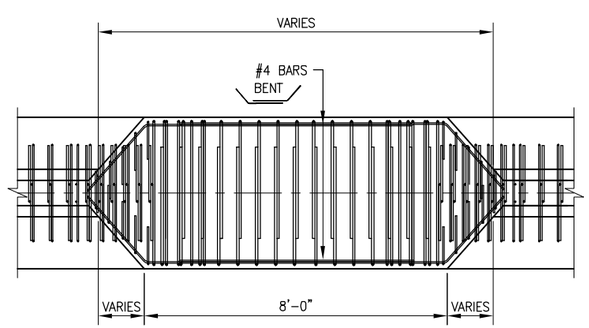

SECTION C

NOTE: THIS PIER BEAM IS TO BE USED WHEN THE TENDON LENGTH EXCEEDS 900'.

5/1/2013

PENNDOT DRAWING 12-601-BDTD

COMMONWEALTH OF PENNSYLVANIA
REGISTERED PROFESSIONAL
C. BRIAN SLAGLE
ENGINEER
PE075107

CENTRAL ATLANTIC BRIDGE ASSOCIATES (CABA)	JANSSEN & SPAANS ENGINEERING, 9120 HARRISON PARK COURT, INDIANAPOLIS, INDIANA 46216, Business (317) 254-9696 Fax (317) 328-6262
COMMONWEALTH OF PENNSYLVANIA DEPARTMENT OF TRANSPORTATION	DATE: 8/11
	SCALE: N/A
SPLICED PRESTRESSED CONCRETE GIRDER STANDARDS	DWN: TAL CK'D: LS
	JOB NO.
– –	SHEET NO. 114

Time: 13:28:09
Date: 9/11/2012
Scale: 1=(FS)
Drawing File: 996 - Standards for Spliced I-Girders\DWGS\BRIDGE\SHT-114.dwg (bsumners)

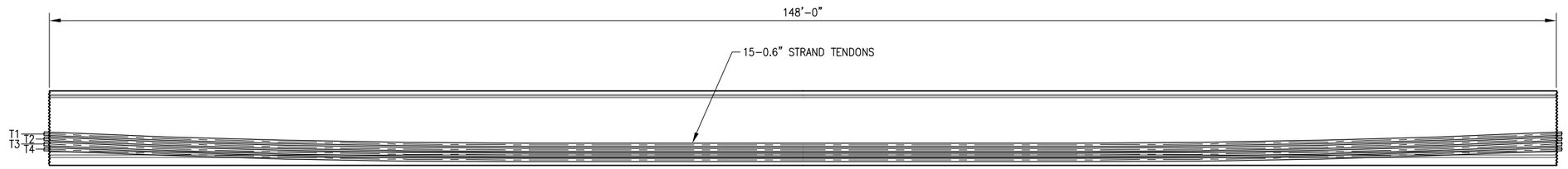

DROP-IN BEAM ELEVATION

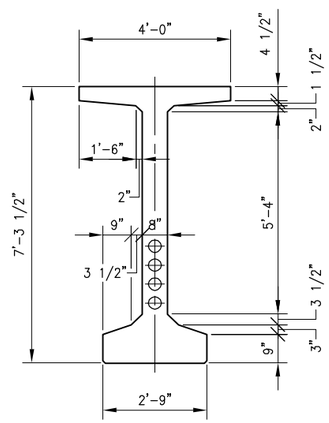

TYPICAL SECTION AT CLOSURE POUR

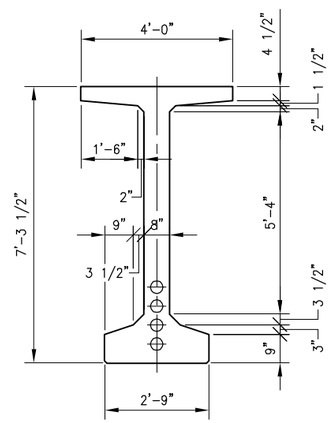

TYPICAL SECTION AT MIDSPAN

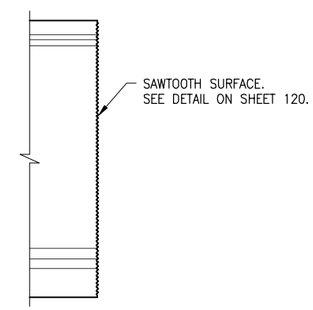

BEAM END AT CLOSURE POUR

NOTE:
THIS STANDARD WAS DEVELOPED FOR THE PENNDOT GIRDER TYPE 33/87.5. OTHER GIRDER DEPTHS MAY BE INVESTIGATED.

5/1/2013

PENNDOT DRAWING 12-601-BDTD

COMMONWEALTH OF PENNSYLVANIA
REGISTERED PROFESSIONAL
C. BRIAN SLAGLE
ENGINEER
PE075107

CENTRAL ATLANTIC BRIDGE ASSOCIATES (CABA)	JANSSEN & SPAANS ENGINEERING 9120 HARRISON PARK COURT INDIANAPOLIS, INDIANA 46216 Business (317) 254-9696 Fax (317) 258-8282	
COMMONWEALTH OF PENNSYLVANIA DEPARTMENT OF TRANSPORTATION	DATE: 8/11	
	SCALE: N/A	
SPLICED PRESTRESSED CONCRETE GIRDER STANDARDS	DWN: TAL	CK'D: LS
	JOB NO.	
– –	SHEET NO. 115	

Time: 15:40:55
Date: 3/12/2012
Scale: 1=1PS%
Drawing File: 996 - Standards For Spliced I-Girders\DWGS\BRIDGE\SHT-115.dwg (TLegan)

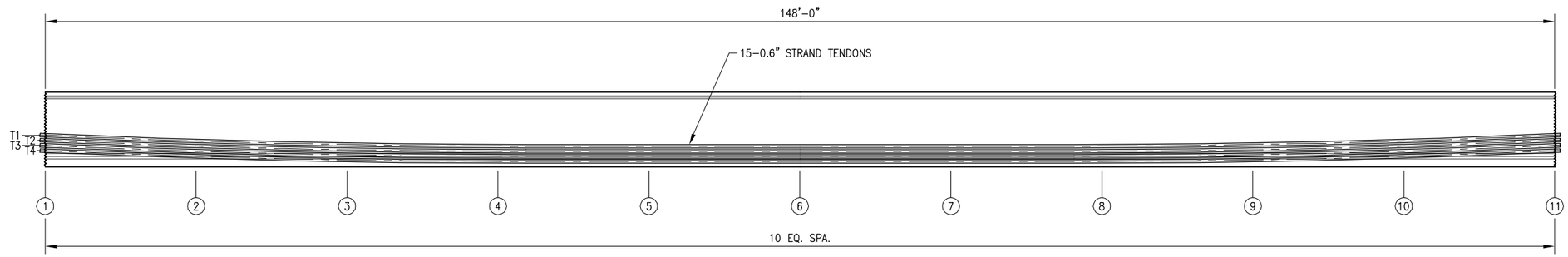

DROP-IN BEAM ELEVATION

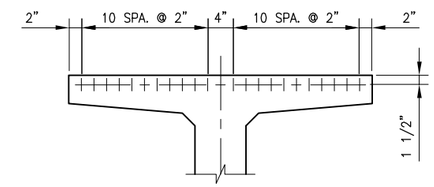

ALLOWABLE FLANGE STRAND LOCATIONS

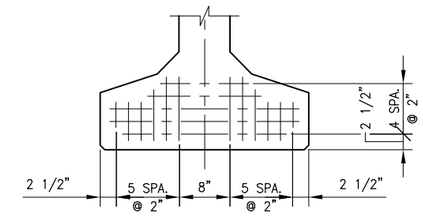

STRAND PATTERN

POST-TENSIONING GEOMETRY - DROP-IN BEAM											
POINT	1	2	3	4	5	6	7	8	9	10	11
DISTANCE FROM END (ft)											
TENDON	TENDON HEIGHT (ft)										
T1											
T2											
T3											
T4											

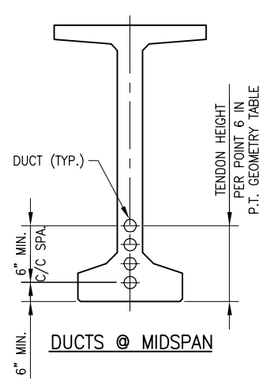

DUCTS @ MIDSPAN

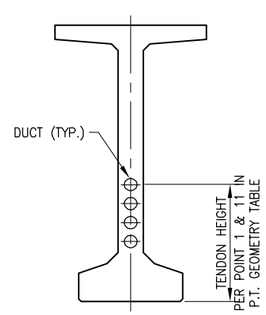

DUCTS @ BEAM END

NOTES:

1. POST-TENSIONING WORK SHALL BE IN ACCORDANCE WITH PENNDOT SPECIFICATIONS, PUBLICATION 408/2011, SECTION 1108-POST-TENSIONING OPERATIONS.
2. TENDON HEIGHTS ARE MEASURED FROM BOTTOM OF FORM TO CENTERLINE OF DUCT.
3. ALL POST-TENSIONING COMPONENTS SHALL BE PENNDOT APPROVED.
4. DUCT COUPLERS SHALL BE POSITIVELY SEALED TO PROHIBIT THE INTRUSION OF CEMENTITIOUS MATERIAL INTO THE DUCTS.
5. ANCHOR CASTING GROUT OUTLET SHALL BE POSITIONED AT HIGH POINT OF INSTALLED CASTING.

PENNDOT DRAWING 12-601-BDTD

5/1/2013

COMMONWEALTH OF PENNSYLVANIA
REGISTERED PROFESSIONAL
C. BRIAN SLAGLE
ENGINEER
PE075107

CENTRAL ATLANTIC BRIDGE ASSOCIATES (CABA)

JANSSEN & SPAANS ENGINEERING
9120 HARRISON PARK COURT
INDIANAPOLIS, INDIANA 46216
Business (317) 254-9696 Fax (317) 298-6262

COMMONWEALTH OF PENNSYLVANIA
DEPARTMENT OF TRANSPORTATION

SPLICED PRESTRESSED
CONCRETE GIRDER STANDARDS

DATE: 8/11
SCALE: N/A
DWN: TAL CK'D: LS
JOB NO.
SHEET NO.
116

Time: 15:41:13
Date: 3/12/2012
Scale: 1=(FS)
Drawing File: 996 - Standards for Spliced I-Girders\DWGS\BRIDGE\SHT-116.dwg (TLegan)

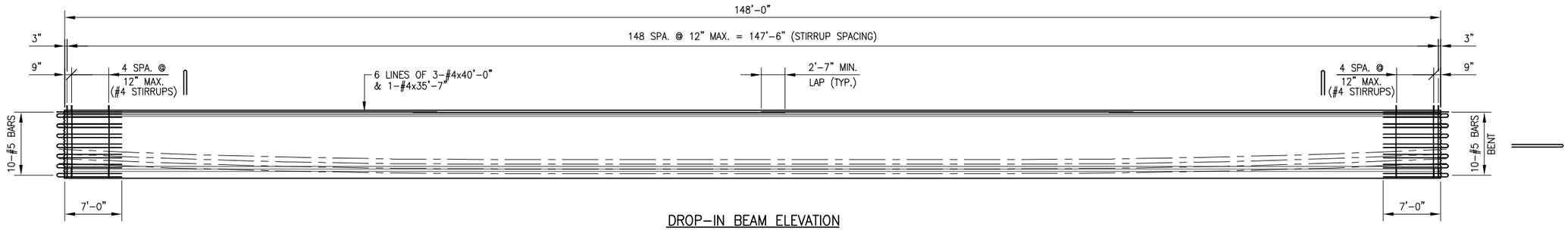

DROP-IN BEAM ELEVATION

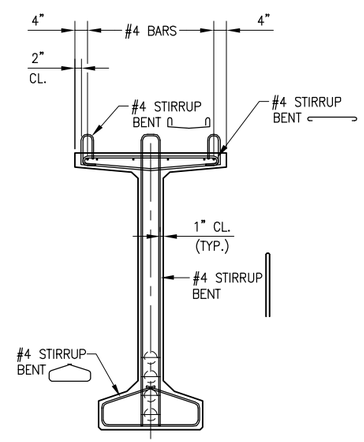

TYPICAL SECTION AT MIDSPAN

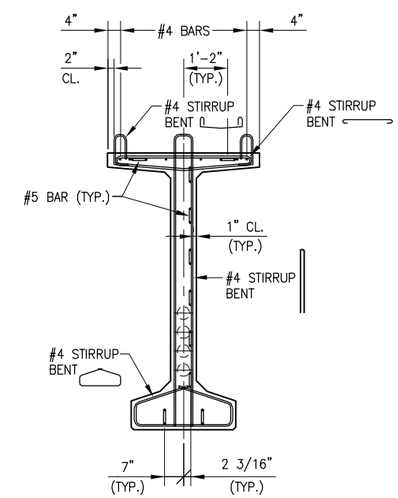

TYPICAL SECTION AT CLOSURE POUR
(LOOKING OUTWARD)

PENNDOT DRAWING 12-601-BDTD

5/1/2013

COMMONWEALTH OF PENNSYLVANIA
REGISTERED PROFESSIONAL
C. BRIAN SLAGLE
ENGINEER
PE075107

CENTRAL ATLANTIC BRIDGE ASSOCIATES (CABA)	JANSSEN & SPAANS ENGINEERING 9120 HARRISON PARK COURT INDIANAPOLIS, INDIANA 46216 Business (317) 254-9696 Fax (317) 258-8262
COMMONWEALTH OF PENNSYLVANIA DEPARTMENT OF TRANSPORTATION	DATE: 8/11
	SCALE: N/A
SPLICED PRESTRESSED CONCRETE GIRDER STANDARDS	DWN: TAL CK'D: LS
	JOB NO.
– –	SHEET NO. 117

Time: 15:41:31
Date: 3/12/2012
Scale: 1=(FS)
Drawing File: 996 - Standards for Spliced I-Girders\DWGS\BRIDGE\SHT-117.dwg (TLegan)

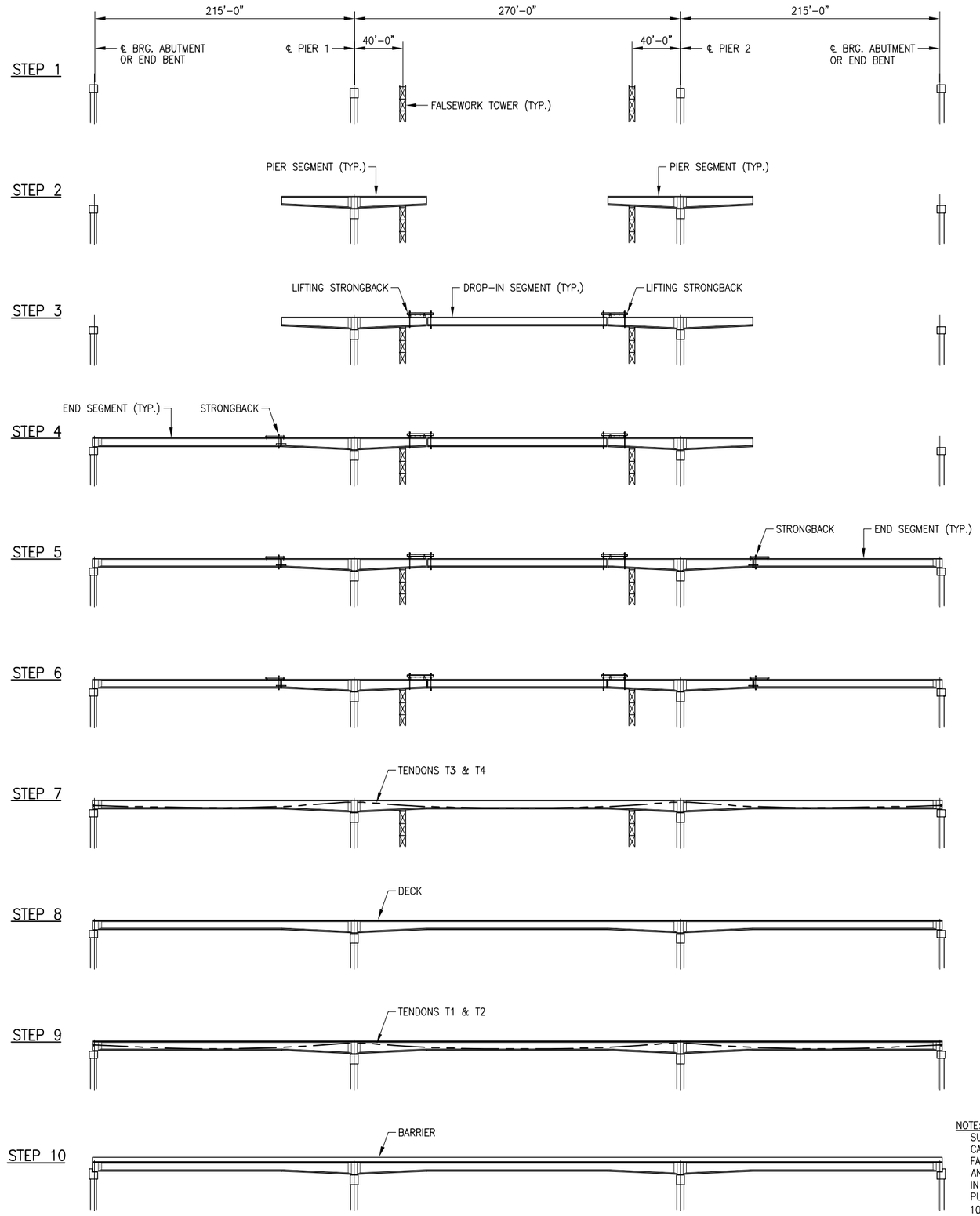

ERECTION SEQUENCE

STEP 1

CONSTRUCT ABUTMENT OR END BENTS AND PIERS. ERECT TEMPORARY SUPPORTS.

STEP 2

ERECT PIER SEGMENTS.
- SECURE FIRST SEGMENT ERECTED TO PIER AND TEMPORARY SUPPORT.
- INSTALL DIAPHRAGMS BETWEEN SEGMENTS AS ADJACENT SEGMENTS ARE ERECTED.
- CHECK ALIGNMENT OF SEGMENTS & SECURE BEARINGS TO SEGMENTS.

STEP 3

ATTACH STEEL LIFTING STRONGBACKS TO ENDS OF PIER SEGMENTS. ERECT DROP-IN SEGMENT. DROP-IN SEGMENTS SHALL BE ERECTED IN PAIRS WITH DIAPHRAGMS INSTALLED BETWEEN PAIRS PRIOR TO LIFTING IF ANALYSIS IS NOT PERFORMED TO CHECK SINGLE SEGMENT ERECTION.
- INSTALL REMAINING DIAPHRAGMS BETWEEN ERECTED PAIRS.
- CUT TOP DEBONDED STRANDS IN DROP-IN SEGMENT.

STEP 4

ATTACH STEEL STRONGBACKS TO END BEAM SEGMENT.
ERECT END BEAM SEGMENT & CONNECT STRONGBACKS TO PIER SEGMENTS.
- INSTALL DIAPHRAGMS BETWEEN SEGMENTS AS ADJACENT SEGMENTS ARE ERECTED.
- CUT TOP DEBONDED STRANDS IN END BEAM SEGMENT.

STEP 5

ATTACH STEEL STRONGBACKS TO END BEAM SEGMENT.
ERECT END BEAM SEGMENT & CONNECT STRONGBACKS TO PIER SEGMENTS.
- INSTALL DIAPHRAGMS BETWEEN SEGMENTS AS ADJACENT SEGMENTS ARE ERECTED.
- CUT TOP DEBONDED STRANDS IN END BEAM SEGMENT.

STEP 6

CAST CLOSURE POURS.

STEP 7

FIRST PHASE POST-TENSIONING
- AFTER CLOSURE POURS HAVE REACHED A MINIMUM STRENGTH OF 5000 PSI,
- STRESS TENDON T3.
- STRESS TENDON T4.

AFTER POST-TENSIONING
- GROUT TENDONS T3 & T4. DO NOT APPLY OR REMOVE LOADS UNTIL GROUT HAS REACHED A MINIMUM STRENGTH OF 2500 PSI.
- DE-STRESS BOTTOM STRANDS IN PIER SEGMENTS.
- REMOVE STRONGBACKS AND TEMPORARY SUPPORTS.
- FILL ANCHORAGE BLOCKOUTS W/ NON-SHRINK GROUT

STEP 8

- CUT TOP DEBONDED STRANDS IN PIER SEGMENTS.
- CAST DECK PER POURING SEQUENCE.

STEP 9

SECOND PHASE POST-TENSIONING
- AFTER DECK HAS REACHED A MINIMUM STRENGTH OF 4000 PSI,
- STRESS TENDON T1.
- STRESS TENDON T2.

AFTER POST-TENSIONING
- GROUT TENDON T1 & T2. DO NOT APPLY OR REMOVE LOADS UNTIL GROUT HAS REACHED A MINIMUM STRENGTH OF 2500 PSI.

STEP 10

CONSTRUCT END BENT END WALLS. INSTALL STEEL FINGER EXPANSION EXPANSION JOINT. CAST CONCRETE BARRIERS.

PENNDOT DRAWING 12-601-BDTD

5/1/2013

NOTE:
SUBMIT DRAWING AND CALCULATIONS FOR FALSEWORK, STRONGBACKS AND LIFTING STRONGBACKS IN ACCORDANCE WITH PUBLICATION 408, SECTION 105.03(c)

COMMONWEALTH OF PENNSYLVANIA
REGISTERED PROFESSIONAL
C. BRIAN SLAGLE
ENGINEER
PE075107

CENTRAL ATLANTIC BRIDGE ASSOCIATES (CABA)	JANSSEN & SPAANS ENGINEERING 9120 HARRISON PARK COURT INDIANAPOLIS, INDIANA 46216 Business (317) 254-9696 Fax (317) 258-8262
COMMONWEALTH OF PENNSYLVANIA DEPARTMENT OF TRANSPORTATION	DATE: 8/11
	SCALE: N/A
SPLICED PRESTRESSED CONCRETE GIRDER STANDARDS	DWN: TAL CK'D: LS
	JOB NO.
ERECTION SCHEME ALTERNATE 1	SHEET NO. 118

Time: 15:41:48
Date: 3/12/2012
Scale: 1:4(FS)
Drawing File: 996 - Standards for Spliced I-Girders\DWGS\BRIDGE\SHT-118.dwg (TLegan)

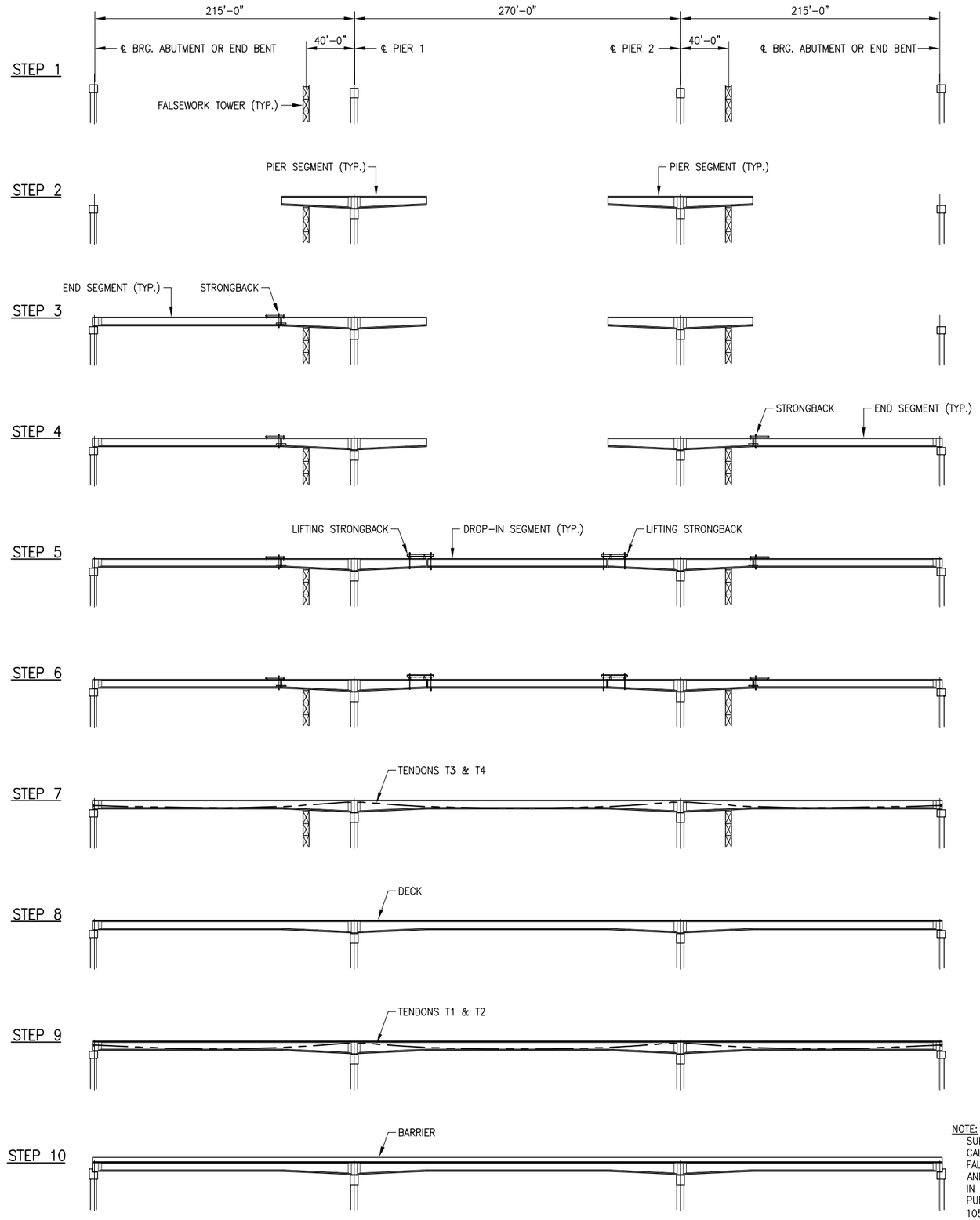

ERECTION SEQUENCE

STEP 1

CONSTRUCT ABUTMENT OR END BENTS AND PIERS. ERECT TEMPORARY SUPPORTS.

STEP 2

ERECT PIER SEGMENTS.
- SECURE FIRST SEGMENT ERECTED TO PIER AND TEMPORARY SUPPORT.
- INSTALL DIAPHRAGMS BETWEEN SEGMENTS AS ADJACENT SEGMENTS ARE ERECTED.
- CHECK ALIGNMENT OF SEGMENTS & SECURE BEARINGS TO SEGMENTS.

STEP 3

ATTACH STEEL STRONGBACKS TO END BEAM SEGMENT.
ERECT END BEAM SEGMENT & CONNECT STRONGBACKS TO PIER SEGMENTS.
- INSTALL DIAPHRAGMS BETWEEN SEGMENTS AS ADJACENT SEGMENTS ARE ERECTED.
- CUT TOP DEBONDED STRANDS IN END BEAM SEGMENT.

STEP 4

ATTACH STEEL STRONGBACKS TO END BEAM SEGMENT.
ERECT END BEAM SEGMENT & CONNECT STRONGBACKS TO PIER SEGMENTS.
- INSTALL DIAPHRAGMS BETWEEN SEGMENTS AS ADJACENT SEGMENTS ARE ERECTED.
- CUT TOP DEBONDED STRANDS IN END BEAM SEGMENT.

STEP 5

ATTACH STEEL LIFTING STRONGBACKS TO ENDS OF PIER SEGMENTS. ERECT DROP-IN SEGMENT. DROP-IN SEGMENTS SHALL BE ERECTED IN PAIRS WITH DIAPHRAGMS INSTALLED BETWEEN PAIRS PRIOR TO LIFTING IF ANALYSIS IS NOT PERFORMED TO CHECK SINGLE SEGMENT ERECTION.
- INSTALL REMAINING DIAPHRAGMS BETWEEN ERECTED PAIRS.
- CUT TOP DEBONDED STRANDS IN DROP-IN SEGMENT.

STEP 6

CAST CLOSURE POURS.

STEP 7

FIRST PHASE POST-TENSIONING
- AFTER CLOSURE POURS HAVE REACHED A MINIMUM STRENGTH OF 5000 PSI,
- STRESS TENDON T3.
- STRESS TENDON T4.

AFTER POST-TENSIONING
- GROUT TENDONS T3 & T4. DO NOT APPLY OR REMOVE LOADS UNTIL GROUT HAS REACHED A MINIMUM STRENGTH OF 2500 PSI.
- DE-STRESS BOTTOM STRANDS IN PIER SEGMENTS.
- REMOVE STRONGBACKS AND TEMPORARY SUPPORTS.
- FILL ANCHORAGE BLOCKOUTS W/ NON-SHRINK GROUT

STEP 8

- CUT TOP DEBONDED STRANDS IN PIER SEGMENTS.
- CAST DECK PER POURING SEQUENCE.

STEP 9

SECOND PHASE POST-TENSIONING
- AFTER DECK HAS REACHED A MINIMUM STRENGTH OF 4000 PSI, STRESS TENDON T1 & T2.

AFTER POST-TENSIONING
- GROUT TENDON T1 & T2. DO NOT APPLY OR REMOVE LOADS UNTIL GROUT HAS REACHED A MINIMUM STRENGTH OF 2500 PSI.

STEP 10

CONSTRUCT END BENT END WALLS. INSTALL STEEL FINGER EXPANSION EXPANSION JOINT. CAST CONCRETE BARRIERS.

PENNDOT DRAWING 12-601-BDTD

5/1/2013

NOTE:
SUBMIT DRAWING AND CALCULATIONS FOR FALSEWORK, STRONGBACKS AND LIFTING STRONGBACKS IN ACCORDANCE WITH PUBLICATION 408, SECTION 105.03(c)

COMMONWEALTH OF PENNSYLVANIA
REGISTERED PROFESSIONAL
C. BRIAN SLAGLE
ENGINEER
PE075107

CENTRAL ATLANTIC BRIDGE ASSOCIATES (CABA)	JANSSEN & SPAANS ENGINEERING 9120 HARRISON PARK COURT INDIANAPOLIS, INDIANA 46216 Business (317) 254-9666 Fax (317) 328-6262	
COMMONWEALTH OF PENNSYLVANIA DEPARTMENT OF TRANSPORTATION	DATE: 8/11	
	SCALE: N/A	
SPLICED PRESTRESSED CONCRETE GIRDER STANDARDS	DWN: TAL	CK'D: LS
	JOB NO.	
ERECTION SCHEME ALTERNATE 2	SHEET NO. 119	

Time: 15:42:6
Date: 3/12/2012
Scale: 1=(FS)
Drawing File: 996 - Standards for Spliced I-Girders\DWGS\BRIDGE\SHT-119.dwg (TLegan)

LEGEND	
⦶	GROUT INLET
⊗	GROUT INLET/DRAIN

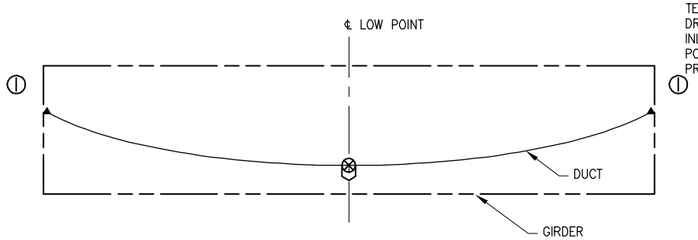

GROUT VENT PLACEMENT DIAGRAM
(END BEAM & DROP-IN BEAM)

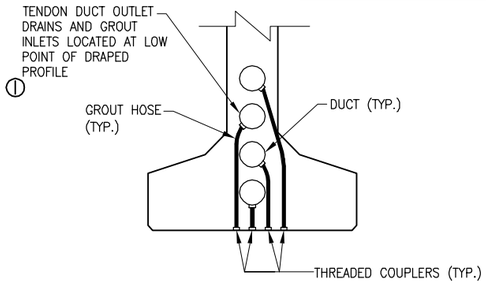

GROUT VENT PLACEMENT DIAGRAM
(END BEAM & DROP-IN BEAM)

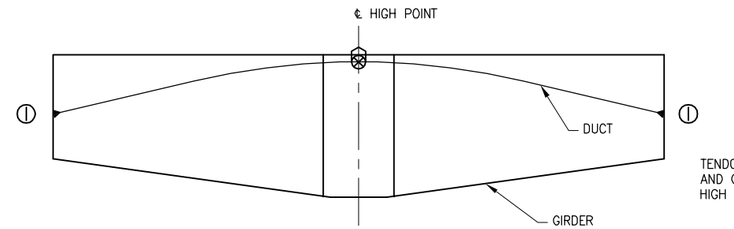

GROUT VENT PLACEMENT DIAGRAM
(PIER BEAM)

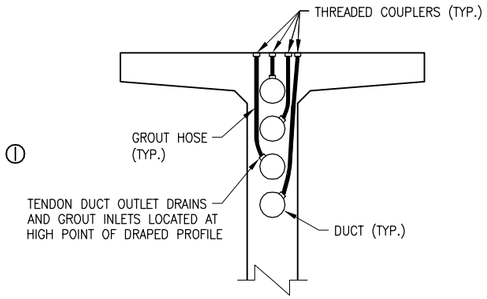

GROUT VENT PLACEMENT DIAGRAM
(END BEAM & DROP-IN BEAM)

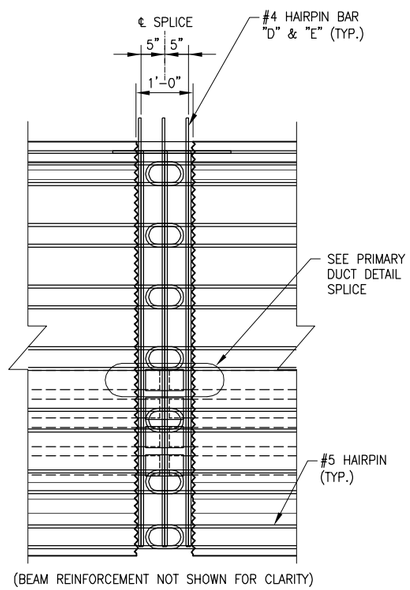

DUCT SPLICE @ CLOSURE POUR

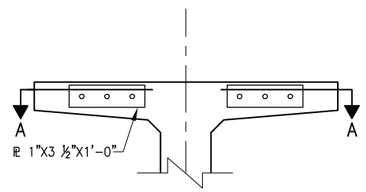

TEMPORARY TOP OF STRANDS

HOLE DIAMETER AS REQUIRED BASED ON DIAMETER OF PLASTIC DUCT AND STRAND ANCHOR HEAD. SEAL PLASTIC DUCT TO ANCHOR PLATE AND COUNTER SINK HOLE AS REQUIRED FOR ANCHOR HEAD.

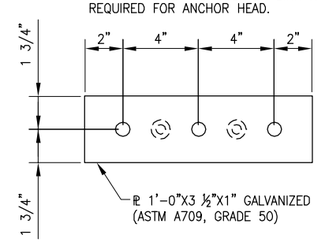

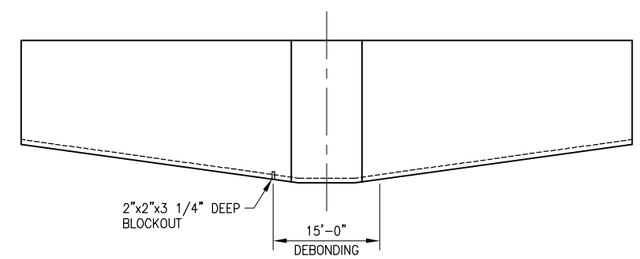

BOTTOM STRAND DESTRESSING DETAIL
(ELEVATION)

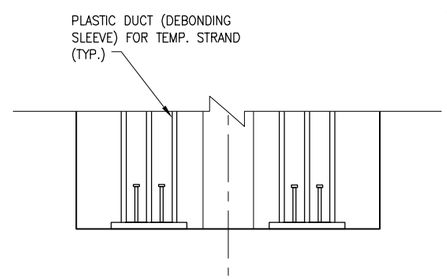

SECTION A–A

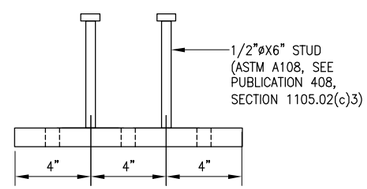

PLATE DETAIL

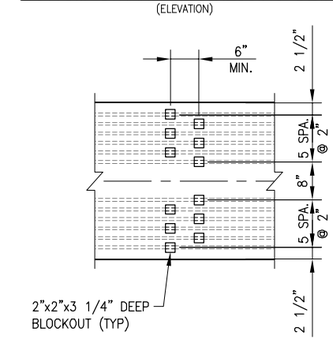

BOTTOM STRAND DESTRESSING DETAIL
(DESTRESS STRANDS PRIOR TO DECK POUR)
(PLAN)

NOTE:
TEMPORARY TOP STRANDS SHALL NOT BE REMOVED UNTIL GIRDER HAS BEEN SET IN ITS FINAL LOCATION IN THE BRIDGE AND HAS BEEN ADEQUATELY BRACED. CHUCKS FOR TEMPORARY STRANDS MAY BE REMOVED USING AN ACETYLENE TORCH, EXERCISING EXTREME SAFETY PRECAUTIONS. AFTER DETENSIONING TOP TEMPORARY STRANDS, DUCTS SHALL BE SEALED AT EACH END WITH APPROVED CAULKING. USE A CAULK LISTED IN BULLETIN 15, SECTION 705.8(b).

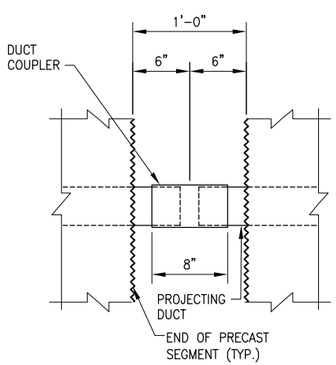

DUCT SPLICE DETAIL

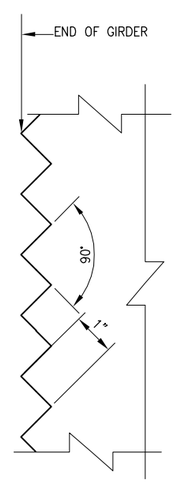

SAWTOOTH DETAIL

5/1/2013

PENNDOT DRAWING 12–601–BDTD

COMMONWEALTH OF PENNSYLVANIA
REGISTERED PROFESSIONAL
C. BRIAN SLAGLE
ENGINEER
PE075107

CENTRAL ATLANTIC BRIDGE ASSOCIATES (CABA)

JANSSEN & SPAANS ENGINEERING
9120 HARRISON PARK COURT
INDIANAPOLIS, INDIANA 46216
Business (317) 254-9696 Fax (317) 258-8262

COMMONWEALTH OF PENNSYLVANIA
DEPARTMENT OF TRANSPORTATION

SPLICED PRESTRESSED
CONCRETE GIRDER STANDARDS

–
–

DATE: 8/11
SCALE: N/A
DWN: BTS CK'D: LS
JOB NO.
SHEET NO.
120

Time: 15:41:13
Date: 3/12/2012
Scale: 1:1(PS)
Drawing File: 996 - Standards for Spliced I-Girders\DWGS\BRIDGE\SHT-116.dwg (TLegan)

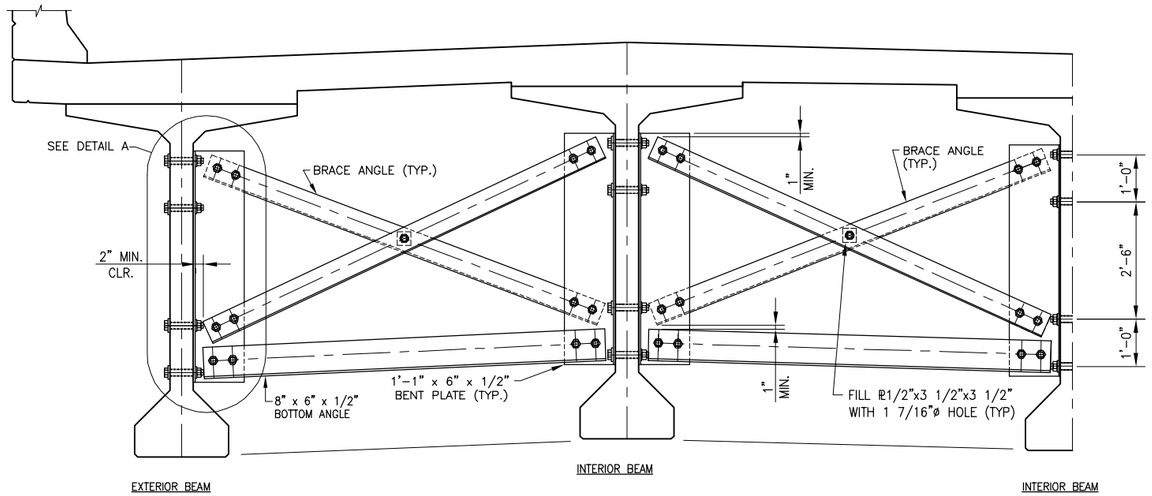

PIER DIAPHRAGM DETAILS

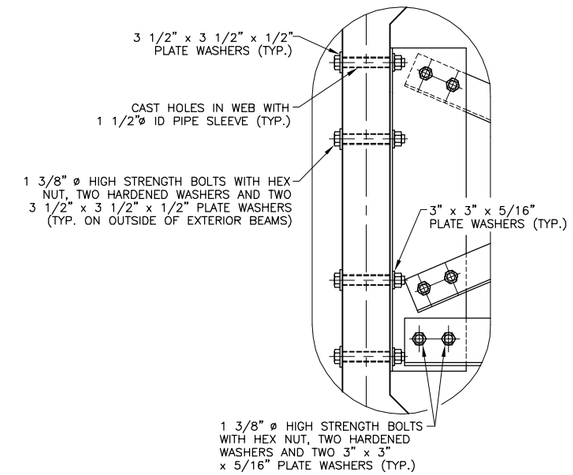

DETAIL A

NOTES:

1. ALL STRUCTURAL STEEL, INCLUDING BOLTS, NUTS AND WASHERS SHALL MEET THE FABRICATION AND ERECTION REQUIREMENTS SPECIFIED IN THE PENNDOT PUBLICATION 408.
2. ALL STRUCTURAL STEEL SHALL BE ASTM A709, GRADE 50, GALVANIZED ACCORDING TO THE PENNDOT PUBLICATION 408.
3. BOLTS ARE TO BE ASTM A325, TYPE 1. ALL BOLTS, NUTS AND WASHERS SHALL BE GALVANIZED ACCORDING TO THE PENNDOT PUBLICATION 408.
4. BEAM FABRICATION SHALL NOT COMMENCE PRIOR TO THE APPROVAL OF STRUCTURAL STEEL DIAPHRAGM SHOP DRAWINGS.
5. DIAPHRAGMS SHALL BE SLOPED ACCORDING TO THE ELEVATION OF THE GIRDERS.
6. ALL CONNECTIONS ARE TO BE SLIP CRITICAL WITH A CLASS 'A' SURFACE.

PENNDOT DRAWING 12-601-BDTD

5/1/2013

COMMONWEALTH OF PENNSYLVANIA
REGISTERED PROFESSIONAL
C. BRIAN SLAGLE
ENGINEER
PE075107

CENTRAL ATLANTIC BRIDGE ASSOCIATES (CABA)	JANSSEN & SPAANS ENGINEERING, 9120 HARRISON PARK COURT, INDIANAPOLIS, INDIANA 46216, Business (317) 254-9696 Fax (317) 258-8282
COMMONWEALTH OF PENNSYLVANIA DEPARTMENT OF TRANSPORTATION	DATE: 8/11
	SCALE: N/A
SPLICED PRESTRESSED CONCRETE GIRDER STANDARDS	DWN: BTS CK'D: LS
	JOB NO.
– –	SHEET NO. 121

Time: 15:41:13
Date: 3/12/2012
Scale: 1=1PS3
Drawing File: 996 - Standards for Spliced I-Girders\DWGS\BRIDGE\SHT-116.dwg (TLegan)

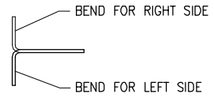

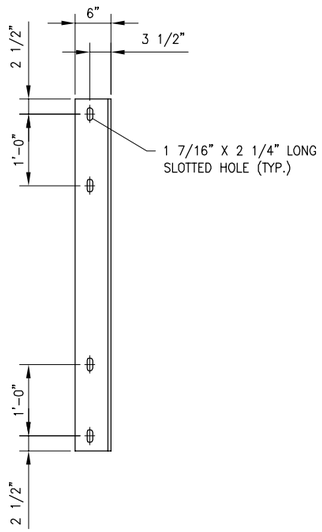

BEAM FACE

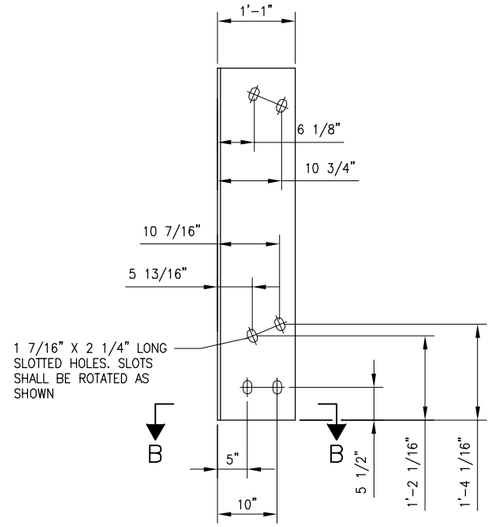

DIAPHRAGM FACE

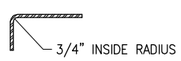

SECTION B–B

DIAPHRAGM SUPPORT DETAILS

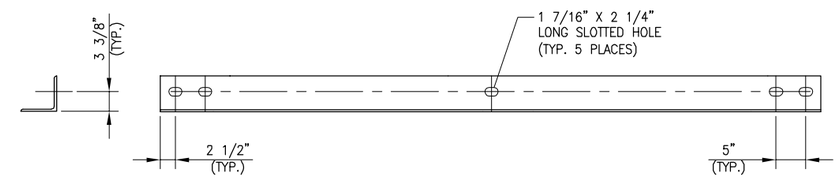

BRACE ANGLE
L 6" X 6" X 3/8"

NOTES:
1. REFER TO SHEET 121 FOR ADDITIONAL DETAILS.
2. ALL STRUCTURAL STEEL, INCLUDING BOLTS, NUTS AND WASHERS SHALL MEET THE FABRICATION AND ERECTION REQUIREMENTS SPECIFIED IN THE PENNDOT PUBLICATION 408.
3. ALL STRUCTURAL STEEL SHALL BE ASTM A709, GRADE 50, GALVANIZED ACCORDING TO THE PENNDOT PUBLICATION 408.
4. BOLTS ARE TO BE ASTM A325, TYPE 1. ALL BOLTS, NUTS AND WASHERS SHALL BE GALVANIZED ACCORDING TO THE PENNDOT PUBLICATION 408.
5. BEAM FABRICATION SHALL NOT COMMENCE PRIOR TO THE APPROVAL OF STRUCTURAL STEEL DIAPHRAGM SHOP DRAWINGS.
6. DIAPHRAGMS SHALL BE SLOPED ACCORDING TO THE ELEVATION OF THE GIRDERS.
7. ALL CONNECTIONS ARE TO BE SLIP CRITICAL WITH A CLASS 'A' SURFACE.

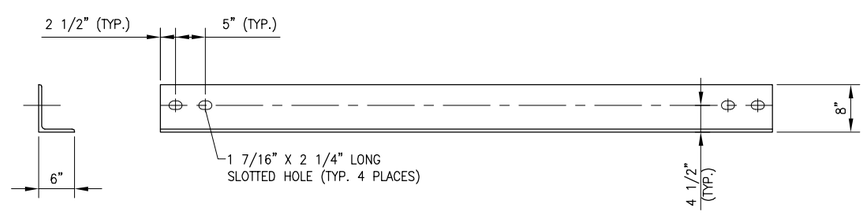

8" X 6" X 1/2" BOTTOM ANGLE

PENNDOT DRAWING 12–601–BDTD

5/1/2013

COMMONWEALTH OF PENNSYLVANIA
REGISTERED PROFESSIONAL
C. BRIAN SLAGLE
ENGINEER
PE075107

CENTRAL ATLANTIC BRIDGE ASSOCIATES (CABA)	JANSSEN & SPAANS ENGINEERING 9120 HARRISON PARK COURT INDIANAPOLIS, INDIANA 46216 Business (317) 254-9696 Fax (317) 259-8382
COMMONWEALTH OF PENNSYLVANIA DEPARTMENT OF TRANSPORTATION	DATE: 8/11
	SCALE: N/A
SPLICED PRESTRESSED CONCRETE GIRDER STANDARDS	DWN: BTS CK'D: LS
	JOB NO.
– –	SHEET NO. 122

Time: 7:33:39
Date: 8/16/2012
Scale: 1=1PS
Drawing File: 996 - Standards for Spliced I-Girders\DWGS\BRIDGE\SHT-122.dwg (documents)

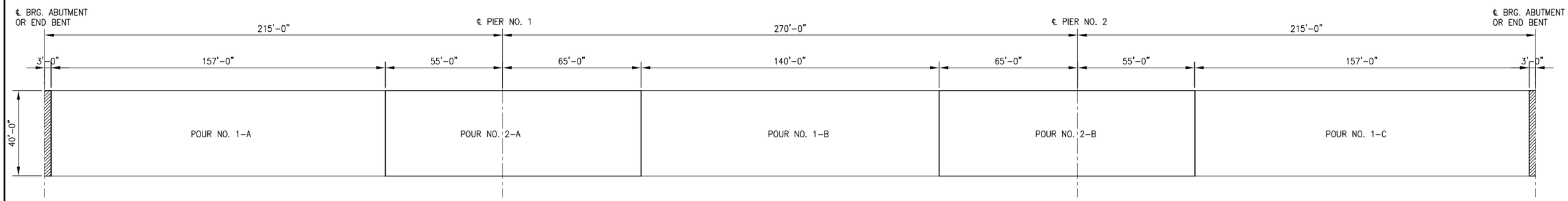

DECK POUR SEQUENCE

POUR THIS PORTION OF DECK AFTER 2ND PHASE OF POST-TENSIONING

NOTES:

1. THE CONCRETE DECK OF EACH UNIT SHALL BE PLACED IN THE SEQUENCE SHOWN ABOVE.
2. PRIOR TO A SUBSEQUENT DECK POUR, THE FOLLOWING CRITERIA SHALL BE MET:
   - A.) A MINIMUM OF THREE DAYS CURE SHALL HAVE ELAPSED FROM THE ADJACENT POUR.
   - B.) THE PREVIOUS POUR MUST ATTAIN A MODULUS OF RUPTURE OF 650 PSI OR A MINIMUM COMPRESSION STRENGTH OF 3500 PSI AS EXHIBITED BY THE TESTING CYLINDERS WHICH HAVE BEEN CURED AND STORED ALONGSIDE IN A SIMILAR MANNER TO THE CORRESPONDING POUR.
3. THE POURING SEQUENCE SHALL NOT BE CHANGED WITHOUT THE APPROVAL OF THE ENGINEER.

PENNDOT DRAWING 12-601-BDTD

5/1/2013

COMMONWEALTH OF PENNSYLVANIA
REGISTERED PROFESSIONAL
C. BRIAN SLAGLE
ENGINEER
PE075107

CENTRAL ATLANTIC BRIDGE ASSOCIATES (CABA)	JANSSEN & SPAANS ENGINEERING, 9120 HARRISON PARK COURT, INDIANAPOLIS, INDIANA 46216, Business (317) 254-9696 Fax (317) 258-8262
COMMONWEALTH OF PENNSYLVANIA DEPARTMENT OF TRANSPORTATION	DATE: 8/11
	SCALE: N/A
SPLICED PRESTRESSED CONCRETE GIRDER STANDARDS	DWN: BTS CK'D: LS
	JOB NO.
– –	SHEET NO. 123

Time: 15:41:31
Date: 3/12/2012
Scale: 1=1(PS)
Drawing File: 996 - Standards For Spliced I-Girders\DWGS\BRIDGE\SNT-117.dwg (TLegan)

GROUT SPECIFICATIONS

DESCRIPTION – THIS WORK IS GROUTING OF STEEL POST–TENSIONING TENDONS IN CONCRETE STRUCTURES. THIS SPECIFICATION APPLIES TO ALL GROUTED POST–TENSIONING OPERATIONS IN BRIDGE SUPERSTRUCTURE AND SUBSTRUCTURE, INCLUDING BOX–GIRDERS, I–GIRDERS, SEGMENTAL GIRDERS, SPLICED GIRDERS, PIER CAPS, AND PIERS.

FOR GROUTING, ONLY PREPACKAGED GROUTS USED WITHIN 150 DAYS OF MANUFACTURE MAY BE USED. A PREPACKAGED GROUT IS ANY DRY BLEND OF THE LISTED MATERIALS FOUND IN CEMENT GROUT PRODUCED AND PACKAGED BY A COMMERCIAL GROUT MANUFACTURER. PROVIDE PREPACKAGED GROUT IN PLASTIC–LINED OR COATED BAGS. PRINT ON EACH BAG: APPLICATION, DATE OF MANUFACTURE, LOT NUMBER AND MIXING INSTRUCTIONS, INCLUDING THE MINIMUM AND MAXIMUM WATER CONTENT. IN ADDITION, SUBMIT TEST VALUES FOR ALL REQUIREMENTS IN THIS SECTION AT BOTH THE MINIMUM AND MAXIMUM WATER CONTENT TO THE DEPARTMENT.

MATERIAL

(A) CEMENT

1. PORTLAND CEMENT. TYPE I OR II CEMENT CONFORMING TO ASTM 450, STANDARD SPECIFICATION FOR PORTLAND CEMENT.

2. BLENDED CEMENT. CONFORMING TO ASTM C595, STANDARD SPECIFICATION FOR BLENDED HYDRAULIC CEMENTS.

3. CEMENT SHALL HAVE A BLAINE VALUE BETWEEN 3.85 AND 4.88 YD^2/LB.

(B) WATER

SECTION 720.1. LESS THAN 500 PPM OF CHLORIDE IONS WITHOUT PRESENCE OF ORGANIC MATERIALS.

(C) MINERAL ADDITIVES

1. FLY ASH OR CALCINED NATURAL POZZOLAN FOR USE AS A MINERAL ADMIXTURE IN PORTLAND CEMENT CONCRETE. THE AMOUNT OF FLY ASH GENERALLY VARIES BETWEEN 10% – 30% OF THE PORTLAND CEMENT BY WEIGHT (MASS). SUBMIT A MATERIAL SAFETY DATA SHEET (MSDS). CERTIFY AS SPECIFIED IN SECTION IN SECTION 106.03 (B) 3.

2. GROUND GRANULATED BLAST FURNACE SLAG. GRADE 120 SLAG IN ACCORDANCE WITH ASTM C989, GROUND GRANULATED BLAST FURNACE SLAG FOR USE IN CONCRETE AND MORTARS. THE AMOUNT OF SLAG GENERALLY VARIES BETWEEN 30% – 55% OF THE PORTLAND CEMENT CONTENT BY WEIGHT (MASS). CERTIFY AS SPECIFIED IN SECTION 106.03 (B) 3.

3. SILICA FUME. ASTM C1240 "SILICA FUME FOR USE IN HYDRAULIC CEMENT CONCRETE AND MORTAR." THE AMOUNT OF SILICA FUME GENERALLY VARIES BETWEEN 3% – 10% OF THE PORTLAND CEMENT BY WEIGHT (MASS). IF USED, SHOW THAT SILICA FUME PARTICLES DO NOT AGGLOMERATE THROUGH THE EVALUATION OF THE HARDENED GROUT. CERTIFY AS SPECIFIED IN SECTION 106.03 (B) 3.

(D) CHEMICAL ADMIXTURES

1. SET CONTROLLING. TYPE D – WATER–REDUCING AND RETARDING ADMIXTURES, TYPE E – NON–CHLORIDE WATRER–REDUCING AND ACCELERATING ADMIXTURES, TYPE F – WATER–REDUCING HIGH–RANGE ADMIXTURES, AND TYPE G – WATER–REDUCING HIGH–RANGE AND RETARDING ADMIXTURES IN ACCORDANCE WITH ASTM C494, STANDARD SPECIFICATION FOR CHEMICAL ADMIXTURES FOR CONCRETE. USE TYPES F AND G ONLY UP TO 45 OZ PER 100 LB OF PORTLAND CEMENT.

2. ANTI–BLEED. USE IN GROUT IF NECESSARY TO SATISFY THE TESTING REQUIREMENTS UNDER QUALITY CONTROL. USE NON–CORROSIVE ADMIXTURES.

3. EXPANSIVE AGENTS. USE ONLY INERT GAS FORMING ADMIXTURES. AVOID ANY GAS FORMING SYSTEM THAT PRODUCES HYDROGEN, CARBON DIOXIDE, OXYGEN OR AIR. WHEN INERT GAS IS FORMED, THE LEVEL OF VERTICAL HEIGHT CHANGE SHALL BE NO GREATER THAN 2.0% UP TO 3 HOURS CONFORMING TO ASTM C940, STANDARD TEST METHOD FOR EXPANSION AND BLEEDING OF FRESHLY MIXED GROUTS FOR PRE–PLACED AGGREGATE CONCRETE IN THE LABORATORY. IF THE CEMENT SOURCE OR COMPOSITION CHANGES, RETEST THE MATERIAL.

4. CORROSION INHIBITORS. CORROSION INHIBITORS ARE PROHIBITED.

(E) AGGREGATE

FINE AGGREGATE, TYPE A, WITH A MAXIMUM SIZE OF .039 IN, CONFORMING TO ASTM C33, STANDARD SPECIFICATION FOR CONCRETE AGGREGATES, EXCEPT FOR GRADATION, FROM A SOURCE LISTED IN BULLETIN 14 OR APPROVED BY MTD.

(F) FILLERS ARE NOT PERMITTED IN GROUT.

TESTING AND ACCEPTANCE

(A) TESTING FACILITIES AND EQUIPMENT

PROVIDE SUFFICIENT THERMOMETERS AND EQUIPMENT NEEDED FOR REQUIRED TESTS. HAVE BACK–UP EQUIPMENT AVAILABLE TO ENSURE THAT NO TESTS ARE MISSED. PROVIDE SUFFICIENT INCIDENTAL EQUIPMENT SUCH AS BUCKETS, SCOOPS, ETC., AS NEEDED. PROPERLY MAINTAIN ALL EQUIPMENT USED FOR TESTING. HAVE SCALES, BALANCES, AND THE COMPRESSION MACHINE CALIBRATED AT LEAST ONCE PER YEAR BY AN INDEPENDENT AGENCY ACCEPTABLE TO THE DEPARTMENT. RE–CALIBRATE THE COMPRESSION MACHINE WHEN RELOCATED. MAINTAIN ACCURATE RECORDS OF CALIBRATION. IF THE COMPRESSION MACHINE IS OUT OF TOLERANCE OR MALFUNCTIONS, RETURN IT TO WORKING ORDER WITHIN 24 HOURS OR SUPPLY A BACK–UP MACHINE UNTIL THE PROBLEM IS CORRECTED.

(B) PRE–QUALIFICATION TESTING

PRE–QUALIFY ALL PREPACKAGED GROUTS IN ACCORDANCE WITH THE REQUIREMENTS OF TABLE A: PERFORMANCE REQUIREMENTS FOR INCLUSION IN BULLETIN 15.

SUBMIT TEST REPORT OF PREPACKAGED GROUTS SHOWING CONFORMANCE TO TABLE A: PERFORMANCE REQUIREMENTS AT THE MAXIMUM AND MINIMUM ALLOWABLE WATER–CEMENTITIOUS MATERIALS RATIO AS STATED ON THE BAG. RETEST AND CERTIFY PREPACKAGED GROUTS A MINIMUM OF EVERY 1 YEAR FOR INCLUSION IN BULLETIN 15. SUBMIT SEPARATE TEST REPORTS FOR EACH PLANT PRODUCING GROUT. ALSO RETEST PREPACKAGED GROUTS WHEN THERE IS A CHANGE OF MATERIAL OR MATERIAL SOURCE. USE GROUT FROM ONE PLANT FOR ANY GIVEN PROJECT LOCATION. STATE ON THE BAG THE METHOD OF FLOW CONE TESTING (STANDARD OR MODIFIED) USED TO TEST GROUT FLUIDITY. ONCE A PREPACKAGED GROUT IS PREQUALIFIED WITHIN THE TWO YEAR PERIOD, THE ONLY TESTING REQUIRED FROM THE LIST BELOW FOR A SPECIFIC PROJECT LOCATION IS QUALITY CONTROL TESTING AS GIVEN IN SECTION (I). ALL GROUTS SHOULD BE USED WITHIN THE SPECIFIED SHELF–LIFE AS GIVEN BY THE MANUFACTURER.

1. SETTING TIME TEST. ASTM C953, STANDARD TEST METHOD FOR TIME OF SETTING OF GROUTS FOR PREPLACED AGGREGATE CONCRETE IN THE LABORATORY. FOR STIFFER PASTE MIXES, FOLLOW AASHTO T–131, STANDARD TEST METHOD FOR TIME OF SETTING OF HYDRAULIC CEMENT BY VICAT NEEDLE.

2. GROUT STRENGTH TEST. ASTM C942, STANDARD TEST METHOD FOR COMPRESSIVE STRENGTH OF GROUTS FOR PREPLACED–AGGREGATE CONCRETE IN THE LABORATORY. IF THE GROUT IS EXPANSIVE, COVER CUBES WITH WEIGHTED PLATES SUFFICIENT TO CONTAIN THE EXPANSION DURING CURE.

3. PERMEABILITY TEST. ASTM C1202, TEST METHOD FOR ELECTRICAL INDICATION OF CONCRETE'S ABILITY TO RESIST CHLORIDE ION PENETRATION. USE A VOLTAGE OF 30 V.

4. VOLUME CHANGE TEST – ASTM C1090, STANDARD TEST METHOD FOR MEASURING CHANGES IN HEIGHT OF CYLINDRICAL SPECIMEN FROM HYDRAULIC–CEMENT GROUT.

5. THIXOTROPIC GROUT PUMPABILITY AND FLUIDITY TEST – MODIFIED VERSION OF ASTM C939. FILL THE FLOW CONE TO THE TOP WITH GROUT AND MEASURE THE EFFLUX TIME TO FILL ONE LITER.

6. WICK INDUCED BLEED TEST – A MODIFICATION OF THE ASTM C940 TEST AS OUTLINED IN SECTION C4.4.6.1 SHALL BE USED. THE TESTING DEVICE SHALL CONSIST OF A TRANSPARENT TUBE AND HAVE THE FOLLOWING APPROXIMATE DIMENSIONS: HEIGHT 40IN. AND INTERNAL NOMINAL DIAMETER OF 3IN. THE MAXIMUM PERMISSIBLE BLEEDING SHALL BE 0.0% AT THREE HOURS WHEN RUN AT A NOMINAL AMBIENT ROOM TEMPERATURE OF APPROXIMATELY 68°F.

7. SCHUPACK PRESSURE BLEED TEST – ASTM 1741, ACCEPTABLE BLEED VALUES FOR CLASS B, C, AND D GROUTS ARE SHOWN IN TABLE B.

8. ACCELERATED CORROSION TEST (ACT) – FOLLOW APPENDIX B OF THE GUIDE SPECIFICATION FOR GROUTING OF POST–TENSIONED STRUCTURES, PUBLISHED BY THE POST–TENSIONING INSTITUTE.

9. API MUD BALANCE TEST – API RECOMMENDED PRACTICE 13B–1, STANDARD PROCEDURES FOR FIELD TESTING WATER–BASED DRILLING FLUIDS. THE MUD BALANCE APPARATUS SHOULD BE NON–REACTIVE WITH THE GROUT.

10. CHLORIDE ION CONTENT – ASTM C1152. CHLORIDE ION CONTENT SHOULD BE INDIVIDUALLY TESTED ON THE TRIAL BATCH TO BE SHOWN IT IS BELOW THE LIMIT IN TABLE A FOR THE MIXED GROUT. ALL MATERIALS, INCLUDING THE WATER, SHALL BE THE SAME SOURCE AS WILL BE USED FOR FOR THE PRODUCTION GROUTING, ONE CHLORIDE ION CONCENTRATION TEST SHALL BE PERFORMED ON THE MIXED GROUT ONCE PER PROJECT AND MINIMUM EVERY 18 TONS (40,000 LB) OF THE MATERIAL BEFORE THE ADDITION OF WATER.

BLEED

11. INCLINED TUBE TEST – GROUT BLEEDING SHALL NOT EXCEED 0.3% OF THE INITIAL VOLUME OF THE GROUT AFTER THREE HOURS KEPT AT REST. THE INCLINED TUBE TEST SHALL BE PERFORMED IN ACCORDANCE WITH EN 445.

TABLE A: PERFORMANCE REQUIREMENTS

TEST	PERFORMANCE CRITERIA	TEST METHOD
SETTING TIME TEST	MIN. 3 HOURS; MAX 12 HOURS	ASTM C953*
GROUT STRENGTH TEST (AVERAGE OF 3 CUBES)	≥ 3,000 PSI AT 7 DAYS, ≥ 5,000 PSI AT 28 DAYS	MIN C942
PERMEABILITY TEST (AT 28 DAYS)	MAX 2,500 COULOMBS AT 30V AFTER 6 HOURS	ASTM C1202
VOLUME CHANGE TEST	0.0% TO +0.1% AT 24 HOURS MAX. +0.2% AT 28 DAYS	ASTM C1090
THIXOTROPIC FLUIDITY TEST**	5 TO 20 SEC., IMMEDIATELY AFTER MIXING MAX. 30 SEC. 30 MIN AFTER MIXING WITH REMIXING FOR 30 SEC.	MODIFIED ASTM C939
WICK INDUCED BLEED TEST (AT 3 HOURS)	MAX. 0.0%	MODIFIED ASTM C940
SCHUPACK PRESSURE BLEED TEST	SEE TABLE B	
ACCELERATED CORROSION TEST (AVERAGE TIME TO CORROSION)	>0.45 W/CM, PLAIN GROUT USING SAME EQUIPMENT APPENDIX B GUIDE SPECIFICATION FOR GROUTING OF POST–TENSIONED STRUCTURES, PUBLISHED BY THE POST–TENSIONING INSTITUTE.	
API MUD BALANCE TEST	VALUE > 1.9	
CHLORIDE ION CONTENT	MAX. 0.08% BY WEIGHT OF CEMENTITIOUS MATERIAL	ASTM C1152
INCLINED TUBE BLEED TEST	MAX 0.3% OF INITIAL VOLUME OF GROUT AFTER 3 HOURS	EN 445

* FOR STIFFER PASTE MIXES, FOLLOW AASHTO T–131.
** MEET EITHER THE STANDARD ASTM C939 FLOW CONE TEST OR THE MODIFIED TEST. ENSURE THAT THE BAG OF PREPACKAGED GROUT STATES WHICH TEST SHOULD BE USED.

TABLE B: SCHUPACK PRESSURE TEST LIMITS
(BLEED UNDER PRESSURE LIMITS)

VERTICAL RISE, X (FT)	SCHUPACK PRESSURE (PSI)	MAX% BLEED (% OF SAMPLE VOLUME)
0 ≤ X ≤ 2	20	4
2 < X ≤ 6	30	2
6 < X ≤ 20	50	0
X > 20	100	0

NOTE: PRESSURE VALUES IN TABLE B ARE NOT HARD CONVERSIONS. REPORT RESULTS IN THE UNITS OF THE PRESSURE GAUGE USED.

(C) MATERIALS CERTIFICATION

PROVIDE WRITTEN CERTIFICATION THAT ALL INGREDIENTS USED IN THE GROUT CONFORM TO THE MATERIAL SECTION OF THIS SPECIFICATION. THIS SHALL INCLUDE, BUT SHALL NOT BE LIMITED TO, TEST REPORTS FOR:

a. CEMENT MILL TEST REPORTS;
b. MINERAL ADDITIVES' TEST REPORTS;
c. CHEMICAL ADMIXTURES' TEST REPORTS;
d. CHLORIDE ION LEVELS OF ALL CONSTITUENTS;
e. SHELF LIFE/EXPIRATION OF ADMIXTURES; AND
f. TEST REPORTS FOR ANY OTHER INGREDIENTS USED IN THE GROUT.

CONSTRUCTION

(A) GROUT TECHNICIAN

PROVIDE, AND ASSIGN TO THE WORK, AN AMERICAN SEGMENTAL BRIDGE INSTITUTE (ASBI) CERTIFIED GROUT TECHNICIAN TO CONTROL THE QUALITY OF THE MATERIALS USED, TO PERFORM REQUIRED GROUT TESTS, AND TO CONTROL THE OPERATIONS SO THAT THE GROUT COMPLIES WITH SPECIFICATIONS AT THE POINT OF PLACEMENT.

THE INSPECTOR DOES NOT ASSUME, BY ACT OR BY WORD, ANY RESPONSIBILITY FOR BATCH CONTROL ADJUSTMENTS; CALCULATIONS; OR FOR SETTING OF ANY DIALS, GAUGES, SCALES, OR METERS. FAILURE OF THE INSPECTOR TO REJECT GROUT DOES NOT RELIEVE THE CONTRACTOR'S OBLIGATION TO PROVIDE GROUT MEETING SPECIFICATIONS.

(B) INLETS AND OUTLETS

PROVIDE THE MINIMUM INNER DIAMETER OF INLETS AND OUTLETS WITH AT LEAST 3/4 IN FOR STRAND TENDONS AND 3/8 IN FOR SINGLE BAR TENDONS. PLACE INLETS AND OUTLETS AT LOCATIONS RECOMMENDED BY THE DESIGN OR CONSTRUCTION ENGINEER AND AT THE FOLLOWING LOCATIONS:

- AT THE ANCHORAGE AREA OF THE TENDON.
- AT THE HIGH POINTS OF THE DUCT, WHEN THE VERTICAL DISTANCE BETWEEN THE HIGHEST AND LOWEST POINT IS MORE THAN 20 IN
- WHERE OUTLETS ARE PLACED AT THE HIGH POINTS, AT A DISTANCE NOT TO EXCEED 39 IN IN BOTH DIRECTIONS FROM THE HIGH–POINT OUTLETS.
- AN ADDITIONAL OUTLET AT A SHORT DISTANCE DOWNSTREAM (AT APPROXIMATELY THE LOCATION WHERE THERE HAS BEEN A VERTICAL DROP OF A DISTANCE EQUAL TO ONE DUCT DIAMETER) OF A HIGH POINT OUTLET.
- AT MAJOR CHANGES IN THE CROSS–SECTION OF THE DUCT, SUCH AS COUPLERS AND ANCHORAGES.
- AT ALL LOW POINTS (FREE–DRAINING).
- PRIMARY INLET: AT OR NEAR THE LOWEST POINT OF THE TENDON.

PROVIDE INLETS AND OUTLETS WITH POSITIVE SHUT–OFFS AND CHECK TO BE SURE THEY CAN BE PROPERLY OPENED AND CLOSED.

PENNDOT DRAWING 12–601–BDTD

5/1/2013

CORRECTIONS MADE BY BRIDGE DESIGN AND TECHNOLOGY DIVISION ON 10-31-13 ON THE GROUT REQUIREMENTS TO MEET STATE OF PRACTICE

COMMONWEALTH OF PENNSYLVANIA
REGISTERED PROFESSIONAL
C. BRIAN SLAGLE
ENGINEER
PE075107

CENTRAL ATLANTIC BRIDGE ASSOCIATES (CABA)	JANSSEN & SPAANS ENGINEERING, 9120 HARRISON PARK COURT, INDIANAPOLIS, INDIANA 46216, Business (317) 254-9696 Fax (317) 259-8282
COMMONWEALTH OF PENNSYLVANIA DEPARTMENT OF TRANSPORTATION	DATE: 8/11
	SCALE: N/A
SPLICED PRESTRESSED CONCRETE GIRDER STANDARDS	DWN: TAL CK'D: LS
	JOB NO.
GROUT SPECIFICATIONS	SHEET NO. 124

Time: 13:52:28
Date: 4/6/2012
Scale: 1=(PS)
Drawing File: 996 - Standards for Spliced I-Girders\DWGS\BRIDGE\SHT-120.dwg (TLegan)

(C) GROUTING EQUIPMENT

PROVIDE GROUTING EQUIPMENT THAT WILL GROUT THE LONGEST TENDON ON THE PROJECT IN LESS THAN 30 MINUTES ONCE MIXING BEGINS AND THAT WILL PROVIDE A CONTINUOUS SUPPLY OF HOMOGENOUS GROUT (UNLESS WAIVED BY THE ENGINEER FOR PROJECTS WITH VERY LARGE TENDONS). PLACE A SCREEN BETWEEN THE MIXER AND THE PUMP, OR BETWEEN THE MIXER AND THE STORAGE HOPPER. PROVIDE A BACKUP GROUT MIXER AND PUMP. WHERE WATER IS NOT SUPPLIED THROUGH THE PUBLIC WATER SUPPLY SYSTEM, PROVIDE A WATER STORAGE TANK OF SUFFICIENT CAPACITY AND PROVIDE APPROVED PRESSURIZED FLUSHING EQUIPMENT.

1. MIXER. USE THE MIXER TYPE PLANNED FOR PUMPING IN A FIELD TRIAL TO ENSURE PROPERTIES SIMILAR TO THOSE FROM PREQUALIFICATION TESTING WILL BE ACHIEVED AND TO DETERMINE OPTIMUM MIXING TIME.

– HIGH–SHEAR OR COLLOIDAL MIXER. MINIMUM 1,500 RPM.

2. STORAGE HOPPER. EQUIP THE STORAGE HOPPER WITH AN AGITATOR. KEEP THE STORAGE HOPPER PARTIALLY FULL AT ALL TIMES WHILE PUMPING TO AVOID PUMPING AIR INTO THE TENDON. IF AN ADDITIONAL STORAGE HOPPER IS NEEDED, PLACE IT BETWEEN THE MIXER AND PUMP AND EQUIP IT WITH AN AGITATOR.

3. SCREEN. MAXIMUM SCREEN OPENING OF 0.125 IN. (0.118 IF THE GROUT CONTAINS THIXOTROPIC ADMIXTURE)

4. GROUT INJECTION EQUIPMENT. USE EQUIPMENT WITH A SYSTEM THAT CAN RECIRCULATE THE GROUT WHILE GROUTING HAS TEMPORARILY STOPPED. PLACE A VALVE ON THE EQUIPMENT THAT CAN LOCK OFF THE TENDON UNDER PRESSURE ONCE THE DUCT IS COMPLETELY GROUTED.

– PUMP, USE A POSITIVE PRESSURE PUMP THAT CAN MAINTAIN AN OUTLET PRESSURE OF AT LEAST 145 PSI USE A PUMP WITH SEALS TO KEEP OIL, AIR, AND OTHER SUBSTANCES OUT OF THE GROUT AND TO PREVENT ANY LOSS OF THE GROUT AND WATER.
– PRESSURE GAUGE. PLACE A PRESSURE GAUGE CAPABLE OF READING NO MORE THAN 290 PSI BETWEEN THE PUMPING OUTLET AND THE DUCT INLET.

5. VACUUM GROUTING EQUIPMENT. IF INSPECTION INDICATES THAT REPAIRS ARE NEEDED, PROVIDE VACUUM GROUTING EQUIPMENT AT THE JOB SITE. USE VACUUM GROUTING EQUIPMENT OF THE VOLUMETRIC MEASURING TYPE WITH THE ABILITY TO MEASURE A VOID AND SUPPLY A MEASURED VOLUME OF GROUT TO FILL THE VOID.

6. COMPRESSED AIR. USE OIL–FREE AND WATER–FREE COMPRESSED AIR TO CHECK THE DUCTS FOR LEAKS AND TO EXPEL ANY EXCESS WATER BEFORE THE GROUTING OPERATION BEGINS.

(D) PROTECTION OF TENDONS PRIOR TO GROUTING

1. PRIOR TO INSTALLATION. CAP DUCTS TO PREVENT ENTRANCE OF MOISTURE, CHLORIDES, OR DEBRIS PRIOR TO INSTALLATION OF THE PRESTRESSING STRAND. LEAVE VENTS CLOSED UNTIL AIR TESTING.

2. AFTER INSTALLATION. PREVENT PRECIPITATION AND DEBRIS FROM ENTERING DUCTS AT ALL TIMES. IF STRAND WILL BE EXPOSED FOR MORE THAN 24 HOURS BETWEEN INSTALLATION AND STRESSING, WRAP STRAND ENDS AND THE ANCHORAGE OPENING WITH PLASTIC AND WATERPROOF TAPE TO PREVENT EXPOSURE TO MOISTURE AND CHLORIDES.

3. AFTER STRESSING. CAP AND COVER ANCHORAGES IMMEDIATELY AFTER STRAND TAILS ARE CUT TO PREVENT ENTRANCE OF MOISTURE OR CHLORIDES. AFTER TENDONS ARE AIR TESTED, CLOSE ALL VENTS AND INSTALL PERMANENT GROUT CAPS. PERMISSIBLE TIME LIMIT FOR EXPOSURE BETWEEN STRESSING AND GROUTING WITHOUT ADDITIONAL CORROSION PROTECTION IS 7 DAYS.

– ADDITIONAL CORROSION PROTECTION. IF THE TENDONS WILL NOT BE GROUTED WITHIN 7 DAYS FROM THE TIME OF STRESSING, ADDITIONAL CORROSION PROTECTION IS REQUIRED. ADDITIONAL PROTECTION MAY INCLUDE CORROSION–INHIBITING MATERIALS APPLIED TO THE STRAND PRIOR TO INSERTION IN THE DUCT, CORROSION INHIBITORS BLOWN INTO THE DUCT AFTER STRESSING, OR OTHER METHODS APPROVED BY THE ENGINEER. MATERIALS APPLIED TO THE STRAND MAY REDUCE BOND. TEST RESULTS SHOWING CORROSION PROTECTION AND DEGREE OF BOND REDUCTION IN PULL–OUT TESTS MUST BE PROVIDED TO THE ENGINEER PRIOR TO APPROVAL OF THE USE OF THE CORROSION – INHIBITING MATERIAL THE MATERIAL MUST BE COMPATIBLE WITH GROUT. TENDONS SHOULD NOT BE FLUSHED WITH WATER PRIOR TO GROUTING.

(E) GROUTING PLAN

SUBMIT A GROUTING PLAN TO THE ENGINEER FOR REVIEW AND ACCEPTANCE AT LEAST 4 WEEKS PRIOR TO GROUTING. PERFORM A MOCK–UP TEST WITH THE EQUIPMENT AND MATERIALS THAT WILL BE USED ON THE JOB AND SUBMIT RESULTS WITH THE GROUTING PLAN. INCLUDE THE FOLLOWING IN THE GROUTING PLAN:

– NAMES, EXPERIENCE AND QUALIFICATIONS OF GROUTING CREW AND SUPERVISOR: ASBI CERTIFICATION DOCUMENTATION FOR THE TECHNICIAN AND BACKUP.
– TYPE OF EQUIPMENT (TYPE, SPEED, CAPACITY, INCLUDING BACK–UP EQUIPMENT).
– TARGETED FLOW RATE DURING PUMPING AND METHOD OF CONTROLLING RATE.
– TYPE OF GROUT AND WATER CONTENT THAT WILL BE USED FOR INITIAL ON–SITE MIX.
– ESTIMATED QUANTITY OF GROUT FOR EACH TENDON GROUP.
– MATERIALS CERTIFICATION.
– LIST OF ON–SITE TESTING AND FREQUENCY.
– INLET AND VENTING DETAILS (TYPE, LOCATION, SIZE).
– PLANS FOR PROTECTION OF TENDONS PRIOR TO GROUTING (PRIOR TO INSTALLATION AND AFTER INSTALLATION).
– PROVIDE A PLAN (ADDITIONAL PROTECTION) IF TENDONS WILL REMAIN UNGROUTED MORE THAN 7 DAYS.
– AIR TESTING PROCEDURE.
– GROUT MIXING AND PUMPING PROCEDURES.
– ORDER OF TENDON GROUTING.
– DIRECTION OF GROUTING AND SEQUENCE OF VENT SHUTOFF.
– PROCEDURES FOR BLOCKAGES (INCLUDING MEANS OF FLUSHING IF NECESSARY)
– PROCEDURES FOR INSPECTION OF TENDONS AFTER GROUTING.
– PROCEDURES FOR FILLING ANY VOIDS.
– SAMPLE GROUTING RECORD FORMS.
– RESULTS OF TENDON MOCK–UP.

(F) PRE–GROUTING OPERATIONS

STORE GROUT IN A DRY LOCATION. IF STORING IN THE OPEN, THE GROUT MUST BE ON A RAISED PLATFORM WITH ADEQUATE WATERPROOF COVERING. LIMIT ON–SITE STORAGE OF GROUT TO A MAXIMUM PERIOD OF ONE MONTH. GROUT MUST BE USED WITHIN 150 DAYS OF DATE OF MANUFACTURE.

PLACE A PERMANENT PLASTIC END CAP WITH A VENT OVER EACH ANCHOR HEAD IMMEDIATELY AFTER STRAND TAILS ARE CUT.

BEFORE GROUTING BEGINS, CHECK AND PREPARE DUCTS BY BLOWING THROUGH OIL–FREE AND WATER–FREE COMPRESSED AIR. OPEN AND CLOSE EACH VENT IN TURN TO BLOW OUT MOISTURE. THE DUCT SHOULD BE ABLE TO MAINTAIN A PRESSURE OF 20 PSI WITH ALL VENTS CLOSED. IF THE SYSTEM CANNOT HOLD PRESSURE, LOCATE AND REPAIR LEAKS PRIOR TO GROUTING.

ATTAIN ACCEPTANCE OF THE GROUTING PROCEDURE FROM THE ENGINEER PRIOR TO GROUTING. INCLUDE THE FOLLOWING IN THE PROCEDURE:

– INSPECTION TO ENSURE THAT ALL MATERIALS ARE OF THE SPECIFIED TYPE AND QUANTITY.
– INSPECTION TO ENSURE THAT ALL EQUIPMENT IS IN SATISFACTORY CONDITION.
– INSPECTION OF DUCTS TO ENSURE THAT THEY ARE FREE OF WATER, DEBRIS, AND OTHER OBSTRUCTIONS.
– INSPECTION OF DUCTS TO ENSURE THAT THERE WILL BE NO GROUT LEAKAGE BETWEEN ADJACENT DUCTS IN THE JOINT AREAS OR AT COUPLERS FOR EXTERNAL TENDONS.
– TEMPERATURE MEASUREMENT OF AIR, WATER, AND PREPACKAGED GROUT TO ENSURE THAT THEY ARE WITHIN THE ACCEPTANCE REQUIREMENTS SPECIFIED FOR TEMPERATURE CONSIDERATIONS.
– INSPECTION OF ALL PREPACKAGED GROUT OR CEMENT PACKAGES FOR EVIDENCE OF AGE AND DAMPNESS, SUCH AS LUMPS AND HARDENED PIECES.
– COMMENCE GROUTING OPERATIONS ONLY AFTER THE ENGINEER'S ACCEPTANCE TO PROCEED IS RECEIVED.
– GROUT ONLY WHEN BOTH THE AMBIENT AIR TEMPERATURE AND SUBSTRATE TEMPERATURE ARE AT LEAST 41 DEGREES F DURING THE GROUTING OPERATION AND FOR 3 HOURS THEREAFTER. ADDITIONALLY, GROUT TEMPERATURE MUST BE MAINTAINED ABOVE 35 DEGREES F FOR 3 CONSECUTIVE DAYS AFTER GROUTING.

(G) MIXING CONDITIONS

1. HOT WEATHER. EMPLOY HOT–WEATHER MIXING AND PROTECTION METHODS WHEN THE AMBIENT AIR TEMPERATURE EXCEEDS 90° F. COOL–MIX WATER TO MAINTAIN GROUT TEMPERATURE AT 80° F OR BELOW AT THE TIME OF GROUTING. ICE MAY BE NECESSARY AND IF USED SHOULD BE ADDED TO THE MIX WATER TO LOWER THE WATER TEMPERATURE PRIOR TO MIXING. DO NOT ALLOW ICE IN THE GROUT MIXTURE.

2. COLD WEATHER. MAINTAIN A DAILY RECORD OF MINIMUM AND MAXIMUM AMBIENT AIR TEMPERATURES DURING COLD WEATHER. RECORD THE TEMPERATURE OF THE GROUT DRY INGREDIENTS AND THE STRUCTURE SURROUNDING THE DUCTS TO BE GROUTED.

WHEN AMBIENT AIR TEMPERATURE HAS BEEN BELOW (32° F) AFTER DUCT PLACEMENT AND PRIOR TO GROUTING, BLOW DRY AIR THROUGH THE DUCTS TO EXPEL ANY TRAPPED WATER, FROST, OR ICE. GROUT ONLY WHEN BOTH THE AMBIENT AIR TEMPERATURE AND SUBSTRATE TEMPERATURE ARE AT LEAST 41 DEGREES F DURING THE GROUTING OPERATION AND FOR 3 HOURS THEREAFTER. ADDITIONALLY, GROUT TEMPERATURE MUST BE MAINTAINED ABOVE 35 DEGREES F FOR 3 CONSECUTIVE DAYS AFTER GROUTING.

(H) GROUTING OPERATIONS

OPEN ALL VENTS JUST PRIOR TO GROUTING. GROUT TENDONS IN AN UPHILL DIRECTION. UNLESS OTHERWISE APPROVED BY THE ENGINEER (IN CASES WITH UNUSUAL GEOMETRY OR CONSTRUCTION PROBLEMS), START GROUTING FROM NEAR THE LOWEST INLET. MAINTAIN A CONTINUOUS, ONE–WAY FLOW FOR THE DURATION OF A GROUTING STAGE. USE A METHOD OF INJECTING GROUT THAT ENSURES COMPLETE FILLING OF THE DUCTS AND COMPLETE SURROUNDING OF THE STRAND OR BAR WITHIN 30 MINUTES OF THE FIRST ADDITION OF WATER TO THE DRY INGREDIENTS UNLESS OTHERWISE APPROVED BY THE ENGINEER.

INJECT GROUT AT A TARGET RATE BETWEEN 16.4 FT AND 49.2 FT OF DUCT PER MINUTE UNLESS OTHERWISE APPROVED BY THE ENGINEER. PUMP THE GROUT THROUGH THE DUCT UNTIL THERE IS CONTINUOUS FLOW AT THE FIRST OUTLET. CLOSE THE OUTLET AFTER THE EJECTED GROUT FLOW SHOWS NO VISIBLE POCKETS OF WATER OR AIR AND THE CONSISTENCY OF THE GROUT IS THE SAME AS THAT OF THE GROUT BEING PUMPED. EJECT A MINIMUM OF 1 GALLON OF WASTE GROUT FROM EACH VENT (OUTLET) AND APPROXIMATELY 5 GALLONS FROM THE FINAL OUTLET. IF GROUT CONSISTENCY IS DIFFERENT THAN AT INLET, CONTINUE TO EJECT GROUT UNTIL THE SAME GROUT CONSISTENCY OR FLUIDITY TEST VALUE IS OBTAINED. CLOSE ALL OUTLETS ONE AFTER THE OTHER IN A SIMILAR MANNER IN THE DIRECTION OF THE FLOW WITH THE EXCEPTION OF OUTLETS LOCATED AT INTERMEDIATE CRESTS. CLOSE THE DOWNSTREAM CREST OUTLETS BEFORE THE ASSOCIATED CREST OUTLET.

NORMAL GROUTING OPERATIONS WILL TYPICALLY BE PERFORMED AT APPROXIMATELY 75 PSI, AND TYPICALLY WILL NOT EXCEED:

– 145 PSI – INTERNAL POLYETHYLENE DUCTS, OVAL STEEL DUCTS, FLAT STEEL DUCTS, AND EXTERNAL HIGH DENSITY POLYETHYLENE (HDPE) PIPE.

– 245 PSI – INTERNAL CIRCULAR STEEL DUCTS.

IF THE GROUTING PRESSURE EXCEEDS THE MAXIMUM ALLOWED, CLOSE THE INLET AND INJECT GROUT AT THE NEXT OUTLET THAT HAS JUST BEEN OR IS READY TO BE CLOSED, PROVIDED A ONE–WAY FLOW IS MAINTAINED. FIT THE OUTLET THAT IS TO BE USED AS THE NEW INLET WITH A POSITIVE SHUT–OFF.

TO PREVENT THE UNINTENDED LOSS OF GROUT, AFTER THE TENDON DUCT IS COMPLETELY FILLED WITH GROUT AND ALL OUTLETS HAVE BEEN CLOSED, MAINTAIN THE NORMAL GROUT PRESSURE FOR 1 MINUTE BEFORE THE INLET IS SEALED OFF UNDER PRESSURE.

1. VERTICAL GROUTING. PROVIDE A STANDPIPE AT THE UPPER END OF THE TENDON FOR ALL VERTICAL TENDONS TO COLLECT BLEED WATER TO BE REMOVED FROM THE GROUT. IF THE LEVEL OF THE GROUT DROPS BELOW THE HIGHEST POINT IN THE ANCHORAGE DEVICE ADD ADDITIONAL GROUT TO THE STANDPIPE IMMEDIATELY. REMOVE THE STANDPIPE AFTER THE GROUT HAS HARDENED. GROUTS USED FOR VERTICAL GROUTING MUST MEET THE SCHUPACK PRESSURE TESTING REQUIREMENTS. THE STANDPIPE IS A PRECAUTIONARY MEASURE AND NOT A SUBSTITUTION FOR THESE REQUIREMENTS.

IF THE GROUTING PRESSURE EXCEEDS THE MAXIMUM ALLOWED, CLOSE THE INLET AND INJECT THE GROUT AT THE NEXT HIGHER OUTLET THAT HAS JUST BEEN, OR IS READY TO BE CLOSED, PROVIDED A ONE–WAY FLOW IS MAINTAINED. ALLOW GROUT TO FLOW FROM THE OUTLET UNTIL ALL VISIBLE AIR AND WATER HAVE BEEN REMOVED BEFORE USING THAT OUTLET FOR INJECTION. GROUTING IN LIFTS MAY BE NECESSARY FOR TALL VERTICAL APPLICATIONS AS PER THE FOLLOWING PROCEDURE. GROUT THE STAY IN LIFTS UNLESS A PRIOR MOCK–UP SHOWS THAT THE STAY CAN BE SUCCESSFULLY GROUTED IN ANOTHER MANNER. THE ENGINEER MAY APPROVE GROUTING OF A STAY IN A SINGLE OPERATION IF THE CONTRACTOR SUBMITS INFORMATION WHICH ADEQUATELY ESTABLISHES THAT THE MATERIALS, EQUIPMENT AND PROCEDURE INTENDED FOR USE WILL NOT DAMAGE THE PIPE. THE INFORMATION MUST SHOW THAT THE GROUTING PRESSURE WILL NOT DAMAGE THE POLYETHYLENE PIPE AT –22° F AFTER THE GROUT IS CURED. IF ANY INDICATIONS OF GROUTING IRREGULARITIES APPEAR THAT ARE ATTRIBUTABLE TO SINGLE OPERATION GROUTING, DISCONTINUE THE METHOD AND USE MULTIPLE LIFT GROUTING.

PENNDOT DRAWING 12–601–BDTD

5/1/2013

COMMONWEALTH OF PENNSYLVANIA
REGISTERED PROFESSIONAL
C. BRIAN SLAGLE
ENGINEER
PE075107

CENTRAL ATLANTIC BRIDGE ASSOCIATES (CABA)	JANSSEN & SPAANS ENGINEERING, 9120 HARRISON PARK COURT, INDIANAPOLIS, INDIANA 46216, Business (317) 254-9696 Fax (317) 259-6382
COMMONWEALTH OF PENNSYLVANIA DEPARTMENT OF TRANSPORTATION	DATE: 8/11
	SCALE: N/A
SPLICED PRESTRESSED CONCRETE GIRDER STANDARDS	DWN: TAL CK'D: LS
	JOB NO.
GROUT SPECIFICATIONS	SHEET NO. 125

Time: 13:50:38
Date: 4/6/2012
Scale: 1=1PS3
Drawing File: 996 - Standards for Spliced I-Girders\DWGS\BRIDGE\SHT-121.dwg (TLeggon)

LIFT METHOD – WATER FLUSHING IS NOT PERMITTED TO CLEAN THE PIPES AND THE WIRE OR STRAND BUNDLES.

DO NOT EXCEED GROUT LIFTS OF 125 FT IN HEIGHT FOR HDPE PIPE STAY CABLES. LIMIT THE FIRST GROUT LIFT IN EACH STAY CABLE TO 20 FT ABOVE THE DECK. LIMIT THE LAST LIFT OF GROUT TO THE SMALLEST DIMENSION CONSISTENT WITH THE DIMENSIONS OF THE TOWER OR PYLON THIS MINIMIZES THE POSSIBILITY OF CREATING A GROUT VOID IN THE TOP OF THE PIPE.

INSTALL GROUT PORTS AT THE TIP AND BOTTOM OF EACH GROUT LIFT. BEGIN GROUTING AT THE LOWEST INJECTION PORT WHILE ALL VENTS REMAIN OPEN. MAINTAIN A PUMPING PRESSURE THROUGH THE PIPE UNTIL THE GROUT FLOWS FOR A MINIMUM OF 15 SECONDS OUT THE NEXT VENT HOLE AFTER NO VISIBLE WATER OR AIR ARE EJECTED. NEXT CLOSE THE VENT AND SECURELY CAP THE INJECTION PORT. AFTER THE GROUT HAS HARDENED, DRAIN OFF ANY RESIDUAL WATER ON TOP PRIOR TO BEGINNING THE NEXT GROUTING LIFT. MOVE THE GROUTING OPERATION TO THE NEXT BEGINNING THE NEXT GROUTING LIFT. MOVE THE GROUTING OPERATION TO THE NEXT HIGHER PORT AND REPEAT THE GROUTING PROCESS UNTIL THE ENTIRE STAY CABLE IS FILLED WITH GROUT.

DO NOT EXCEED DIAMETRICAL EXPANSION OF THE HDPE PIPE ABOVE 2% OF THE ORIGINAL NOMINAL DIAMETER. ELIMINATE THE DIAMETRICAL EXPANSION AT THE GROUT INJECTION POINT BY THE USE OF STEEL CLAMPS. SECURELY CLAMP THE PIPE AT THE NEXT INJECTION PORT AFTER THE PREVIOUS GROUT LIFT HARDENS BUT BEFORE PROCEEDING WITH THE NEXT GROUT LIFT.

FIT THE GROUT OUTLET FOR THE TOP LIFT WITH A STANDPIPE AT LEAST 4 FT HIGH. FILL ANY VOID REMAINING IN THE GROUT COLUMN WITHIN THE STAY CABLE FOLLOWING THE FINAL GROUT LIFT WITH GROUT. BLOW OUT WITH COMPRESSED OIL–FREE AIR ANY ACCUMULATED WATER IN THE UPPERMOST GROUT VENT BEFORE GROUTING EXISTING CAVITY. AFTER AIR–FREE GROUT FLOWS FOR A PERIOD OF 15 SECONDS, CAP THE VENT AND GROUT PORTS.

IMMEDIATELY WASH AWAY GROUT COMING IN CONTACT WITH THE OUTSIDE SURFACE OF THE STAY CABLE OR OTHER COMPONENTS.

WHEN THE GROUTING PROCESS IS COMPLETE, REMOVE GROUT PUMPING PIPES AND VENTS AND PATCH CABLE STAY SHEATHING AS NECESSARY AT VENT HOLES TO ENSURE WATER TIGHTNESS OF THE SHEATHING.

(I) QUALITY CONTROL TESTING

NOTIFY THE DEPARTMENT'S REPRESENTATIVE WHEN QUALITY CONTROL TESTING IS TO BE PERFORMED. THE ASBI CERTIFIED GROUT TECHNICIAN RUNS THE QUALITY CONTROL TESTING. THE PRODUCTION GROUT MEETS OR EXCEEDS THE REQUIREMENTS IN TABLE C.

TABLE C: QUALITY CONTROL TESTING REQUIREMENTS

TEST	FREQUENCY	PERFORMANCE CRITERIA	TEST METHOD
GROUT STRENGTH TEST (AVERAGE OF 3 CUBES)	1 PER DAY	≥ 3,000 PSI AT 7 DAYS ≥ 5,000 PSI AT 28 DAYS	ASTM C942
FLUIDITY TEST	1 EVERY* 2 HOURS	WITHIN ± 5 SEC OF VALUES ESTABLISHED DURING LABORATORY TESTING	ASTM C939**
SCHUPACK PRESSURE BLEED TEST	1 PER DAY*	ASTM 1741	
API MUD BALANCE TEST	2 PER DAY***	VALUE SHALL BE BETWEEN THE VALUES OBTAINED DURING PRE–QUALIFICATION TESTING AND MINIMUM AND MAXIMUM WATER DOSAGE.	

* TAKEN AT THE INLET.

** USE EITHER THE STANDARD ASTM C939 FLOW CONE TEST OR THE MODIFIED TEST DEPENDING ON WHICH WAS APPROVED AND USED INITIALLY IN THE LABORATORY TESTING.

*** OR WHEN THERE IS A VISUAL OR APPARENT CHANGE IN THE CHARACTERISTICS OF THE GROUT. IN ADDITION TO THE TWO PER DAY, TAKE AN ADDITIONAL SAMPLE FROM THE DUCT OUTLET TO ENSURE THAT EXTRA WATER IS NOT PRESENT IN THE TENDON.

(J) POST–GROUTING OPERATIONS

CLEAN ALL EQUIPMENT THOROUGHLY AFTER GROUTING. DO NOT REMOVE OR OPEN THE VALVES, CAPS, AND PIPES AT THE INLET AND OUTLET UNTIL THE GROUT HAS SET. DO NOT SUBJECT GROUTED TENDONS TO VIBRATION FOR A MINIMUM OF 4 HOURS IF A PREQUALIFIED GROUT MEETING THE SECTION TESTING AND ACCEPTANCE (B) PRE–QUALIFICATION TESTING IS USED OR A MINIMUM OF 24 HOURS FOR ALL OTHER GROUTS UNLESS APPROVED BY THE ENGINEER. DO NOT OPEN INLETS, OUTLETS, OR VENTS UNTIL GROUT HAS SET. BEFORE PROTECTION OF END ANCHORAGES IS STARTED, REMOVE ALL MATERIALS USED FOR SEALING THE GROUT CAP CONNECTIONS. AT ANCHORAGES, PLUG ALL INLETS AND OUTLETS WITH PLASTIC OR STAINLESS STEEL THREADED CAPS. REPAIR ANY SPLITS, HOLES, OR OTHER DAMAGE TO EXPOSED DUCTS.

INSPECT THE LEVEL OF GROUT IN THE OUTLETS AND GROUT CAPS AND TOP OFF AS NECESSARY WITH FRESH GROUT AFTER 24 HOURS FROM THE FINISH OF GROUTING. FILL ANY VOIDS IMMEDIATELY WITH FRESH GROUT. USE VACUUM GROUTING PROCEDURES IF REQUIRED BY THE ASBI–CERTIFIED INSPECTOR AND AS REQUIRED BY AASHTO, IF STRANDS ARE EXPOSED.

1. INTERNAL TENDONS. FOR INTERNAL TENDONS SUBJECTED TO AGGRESSIVE ENVIRONMENTS, REMOVE TUBING 1 IN. BELOW CONCRETE SURFACE, SEAL, AND FILL WITH COMPATIBLE CEMENTITOUS – BASED MATERIAL TO FLUSH WITH CONCRETE SURFACE.

2. EXTERNAL TENDONS. SEAL OUTLET AND INLET OPENINGS PERMANENTLY.

3. ANCHORAGES. PROTECT ANCHORAGES TO PERMANENTLY PREVENT ACCESS OF WATER OR OTHER AGGRESSIVE AGENTS. INSTALL A PERMANENT PLASTIC CAP OVER THE ANCHOR HEAD PRIOR TO GROUTING. LEAVE THIS CAP IN PLACE TO FORM PART OF THE PERMANENT PROTECTION FOR THE TENDON. FILL THE CONCRETE BLOCK–OUT WITH LOW PERMEABILITY CONCRETE OR GROUT. COAT EXPOSED GIRDER ENDS WITH APPROVED ELASTOMERIC SYSTEM HAVING THICKNESS OF 30 TO 45 MILS.

(K) RECORD OF GROUTING OPERATION

PROVIDE RECORDS OF GROUTING FOR REVIEW BY THE ENGINEER WITHIN 72 HOURS OF GROUTING. RECORD THE FOLLOWING INFORMATION:

- DATE GROUTED
- NUMBER OF DAYS FROM STRESSING TO GROUTING
- TYPE OF PREPACKAGED GROUT
- TENDON(S) GROUTED
- INJECTION END AND APPLIED GROUTING PRESSURE
- SUMMARY OF ANY PROBLEMS
- CORRECTIVE ACTION TAKEN
- MEASURE OF THE COMPLETE FILLING OF THE DUCT(S) ADJUSTED FOR THE GROUT DISPLACED BY THE PRESTRESSING STRANDS.
- GROUT LOT NUMBER
- GROUT MANUFACTURE DATE
- ASBI–CERTIFIED INSPECTOR PRESENT DURING OPERATION
- QUALITY CONTROL TEST VALUES
- RESULTS OF POST–GROUTING INSPECTION
- AMBIENT AND SUBSTRATE TEMPERATURES

(L) INSPECTION CRITERIA REQUIRED BY FHWA

NO EARLIER THAN 24 HOURS AFTER GROUTING, PROBE AND PICK THE GROUT WITHIN ANCHORAGE OUTLETS AND ALL HIGH POINT OUTLETS TO IDENTIFY THE PRESENCE OF SOFT GROUT. SOFT GROUT IS CONSIDERED ANY GROUT THAT IS UNHARDENED. IF SOFT GROUT IS FOUND CEASE ALL GROUTING OPERATIONS AND NOTIFY THE DEPARTMENT REPRESENTATIVE.

TABLE 3.4.1.1P–2 LOAD FACTORS AND LIVE LOAD VEHICLES FOR PRESTRESSED CONCRETE GIRDERS

	LOAD COMBINATION											
	STR 1	STR IP[8]	STR IA[8]	STR II	SERV I (P/S COMPR. CHK.)		SERV III (P/S TENSION CHK.)		SERV IIIA (M, @ 0.9 F_y CHK.)	SERV IIIB (PENN DOT-CRACKING CHK.)	FATIGUE I[1] (INFINITE)	DEFL[1]
					W/O PL	WITH PL	W/O PL	WITH PL				
γ_{DC}[2]	1.25, 0.90	1.25, 0.90	1.25, 0.90	1.25, 0.90	1.00	1.00	1.00	1.00	1.00	1.00	---	---
γ_{DW}[3]	1.50, 0.65	1.50, 0.65	1.50, 0.65	1.50, 0.65	1.00	1.00	1.00	1.00	1.00	1.00	---	---
γ_{LL}	1.75	1.35	1.35	1.35	1.00	0.80	0.80[4]	0.65[9]	1.00	1.00	1.50	1.00
γ_{PL}	---	1.75	---	---	---	1.00	---	1.00	---	---	---	---
$\gamma_{CR,SH}$	0.5	0.5	0.5	0.5	1.00	1.00	1.00	1.00	---	---	---	---
DESIGN LL VEH.[7]	PHL-93	PHL-93	PHL-93	PERMIT (P-82)	PHL-93		PHL-93		CONTROLLING PHL-93 OR P-82	CONTROLLING PHL-93 OR P-82	HS20-30	PENNDOT DEFL. TRK.
RATING VEHICLE	RATING APPLICABILITY: I = INVENORY, O = OPERATING											
PHL-93	I	I	O	---	I		I		O	---	---	---
P-82	---	---	---	O	---		---		O	---	---	---
ML-80	I	I	---	O	I		I		O	---	---	---
TK527	I	I	---	O	I		I		O	---	---	---
HS20	I	I	---	O	I		I		O	---	---	---
H20	I	I	---	O	I		I		O	---	---	---
SPEC. VEH.	I	I	---	O	I		I		O	---	---	---

NOTES:
1. A LOAD FACTOR OF UNITY IS APPLIED TO PERMANENT LOADS FOR THE FATIGUE AND DEFLECTION LIMIT STATE ONLY WHEN SPECIFIED
2. DC LOAD FACTOR ALSO USED FOR BARRIER LOADS
3. DW LOAD FACTOR ALSO USED FOR UTILITY LOADS
4. FOR RATING VEHICLES, THE LIVE LOAD FOR SERVICE III IS TO BE TAKEN AS 1.0 (γ = 0.8. FOR PHL–93 ONLY)
5. ALL LOADS APPLIED TO NON–COMPOSITE SECTION FOR NON–COMPSITE GIRDERS
6. LOAD COMBINATIONS FOR RATINGS ONLY
7. THIS ROW LISTS THE TYPICAL DESIGN VEHICLE TO BE USED FOR EACH LOAD COMBINATION
8. THE REDUCED LOAD FACTOR FOR LL WITH PL (SEE D3.4.1)
9. FOR RATING VEHICLES (OTHER THAN PHL–93), THE LIVE LOAD FACTOR FOR SERVICE III IS TO BE TAKEN AS 0.80 FOR THE PEDESTRIAN LOAD CASE

PERMANENT LOADS FOR GIRDER PROGRAMS			SECTION PROPERTIES[5]
LOAD	P/S		P/S
DC1	YGIR	GIRDER	NC
	YSLAB	SLAB	NC
	YSLAB	HAUNCH	NC
	YID	INT. DIA .	NC
	YED	EXT. DIA.	NC
DC2	YDC2	BARRIER	N
DW	YFWS	FWS	N

SPAN NO.		BEAM TYPE AND SIZE					
		H 20	HS 20	ML-80	TK-527	PHL-93	P-82
INVERTORY RATING (IR)	DISTRIBUTION FACTOR	0.720	0.720	0.720	0.720	0.720	---
	LOCATION	CL	CL	CL	CL	CL	---
	LIMIT STATE	SERV III	SERV III	SERV III	SERV III	SERV III	---
	RATING FACTOR	1.39 M	1.19 M	1.07 M	1.02 M	1.04 M	
OPERATING RATING (OR)	DISTRIBUTION FACTOR	1.018	1.018	1.018	1.018	1.018	1.018
	LOCATION	0.05 L	0.45 L	0.45 L	0.45 L	0.35 L	0.25 L
	LIMIT STATE	STR II	STR II	STR II	STR II	STR IA	STR II
	RATING FACTOR	2.75 S	2.17 S	1.96 S	1.90 S	2.09 S	1.00 S

PENNDOT DRAWING 12–601–BDTD

5/1/2013

CORRECTIONS MADE BY BRIDGE DESIGN AND TECHNOLOGY DIVISION ON 10-31-13 ON THE GROUT REQUIREMENTS TO MEET STATE OF PRACTICE

COMMONWEALTH OF PENNSYLVANIA
REGISTERED PROFESSIONAL
C. BRIAN SLAGLE
ENGINEER
PE075107

CENTRAL ATLANTIC BRIDGE ASSOCIATES (CABA)

JANSSEN & SPAANS ENGINEERING
9120 HARRISON PARK COURT
INDIANAPOLIS, INDIANA 46216
Business (317) 254-9696 Fax (317) 258-8282

COMMONWEALTH OF PENNSYLVANIA
DEPARTMENT OF TRANSPORTATION

SPLICED PRESTRESSED CONCRETE GIRDER STANDARDS

GROUT SPECIFICATIONS

DATE: 8/11
SCALE: N/A
DWN: TAL CK'D: LS
JOB NO.
SHEET NO. 126

Time: 14:18:21
Date: 1/24/2013
Scale: 1=1(PS)
Drawing File: 996 - Standards for Spliced I-Girders\DWGS\BRIDGE\SHT-126.dwg (J-rose)

Product:

NEXT Beam - Precast Concrete Beam System
PennDOT Drawing # 09-602-BQAD, REV. 1

Approval Date:	**Initiated By SOL:**
August 1, 2013	483-13-10

Application/Use:

NEXT Beam is a Prestressed Concrete Beam developed by the Precast/Prestressed Concrete Institute Northeast and resembles a **"**Double Tee" beam that has been used in parking garage construction for decades and was previously approved as New Product Item No. 47. This beam type was approved by the committee on Feb. 7, 2008. As such, PennDOT is continuing the use of the NEXT Beam for use as an "as-designed", "Design Build" or "alternate" bridge beam. Revision No.1 includes additional reinforcement in the top slab region between the two stems of the beam to address minor cracking.

NEXT Beam is limited to the following applications as prototype installations are completed:

- Maximum span length: 80 feet
- Maximum T-Beam width: 12 feet (or as confirmed by PSLRFD)
- Minimum skew angle: 60 degrees, parallel skews only
- Horizontal alignment: Tangent sections, no super-elevation

The NEXT Beam must be designed/analyzed using Version 2.7.0.0 (or later) of PennDOT's Prestressed Concrete Girder Design and Rating computer program, PSLRFD. Contact the Bridge Design and Technology Division for design analysis enquiries.

Specifications:

The beam is to be fabricated and constructed per Publication 408 Sections 1107 and 1080.

Standard Drawing:

Attached is a copy of the Standard Detail Drawing # 09-602-BQAD, REV. 1.

Comments:
FHWA approval has been secured for NEXT Beam.
Code as structure type in BMS2 (6A26 – 6A29) as 42203: Prestressed simple composite concrete T-beam (multiple) structure type.

PLOTTED: 29-APR-2013 10:53
D-9002 CADD (02-90) REVISED (10-04)
OPERATOR:
FILE NAME: G:\rdl\Bridge stuff\09-602-BQAD NEXT BEAM.dgn

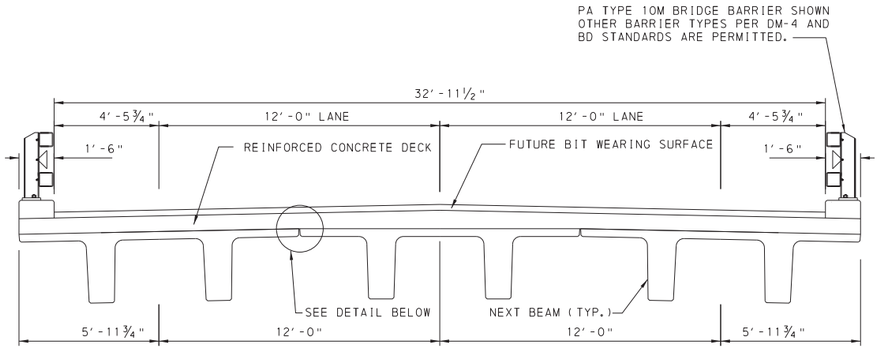

TYPICAL BRIDGE SECTION WITH MAXIMUM WIDTH BEAMS

(NEXT 36"x144" SHOWN)

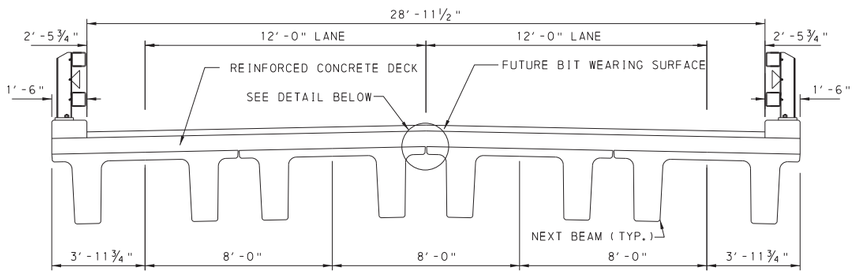

TYPICAL BRIDGE SECTION WITH MAXIMUM WIDTH BEAMS

(NEXT 36"x96" SHOWN)

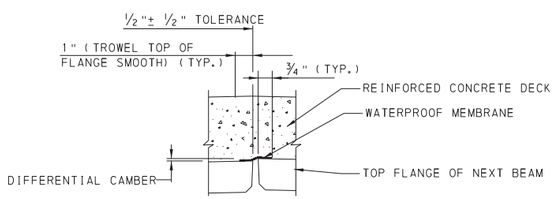

GAP FORM DETAIL

NOTE:
THE TWO BRIDGE SECTIONS DEPICTED REPRESENT THE TYPICAL USE OF THE MINIMUM WIDTH AND MAXIMUM WIDTH NEXT BEAMS.

MAR 30 2010

PENNSYLVANIA
DEPARTMENT OF TRANSPORTATION
RECOMMENDED
Thomas P Macioce
CHIEF BRIDGE ENGINEER

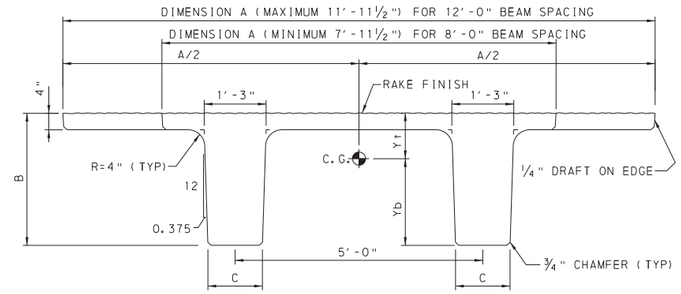

NEXT BEAM - SECTION PROPERTIES										
BEAM DESIGNATION	BEAM WIDTH INCHES	BEAM DEPTH INCHES	BASE STEM WIDTH INCHES	AREA IN^2	I IN^4	Yb INCHES	Yt INCHES	St IN^3	Sb IN^3	WEIGHT PLF
	A	B	C			D	E			
MINIMUM WIDTH BEAMS										
NEXT 36 F	95.50	36.00	13.00	1287	160240	21.77	14.23	11261	7361	1341
NEXT 32 F	95.50	32.00	13.25	1182	115813	19.51	12.49	9272	5936	1231
NEXT 28 F	95.50	28.00	13.50	1075	79901	17.24	10.76	7426	4635	1120
NEXT 24 F	95.50	24.00	13.75	966	51823	14.95	9.05	5726	3466	1006
MAXIMUM WIDTH BEAMS										
NEXT 36 F	143.50	36.00	13.00	1479	185525	23.36	12.64	14678	7942	1541
NEXT 32 F	143.50	32.00	13.25	1374	134258	20.98	11.02	12183	6399	1431
NEXT 28 F	143.50	28.00	13.50	1267	92661	18.57	9.43	9826	4990	1320
NEXT 24 F	143.50	24.00	13.75	1158	60045	16.12	7.88	7620	3725	1206

NOTES:
1. THE WIDTH OF BEAMS SHOWN ARE THE MINIMUM AND MAXIMUM WIDTH BEAMS. VARIATION BETWEEN THESE LIMITS IS ALLOWED IN ORDER TO CONSTRUCT A BRIDGE TO THE REQUIRED WIDTH. THE VARIATION IN WIDTH IS ACCOMPLISHED BY VARYING THE OVERHANG DIMENSIONS. THE DESIGNER WILL NEED TO CALCULATE BEAM PROPERTIES FOR BEAMS THAT ARE NOT EQUAL TO THE WIDTHS LISTED.
2. THE ACTUAL WIDTH OF THE BEAM TAKE INTO ACCOUNT A NOMINAL ½" WIDE GAP BETWEEN BEAMS TO ACCOUNT FOR TOLERANCES. THE SPACING OF BEAMS ON A TYPICAL BRIDGE SHALL BE AT THE NOMINAL SPACING (EX.: BEAM SPACING = 12 FEET FOR THE 11'-11½" SECTION).
3. THE STEM WIDTH AND SPACING ARE FIXED.
4. THE ENDS OF THE BEAMS SHOULD BE SKEWED FOR SKEWED BRIDGES. THE ACUTE CORNERS OF THE FLANGE OVERHANGS SHOULD BE CHAMFERED 6"x6" IN ORDER TO MINIMIZE CASTING AND HANDLING DAMAGE.
5. DECK SLAB OVERHANG MUST BE DESIGNED TO HANDLE STANDARD IMPACT LOADS.

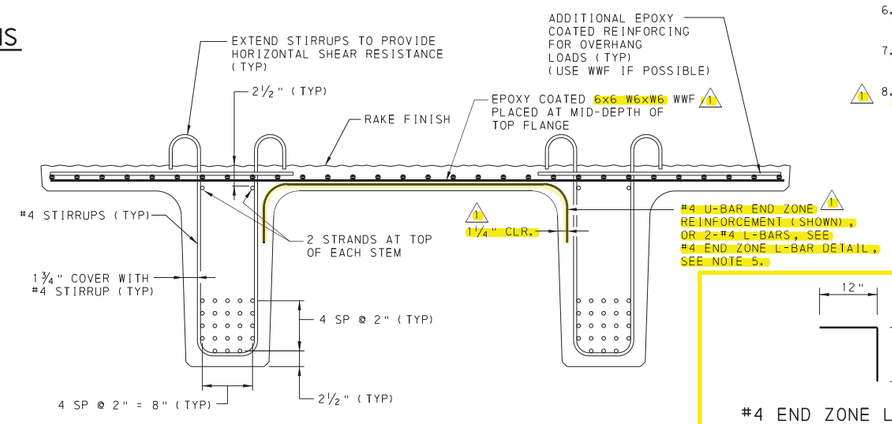

#4 END ZONE L-BAR 1
1 EA. INSIDE CORNER OF BEAM, 2 REQ'D.

TYPICAL BEAM REINFORCING

NOTES:
1. THE TOP FLANGE IS INTENDED TO ACT AS A DECK FORM ONLY. A REINFORCED CAST-IN-PLACE CONCRETE DECK SHOULD BE DESIGNED TO SPAN BETWEEN STEMS. THE WELDED WIRE FABRIC SHOWN IS USED TO SUPPORT THE WET DECK CONCRETE ONLY.
2. THE ADDITIONAL TOP STEEL IN THE BEAM OVERHANGS SHOULD ONLY BE USED WHERE THE WELDED WIRE FABRIC CANNOT SUPPORT THE OVERHANG LOADS.
3. SHEAR REINFORCING SHOULD BE KEPT TO #4 BARS IN ORDER TO MAXIMIZE THE COVER ON THE SIDE OF THE STEM.
4. UTILITIES MAY BE PLACED BETWEEN THE BEAM STEMS OR BETWEEN ADJACENT BEAMS. IT IS PREFERABLE TO INSTALL CAST-IN-PLACE INSERTS OR THROUGH BOLTS FOR UTILITY SUPPORT ON THE UNDERSIDE OF THE TOP FLANGE.
1 5. PLACE 14-#4 U-BARS (OR 14 PAIRS OF #4 L-BARS) @ 6" AT THE BEAM END IN THE TOP FLANGE TO MINIMIZE THE POTENTIAL FOR TOP FLANGE END CRACKING DURING RELEASE AND HANDLING. THE MOST COMMON FORM OF POTENTIAL CRACKING IN THIS AREA IS A SERIES OF VERTICAL HAIRLINE CRACKS THROUGH THE INSIDE RADIUS OF THE TOP FLANGE / BEAM STEM INTERFACE RUNNING PARALLEL TO THE STEM.

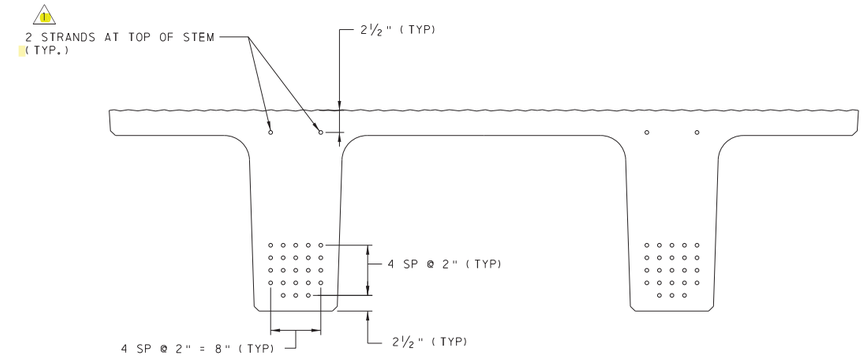

TYPICAL STRAND LOCATIONS

(ENDS AND ALONG THE SPAN)

NOTES:
1. DRAPED STRANDS ARE NOT PERMITTED.
2. DEBONDING OF STRAND IS ALLOWED. NO MORE THAN 25% OF THE TOTAL NUMBER OF STRANDS SHALL BE DEBONDED. THE SPACING BETWEEN DEBONDED STRANDS SHALL BE AT LEAST 2.5 INCHES IN ANY DIRECTION. THE RESTRICTIONS OUTLINED IN THE AASHTO DESIGN SPECIFICATIONS AND PENNDOT DESIGN MANUAL, PART 4, SHALL ALSO BE FOLLOWED.
3. IT IS RECOMMNEDED THAT APPROXIMATELY 50% OF ALL STRAND BE DEBONDED FOR THE FIRST 6" FROM THE END OF THE BEAM IN ORDER TO CONTROL END CRACKING. SPACING RESTRICTIONS OUTLINED IN NOTE 2 DO NOT APPLY TO THIS 6" AREA, BUT DO APPLY BEYOND THIS 6" AREA.
4. STRANDS SHALL BE PLACED WITHIN THE 2"x2" GRID. THE NUMBER AND LOCATION OF STRANDS SHALL BE AS REQUIRED BY DESIGN.
5. THE PATTERN SHOWN DEPICTS THE MAXIMUM NUMBER OF STRANDS ALLOWED. THIS IS BASED ON THE CAPACITY OF TYPICAL CASTING BEDS.
6. THE TWO BOTTOM CORNER STRAND IN EACH STEM ARE OMITTED TO PROVIDE ROOM FOR THE SHEAR REINFORCEMENT BAR BENDS.
7. ALL PRESTRESSING STRAND SHALL BE ½" DIA. SPECIAL UNCOATED SEVEN WIRE, LOW RELAXATION STRANDS CONFORMING TO AASHTO M203. THE ULTIMATE STRENGTH OF THE STRANDS SHALL BE 270 KSI.
1 8. FOUR ADDITIONAL STRANDS AS SHOWN AT TOP OF STEMS TENSIONED AS REQUIRED BY DESIGN, ALSO SUPPORTS THE TOP FLANGE REINFORCING.

1	ADDED #4 U-BARS	TAS	RSW	TPM	5/9/13
Mark	Description	By	Chk'd.	Recm'd.	Date
REVISIONS					

PENNDOT DRAWING NO. 09-602-BQAD, REV. 1

COMMONWEALTH OF PENNSYLVANIA
DEPARTMENT OF TRANSPORTATION

NEXT BEAM
PRECAST CONCRETE BRIDGE BEAM SYSTEM

NEXT FORM BEAM
TYPICAL DETAILS

SHEET 1 OF 2

BD-601M	CONCRETE DECK SLAB
BD-617M	PA TYPE 10M BRIDGE BARRIER
BD-628M	BRIDGE APPROACH SLABS
BD-667M	INTEGRAL ABUTMENT
BC-775M	PA BRIDGE BARRIER MISCELLANEOUS DETAILS

REFERENCE DRAWINGS

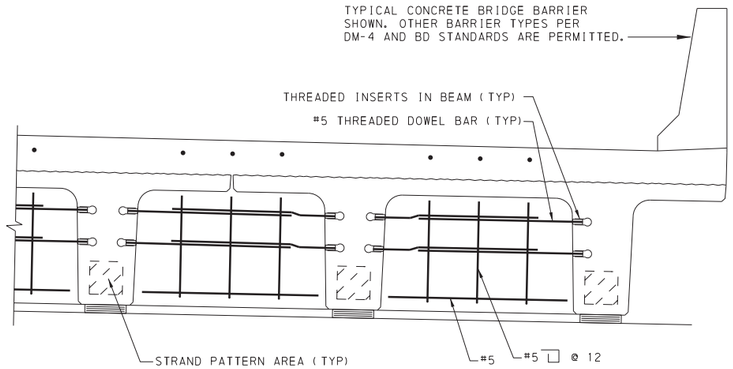

BRIDGE SECTION AT ENDS

TYPICAL BRIDGE SECTION WITH MAXIMUM WIDTH BEAMS

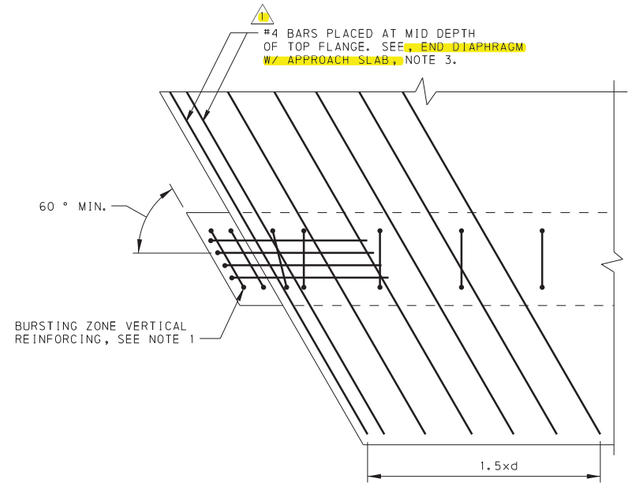

PLAN - SKEWED END

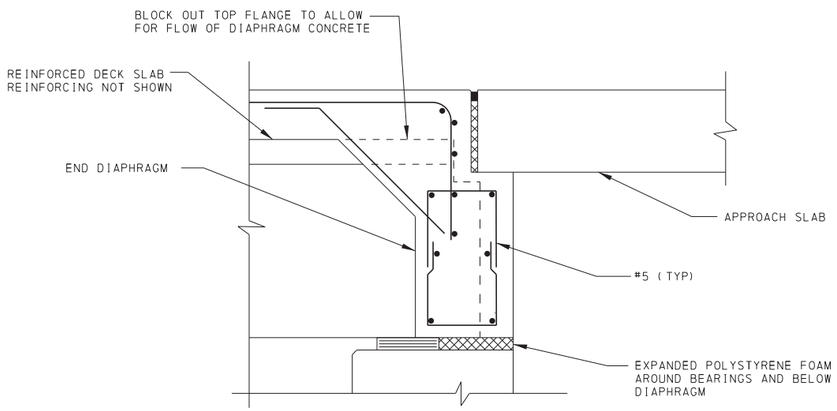

SECTION THROUGH DIAPHRAGM

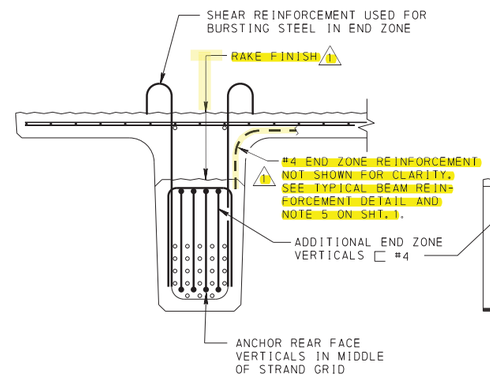

END ELEVATION - STEM END

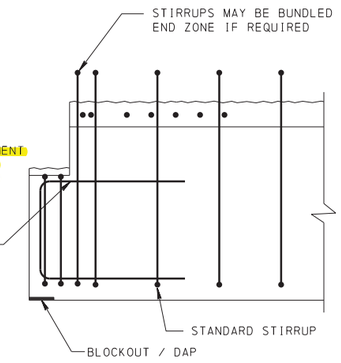

ELEVATION - STEM END

END DIAPHRAGM DETAIL W/ APPROACH SLAB

NOTES:

1. THE INSERTS FOR THE THREADED DOWELS IN THE STEMS SHALL BE PLACED SO THAT THEY DO NOT INTERFERE WITH THE PRESTRESSING STRAND PATTERN AND ARE LOCATED A MINIMUM OF 8" FROM THE ENDS OF THE BEAMS.
2. INTERMEDIATE DIAPHRAGMS ARE NOT REQUIRED.
3. IF THE TOP FLANGE IS BLOCKED OUT AS SHOWN, IT IS RECOMMENDED THAT UP TO 50% OF THE STRANDS BE DEBONDED OVER THE SAME LENGTH TO MINIMIZE CRACKING AT RELEASE.
4. EXTEND EXTERIOR T-BEAM WEBS TO FULL WIDTH OF ABUTMENT.
5. INTEGRAL ABUTMENT DETAIL(S) OF BD-667M ARE PERMITTED TO BE USED ON NEXT BEAM BRIDGES.
6. ALTERNATE END DIAPHRAGM WITHOUT PAVING NOTCH AND WITH CORBEL ON ABUTMENT IS PERMITTED AS SHOWN ON BD-628M, SHT. 18.

BEAM END REINFORCEMENT DETAILS

NOTES:

1. THE BARS SHOWN ARE APPROXIMATELY THE MAXIMUM NUMBER THAT CAN BE FIT WITHIN THE NEXT 24 BEAM. SOME OR ALL OF THESE ADDITIONAL END VERTICAL BARS MAY NOT BE NECESSARY DEPENDING ON THE DESIGN.
2. THE AMOUNT OF SPLITTING REINFORCING MAY BE REDUCED BY DEBONDING STRAND IN THIS AREA. ADDITIONAL SPLITTING REINFORCING SHOULD BE PLACED IN AREAS WHERE DEBONDING IS TERMINATED.

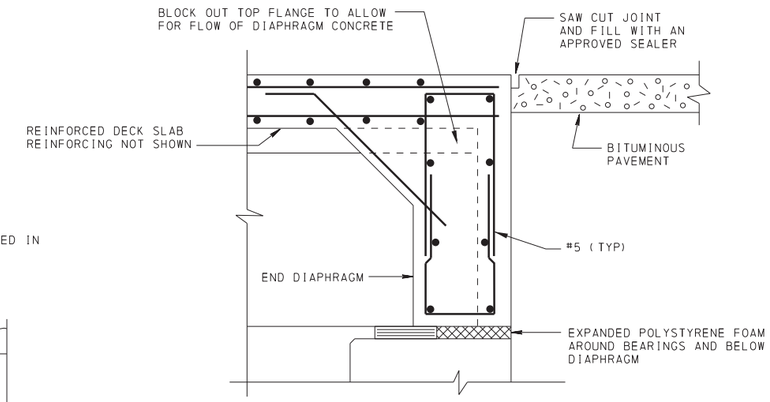

SECTION THROUGH DIAPHRAGM

END DIAPHRAGM DETAIL W/O APPROACH SLAB

Mark	Description	By	Chk'd.	Recm'd.	Date
1	ADDED #4 U-BARS	TAS	RSW	TPM	5/9/13

REVISIONS

PENNDOT DRAWING NO. 09-602-BQAD, REV. 1

COMMONWEALTH OF PENNSYLVANIA
DEPARTMENT OF TRANSPORTATION

NEXT BEAM
PRECAST CONCRETE BRIDGE BEAM SYSTEM

NEXT FORM BEAM
TYPICAL DETAILS

SHEET 2 OF 2

D-9002 CADD (02-90) REVISED (10-04) PLOTTED: 29-APR-2013 10:53
OPERATOR:
FILE NAME: G:\rdl\Bridge stuff\09-602-BQAD NEXT BEAM.dgn

Product:

Strip Seal Expansion Joint Retainers
The D. S. Brown Co., Inc.
PADOT DWG. # 96-195/196 PE (Revision 1)

Approval Date:

August 1, 2013

Initiated By SOL:

483-13-10

Application/Use:

Strip seal retainers are to be used on Department's bridge deck rehabilitation projects.

Specifications:

None.

Standard Drawings:

Attached is the Standard Detail Drawings PADOT DWG. #96-195/196 PE (Revision 1).
The attached drawings are to be used as a reference in the review of shop drawings, and any variation therefrom will be cause for shop drawing disapproval.

Comment:

The manufacturer has been informed that the seals furnished with retainers must be compatible with the retainers and must provide a watertight joint. Installation of Elastromeric Concrete shall be in accordance with the manufacturer's procedures. However, installation using material other than Elastomeric Concrete shall be approved by the Engineer.

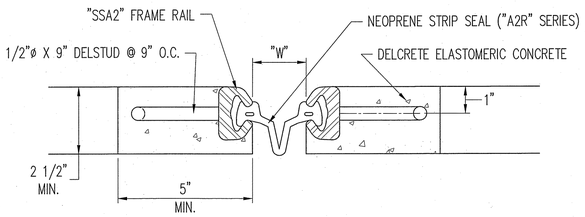

SECTION THRU JOINT

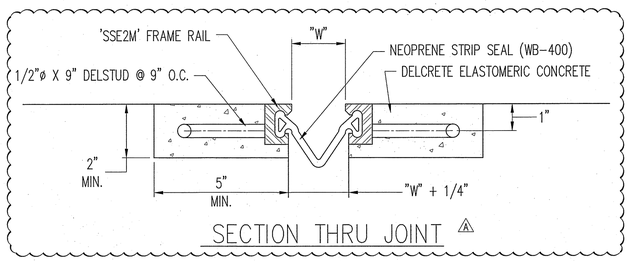

SECTION THRU JOINT △3

INSTALLATION DIMENSION 'W' AT VARIOUS TEMPERATURES													
TEMPERATURE °F													
LOCATION	-10°	0°	10°	20°	30°	40°	50°	60°	68°	70°	80°	90°	100°	110°

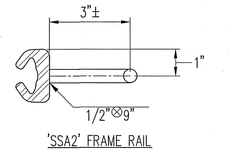

'SSA2' FRAME RAIL

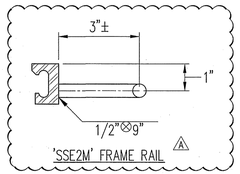

'SSE2M' FRAME RAIL △3

ANCHOR PLACEMENT

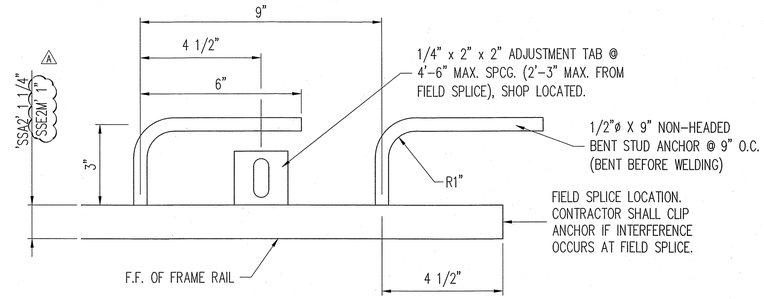

ANCHOR & TAB PLACEMENT

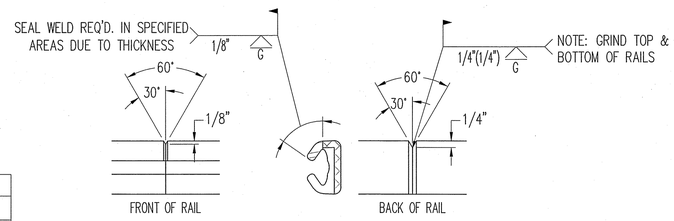

'SSA2' FIELD SPLICE

NOTE: KEEP RAIL CHANNEL FREE OF WELD SPLATTER

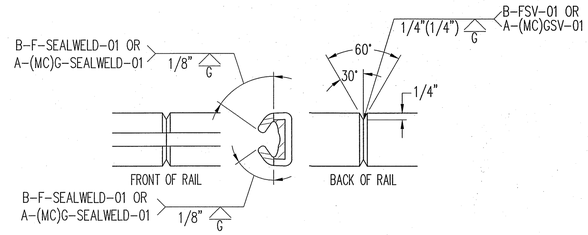

SSA2 SHOP SPLICE

SEAL WELD REQ'D IN SPECIFIED AREAS DUE TO THICKNESS.
NOTE: KEEP RAIL CHANNEL FREE OF WELD SPLATTER

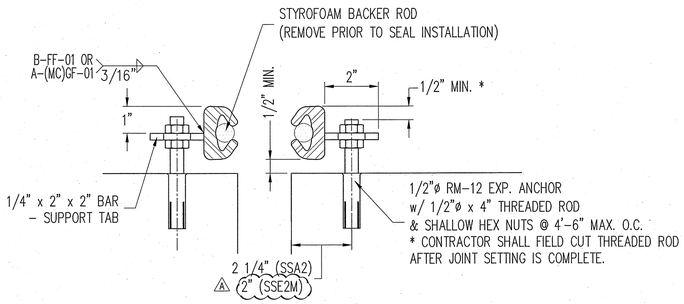

SUPPORT METHOD

'SSA2' SHOWN, 'SSE2M' SIMILAR EXCEPT WHERE NOTED

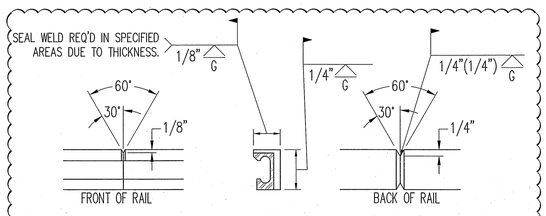

'SSE2M' FIELD SPLICE DETAIL △3

NOTE: KEEP RAIL CHANNEL FREE OF WELD SPLATTER

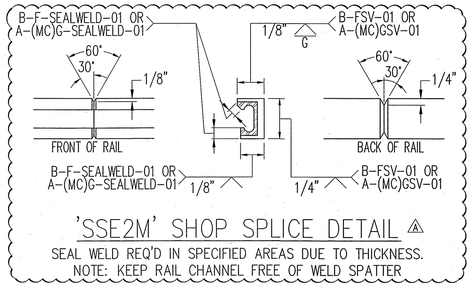

'SSE2M' SHOP SPLICE DETAIL △3

SEAL WELD REQ'D IN SPECIFIED AREAS DUE TO THICKNESS.
NOTE: KEEP RAIL CHANNEL FREE OF WELD SPATTER

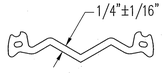

'A2R-400' STRIP SEAL

FOR EASE OF INSTALLATION OF THE STRIP SEAL DEVICE, THE D.S. BROWN CO. RECOMMENDS A MINIMUM "W" OF 2".

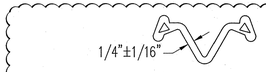

△3

'WB-400' SERIES STRIP SEAL

FOR EASE OF INSTALLATION OF THE STRIP SEAL DEVICE, THE D.S. BROWN CO. RECOMMENDS A MINIMUM "W" OF 2".

GENERAL NOTES

1. PROVIDE MATERIAL AND WORKMANSHIP IN ACCORDANCE WITH PUBLICATION 408.
2. THE CONTRACTOR SHALL VERIFY ALL DIMENSIONS TO ENSURE ACCURACY OF THE EXPANSION JOINT PRIOR TO FABRICATION.
3. NEOPRENE SEAL TO BE FIELD INSTALLED BY CONTRACTOR USING DELASTIBOND LUBRICANT/ADHESIVE.
4. NO WELD PERMITTED WHERE FRAME RAIL COMES IN CONTACT WITH NEOPRENE SEAL.
5. ALL WELDING SHALL BE IN ACCORDANCE WITH THE CURRENT STRUCTURAL WELDING CODE AWS D1.1 AND THE LATEST PREVISIONS AND AASHTO ADDENDUMS.
6. STEEL RAILS ARE AVAILABLE IN ASTM-A36 AND A-588.
7. MINIMUM WEIGHT
   - 7.1. SSA2 = 5.23 lbs./foot
   - △3 7.2. SSE2M = 3.13 lbs/foot
8. BLOCKOUT AND EXPANSION JOINT SHALL BE SANDBLASTED PRIOR TO INSTALLATION OF DELCRETE.
9. ALL STUDS SHALL BE ASTM-A496 AND ELECTRIC ARC END-WELDED w/ COMPLETE FUSION.
10. THE STRIP SEAL JOINT MAY BE USED FOR MOVEMENTS OF 4" OR LESS.
11. MAXIMUM LENGTH FOR STRIP SEAL ASSEMBLIES
    - 11.1. 22'-6" (SSA2)
    - △3 11.2. 20'-0" (SSE2M)
    - 11.3. FIELD SPLICES SHALL BE PLACED AT CROWN BREAKS AND TRANSVERSE BREAKS IN THE DECK.
12. NEOPRENE SEAL SHALL BE CONTINUOUS.
    - 12.1. FACTORY VULCANIZED HORIZONTAL MITERS SHALL BE REQUIRED ON SKEWS GREATER THAN 35°.
13. STRIP SEAL MATERIAL SHALL CONFORM TO SEC. 705.4(d) OF PUB. 408.
14. EXPANSION JOINTS TO BE SET TO GRADE BY ATTACHING THE JOINT TO THE EXPANSION ANCHORS.
15. CONTRACTOR TO FORM JOINT OPENING AS PRESCRIBED BY THE FIELD ENGINEER.
16. INSTRUCTIONS FOR PROPER INSTALLATION TO BE INCLUDED WITH THE EXPANSION JOINT SHIPMENT.
17. INSTALLATION OF ELASTOMERIC CONCRETE SHALL BE IN ACCORDANCE WITH THE MANUFACTURER'S PROCEDURES.
18. ELASTOMERIC CONCRETE SHALL BE OF URETHANE CHEMISTRY, NOT REQUIRE OUTSIDE APPLICATION OF HEAT FOR CURING PURPOSES, AND SHALL ACCEPT TRAFFIC NO LATER THAT (2) HOURS AFTER FINAL POUR.
19. MEASUREMENT AND PAYMENT SHALL BE IN ACCORDANCE WITH SEC. 1021.4 OF PUB. 408.

MARK	DESCRIPTION	BY	CHK'D	RECM'D	DATE
△3	ADD 'SSE2M' EXPANSION JOINT, REMOVE 'SSE2'	AB			07/2013

REVISIONS

PADOT DWG # 96-195/196PE (Revision 1)

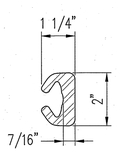

'SSA2' FRAME RAIL

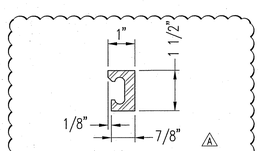

△3

'SSE2M' FRAME RAIL

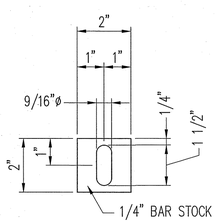

SUPPORT TAB

STRUCTURAL TEMPERATURE	'W'	
	'A2R-400'	'WB-400'
MAX.	1/2"	1/2"
MID.	2 1/2"	2 1/2"
MIN.	4 1/2"	4 1/2"

PENNSYLVANIA
DEPARTMENT OF TRANSPORTATION
RECOMMENDED

Thomas P Macioce

CHIEF BRIDGE ENGINEER

AUGUST 1, 2013

COMMONWEALTH OF PENNSYLVANIA
REGISTERED PROFESSIONAL
MARK R. KACZINSKI
ENGINEER
No. 037975-E

7-18-13

D.S. BROWN
A GIBRALTAR INDUSTRIES COMPANY

THE D.S. BROWN COMPANY
300 E. CHERRY STREET
NORTH BALTIMORE, OHIO 45872
419.257.3561
FAX: 419.257.0332
WWW.DSBROWN.COM

ITEM	QUANTITY
—	
—	
—	
—	
—	
—	
—	

DESCRIPTION:	SCALE:	DRAWN BY:	CHECKED BY:	DATE:
'SSA2' / 'SSE2M' STANDARD DETAILS STATE OF PENNSYLVANIA	N.T.S.	AB	–	06/26/13
	PROJECT NUMBER	PRODUCT CODE 1011	RELEASE 1	SHEET 1

Product:

Item 8620-0235 – Prefabricated Rett-Wall Retaining Wall System
J & R Slaw Inc.
PADOT Drawing # 2011-203 PE

Approval Date:	**Initiated By SOL:**
August 1, 2013	483-13-10

Application/Use:

Prefabricated Rett-Wall Retaining Wall System manufactured by J & R Slaw Inc., PA has been approved for use as an "As-designed" or "Alternate" retaining wall. The use as an "As-designed" or "Alternate" or retaining wall is at the discretion of the District Executive.

Prefabricated Rett-Wall Retaining Wall System's usage has the following restrictions:

- The minimum internal friction angle of the foundation soil is 34 degrees.
- Maximum Wall Height:

  40 feet for level backfill with traffic
  28 feet for 2H:1V infinite sloping backfill

This wall system meets both AASHTO and Design Manual, Part 4 design criteria.

Specifications:

Design/Material/Construction Specifications for this retaining wall system are specified on PADOT Drawing #2011-203 PE dated August 1, 2013 of Prefabricated Rett-Wall Retaining Wall System details for your use.

Comments:

On those projects permitting the use of this system as an alternate, a special provision should be included in the proposal to indicate that the "Prefabricated Rett-Wall Retaining Wall System" as an alternate is allowed.
The contractor will be required to revise the pertinent contract drawings as per DM-4, PP 1.10 to show the usage of "Prefabricated Rett-Wall Retaining Wall System" and will also be required to reimburse the Department a fee of $1000 per design for the review and approval of the revision. This should be specified in the contract's Special Provisions.

RETT-WALL RETAINING WALL SYSTEM

TABLE OF CONTENTS

1. COVER
2. NOTES
3. NOTES CONT.
4. SECTIONS AND DETAILS
5. SECTIONS AND DETAILS II
6. TYPICAL UNIT DETAILS (6'–0" THRU 31'–0")
7. TYPICAL UNIT INFORMATION TABLE
8. MOMENT SLAB DETAILS
9. TYPICAL HALF HEIGHT PANEL
10. CORNER UNIT DETAILS
11. SLOPED FACE 6' STEM
12. SLOPED FACE 8' STEM

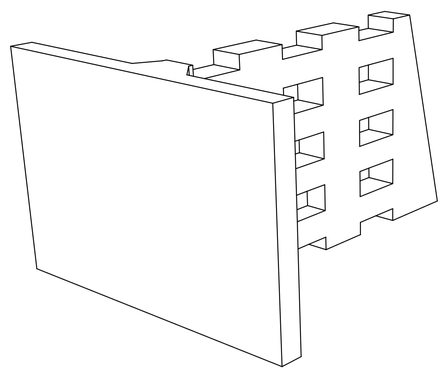

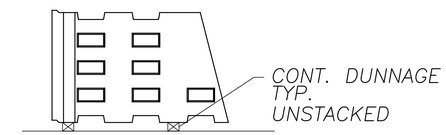

STORAGE / DUNNAGE

REVISION	DATE	DESCRIPTION
6	07/29/2013	GENERAL
5	07/19/2013	GENERAL
4	05/31/2013	GENERAL
3	11/21/2012	GENERAL
2	4/9/2012	GENERAL
1	1/6/2012	GENERAL

DESIGN NOTES:

1. TWO TYPICAL PRE–APPROVED WALL CONFIGURATIONS (REFER TO DRAWING SHEET NO. 5) SHOWN ARE DESIGNED USING THE AASHTO LRFD AND PENNSYLVANIA DEPARTMENT OF TRANSPORTATION DESIGN MANUAL PART 4. THE PRE–APPROVED RETAINING WALL SECTIONS ARE BASED ON THE FOLLOWING LOAD DESIGN CRITERIA:
   - 1.1. THE DENSITY OF THE BACKFILL CONTAINED WITHIN THE UNITS NEEDS TO BE BETWEEN 90 PCF AND 120 PCF.
   - 1.2. ONLY SECTIONS WITH LEVEL BACKFILL INCLUDES A 3–FEET LIVE LOAD SURCHARGE
   - 1.3. THE DESIGN FOR RETT WALL WITH TRAFFIC BARRIER AND MOMENT SLAB SYSTEM. INCLUDES A 0.5 KLF HORIZONTAL LOAD TO THE BARRIER FOR A VEHICLE COLLISION FORCE, AS APPLICABLE.
   - 1.4. THE DESIGN FOR SLOPED BACKFILL INCLUDES A 2H:1V BACKFILL SLOPE (MAX).
2. THESE TWO TYPICAL RETT WALL SYSTEM CONFIGURATIONS ARE PRE–APPROVED FOR USE ON DEPARTMENT PROJECTS. THE WALL DESIGN MAY BE BASED ON THESE DRAWINGS BY:
   - 2.1. SELECTING THE NUMBER OF 4' HIGH WALL UNITS NEEDED BASED ON THE OVERALL WALL HEIGHT AND CORRESPONDING STEM LENGTHS AS SHOWN ON TYPICAL SECTIONS.
   - 2.2. CONFIRMING THAT THE LRFD FACTORED BEARING RESISTANCE (PER DM–4) BASED ON GEOTECHNICAL INVESTIGATION, IS MORE THAN THE FACTORED BEARING PRESSURE SHOWN IN TABLE–1.
3. FOR PROJECTS WITH DESIGN CONDITIONS NOT COVERED BY THIS SET OF PRE–APPROVED TYPICAL WALL CONFIGURATIONS, THE RETT WALL DESIGNATED AREA DESIGN ENGINEERING REPRESENTATIVE, J&R SLAW, MUST SUBMIT A COMPLETE SET OF SIGNED AND SEALED DESIGN COMPUTATIONS, INCLUDING THE GEOTECHNICAL REPORT, AND SIGNED AND SEALED DRAWINGS TO THE DISTRICT BRIDGE ENGINEER FOR REVIEW AND ACCEPTANCE.

PENNSYLVANIA
DEPARTMENT OF TRANSPORTATION
RECOMMENDED

Thomas P Macioce

CHIEF BRIDGE ENGINEER

AUGUST 1, 2013

COMMONWEALTH OF PENNSYLVANIA
REGISTERED PROFESSIONAL
DAVID W. TIEGS
ENGINEER
PE074978

7/29/13

I CERTIFY ALL ASSUMPTIONS MADE IN DESIGNING THIS WALL HAVE BEEN VALIDATED THROUGH CONSTRUCTION DETAILS SPECIAL NOTES AND/OR INSTRUCTIONS TO THE FABRICATOR, ERECTOR AND CONTRACTOR

PADOT DRAWING 2011-203 PE

COMMENWEALTH OF PENNSYLVANIA
DEPARTMENT OF TRANSPORTATION
BUREAU OF PROJECT DELIVERY

RETT WALL STANDARDS
PREFABRICATED RETAINING WALL SYSTEM

J & R SLAW INC.

438 RIVERVIEW RD.,LEHIGHTON, PA 18235 PHONE (610) 852–2020 FAX (610) 852–2098

DESIGNED BY:	SCALE: nts	REV. :
DRAWN BY: JDK	DATE: 03–22–11	SHEET NO.: 1 OF 12

DESIGN SPECIFICATIONS FOR PRECAST RETT WALL (PANELS) MANUFACTURED BY J&R SLAW INC

1. GENERAL:
   1.1. J & R SLAW, TAKES FULL RESPONSIBILITY OF ENGINEERING THEORY AND CALCULATION CORRECTNESS AND ENSURING THAT ALL DESIGN ASSUMPTIONS ARE VALIDATED IN THE CONTRACT DOCUMENTS EITHER BY NEEDED DETAILS OR CONSTRUCTION SPECIFICATIONS.
   1.2. SECURE DISTRICT BRIDGE ENGINEER AND GEOTECHNICAL ENGINEER'S APPROVAL BEFORE INCORPORATING THE RETT RETAINING WALL SYSTEM IN ANY PROJECT.
   1.3. J&R SLAW WILL SUPPLY SHOP DRAWINGS FOR PRECAST RETT WALL PANELS IN ACCORDANCE WITH THE PUBLICATION 408. DESIGN PROCEDURES OR PERMISSIBLE VARIATIONS OTHER THAN THOSE CONTAINED HEREIN ARE NOT PERMITTED UNLESS PRE-APPROVED BY THE CHIEF BRIDGE ENGINEER. PROVIDE SHOP DRAWINGS IN ACCORDANCE WITH SECTION 105.02(D) OF PUBLICATION 408.
   1.4. J&R SLAW IS TO PREPARE DESIGN CALCULATIONS AND CONTRACT DRAWINGS FOR THE RETT RETAINING WALL SYSTEM IN ACCORDANCE WITH THE GUIDELINES SPECIFIED HEREIN. THE RETT WALL DESIGN PARAMETERS AND OTHER LIMITATIONS ARE AS PER MANUFACTURERS DESIGN SPECIFICATIONS PREPARED BY J&R SLAW 438 RIVERVIEW RD, LEHIGHTON, PA AND DESIGN MANUAL 4.

2. ON THE FIRST SHEET OF THE DESIGN SHOW A PROFESSIONAL ENGINEER'S SEAL (LICENSED IN PENNSYLVANIA), SIGNATURE AND DATE SIGNED.

3. IN THE EVENT THAT CERTAIN DESIGN PARAMETERS, STRESSES OR SPECIFICATIONS ARE IN CONFLICT, THE FOLLOWING ORDER OF PREDOMINANCE GOVERNS:

   3.1. DESIGN REQUIREMENTS LISTED IN "SPECIAL DRAWINGS AND SPECIAL DESIGN REQUIREMENTS: (PART B) OF THE SPECIAL PROVISIONS.
   3.2. PA DOT DESIGN STANDARDS.
   3.3. PA DOT DESIGN MANUAL, PART 4 (STRUCTURES).
   3.4. AASHTO LRFD BRIDGE DESIGN 5TH EDITION 2010.
   3.5. AASHTO GUIDE SPECIFICATIONS FOR STRUCTURAL DESIGN OF SOUND BARRIERS, 1989 (EXCEPT INCREASE IN STRESSES DUE TO WIND LOAD IS NOT PERMITTED).
   3.6. IN THE EVENT THAT A CLEAR ORDER OF PREDOMINANCE CANNOT BE ESTABLISHED OR A DIFFERENCE IN THE INTERPRETATION OF THE DESIGN CANNOT BE RESOLVED, THE CHIEF BRIDGE ENGINEER IS THE ARBITER, AND HIS DECISION IS TO BE FINAL.

4. THE FOLLOWING INFORMATION MUST BE SHOWN ON THE SHOP DRAWINGS:

   4.1. GENERAL NOTES AND FABRICATION NOTES
   4.2. TRANSPORTATION AND LIFTING AND ERECTION NOTES
   4.3. INSTALLATION NOTES

   4.4. ELEVATION VIEW INDICATING THE FOLLOWING MINIMUM INFORMATION:
   4.4.1. OVERALL WALL LENGTH AND TOP AND BOTTOM OF WALL ELEVATIONS
   4.4.2. UNIT DESIGNATIONS
   4.4.3. FINISHED GROUND ELEVATIONS AS WELL AS ROADWAY GRADE.

   4.5. INDIVIDUAL UNIT DETAILS:
   4.5.1. UNIT TYPE, UNIT DIMENSIONS AND REINFORCEMENT DETAILS
   4.5.2. MATERIAL LISTS, LIFTING INSERT DETAILS
   4.5.3. REINFORCEMENT BAR SCHEDULES
   4.5.4. ANY OTHER INFORMATION REQUIRED TO FABRICATE AND CONSTRUCT THE RETT WALL

5. PROVIDE OPENINGS OR OTHER ACCESS AS INDICATED, SPECIFIED OR DIRECTED. PROVIDE ADEQUATE REINFORCEMENT OR FRAMES AROUND OPENINGS TO PRECLUDE CRACKING. SHOW REINFORCEMENT OR FRAME DETAILS ON THE SUBMITTAL DRAWINGS.

6. DO NOT CHANGE BOTTOM OF FOOTING ELEVATION UNLESS AUTHORIZED BY THE DISTRICT BRIDGE ENGINEER/DISTRICT GEOTECHNICAL (SOILS) ENGINEER.

7. PLACE BOTTOM OF THE FOOTING AT A MINIMUM DEPTH EQUAL TO PREVAILING FROST DEPTHS OR SCOUR DEPTHS BUT NOT LESS THAN 3'0" BELOW GROUND ELEVATION UNLESS CONSTRUCTED ON ROCK FOUNDATIONS OR OTHERWISE INDICATED.

8. UNIT GEOMETRY AND REINFORCING IS BASED ON THE FOLLOWING:
   8.1. LIVE LOAD: SURCHARGE 360 PSF.
   8.2. MAX. WALL HEIGHT WITH LEVEL BACK FILL = 40'-0"
   8.3. MAX. WALL HEIGHT WITH 2H:1V SLOPED BACKFILL = 28'-0"
   8.4. BATTER: 0 DEG.
   8.5. UNIT WIDTH: 6'-0"
   8.6. UNIT HEIGHT: 4'-0"
   8.7. FACE & STEM THICKNESS.: 0'-6"

9. FOR WALLS CONSTRUCTED ALONG RIVERS OR STREAMS, EMBEDMENT DEPTHS SHALL BE ESTABLISHED AT A MINIMUM OF 2'-0" BELOW POTENTIAL SCOUR DEPTH A DIFFERENTIAL HYDROSTATIC PRESSURE SHALL BE CONSIDERED PER DM-4.

FOR SOIL PROPERTIES AND ASSUMPTIONS, SEE CALCULATIONS

RETT-WALL GENERAL NOTES:

1. MATERIAL

   1.1. PRECAST RETT-WALL UNITS AND SHEAR KEYS: FABRICATE PRECAST CONCRETE UNITS IN ACCORDANCE WITH PUB.- 408 SECTION 714 AND THE CONTRACT SPECIAL PROVISIONS.
   1.1.1. PROVIDE CONCRETE FOR CASTING THE WALL UNITS AND SHEAR KEYS WITH A 28-DAY MINIMUM COMPRESSIVE STRENGTH OF 5000 PSI.STRUCTURAL CONCRETE PORTION SHALL HAVE F'C = 5,000 PSI (35 MPA) AT 28 DAYS. STRIPPING = 4000 PSI.
   1.1.2. CIP CONCRETE PORTION SHALL BE AA AND AS PER THE APPROVED MIX DESIGN.

   1.2. REINFORCEMENT
   1.2.1. REBAR - ASTM A 615, GRADE 60, IN ACCORDANCE WITH SECTION 709.1.
   1.2.2. MESH -WELDED WIRE FABRIC (WWF) REINFORCEMENT SHALL MEET THE REQUIREMENTS OF ASTM A-185, GRADE 65.
   1.2.3. PROVIDE EPOXY COATED OR GALVANIZED AS PER PUB.-408.
   1.2.4. WWF GRADE 65 OR REBAR GRADE 60 MAY BE CONVERTED AT AN EQUIVALENT AREA.

   1.3. JOINT MATERIALS:
   1.3.1. NO FILLER IS REQUIRED IN THE VERTICAL JOINTS.
   1.3.2. PROVIDE ½" THICK HDPE BEARING PADS FOR THE HORIZONTAL JOINTS AS INDICATED. COVER ALL JOINTS ON THE BACKSIDE OF THE WALL WITH GEOTEXTILE FABRIC MEETING THE REQUIREMENTS OF PUB 408 SECTION 735, CLASS 4, TYPE A.

   1.4. GRANULAR FILL - BETWEEN WALL STEMS
   1.4.1. PROVIDE CRUSHED OR NATURAL SAND, CRUSHED OR UNCRUSHED GRAVEL, BLASTED LIMESTONE, BLASTED SANDSTONE, OR ANY STANDARD SIZE COARSE AGGREGATE MEETING THE FOLLOWING GRADATION AS DETERMINED IN ACCORDANCE WITH PTM 616.

Sieve Size	Percent Passing
3 inches	100
3/4 inch	20-100
No. 40	0-60
No. 200	0-10*

   *DETERMINATION OF THE FINES CONTENT (MINUS NO. 200 SIEVE MATERIAL) MUST BE DETERMINED BY WASH TEST ACCORDING TO PTM NO. 100, AMOUNT OF MATERIAL FINER THAN NO. 200 SIEVE IN AGGREGATE. THIS IS IN ADDITION TO PTM NO. 616, SIEVE ANALYSIS OF COARSE AND FINE AGGREGATE.

   1.4.2. HAVE THE BACKFILL CONFORM TO ALL OF THE FOLLOWING ADDITIONAL REQUIREMENTS:
   1.4.2.1. FURNISH MATERIALS MEETING THE QUALITY REQUIREMENTS OF TYPE C COARSE AGGREGATE OR BETTER AS SPECIFIED IN SECTION 703.2(A), TABLE B EXCEPT FURNISH MATERIALS FREE OF CLAY LUMPS, FRIABLE PARTICLES, COAL AND COKE. DO NOT USE METALLURGICAL SLAG OR CINDERS.
   1.4.2.2. FURNISH MATERIALS WITH A MAXIMUM PLASTICITY INDEX (PI) OF 3 AS DETERMINED IN ACCORDANCE WITH AASHTO T89 AND T90.
   1.4.2.3. FURNISH MATERIAL EXHIBITING AN ANGLE OF INTERNAL FRICTION OF NOT LESS THAN 34 DEGREES AS DETERMINED, IN ACCORDANCE WITH AASHTO-T236, ON THE PORTION FINER THAN THE NO. 10 SIEVE COMPACTED TO 95% OF PTM NO. 106, METHOD B, AT OPTIMUM MOISTURE CONTENT, EXCEPT FOR COARSE AGGREGATE AS SPECIFIED IN SECTION 703.2.
   1.4.3. DIRECT SHEAR TESTING MAY BE PERFORMED ON SAMPLES CONTAINING MATERIAL LARGER THAN THE NO. 10 SIEVE, IF THE SHEAR DEVICE CONFORMS TO AASHTO-T236, SECTIONS 5.4 AND 5.5.
   1.5. UNCLASSIFIED BACKFILL BEHIND STEMS -
   1.5.1. ANGLE OF INTERNAL FRICTION - 30°
   1.5.2. DENSITY 120 PCF
   1.5.3. 95% STANDARD COMPACTION

2. USE STANDARD MOMENT SLAB WITH CIP/PRECAST CONCRETE BARRIER WHERE INDICATED, SHOWN ON BC-799M.

3. TOLERANCES. AS PER 714.9 OR ACI 117 - PROVIDE UNITS MANUFACTURED TO THE FOLLOWING:
   3.1. TOLERANCES:

HEIGHT	+/-	1/4"
LENGTH	+/-	1/2"
THICKNESS	+/-	1/4"
BOWING AND WARPAGE	+/-	1/2" (12 MM)
TONGUE & GROOVE	+/-	3/16" (5 MM)

   DEVIATION FROM SQUARE MEASURED ON THE DIAGONAL OF THE FRONT FACE - 1/2".
   HORIZONTAL JOINT OPENINGS BETWEEN PANELS SHALL BE 1/2" ± 3/8"
   VERTICAL JOINT OPENINGS BETWEEN PANELS SHALL BE 3/8" (± 3/8").
   VERTICAL TOLERANCE, PLUMBNESS AND HORIZONTAL ALIGNMENT TOLERANCE AS THE WALL IS CONSTRUCTED SHALL NOT EXCEED 3/4" WHEN MEASURED WITH A 10'-0" STRAIGHT EDGE.

MATERIALS CONT.

4. APPLY ANTI-GRAFFITI PAINT TO EXPOSED SURFACES IN THE FIELD WHERE INDICATED OR SPECIFIED.
5. SEE BC-799 FOR ADDITIONAL DETAILS NOT SHOWN.
6. PANELS MUST BE LIFTED FROM THE VERTICAL POSITION ONLY.
7. REJECTION - REJECT INDIVIDUAL PRECAST CONCRETE PANEL FOR ANY OF THE FOLLOWING AND AS DETERMINED BY THE ENGINEER:

   7.1. FRACTURES OR CRACKS PASSING THROUGH THE PANEL.ALL STRUCTURALLY CRACKED PANELS, AS DETERMINED BY THE ENGINEER, WILL BE REJECTED EITHER AT THE FABRICATION SHOP OR AT THE CONSTRUCTION SITE, EVEN AFTER INSTALLATION, BUT PRIOR TO ACCEPTANCE OF THE PROJECT.
   7.2. DEFECTS THAT INDICATE PROPORTIONING, MIXING, AND MOLDING NOT IN COMPLIANCE WITH THE SPECIFICATION, AS SPECIFIED OR INDICATED.
   7.3. HONEYCOMBED OPEN TEXTURE.
   7.4. DAMAGED ENDS WHERE SUCH DAMAGE WOULD PREVENT MAKING A SATISFACTORY JOINT.
   7.5. TWENTY-EIGHT (28) DAY COMPRESSIVE STRENGTH IS LESS THAN DESIGN STRENGTH OF CONCRETE.
   7.6. DIMENSIONS NOT CONFORMING TO THE ALLOWABLE TOLERANCES SPECIFIED.
8. MARK THE REJECTED PRECAST PANEL "REJECTED FOR THE DEPARTMENT'S USE" WITH WATERPROOF PAINT. REPAIR AND REPAIR PROCEDURES REQUIRE APPROVAL BY THE ENGINEER.
9. TECHNICAL ASSISTANCE -
   9.1. HAVE A TRAINED REPRESENTATIVE PRESENT AT THE PROJECT SITE DURING ERECTION PROCEDURES TO ASSIST THE CONTRACTOR AND ENGINEER FULL TIME FOR THE FIRST FIVE DAYS AND THEN AS NEEDED FOR THE DURATION OF CONSTRUCTION. PROVIDE A TECHNICAL REPRESENTATIVE TO ASSIST IN THE EVENT UNUSUAL PROBLEMS OR SPECIAL CIRCUMSTANCES ARISE.

AUGUST 1, 2013

REVISION	DATE	DESCRIPTION
4	07/29/2013	GENERAL
3	07/19/2013	GENERAL
2	11/21/2012	GENERAL
1	1/6/2012	GENERAL

PADOT DRAWING 2011-203 PE

COMMENWEALTH OF PENNSYLVANIA
DEPARTMENT OF TRANSPORTATION
BUREAU OF PROJECT DELIVERY

RETT WALL STANDARDS
PREFABRICATED RETAINING WALL SYSTEM

J & R SLAW INC.
438 RIVERVIEW RD.,LEHIGHTON, PA 18235 PHONE (610) 852-2020 FAX (610) 852-2098

DESIGNED BY:	SCALE: nts	REV. :
DRAWN BY: JDK	DATE: 03-22-11	SHEET NO.: 2 OF 12

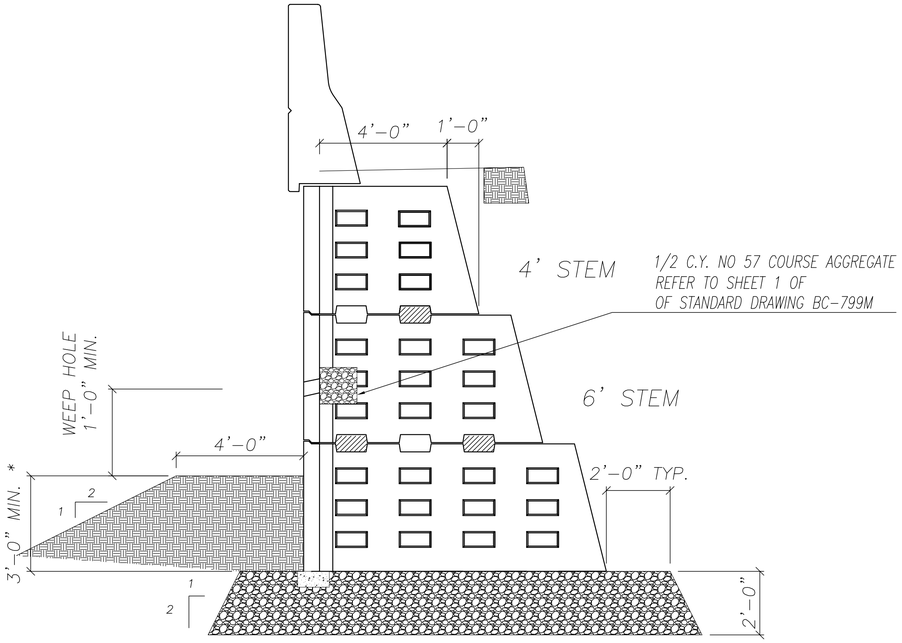

REMOVE 2'-0 OF EXISTING SOIL BELOW TOP OF LEVELING PAD AND REPLACE WITH COMPACTED 2A COARSE AGGREGATE.

SECTION THROUGH WALL
FOUNDATION DETAIL
FILL SECTION

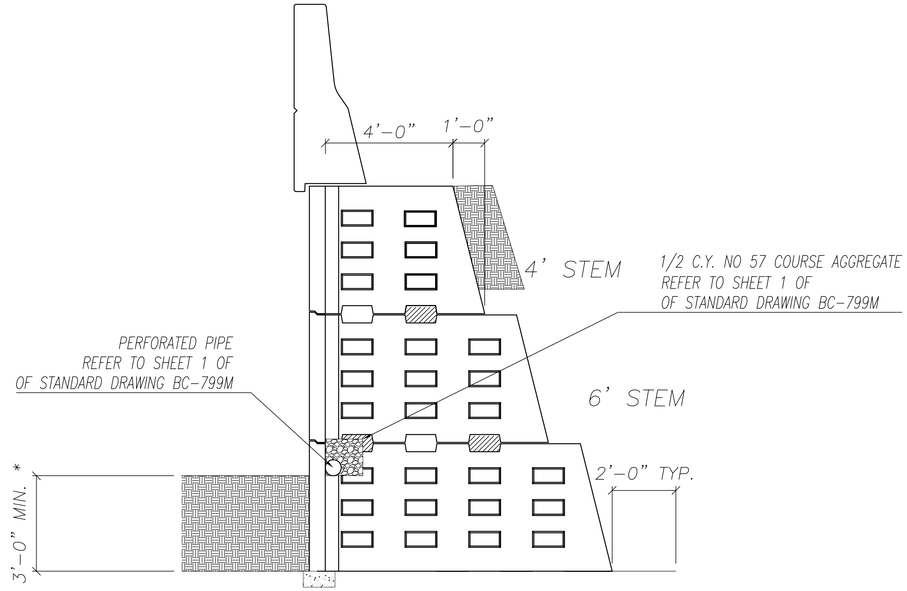

SECTION THROUGH WALL
FOUNDATION DETAIL
CUT SECTION

* OR PREVAILING FROST DEPTH OR AS REQUIRED BY DESIGN AND SLOPE STABILITY ANALYSIS.

EXCAVATION AND FOUNDATIONS:

1. THE FOUNDATION FOR THE RETT-WALL STRUCTURE SHALL BE EXCAVATED AND GRADED LEVEL IN ACCORDANCE WITH SECTION 203, TO THE LIMIT INDICATED ON THE SHOP DRAWINGS. THE WIDTH MUST BE EQUAL TO OR EXCEEDING THE LENGTH OF THE BOTTOM RETT-WALL STEM, USING THE TOP OF THE LEVELING PAD AS THE GRADE ELEVATION.
2. THE PROPOSED WALL IS TO BE PLACED ON 2'-0" OF COMPACTED 2A COARSE AGGREGATE ON EXISTING SOILS. REMOVE 2'-0 OF EXISTING SOIL BELOW TOP OF LEVELING PAD GRADE AND REPLACE WITH PENNDOT 2A COARSE AGGREGATE. PRIOR TO PLACING COARSE AGGREGATE PROOF ROLL IN-SITU SOIL WITH ROLLER IN ACCORDANCE WITH PUB. 408, SECTION 108.05(c) 3a OR 3e.
3. IF THE CONTRACTOR OVER EXCAVATES, THE AREA MUST BE RECONSTRUCTED AS DIRECTED BY THE ENGINEER. FOUNDATION MATERIAL FOUND TO BE UNSUITABLE SHALL BE REMOVED AND REPLACED WITH GRANULAR MATERIAL, AS DIRECTED BY THE ENGINEER. AT EACH UNIT FOUNDATION LEVEL, PROVIDE A CAST-IN-PLACE CONCRETE LEVELING PAD AS INDICATED. LEVELING PADS SHALL BE LEVEL TO WITHIN 1/4".
4. SHIMS MAY BE USED AS NECESSARY TO LEVEL THE RETT-WALL UNITS. USE NO MORE THAN 1" COMBINED THICKNESS OF SHIMS. THE SHIMS SHOULD BE PLASTIC. IF MORE LEVELING IS REQUIRED, REPLACE THE LEVELING PAD.
3. DRAINAGE: INSTALL DRAINAGE SYSTEM BEHIND THE WALL AS SHOWN OR OTHERWISE INDICATED ON THE APPROVED SHOP DRAWINGS.
4. JOINT MATERIAL:
   - 4.1. PLACE THE BEARING PAD ON THE TOP OF THE FRONT FACE OF THE RETT-WALL UNIT PRIOR TO STACKING A UNIT ABOVE IT. THE HORIZONTAL JOINT MATERIAL SHOULD BE PLACED LINING UP WITH THE REAR EDGE OF THE FRONT FACE PANEL BUT NOT OVERHANGING IT.
   - 4.2. ADHERE GEOTEXTILE FABRIC, CLASS 4 ON ALL JOINTS.
5. BACKFILLING:
   - 5.1. FILL THE INTERIOR BETWEEN THE STEM AREA OF EACH SUCCESSIVE COURSE OF THE RETT-WALL UNITS WITH THE GRANULAR FILL MATERIAL SPECIFIED.
   - 5.1. FILL UNITS IN UNIFORM LAYERS NO MORE THAN 2'-0" THICK AND THOROUGHLY CONSOLIDATE WITH A VIBRATORY TAMPING DEVICE,
   - 5.2. PLACE SPECIFIED BACKFILL OUTSIDE OF THE WALL WITHIN THE LIMITS SHOWN ON STANDARD DRAWINGS (RC-12) AS INDICATED OR DIRECTED, IN ACCORDANCE WITH THE REQUIREMENTS OF SECTION 1001.3.
   - 5.3. BACKFILL PLACEMENT SHALL CLOSELY FOLLOW THE ERECTION OF EACH LIFT OF RETT-WALL UNITS. BACKFILL SHALL BE PLACED IN APPROXIMATE EQUAL AMOUNTS ON EACH SIDE OF THE STEMS TO AVOID DISPLACEMENT OF THE UNITS. BACKFILL MAY BE CAREFULLY DISCHARGED DIRECTLY ON TOP OF THE STEMS TO FACILITATE THIS REQUIREMENT. BACKFILL SHALL BE COMPACTED TO AT LEAST 95% OF MAXIMUM LABORATORY DRY DENSITY, ASTM D-698. COMPACTION SHOULD PROCEED FROM THE BACK FACE OF THE RETT-WALL UNIT TOWARD THE END OF THE STEM.

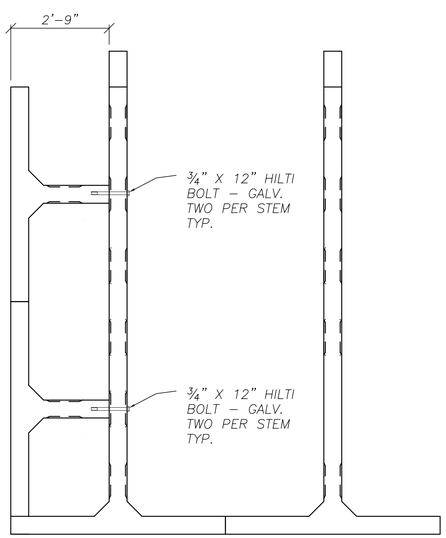

CORNER DETAIL
FIRST LAYER

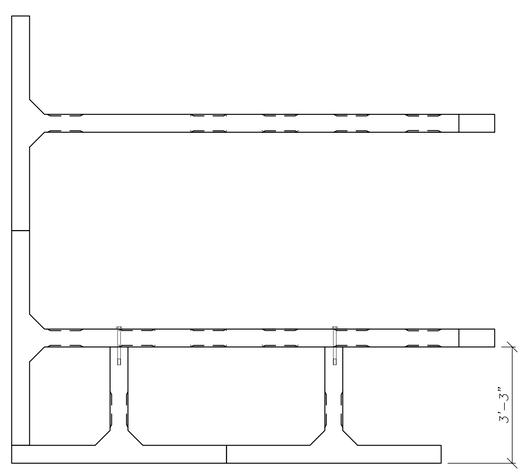

CORNER DETAIL
SECOND LAYER

REVISION	DATE	DESCRIPTION
3	07/29/2013	GENERAL
2	07/19/2013	GENERAL
1	1/6/2012	GENERAL

PADOT DRAWING 2011-203 PE

COMMENWEALTH OF PENNSYLVANIA
DEPARTMENT OF TRANSPORTATION
BUREAU OF PROJECT DELIVERY

RETT WALL STANDARDS
PREFABRICATED RETAINING WALL
SYSTEM

AUGUST 1, 2013

J & R SLAW INC.
438 RIVERVIEW RD.,LEHIGHTON, PA 18235 PHONE (610) 852-2020 FAX (610) 852-2098

DESIGNED BY:	SCALE: nts	REV. :
DRAWN BY: JDK	DATE: 03-22-11	SHEET NO.: 3 OF 12

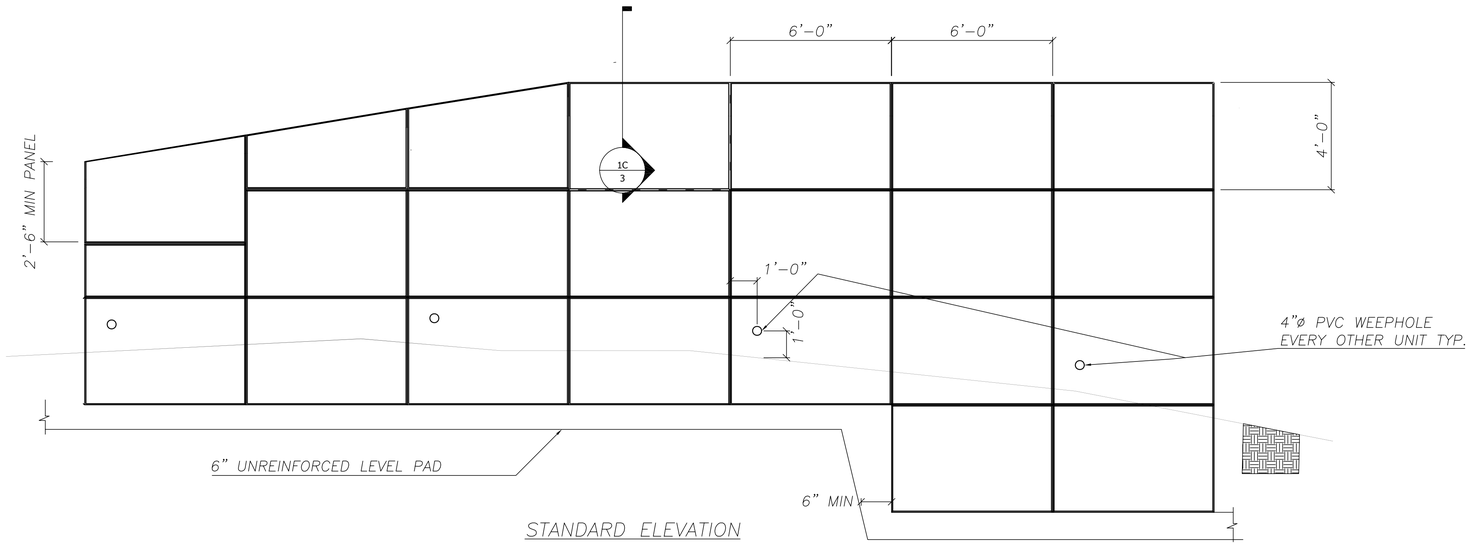

STANDARD ELEVATION

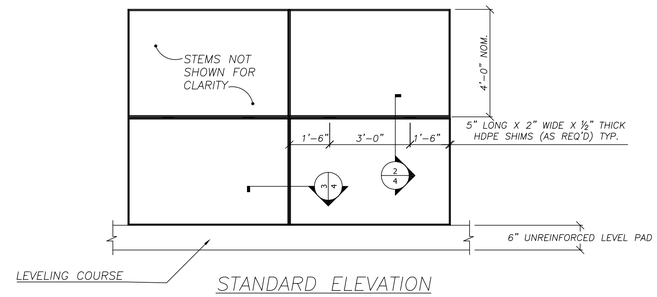

STANDARD ELEVATION

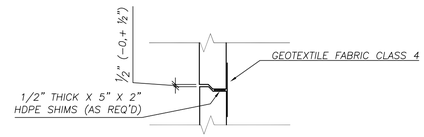

SECTION 2

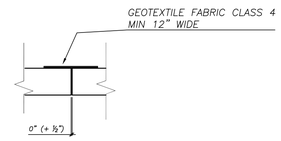

SECTION 3

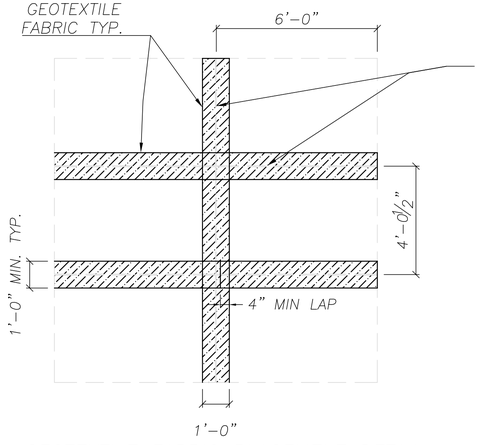

GEOTEXTILE FABRIC PLACEMENT DETAIL

NOTE:
COVER ALL JOINTS ON BACK SIDE WITH GEOTEXTILE FABRIC, CLASS 4. APPLY ADHESIVE ON PRECAST ONLY. DO NOT APPLY ADHESIVE WITHIN 2" OF THE JOINT. PROVIDE A 4" MINIMUM LAP

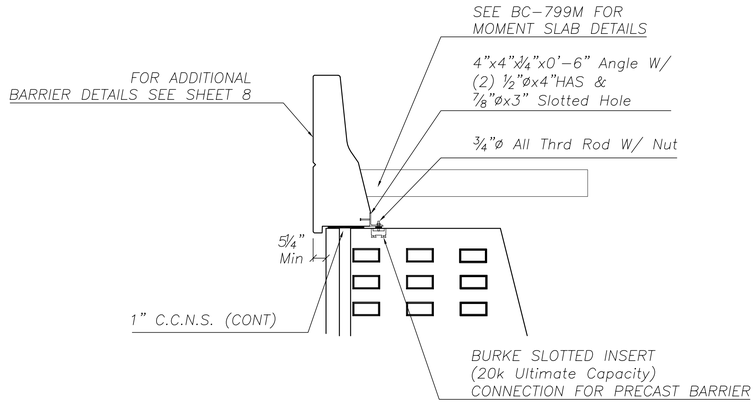

1C TYP. MOMENT SLAB SECTION

PADOT DRAWING 2011-203 PE

COMMENWEALTH OF PENNSYLVANIA
DEPARTMENT OF TRANSPORTATION
BUREAU OF PROJECT DELIVERY

RETT WALL STANDARDS
PREFABRICATED RETAINING WALL
SYSTEM

AUGUST 1, 2013

REVISION	DATE	DESCRIPTION
3	07/29/2013	GENERAL
2	07/19/2013	GENERAL
1	11/21/2012	GENERAL

J & R SLAW INC.
438 RIVERVIEW RD.,LEHIGHTON, PA 18235 PHONE (610) 852-2020 FAX (610) 852-2098

PROJECT: J&R SLAW PRECAST "RETT WALL"	DESIGNED BY:	SCALE: nts	REV. :
DRAWING TITLE: RETT-WALL SECTIONS AND DETAILS	DRAWN BY: JDK	DATE: 03-22-11	SHEET NO.: 4 OF 12

TOP OF STEM LENGTHS = 6', 8' 10', 12', 16', 18', 20', 22', 24' 31'

BOTTOM OF STEM LENGTHS = 7', 9', 11', 13', 17', 19', 21', 23', 25', 32'

TYPICAL SECTION THROUGH 40'HIGH WALL
LEVEL BACKFILL

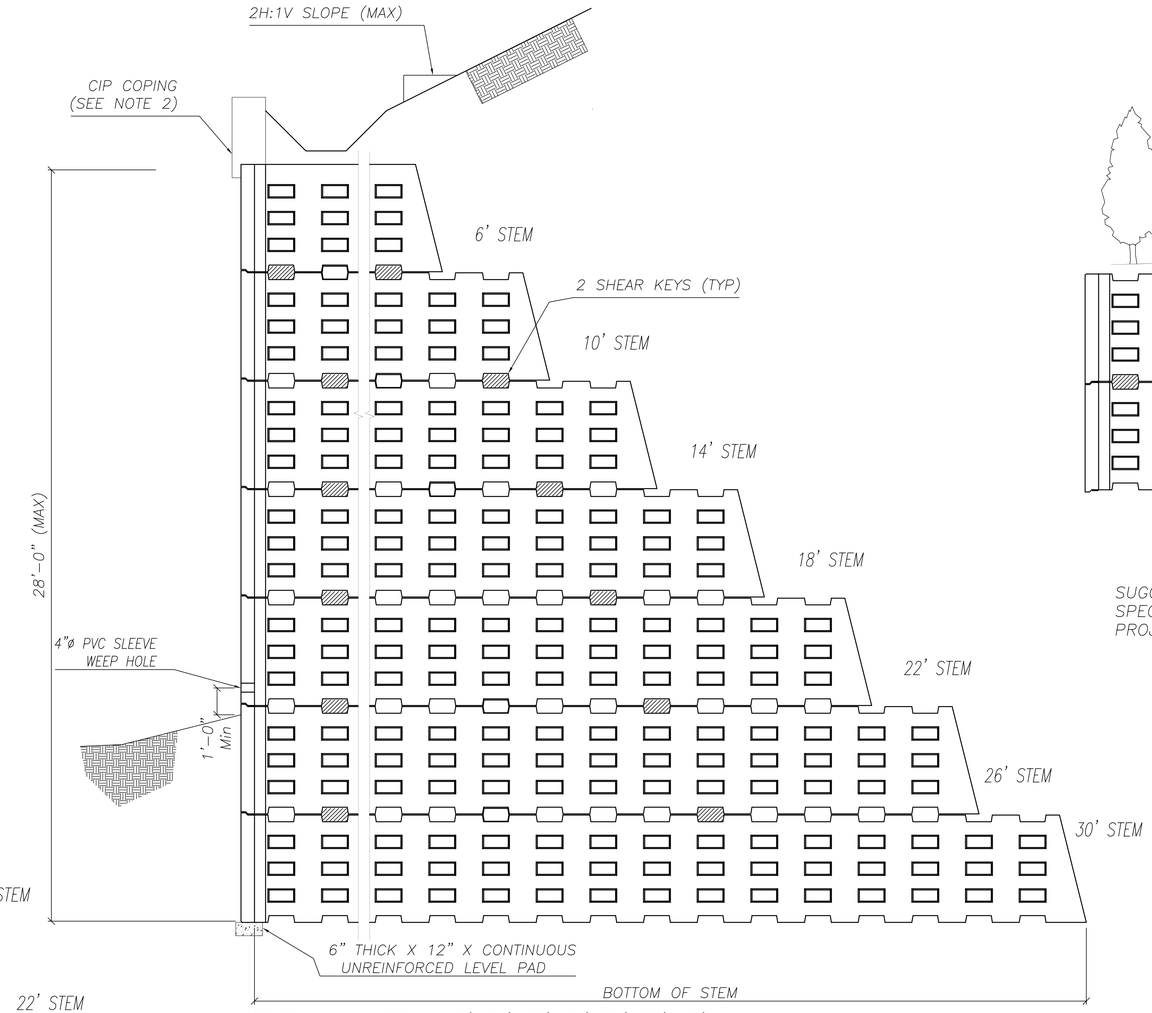

TOP OF STEM LENGTHS = 6', 10', 14', 18', 22', 26', 30'

BOTTOM OF STEM LENGTHS = 7', 11', 15', 19', 23', 27', 31'

TYPICAL SECTION THROUGH 28' HIGH WALL
2H:1V BACKFILL

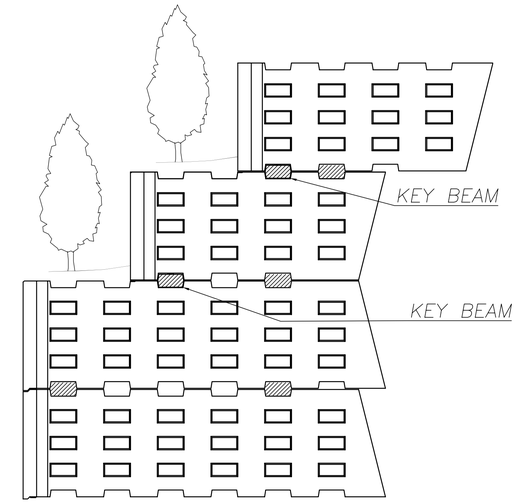

TERRACED WALL DETAIL

SUGGESTED PLACEMENT FOR PLANTER SPECIAL DESIGN SHALL BE MADE FOR EACH PROJECT.

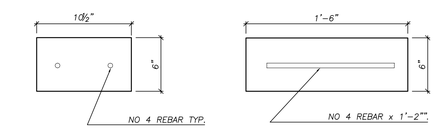

SECTION OF KEY BEAM ELEVATION OF KEY BEAM

KEY BEAM DETAILS

TABLE 1: THE FACTORED BEARING PRESSURE OF TYPICAL DESIGN SECTION	
WALL HEIGHT (FT)	FACTORED BEARING PRESSURE (KSF)
4	1.3
8	2.2
12	3.4
16	4.5
20	5.6
24	6.8
28	7.0

KEY BEAM NOTE:
1. TWO KEY BEAM IS REQUIRED PER COURSE TYPICAL.
2. TO BE DESIGNED BY THE CONTRACTOR BASED ON PROJECT – TO – PROJECT CASE.

AUGUST 1, 2013

PADOT DRAWING 2011-203 PE

COMMENWEALTH OF PENNSYLVANIA
DEPARTMENT OF TRANSPORTATION
BUREAU OF PROJECT DELIVERY

RETT WALL STANDARDS
PREFABRICATED RETAINING WALL SYSTEM

REVISION	DATE	DESCRIPTION
3	07/29/2013	GENERAL
2	07/19/2013	GENERAL
1	11/21/2012	GENERAL

J & R SLAW INC.
438 RIVERVIEW RD.,LEHIGHTON, PA 18235 PHONE (610) 852-2020 FAX (610) 852-2098

PROJECT: J&R SLAW PRECAST "RETT WALL"	DESIGNED BY:	SCALE: nts	REV. :
DRAWING TITLE: RETT-WALL DETAILS	DRAWN BY: JDK	DATE: 03-22-11	SHEET NO.: 5 OF 12

SEE SHEET 7 FOR RETT-WALL GEOMETRY, HARDWARE & REINFORCING INFORMATION

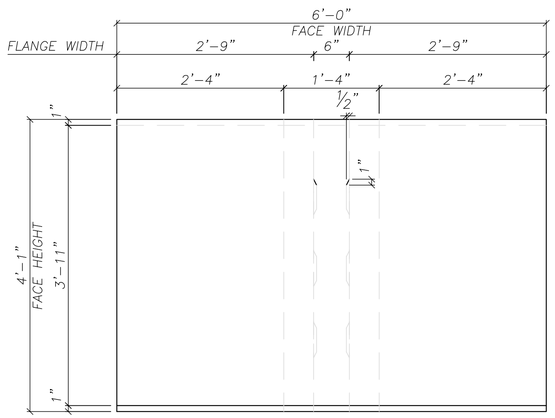

FRONT FACE ELEVATION

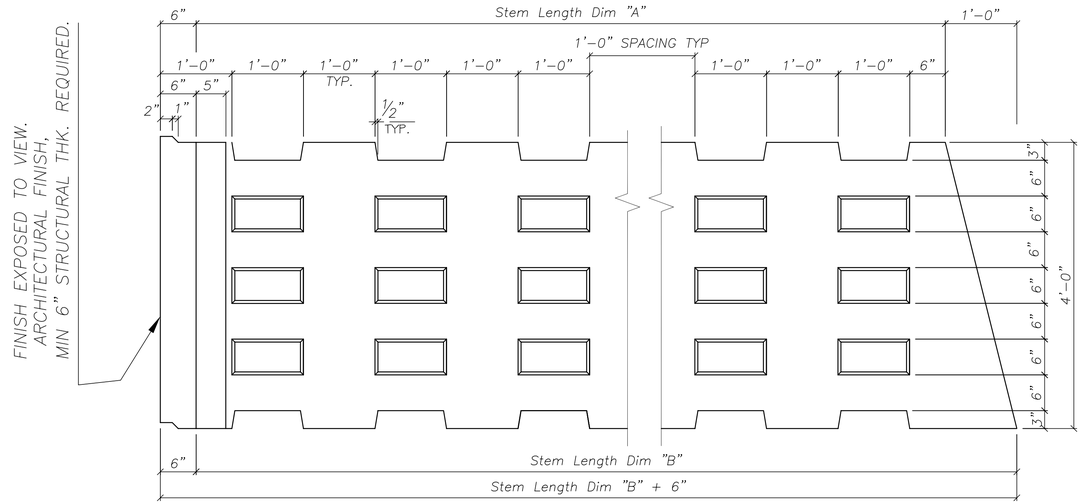

SIDE FACE ELEVATION

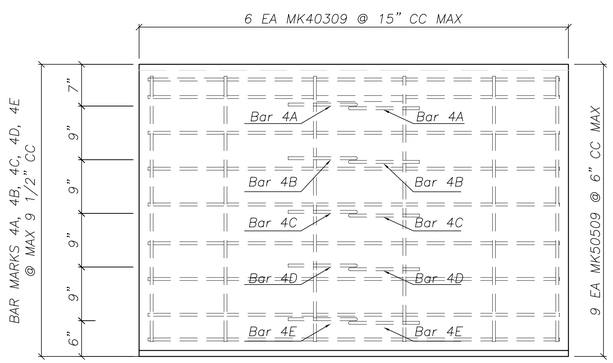

FRONT FACE REINFORCING

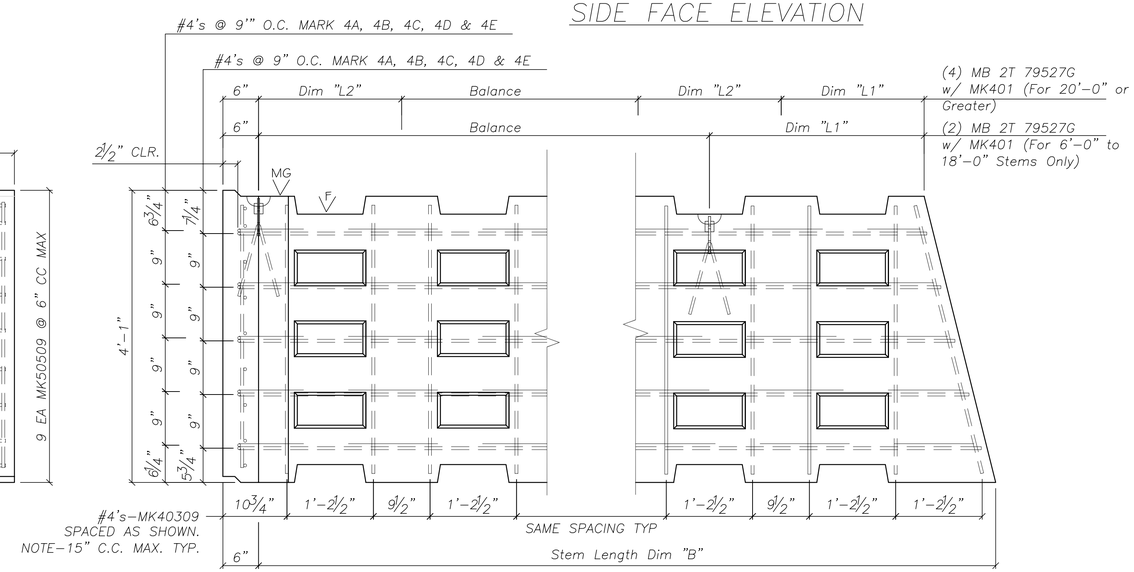

SIDE FACE REINFORCING
4'-0" HIGH STEM

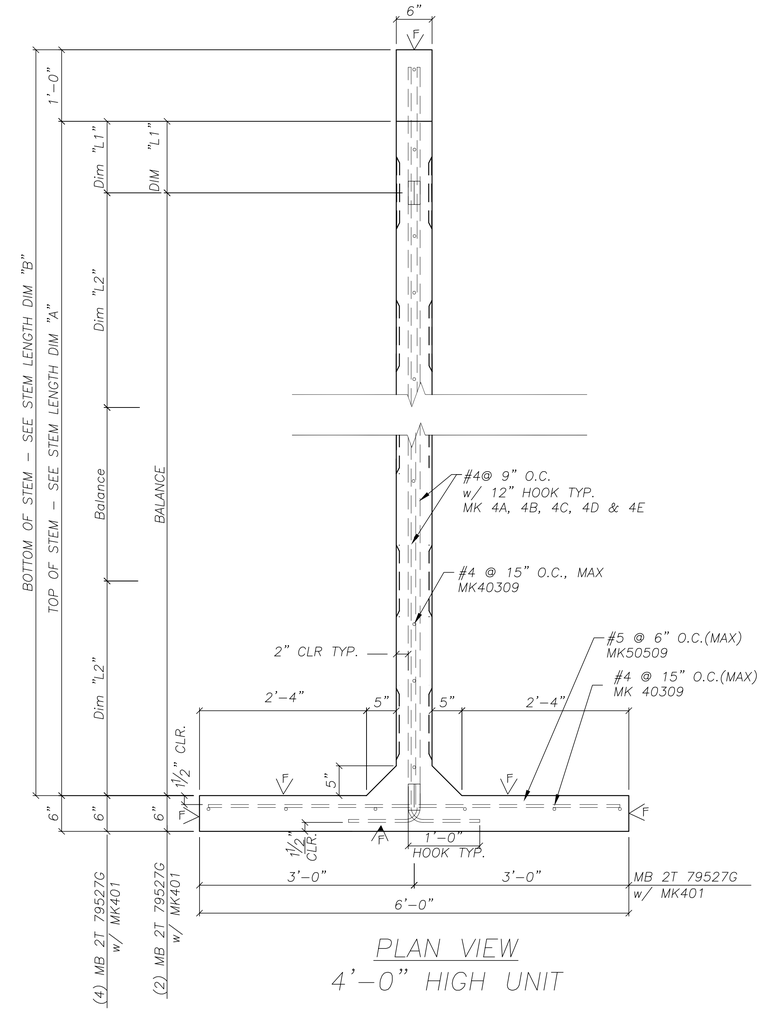

PLAN VIEW
4'-0" HIGH UNIT

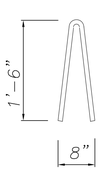

401

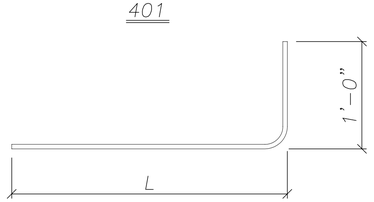

410-479
See Table For Bar Mark
and Dimension "L"

LEGEND:

- MIN = MINIMUM
- MAX = MAXIMUM
- O.C. = ON CENTER
- DIM = DIMENSION
- TYP. = TYPICAL
- CLR = CLEARANCE
- MK = BAR MARK
- G = GALVANIZED
- MB = MEADOW BURKE
- MG = MAGNESIUM FLOAT FINISH
- F = FORM FINISH

NOTES:

- WORK TO CONFORM TO PADOT SPECS.
- CONCRETE TO BE 5000PSI @ 28 DAYS. fci - 3500 PSI
- WWF AND REBAR TO BE PER PADOT SPECS.
- REBARS TO BE EPOXY OR GALV.
- STORE AND SHIP ON EDGE WITH BLOCKING @ LIFTING LOCS.
- COLOR AND TEXTURE PER APPROVED SAMPLE.
- CHAMFER FACE EDGE 1/2" TYP.

AUGUST 1, 2013

J & R SLAW INC.
438 RIVERVIEW RD.,LEHIGHTON, PA 18235 PHONE (610) 852-2020 FAX (610) 852-2098

PENNSYLVANIA DEPARTMENT OF TRANSPORTATION

PROJECT: J&R SLAW PRECAST "RETT WALL"	DESIGNED BY:	SCALE: nts	REV. :
DRAWING TITLE: 4 X 6 X 6'-0" TO 31'-0" FULL HEIGHT UNIT	DRAWN BY: JDK	DATE: 03-22-11	SHEET NO.: 6 OF 12

	Unit Size (In Feet)	4 x 6 x 6	4 x 6 x 8	4 x 6 x 10	4 x 6 x 12	4 x 6 x 14	4 x 6 x 16	4 x 6 x 18	4 x 6 x 20	4 x 6 x 22	4 x 6 x 24	4 x 6 x 26	4 x 6 x 28	4 x 6 x 30	4 x 6 x 31
Specs	Stem Length (Dim "A")	6'-0"	8'-0"	10'-0"	12'-0"	14'-0"	16'-0"	18'-0"	20'-0"	22'-0"	24'-0"	26'-0"	28'-0"	30'-0"	31'-0"
	Stem Length (Dim "B")	7'-0"	9'-0"	11'-0"	13'-0"	15'-0"	17'-0"	19'-0"	21'-0"	23'-0"	25'-0"	27'-0"	29'-0"	31'-0"	32'-0"
	Volume (Cu Yds)	0.95	1.1	1.25	1.4	1.54	1.69	1.84	1.98	2.13	2.28	2.43	2.58	2.73	2.8
	Weight (In Lbs)	3848	4455	5062.5	5670	6237	6844.5	7452	8019	8626.5	9234	9841.5	10449	11056.5	11340
Hdw	2T MB 79527G	2	2	2	2	2	2	2	4	4	4	4	4	4	4
	Lifter Dim L1	3'-0"	3'-0"	4'-0"	4'-0"	4'-0"	4'-0"	4'-0"	4'-0"	5'-0"	5'-0"	5'-0"	5'-0"	5'-0"	5'-0"
	Lifter Dim L2	0	0	0	0	0	0	0	4'-0"	4'-0"	5'-0"	6'-0"	7'-0"	8'-0"	9'-0"
Reinforcing	Mk401 (Bent #4)	2	2	2	2	2	2	2	4	4	4	4	4	4	4
	Mk40309 (#4 x 3'-9")	13	15	17	19	21	23	25	27	29	31	33	35	37	38
	Mk50509 (#5 x 5'-9")	9	9	9	9	9	9	9	9	9	9	9	9	9	9
	Bent 4A (Mark)	Mk410	Mk415	Mk420	Mk425	Mk430	Mk435	Mk440	Mk445	Mk450	Mk455	Mk460	Mk465	Mk470	Mk475
	Qty	2	2	2	2	2	2	2	2	2	2	2	2	2	2
	Dim "L"	6'-4"	8'-4"	10'-4"	12'-4"	14'-4"	16'-4"	18'-4"	20'-4"	22'-4"	24'-4"	26'-4"	28'-4"	30'-4"	31'-4"
	Bent 4B (Mark)	Mk411	Mk416	Mk421	Mk426	Mk431	Mk436	Mk441	Mk446	Mk451	Mk456	Mk461	Mk466	Mk471	Mk476
	Qty	2	2	2	2	2	2	2	2	2	2	2	2	2	2
	Dim "L"	6'-7"	8'-7"	10'-7"	12'-7"	14'-7"	16'-7"	18'-7"	20'-7"	22'-7"	24'-7"	26'-7"	28'-7"	30'-7"	31'-7"
	Bent 4C (Mark)	Mk412	Mk417	Mk422	Mk427	Mk432	Mk437	Mk442	Mk447	Mk452	Mk457	Mk462	Mk467	Mk472	Mk477
	Qty	2	2	2	2	2	2	2	2	2	2	2	2	2	2
	Dim "L"	6'-9"	8'-9"	10'-9"	12'-9"	14'-9"	16'-9"	18'-9"	20'-9"	22'-9"	24'-9"	26'-9"	28'-9"	30'-9"	31'-9"
	Bent 4D (Mark)	Mk413	Mk418	Mk423	Mk428	Mk433	Mk438	Mk443	Mk448	Mk453	Mk458	Mk463	Mk468	Mk473	Mk478
	Qty	2	2	2	2	2	2	2	2	2	2	2	2	2	2
	Dim "L"	6'-11"	8'-11"	10'-11"	12'-11"	14'-11"	16'-11"	18'-11"	20'-11"	22'-11"	24'-11"	26'-11"	28'-11"	30'-11"	31'-11"
	Bent 4E (Mark)	Mk414	Mk419	Mk424	Mk429	Mk434	Mk439	Mk444	Mk449	Mk454	Mk459	Mk464	Mk469	Mk474	Mk479
	Qty	2	2	2	2	2	2	2	2	2	2	2	2	2	2
	Dim "L"	7'-1"	9'-1"	11'-1"	13'-1"	15'-1"	17'-1"	19'-1"	21'-1"	23'-1"	25'-1"	27'-1"	29'-1"	31'-1"	32'-1"

AUGUST 1, 2013

J & R SLAW INC.

438 RIVERVIEW RD.,LEHIGHTON, PA 18235 PHONE (610) 852-2020 FAX (610) 852-2098

PENNSYLVANIA DEPARTMENT OF TRANSPORTATION

PROJECT: J&R SLAW PRECAST "RETT WALL"	DESIGNED BY:	SCALE: nts	REV. :
DRAWING TITLE: 4 X 6 X 6'-0" TO 31'-0" INFORMATION TABLE	DRAWN BY: JDK	DATE: 03-22-11	SHEET NO.: 7 OF 12

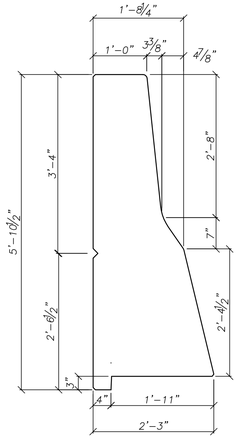

DIMENSIONS FOR
PRECAST BARRIER

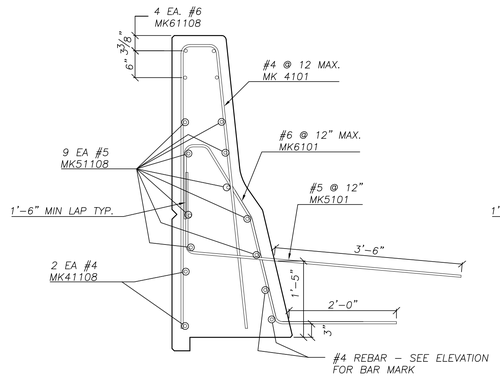

PRECAST TRAFFIC BARRIER
REINFORCEMENT WITH
BITUMINOUS CONCRETE SHOULDER

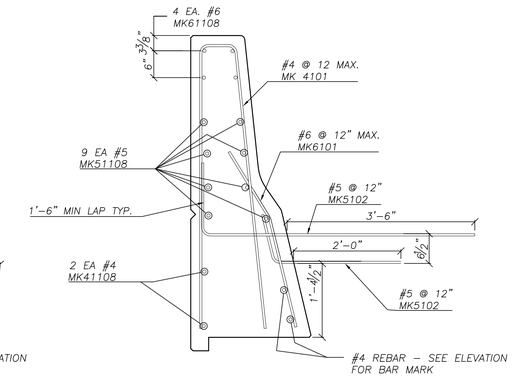

PRECAST TRAFFIC BARRIER
REINFORCEMENT WITH
CEMENT CONCRETE SHOULDER

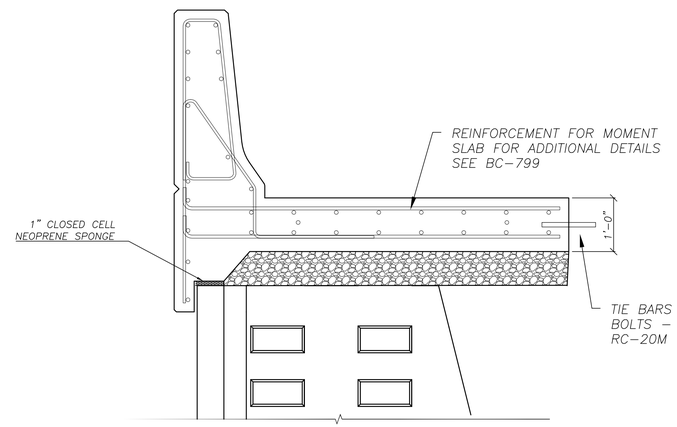

REINFORCEMENT FOR CIP BARRIER WITH
CEMENT CONCRETE SHOULDER (CIP)
FOR ADDITIONAL DETAILS SEE BC–799

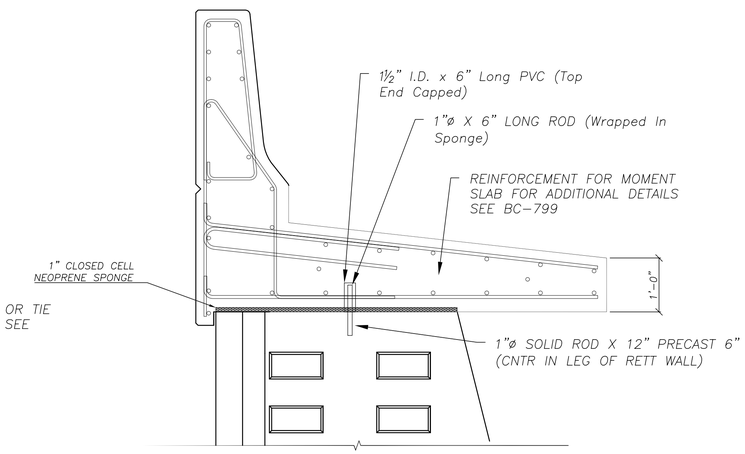

REINFORCEMENT FOR CIP BARRIER WITH
BITUMINOUS CONCRETE SHOULDER
FOR ADDITIONAL DETAILS – SEE BC 799

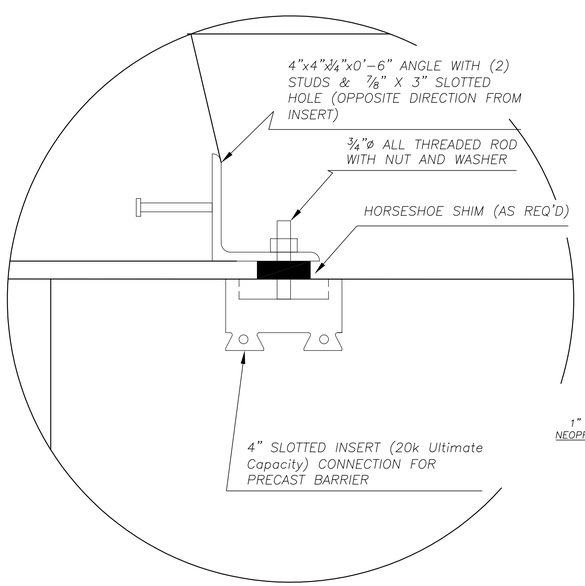

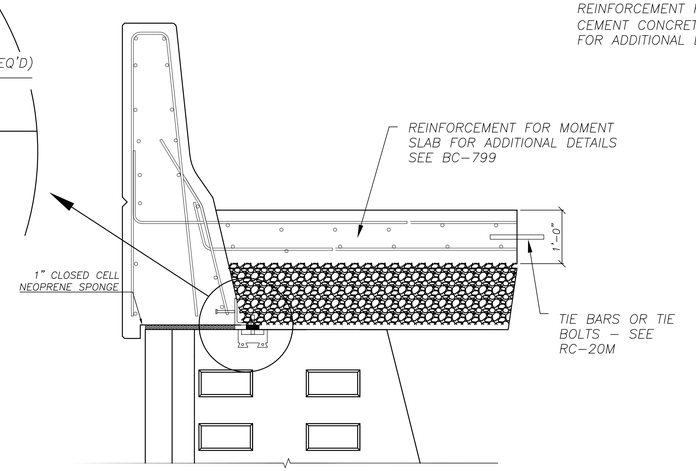

REINFORCEMENT FOR PRECAST
BARRIER WITH CEMENT CONCRETE
SHOULDER
FOR ADDITIONAL DETAILS SEE
BC–799

AUGUST 1, 2013

J & R SLAW INC. 438 RIVERVIEW RD.,LEHIGHTON, PA 18235 PHONE (610) 852–2020 FAX (610) 852–2098	PENNSYLVANIA DEPARTMENT OF TRANSPORTATION		
PROJECT: J&R SLAW PRECAST "RETT WALL"	DESIGNED BY:	SCALE: nts	REV. :
DRAWING TITLE: MOMENT SLAB DETAILS	DRAWN BY: JDK	DATE: 03–22–11	SHEET NO.: 8 OF 12

RETT-WALL, GEOMETRY & TYPICAL REINFORCING

f'c = 5000 psi
f'ci = 3500 psi
UNIT WGHT. 150 PCF

fy (mesh) = 65000 psi
fy (rebar) = 60000 psi

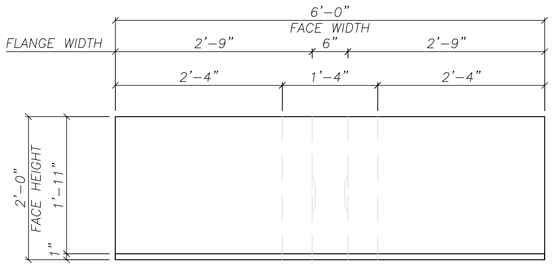

FRONT FACE ELEVATION
2'-0" UNIT

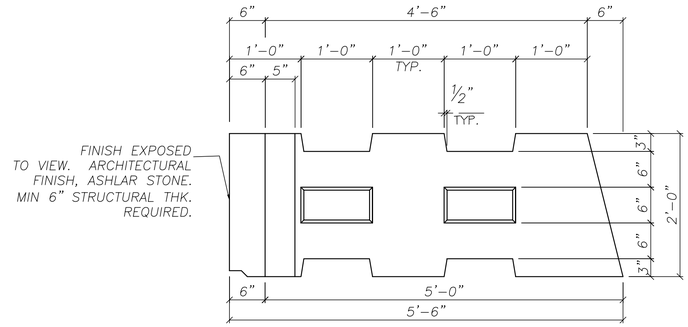

SIDE FACE ELEVATION
2'-0" UNIT

UNIT DESIGNATION	STEM LENGTH	VOLUME OF CONCRETE / C.Y.	WEIGHT / LBS	
2 X 6 X 4.5 HALF HEIGHT	4'-6"	0.41	1650	
MB 2T 79527G	2 EA			
REINFORCING	SIZE		LENGTH	QUANTITY
MK 401	#4		3'-0"	2
MK 402	#4		4'-10"	2
MK 403	#4		5'-0"	2
MK 404	#4		5'-1"	2
MK 40109	#4		1'-9"	11
MK 50509	#5		5'-9"	5

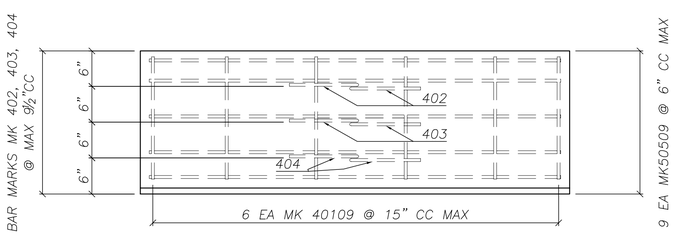

FRONT FACE REINFORCING
2'-0" UNIT
HALF HEIGHT

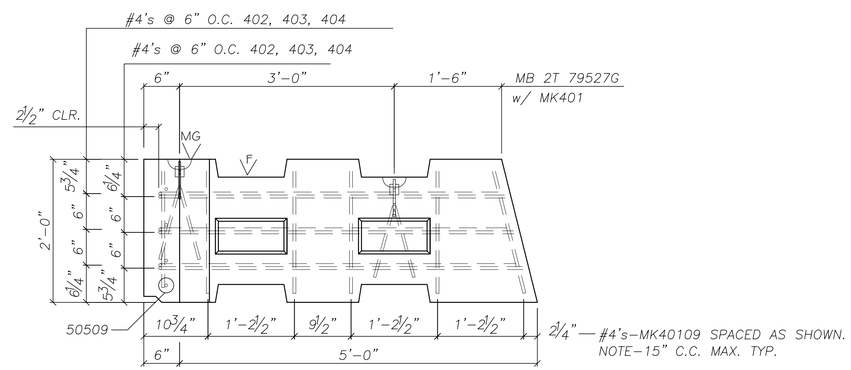

SIDE FACE REINFORCING
2'-0" UNIT W/ 4'-6"
STEM

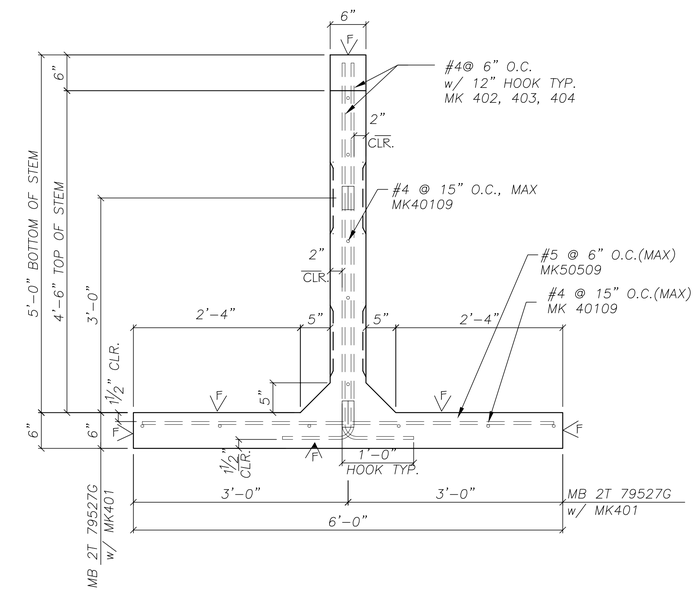

PLAN VIEW
2'-0" UNIT W/ 4.5' STEM

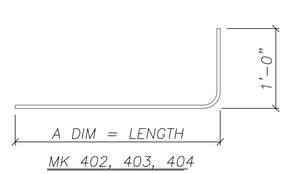

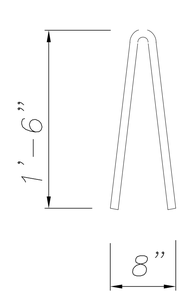

401

AUGUST 1, 2013

J & R SLAW INC. 438 RIVERVIEW RD.,LEHIGHTON, PA 18235 PHONE (610) 852-2020 FAX (610) 852-2098	PENNSYLVANIA DEPARTMENT OF TRANSPORTATION		
PROJECT: J&R SLAW PRECAST "RETT WALL"	DESIGNED BY:	SCALE: nts	REV. :
DRAWING TITLE: 2X6X4.5 HALF HEIGHT UNIT	DRAWN BY: JDK	DATE: 03-22-11	SHEET NO.: 9 OF 12

RETT–WALL, GEOMETRY & TYPICAL REINFORCING

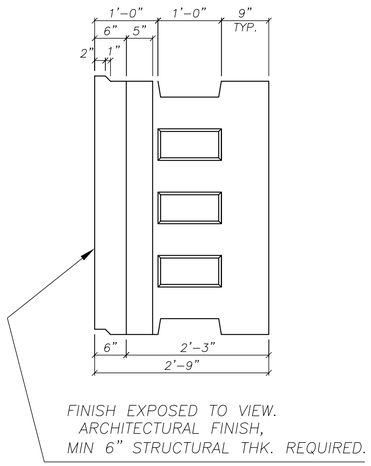

CORNER UNIT R
SIDE FACE ELEVATION

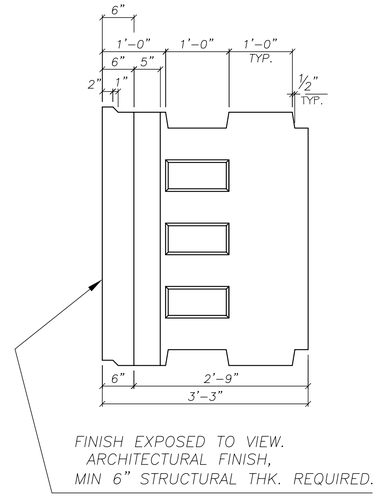

CORNER UNIT L
SIDE FACE ELEVATION

CORNER UNITS				
UNIT DESIGNATION	STEM LENGTH	VOLUME OF CONCRETE / C.Y.	WEIGHT / LBS	
4 X 6 X CORNER UNIT R	2'–3"	0.65	2650	
DIM "A"	DIM "B"			
2'–3"	2'–3"			
MB 2TON 79527G	One EA			
REINFORCING	SIZE		LENGTH	QUANTITY
Mk 401	#4		3'–0"	2
MK 405	#4	DIM A =	2'–6"	10
MK 40309	#4		3'–9"	9
MK 50509	#5		5'–9"	9
UNIT DESIGNATION	STEM LENGTH	VOLUME OF CONCRETE	WEIGHT	
4 X 6 X CORNER UNIT L	2'–9"	0.67	2,750	
DIM "A"	DIM "B"			
2'–9"	2'–9"			
MB 2TON 79527G	One EA			
REINFORCING	SIZE		LENGTH	QUANTITY
Mk 401	#4		3'–0"	2
MK406	#4	DIM A =	3'–0"	10
MK 40309	#4		3'–9"	9
MK 50509	#5		5'–9"	9

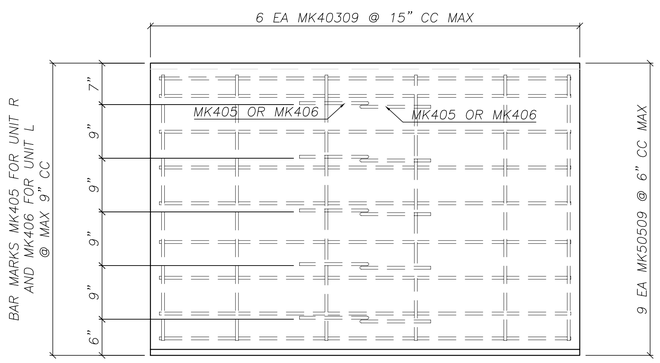

FRONT FACE REINFORCING
FOR CORNER UNIT

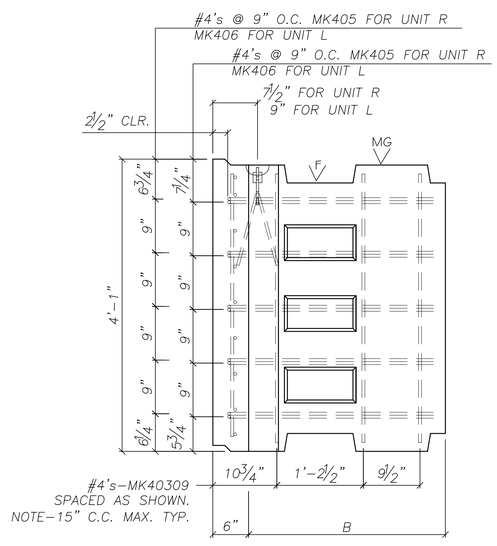

SIDE FACE REINFORCING
4'–0" HIGH CORNER UNITS R AND L

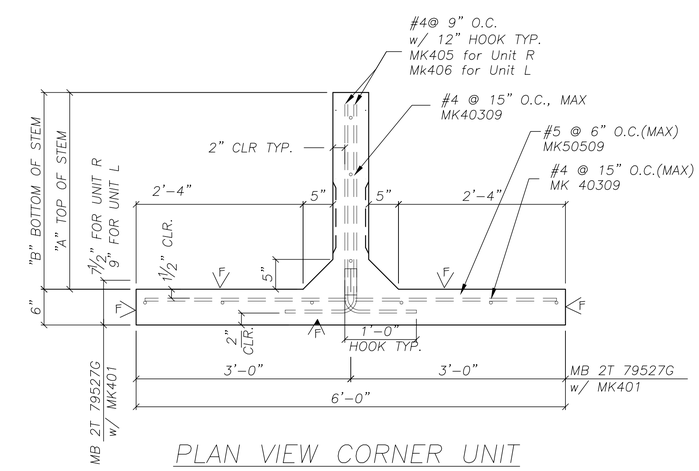

PLAN VIEW CORNER UNIT
4'–0" HIGH X "L" UNIT STEM

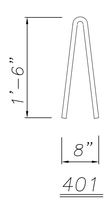

401

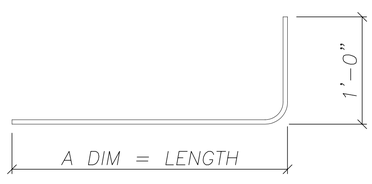

MK 405, 406

NOTES:
- WORK TO CONFORM TO PADOT SPECS.
- CONCRETE TO BE 5000PSI @ 28 DAYS. fci – 3500 PSI
- WWF AND REBAR TO BE PER PADOT SPECS.
- REBARS TO BE EPOXY OR GALV.
- STORE AND SHIP ON EDGE WITH BLOCKING @ LIFTING LOCS.
- COLOR AND TEXTURE PER APPROVED SAMPLE.
- CHAMFER FACE EDGE ½" TYP.

AUGUST 1, 2013

J & R SLAW INC.
438 RIVERVIEW RD.,LEHIGHTON, PA 18235 PHONE (610) 852–2020 FAX (610) 852–2098

PENNSYLVANIA
DEPARTMENT OF TRANSPORTATION

PROJECT: J&R SLAW PRECAST "RETT WALL"	DESIGNED BY:	SCALE: nts	REV. :
DRAWING TITLE: 4X6X CORNER UNITS R AND L	DRAWN BY: JDK	DATE: 03–22–11	SHEET NO.: 10 OF 12

RETT–WALL, GEOMETRY & TYPICAL REINFORCING

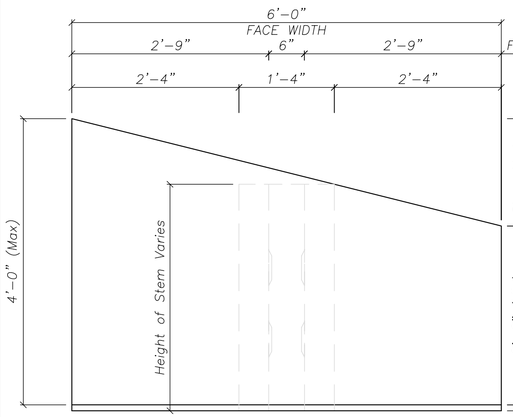

FRONT FACE ELEVATION
6'–0" UNIT

OR

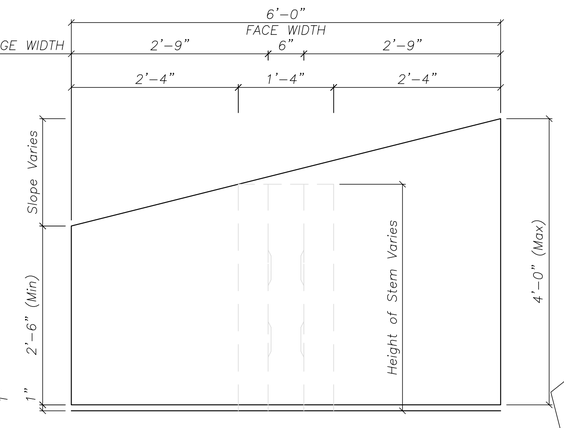

FRONT FACE ELEVATION
6'–0" UNIT

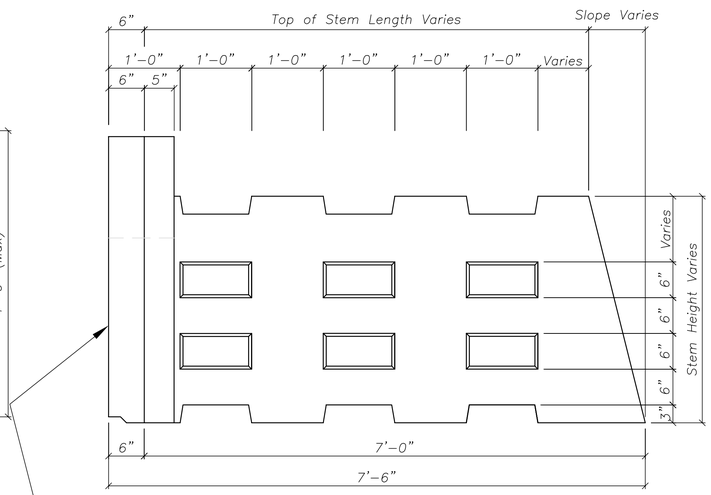

FINISH EXPOSED TO VIEW.
ARCHITECTURAL FINISH,
MIN 6" STRUCTURAL THK. REQUIRED.

SIDE FACE ELEVATION
6'–0" UNIT

UNIT DESIGNATION	STEM LENGTH	VOLUME OF CONCRETE / C.Y.	WEIGHT / LBS	
V X 6 X 6	6	Varies	Varies	
MB 2TON 79527G	2 EA			
REINFORCING	SIZE		LENGTH	QUANTITY
MK 401	#4		3'–0"	2
MK 410 (IF REQD)	#4		6'–4"	2
MK 411	#4		6'–7"	2
MK 412	#4		6'–9"	2
MK 413	#4		6'–11"	2
MK 414	#4		7'–1"	2
MK 4 VARIES	#4		VARIES	13
MK 5 VARIES	#5		VARIES	9

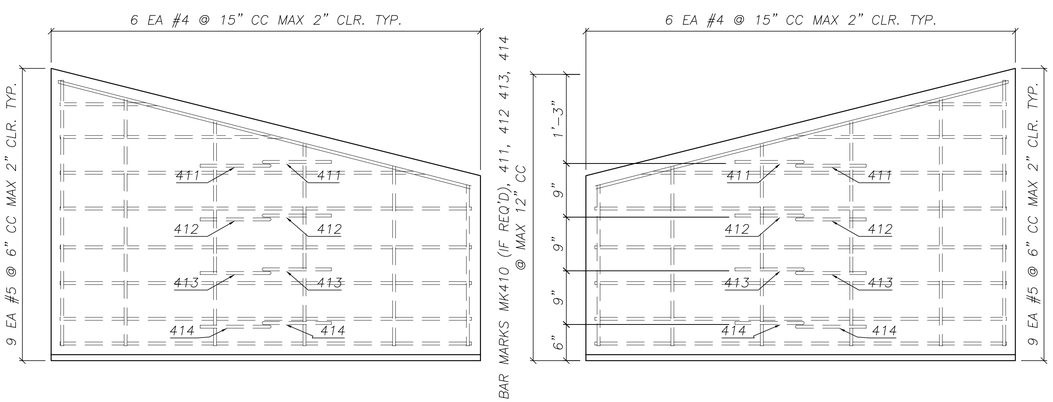

FRONT FACE REINFORCING
6'–0" SLOPED UNIT

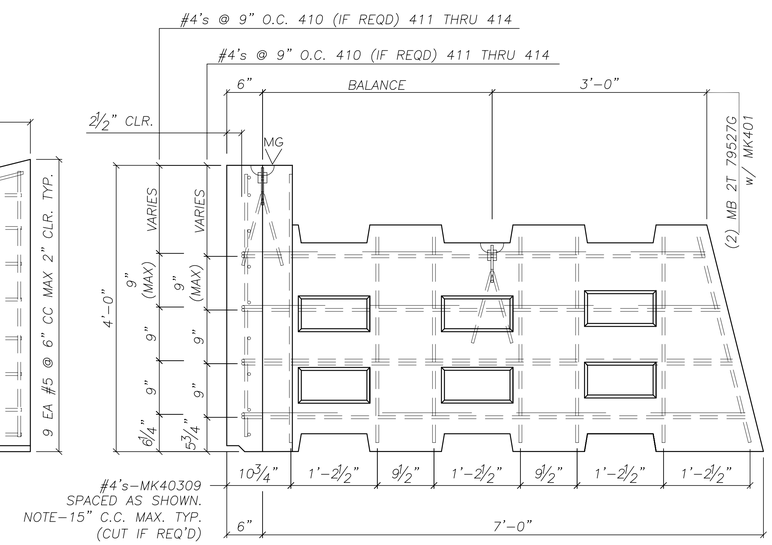

SIDE FACE REINFORCING
4'–0" HIGH SLOPED UNIT 6' STEM

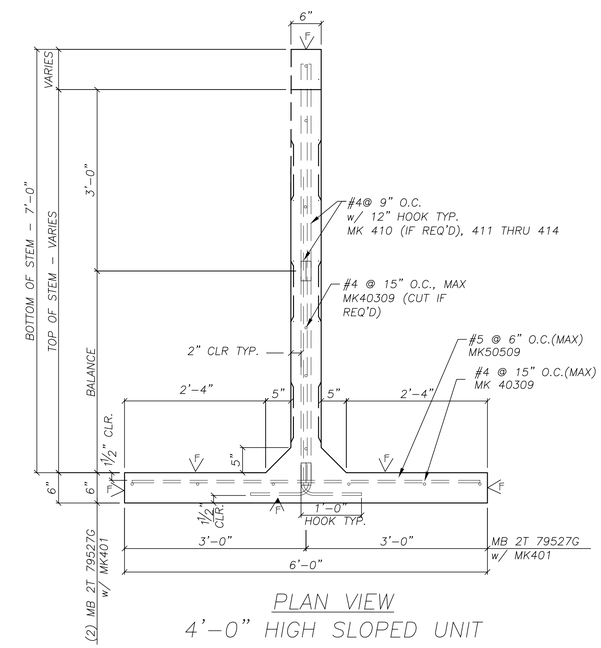

PLAN VIEW
4'–0" HIGH SLOPED UNIT

AUGUST 1, 2013

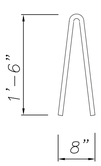

401

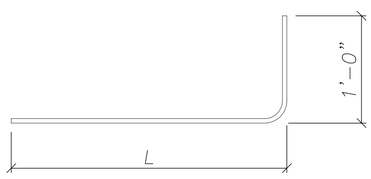

410–414

410–L = 6'–4"
411–L = 6'–7"
412–L = 6'–9"
413–L = 6'–11"
414–L = 7'–1"

NOTES:
- WORK TO CONFORM TO PADOT SPECS.
- CONCRETE TO BE 5000PSI @ 28 DAYS. fci – 3500 PSI
- WWF AND REBAR TO BE PER PADOT SPECS.
- REBARS TO BE EPOXY OR GALV.
- STORE AND SHIP ON EDGE WITH BLOCKING @ LIFTING LOCS.
- COLOR AND TEXTURE PER APPROVED SAMPLE.
- CHAMFER FACE EDGE ½" TYP.

J & R SLAW INC.
438 RIVERVIEW RD.,LEHIGHTON, PA 18235 PHONE (610) 852–2020 FAX (610) 852–2098

PENNSYLVANIA
DEPARTMENT OF TRANSPORTATION

PROJECT: J&R SLAW PRECAST "RETT WALL"	DESIGNED BY:	SCALE: nts	REV. :
DRAWING TITLE: 4X6X6 FULL HEIGHT SLOPED UNIT	DRAWN BY: JDK	DATE: 03–22–11	SHEET NO.: 11 OF 12

RETT–WALL, GEOMETRY & TYPICAL REINFORCING

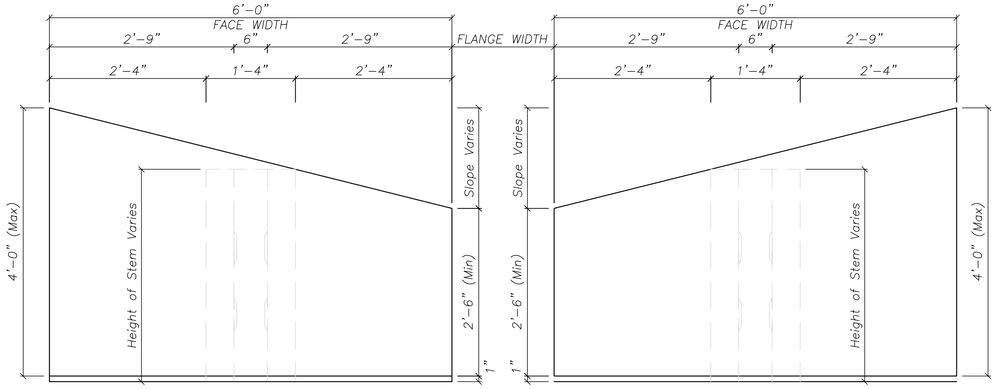

FRONT FACE ELEVATION
8'–0" UNIT

OR

FRONT FACE ELEVATION
8'–0" UNIT

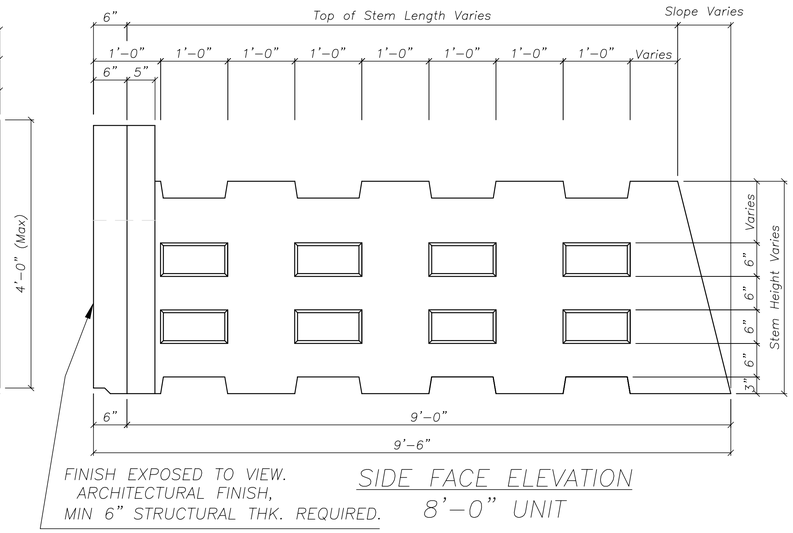

SIDE FACE ELEVATION
8'–0" UNIT

UNIT DESIGNATION	STEM LENGTH	VOLUME OF CONCRETE / C.Y.	WEIGHT / LBS	
V X 6 X 8	8	Varies	Varies	
MB 2TON 79527G	2 EA			
REINFORCING	SIZE		LENGTH	QUANTITY
MK 401	#4		3'–0"	2
MK 415 (IF REQD)	#4		8'–4"	2
MK 416	#4		8'–7"	2
MK 417	#4		8'–9"	2
MK 418	#4		8'–11"	2
MK 419	#4		9'–1"	2
MK 4 VARIES	#4		VARIES	15
MK 5 VARIES	#5		VARIES	9

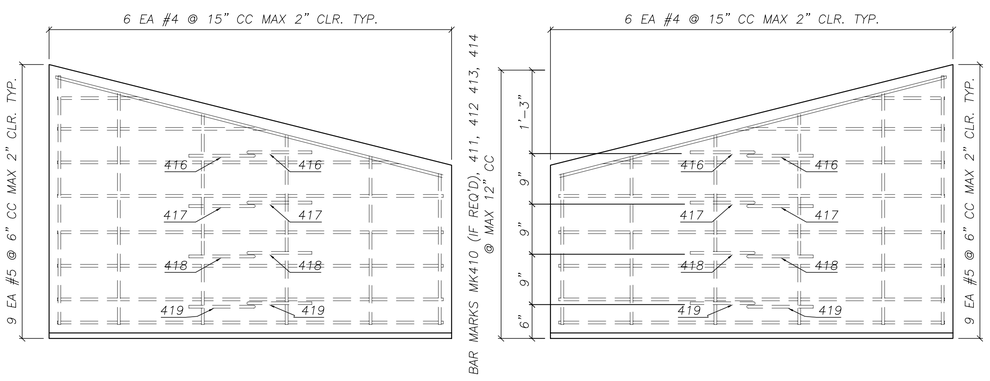

FRONT FACE REINFORCING
8'–0" SLOPED UNIT

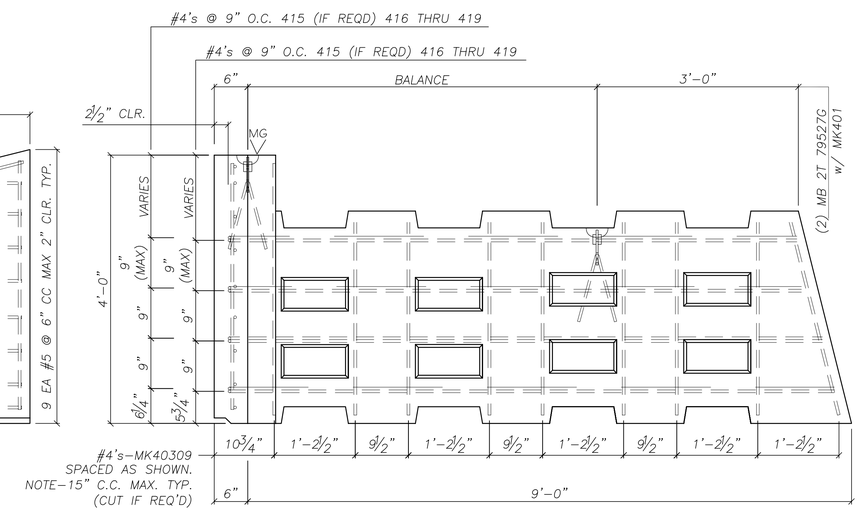

SIDE FACE REINFORCING
4'–0" HIGH SLOPED UNIT 8' STEM

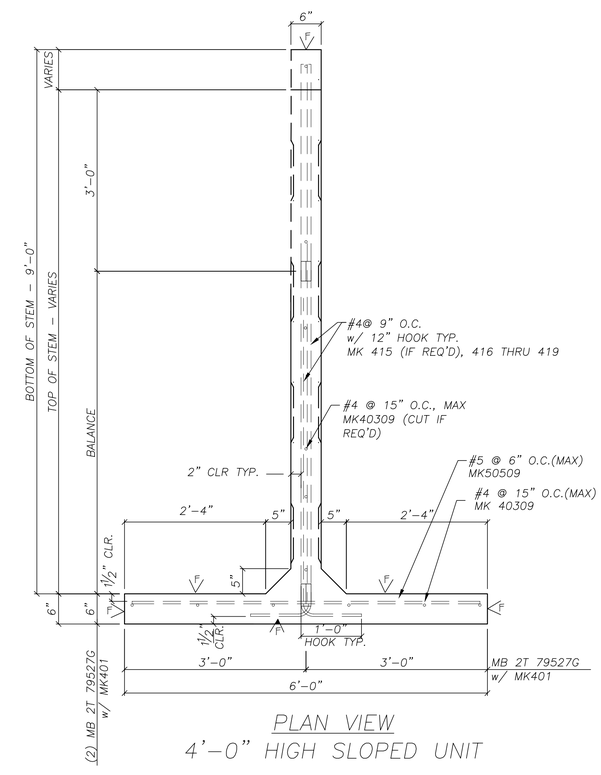

PLAN VIEW
4'–0" HIGH SLOPED UNIT

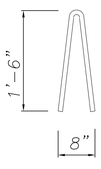

401

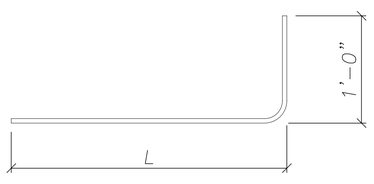

415–419
415–L = 8'–4"
416–L = 8'–7"
417–L = 8'–9"
418–L = 8'–11"
419–L = 9'–1"

NOTES:
- WORK TO CONFORM TO PADOT SPECS.
- CONCRETE TO BE 5000PSI @ 28 DAYS. fci – 3500 PSI
- WWF AND REBAR TO BE PER PADOT SPECS.
- REBARS TO BE EPOXY OR GALV.
- STORE AND SHIP ON EDGE WITH BLOCKING @ LIFTING LOCS.
- COLOR AND TEXTURE PER APPROVED SAMPLE.
- CHAMFER FACE EDGE ½" TYP.

AUGUST 1, 2013

J & R SLAW INC.
438 RIVERVIEW RD.,LEHIGHTON, PA 18235 PHONE (610) 852–2020 FAX (610) 852–2098

PENNSYLVANIA
DEPARTMENT OF TRANSPORTATION

PROJECT: J&R SLAW PRECAST "RETT WALL"	DESIGNED BY:	SCALE: nts	REV. :
DRAWING TITLE: 4X6X8 FULL HEIGHT SLOPED UNIT	DRAWN BY: JDK	DATE: 03–22–11	SHEET NO.: 12 OF 12

Product:

Item 8622-0215– Mechanically Stabilized Earth U-Wall System
Northeast Prestressed Products
PennDOT Drawing # 2010-221 PE

Approval Date:
September 6, 2013

Initiated By SOL:
483-13-11

Application/Use:

Mechanically Stabilized Earth U-Wall System, manufactured by Northeast Prestressed Products of Cressona, PA, has been approved for use as an "**As-designed**" or "**Alternate**" retaining wall. The use as an "As-designed" or "Alternate" or retaining wall is at the discretion of the District Executive.

Mechanically Stabilized Earth U-Wall System's usage has the following restrictions:

- Maximum Wall Height is 40 feet.
- Walls have not been approved for use in a stream environment.

This wall system meets both AASHTO and Design Manual, Part 4 design criteria.

Specifications:

Design/Material/Construction Specifications for this retaining wall system are specified on PennDOT Drawing #2010-221 PE, dated September 5, 2013, along with Mechanically Stabilized Earth U-Wall System details for your use.

Comments:

On those projects permitting the use of this system as an alternate, a special provision should be included in the proposal to indicate that the "Mechanically Stabilized Earth U-Wall System" as an alternate is allowed.

The contractor will be required to revise the pertinent contract drawings as per DM-4, PP 1.10 to show the usage of "Mechanically Stabilized Earth U-Wall System" and will also be required to reimburse the Department a fee of $1000 per design for the review and approval of the revision. This should be specified in the contract's Special Provisions.

Uwall GENERAL NOTES:

A. GENERAL:

a. Uwall takes full responsibility for engineering theory and calculation correctness and ensuring that all design assumptions are validated in the contract document either by needed details or construction specifications.

b. Uwall is to prepare design calculations and submittal drawings for the Uwall retaining walls in accordance with the guidelines specified herein. Submit to the engineer, for review and approval, four sets of working drawings and design calculations prepared in accordance with PennDOT Design Manual Part 4. Do not start work prior to approval of design and drawings.

c. Secure District Bridge Engineer and Geotechnical Engineer's approval before incorporating the Uwall Retaining Wall System into any project.

d. Generally Uwall retaining walls will be limited to 36' in height. Taller walls may be used with approval from the Chief Bridge Engineer.

e. All plan dimensions must be verified by the contractor. The project engineer must be notified of any discrepancies before the contractor begins with work.

f. Precautions must be taken where other building work, service trenches, garden beds, etc. may be excavated in front of the wall.

g. Where a safety fence is required it shall be set back a minimum of 40" from the top of the wall.

h. Contractor is to verify that all information shown on drawings has been thoroughly checked, complies with the contract documents and is adequate to meet the field conditions. Some dimensions and details may differ slightly from contract drawings to accommodate the manufacture or design process. Production will not commence until receipt of signed, approved shop drawings.

B. Reinforced Fill:

a. Fill material in the reinforced soil structure shall be granular and non-expansive and comply with the design parameters specified on the contract drawings and or specifications. The material shall be capable of being compacted in accordance with the specified requirements to form a stable mass of fill.

b. Fill material in the facing blocks and in the reinforced soil structure shall be free from organic matter, plastic, metal, rubber or other synthetic material inorganic contaminants, dangerous or toxic material, or material susceptible to combustion. The pH value of the fill shall be between 5 and 10.

c. Fill material shall be placed in layers that are no more than one foot, and each layer shall be thoroughly compacted to not less than 95% of the maximum dry density for standard compaction in accordance with AS 1289. E1.2. The fill moisture content shall be within ± 2% of the optimum moisture content for compaction.

d. The placement and compaction of fill material shall be carried out in a direction parallel to the face of the wall, and shall be completed in stages to follow closely the erection of the Uwall units and placement of geogrid reinforcing elements.

e. Construction vehicles and equipment weighing more than 1,100 lbs. shall be kept more than five feet away from the facing Uwall. Fill material closer than five feet behind the facing wall may be compacted using hand operated mechanical equipment, such as a vibrating plate, trench compactor or similar.

f. Where geogrid layers overlap such as at convex wall curves, provide a minimum of 3" of fill between the geogrid layers.

C. REINFORCING ELEMENTS (WHEN REQUIRED):

a. Geogrid reinforcing elements to be stored, transported, handled and placed to the manufacturers specification. They shall not be damaged or displaced during placement and compaction of the fill. Vehicles shall not be operated directly above reinforcing elements that are not covered by at least 4" of fill.

b. The geogrid soil reinforcement shall be laid behind the Uwall units and horizontally on compacted fill. the strong axis of the grid shall be laid perpendicular to the wall face. Pull geogrid taut, and anchor geogrid to compacted backfill prior to placing backfill. Slack in the geogrid shall be removed.

c. Do not allow fresh concrete, cement powder or lime to come into contact with the reinforcing elements.

D. DRAINAGE:

a. Uwall system shall be designed with a 6" perforated pipe underdrain and/or #57 drainage blankets based upon field conditions.

b. Uwall has a full height ⅜" gap backed by filter fabric at every vertical joint along the wall. The gap acts as a weephole and provides drainage for the reinforced soil mass.

c. Weepholes and #57 drainage blankets are required between the stems of Uwall located minimum of 12" above the finished ground line.

d. All subsurface drains to have outlets at low point and a positive drainage path. Provide subsoil drainage pipes with flushing points at high points and intermediate points.

E. DESIGN ASSUMPTIONS:

a. The design is to be based on soil parameters, foundation conditions, groundwater conditions, and loadings stated in the relevant specifications. Should actual conditions vary from those assumed, the project engineer should be notified prior to construction to determine if redesign of the proposed structure is required.

b. In the event that certain design parameters, stresses or specifications are in conflict, the following order of precedence governs:

1. Design requirements listed in "Special drawings and special design requirements" of the special provisions
2. Pennsylvania Department of Transportation current Design Manual Part 4
3. Pennsylvania Department of Transportation Standard Drawings
4. AASHTO LRFD Bridge Design Specifications, 5th Edition

c. In the event that a clear order of precedence cannot be established, or a difference in interpretation of the design cannot be resolved, the Chief Bridge Engineer will be the arbiter and his decision will be final.

d. Design in accordance with Load and Resistance Factor Design (LRFD) methodology.

e. Geogrid reduction factors:

e.a. Creep = 1.6
e.b. Installation damage = 1.3
e.c. Durability = 1.2

A. FOUNDATIONS:

a. The external wall stability, factored bearing capacity wall base shear is controlled by maximum permissible eccentricity ratio (soil), e/L = 0.25.

b. The foundation soil shall be proof-rolled prior to placement of fill and geosynthetic reinforcement.

c. The foundation soil shall be examined by the engineer to ensure that the actual foundation soil strength meets or exceeds the assumed design strength. Soil not meeting the required strength shall be excavated an replaced with approved material.

d. Wall embedment at toe of wall = 3' min.

G. DESIGN PARAMETERS:

a. Design of the reinforced soil structures are based upon the following parameters to be supplied on a job by job basis:

a.a. Granular fill material:

Provide crushed or natural sand, crushed or uncrushed gravel, blasted limestone, blasted sandstone, or any standard size coarse aggregate meeting the following gradation as determined in accordance with PTM616.

Sieve Size	Percent Passing
1/2 inch	100
No. 40	0–60
No. 200	0–10

Determination of fines content (minus #200 sieve material) must be by wash test according to PTM No. 100. Amount of Material Finer Than No. 200 Sieve in Aggregate. This is in addition to PTM No. 616. Sieve Analysis of Coarse and Fine Aggregate.

Have the backfill conform to all of the following additional requirements.

1. Furnish materials meeting the quality requirements of Type C coarse aggregate or better as specified in Section 703.2(a). Table B except furnish materials free of clay lumps, friable particles, coal and coke.Do not use metallurgical slag or cinders.

2. Furnish materials with a maximum plasticity index (PI) of 3 as determined in accordance with AASHTO T89 and T90.

3. Furnish materials exhibiting an angle of internal friction of not less than 34 degrees as determined in accordance with AASHTO T236 on the portion finer than No. 10 sieve compacted to 95% of PTM No. 106, Method B at optimum moisture content, except for coarse aggregate as specified in Section 703.2.

Direct shear testing may be performed on samples containing material larger than No. 10 sieve if the shear device conforms with AASHTO T236, Sections 5.4 and 5.5.

a.a. Reinforced fill
Effective internal friction angle =34 deg
Effective Cohesion = N/A
Moist unit weight = 90–120 pcf

a.b. Retained fill
Effective internal friction angle =30 deg
Effective Cohesion = N/A
Moist unit weight = 120 pcf

a.c. Foundation material
Effective internal friction angle = 30 deg
Effective cohesion = N/A
Moist unit weight =120 pcf

b. Surcharge loads applied to structure:

1. Live Load surcharge: 360 psf
2. Live Load construction surcharge as req'd.

c. The design assumes no water pressure acts on the wall.

H. MATERIAL NOTES:

1. Concrete Strength f'c = 4000 psi.
2. Reinforcing Steel: ASTM A615 (rebar) grade 60
   ASTM A185 (WWF) fy = 65 ksi
3. Designed per AASHTO LRFD and PennDOT DM4.
4. Uwall unit facing to have form or formliner finish.
5. Geogrid soil reinforcement: From Bulletin 15 approved supplier. Minimum strength as required by design and meeting the requirements of Publication 408 Section 738.
6. Marking: Clearly scribe or paint with waterproof paint on the rear surface of each Uwall unit, the date of manufacture, the lot production number and the piece mark.
7. Uwall units shall be deemed non-conforming for failure to meet the requirements previously outlined in these specifications. Units may be deemed non-conforming for the following reasons:
   - Failure to meet minimum reinforcing cover as indicated on the shop drawings
   - Cracking
   - Spalls or damage exceeding the the pre-approval limits of Publication 145
   - Failure to attain the required 28 day mix design strength, F'(28-day)

   Acceptance of non-conforming units shall be in accordance with Publication 408, Section 106.07 (c) 'Unacceptable Material Serviceable Precast or Prestressed Concrete, Fabricated Structural Steel and Aluminum'.
   Uwall units that cannot be repaired shall be rejected labeled 'Rejected for PennDOT Use' on the rear face or stem and stored away from all other units.
8. Provide materials and workmanship in accordance with PA DOT Publication 408, and supplements thereof, and/or special conditions as indicated or specified herein. Section 714 of Publication 408 applies to precast concrete products.
9. Manufactured in accordance with approved QA/QC plan.
10. Joint material: No filler is required in the vertical joints. Provide fiber expansion joint material conforming to AASHTO M213 for the horizontal joints as indicated. Cover all vertical joints on the back side of the face of the wall with geotextile fabric meeting the requirements of Section 735, Class 2, Type A. Provide asphalt joint material conforming to AASHTO M33 or neoprene rubber for the joints at or below high flood level.

PADOT DRAWING #2010-221 PE

All design assumptions are validated through either notes to the contractor or details on these drawings.

COMMONWEALTH OF PENNSYLVANIA REGISTERED PROFESSIONAL CHRISTOPHER M. VICK ENGINEER PE-0805554

PREPARED BY

ENGINEER

9/5/13
DATE

I certify that all assumptions made in designing this wall have been validated either through construction details or special notes and instructions to the fabricator, erector and contractor.

UNIVERSAL Uwall™

Uwall SYSTEM

COMMONWEALTH OF PENNSYLVANIA
DEPARTMENT OF TRANSPORTATION
BUREAU OF PROJECT DELIVERY

STANDARD
MECHANICALLY STABILIZED EARTH
Uwall SYSTEM
GENERAL NOTES

RECOMMENDED 9 / 5 / 2013

Thomas P Macioce
CHIEF BRIDGE ENGINEER

SHEET 1 OF 6

02/12/2013

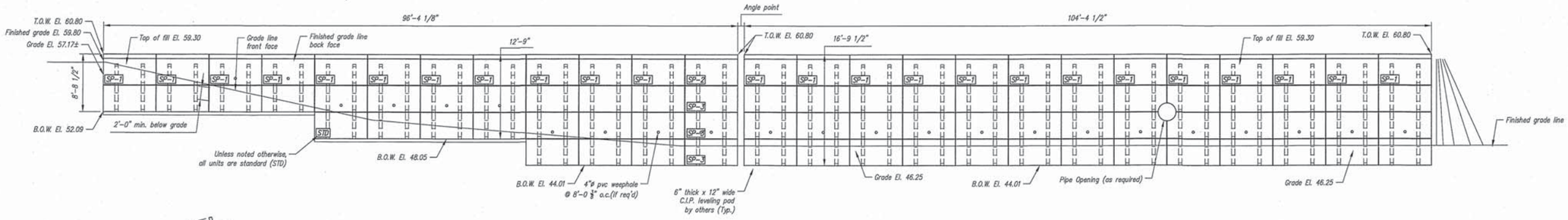

TYPICAL ELEVATION

TYPICAL STEP DETAIL

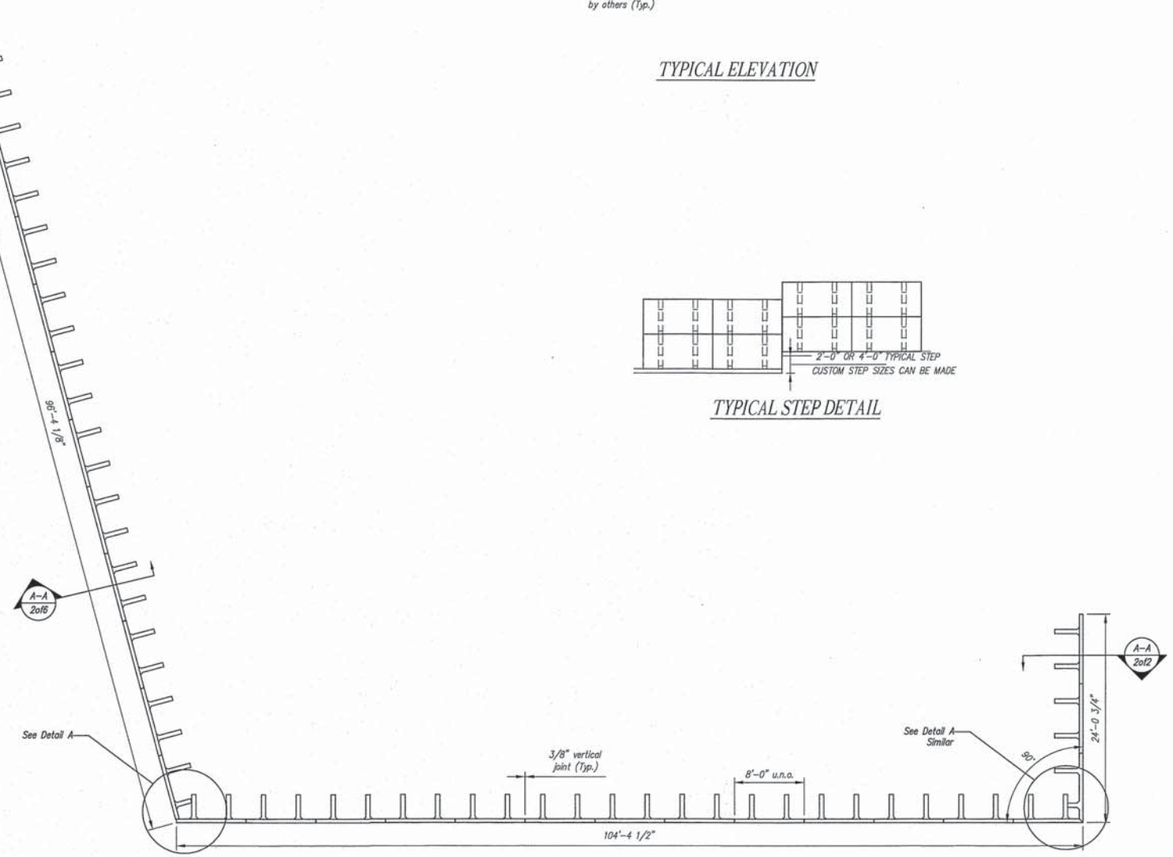

TYPICAL PLAN

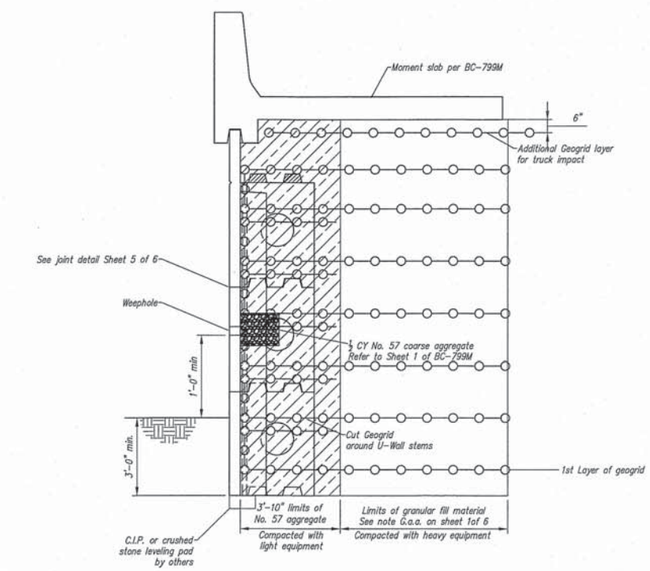

SECTION A-A, BARRIER - MOMENT SLAB DETAIL

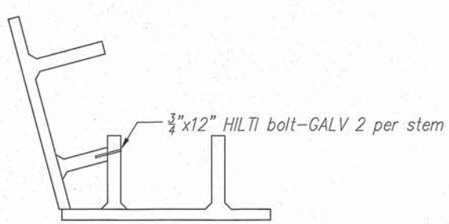

DETAIL A

PADOT DRAWING #2010-221 PE

UNIVERSAL Uwall™

Uwall SYSTEM

COMMONWEALTH OF PENNSYLVANIA
DEPARTMENT OF TRANSPORTATION
BUREAU OF PROJECT DELIVERY

STANDARD
MECHANICALLY STABILIZED EARTH
Uwall SYSTEM
PLAN – ELEVATION – BARRIER SECTION

RECOMMENDED 9 / 5 / 2013

SHEET 2 OF 6

06/07/2012

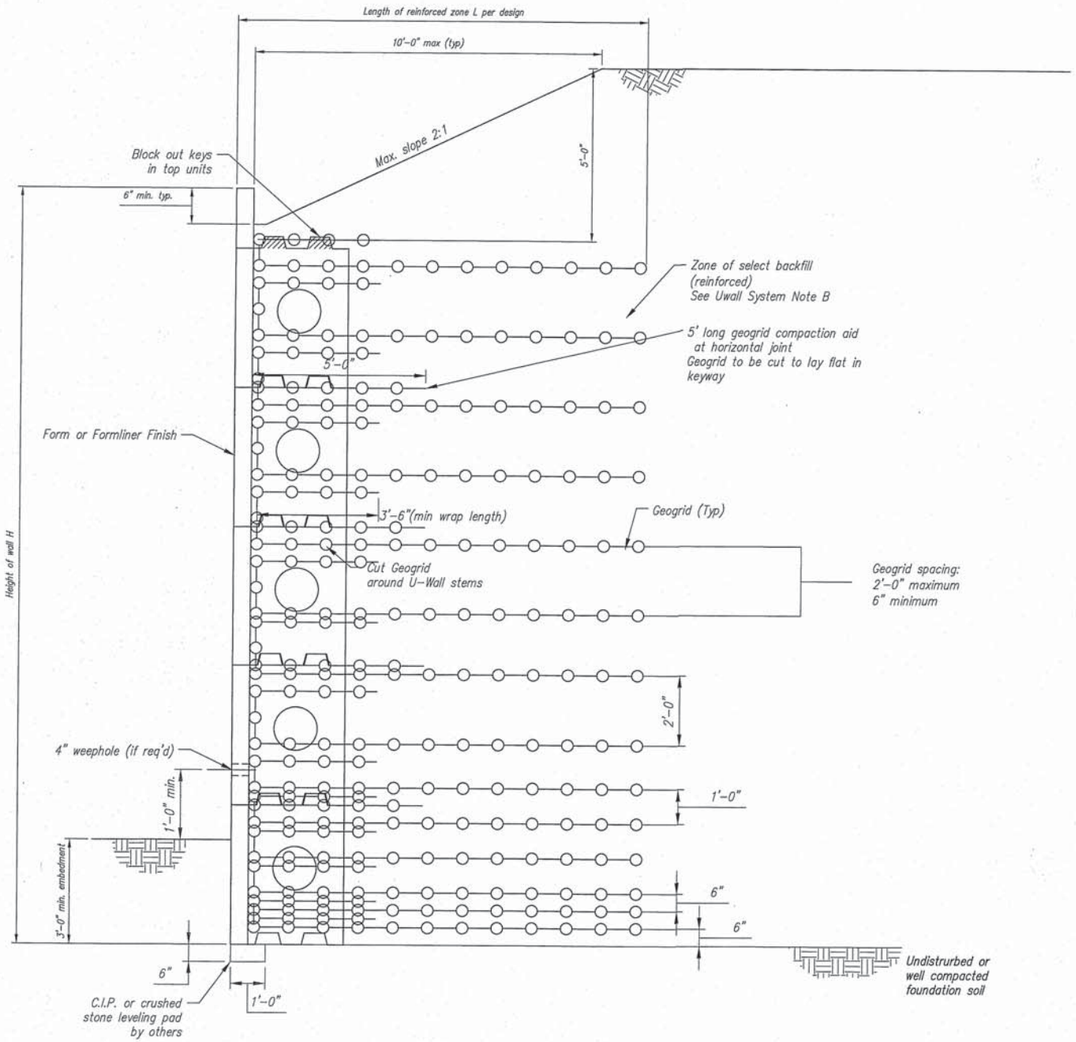

TYPICAL SECTION VERTICAL WALL

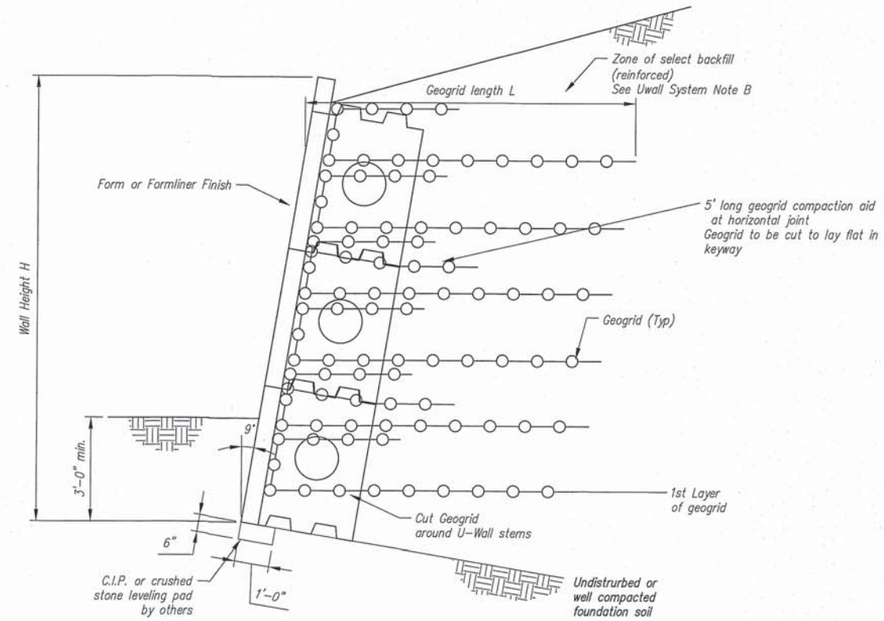

TYPICAL SECTION BATTERED WALL

PADOT DRAWING #2010-221 PE

UNIVERSAL Uwall™

Uwall SYSTEM

COMMONWEALTH OF PENNSYLVANIA
DEPARTMENT OF TRANSPORTATION
BUREAU OF PROJECT DELIVERY

STANDARD
MECHANICALLY STABILIZED EARTH
Uwall SYSTEM
TYPICAL CROSS SECTION

RECOMMENDED 9 / 5 / 2013

SHEET 3 OF 6

06/07/2012

TYPICAL CONSTRUCTION SEQUENCE

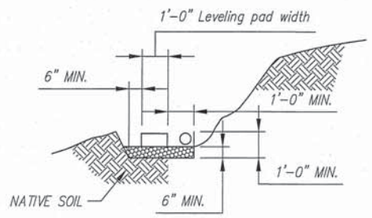

STEP 1:
- Excavate trench for level base.
- Provide leveling pad for base and wall.

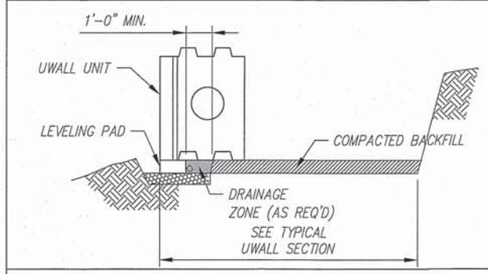

STEP 2:
- Check level of base course, lay first row of Uwall units.
- Check all line, grade, and curves.
- Place filter fabric at vertical joints.

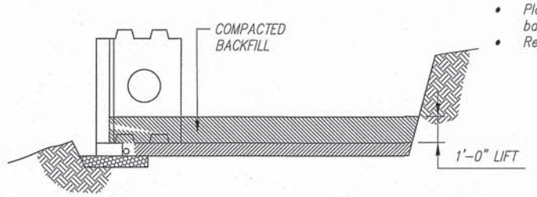

STEP 3:
- Place 8" loose lift and compact to 6" lift of backfill, ensuring backfill is level and uniform.
- Repeat step 3 until geogrid is required.

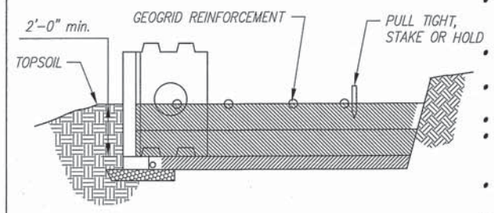

STEP 4:
- Place geogrid at proper elevation, ensuring to cut to the correct length (See Typical Uwall Section). Cut geogrid to fit around stems as required.
- Install geogrid with the roll direction (primary strength) perpendicular to the wall face.
- 5' should extend up the wall to later be wrapped before the next layer of geogrid is installed
- Place the next lift.
- Pull geogrid tight, keep tension applied until backfill is placed. Additional stakes may be used to maintain tension.
- Adjacent rolls of geogrid should be overlapped a minimum of 4".
- Finish backfill placement and compact.

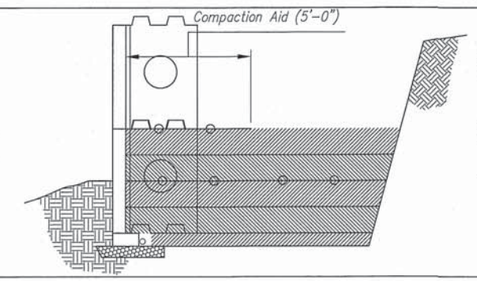

STEP 5:
- When the next layer of geogrid is required wrap the remaining geogrid from the previous layer back into the fill before placing
- Continue wall construction.
- Place additional Uwall units & lifts by repeating step 3.
- When the top of a unit is reached, a 5' long geogrid will be placed over the stem as a compaction aid. Cut around the male key in order for the grid to sit flat in the joint.

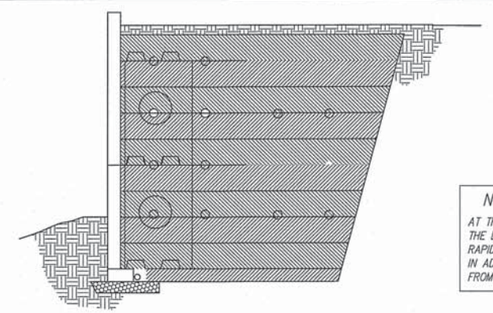

STEP 6:
- Repeat steps 3 thru 5, until wall is at required height.

NOTE

AT THE END OF EACH DAYS OPERATION, THE CONTRACTOR SHALL SLOPE THE LAST LAYER OF SELECT FILL AWAY FROM THE WALL FACING TO RAPIDLY DIRECT RUNOFF AWAY FROM THE WALL FACE.
IN ADDITION, THE CONTRACTOR SHALL NOT ALLOW SURFACE RUNOFF FROM ADJACENT AREAS TO ENTER THE WALL CONSTRUCTION SITE.

PADOT DRAWING #2010-221 PE

UNIVERSAL Uwall™

Uwall SYSTEM

COMMONWEALTH OF PENNSYLVANIA
DEPARTMENT OF TRANSPORTATION
BUREAU OF PROJECT DELIVERY

STANDARD
MECHANICALLY STABILIZED EARTH
Uwall SYSTEM
CONSTRUCTION SEQUENCE

RECOMMENDED 9 /5/ 2013

SHEET 4 OF 6

06/07/2012

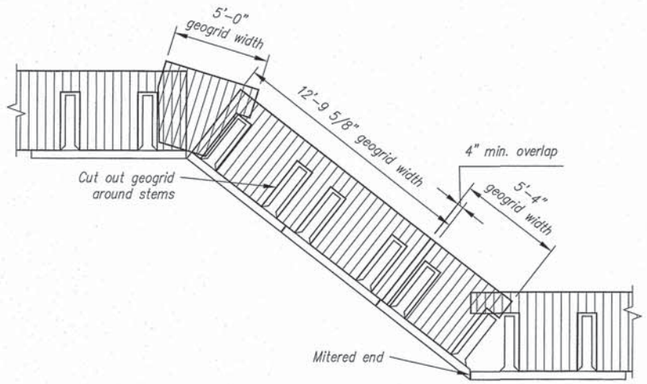

WALL ANGLE GEOGRID PLACEMENT DETAIL

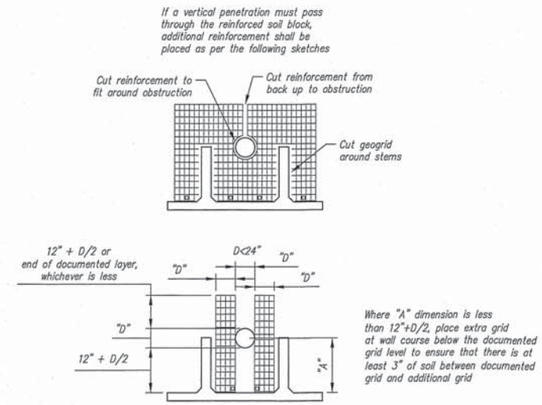

GEOGRID OBSTRUCTION DETAILS

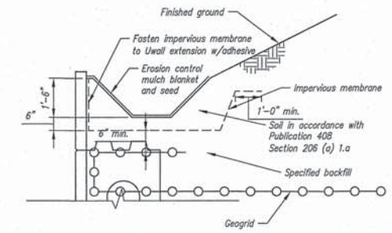

DRAINAGE DITCH DETAIL

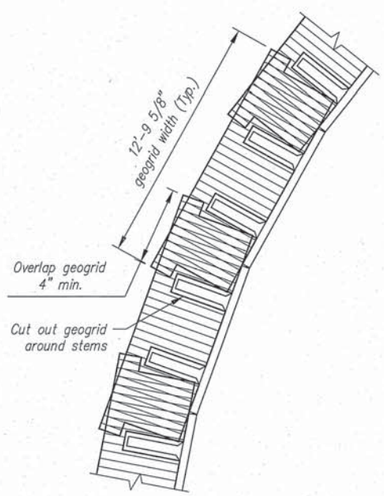

GEOGRID PLACEMENT ON RADIUS DETAIL

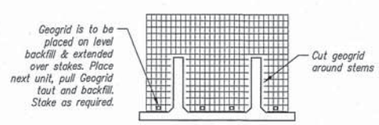

GEOGRID STAKE CONNECTION DETAIL

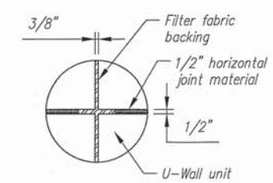

JOINT DETAIL

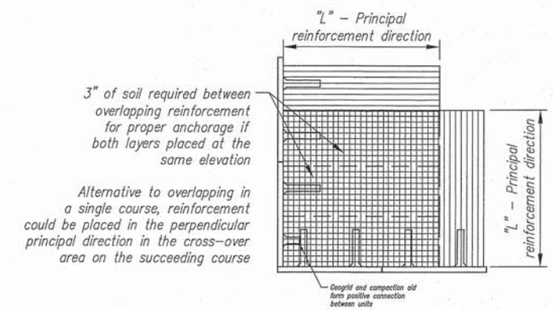

90° CORNER DETAIL

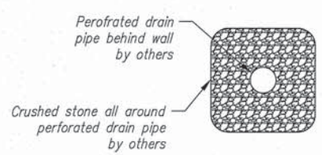

DRAIN PIPE DETAIL

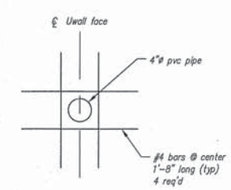

WEEPHOLE REINFORCEMENT

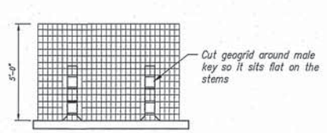

PLAN

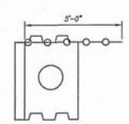

ELEVATION

COMPACTION AID DETAIL

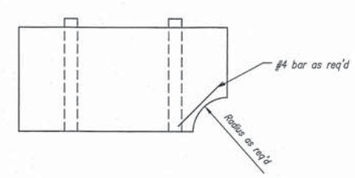

PIPE OPENING REINFORCEMENT

PADOT DRAWING #2010-221 PE

UNIVERSAL Uwall™

Uwall SYSTEM

COMMONWEALTH OF PENNSYLVANIA
DEPARTMENT OF TRANSPORTATION
BUREAU OF PROJECT DELIVERY

STANDARD
MECHANICALLY STABILIZED EARTH
Uwall SYSTEM
CONSTRUCTION DETAILS

RECOMMENDED 9 / 5 / 2013

SHEET 5 OF 6

06/07/2012

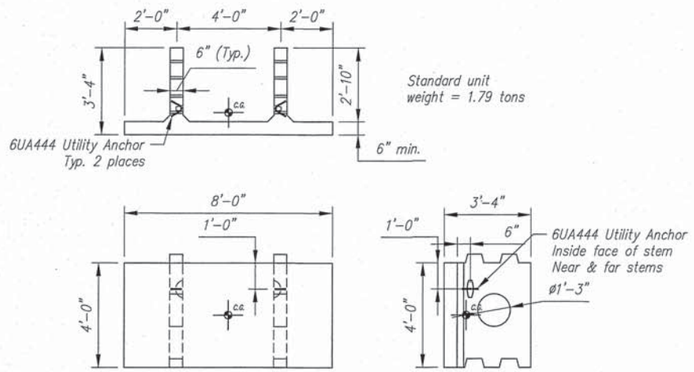

STANDARD U-WALL UNIT DETAILS

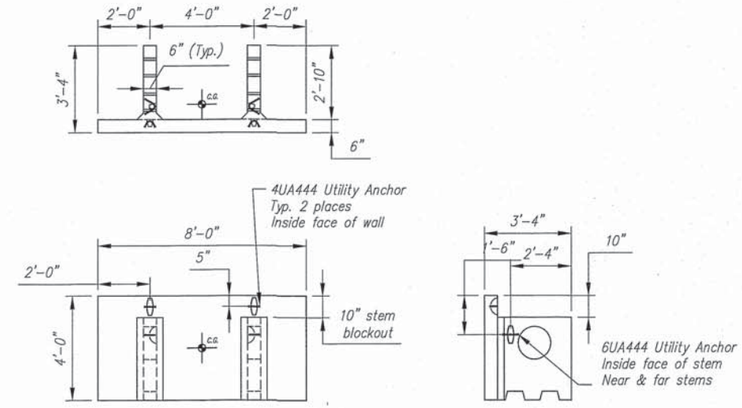

STANDARD U-WALL TOP UNIT DETAILS

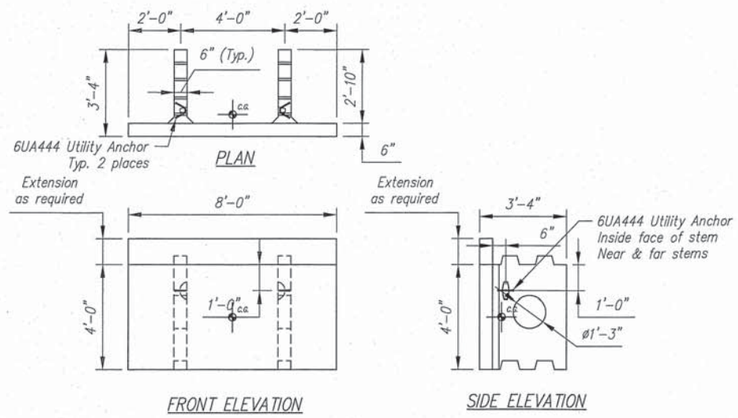

FRONT ELEVATION

SIDE ELEVATION

SPECIAL TOP UNITWITH EXTENSION DETAILS

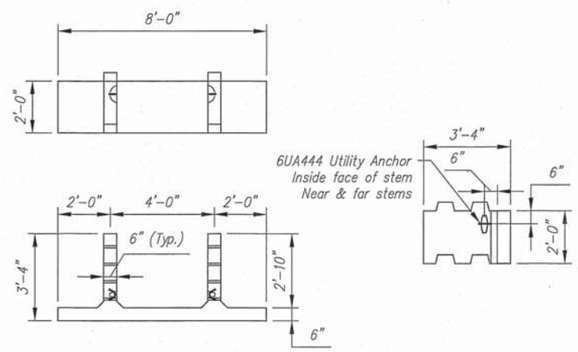

STANDARD 2 ft U-WALL STARTER BLOCK DETAILS

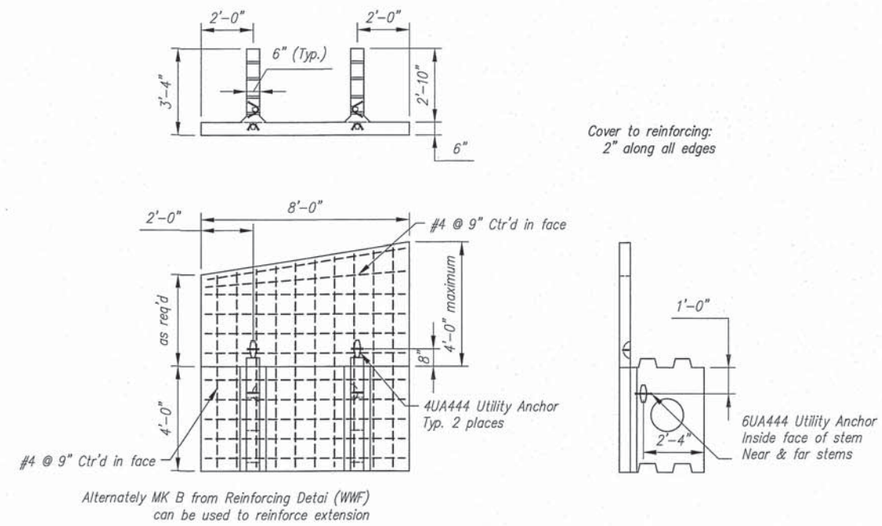

SPECIAL TOP UNITWITH SLOPING EXTENSION DETAILS

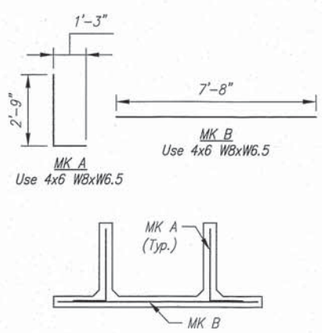

REINFORCING DETAILS (WWF)

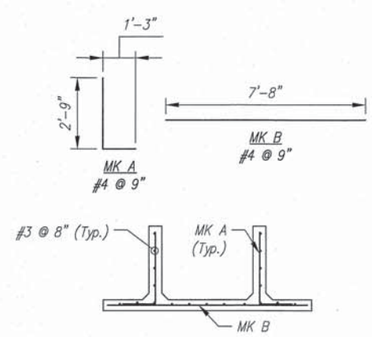

REINFORCING DETAILS (REBAR ONLY)

PADOT DRAWING #2010-221 PE

UNIVERSAL Uwall™

Uwall SYSTEM

COMMONWEALTH OF PENNSYLVANIA
DEPARTMENT OF TRANSPORTATION
BUREAU OF PROJECT DELIVERY

STANDARD
MECHANICALLY STABILIZED EARTH
Uwall SYSTEM
SHOP DRAWING DETAILS

RECOMMENDED 9 / 5 / 2013

SHEET 6 OF 6

06/07/2012

Product:

Item 9000-7011 - Metal Foundations for Overhead Sign Structures, Cantilever and Center-Mount Structures
Shaner Industries
PennDOT Drawing #13-602-BDTD

Approval Date:	**Initiated By SOL:**
October 31, 2013	483-13-13

Application/Use:

Metal Foundations for Overhead Sign Structures, Cantilever and Center-Mount Structures manufactured by Shaner Industries of Ambridge, PA have been approved to be used as an "alternate" to drilled concrete caissons and/or spread footings as specified on the attached standard drawing. The use as an "Alternate" or drilled concrete caissons or spread footings is at the discretion of the District Executive.

The usage of Metal Foundations for Overhead Sign Structures, Cantilever and Center-Mount Structures has the following restrictions:

- Maximum Sign Area: 740 square feet

This foundation meets both AASHTO and Design Manual, Part 4 design criteria.

Specifications:

Design/Material/Construction Specifications for this foundation are specified on PennDOT Drawing #13-602-BDTD dated October 31, 2013 of Metal Foundations for Overhead Sign Structures, Cantilever and Center-Mount Structures for your use.

Comment:

On those projects permitting the use of this metal foundation as an alternate, a special provision should be included in the proposal to indicate that the "Metal Foundations for Overhead Sign Structures, Cantilever and Center-Mount Structures" as an alternate is allowed.

The contractor will be required to revise the pertinent contract drawings as per DM-4M, PP 1.10 to show the usage of "Metal Foundations for Overhead Sign Structures, Cantilever and Center-Mount Structures" and will also be required to reimburse the Department a fee of $1000 per design for the review and approval of the revision. This should be specified in the contract's Special Provision.

FHWA approval has been secured for Metal Foundations for Overhead Sign Structures, Cantilever and Center-Mount Structures.

SHANER INDUSTRIES, LLC
METAL FOUNDATIONS
DESIGN SPECIFICATIONS.

1. General:

A. PENNDOT drawing 13-602-BDTD sheets 2 and 3, provide the design, fabrication and installation criteria for use of standard-sized Metal Foundations (MF) as alternates to the standard-sized concrete foundations shown on PENNDOT Drawing BC-741M, Sheets 2 through 4, for support of cantilever and center-mount sign structures.

B. Shaner Industries, takes full responsibility for engineering theory and calculations correctness and ensuring documents either by needed details or constructions specifications.

2. Design:

A. Drilled shafts (caissons).

Case 1 soil parameters (no site specific soil data)

Maximum design pressure	1.5 tons per square foot
Maximum design lateral displacement	0.5"
Modulus of subgrade reaction	K= 10.0 pounds per cubic inch
Cohesion	0 pounds per square foot
Unit weight of soil	100 pounds pre cubic foot
Angle of internal friction	25 degrees

Case 2 soil parameters (site specific soil data)

Maximum design pressure	1.5 tons per square foot
Maximum design lateral displacement	0.5"
Modulus of subgrade reaction:	
above the water table	K= 80.0 pounds per cubic inch
below the water table	K= 60.0 pounds per cubic inch
Cohesion:	
above the water table	15 pounds per square foot
below the water table	0 pounds per square foot
water table	5 feet below grade
Unit weight of soil	120 pounds pre cubic foot
Angle of internal friction	30 degrees

PENNSYLVANIA
DEPARTMENT OF TRANSPORTATION
RECOMMENDED
Thomas P Macioce
CHIEF BRIDGE ENGINEER
10/31/2013

B. The calculations demonstrate that the Metal Foundations have the same design capacities to resist loads imposed by signs as the concrete foundations they replace.

C. Changes to the design cannot be made unless Shaner Industries designs the changes and the Chief Bridge Engineer approves the changes.

D. If site specific soil information is not available, the metal foundations designed in accordance with case 1 soil design criteria on PennDOT drawing 13-602-BDTD sheet 2 of 3 must be used. If site specific soil information is available and is equal to or better than the case 2 soil design values on PennDOT drawing 13-602-BDTD, the metal foundations on sheet 3 of 3 may be used. Evaluation of the specific soil information to determine if material's properties are equal to or better than Case 2 should be performed by a qualified geotechnical engineer, registered in the Commonwealth of Pennsylvania. A copy of the soil evaluation should be submitted with the Metal Foundations design.

3. Use Guidelines:

A. The use of Metal Foundations should consider any site conditions that could effect these foundations including but not limited to site specific soil data, obstructions, voids, rock interference, and buried conduits or pipelines having cathodic protections.

B. Obtain the approval of the Distric Bridge and Geotechnical Engineers before incorporating the Shaner Foundations into a project.

SHANER INDUSTRIES, LLC.
METAL FOUNDATIONS
CONSTRUCTION SPECIFICATIONS.

1. Description:

This work includes the furnishing, constructing and installing of galvanized metal foundations.

2. Materials:

A. General- Provide materials and workmanship in accordance with the effective Pennsylvania Department of Transportation Specifications, Publication 408 Section (910, 1101, 1105 and special conditions) as specified in the contract documents and on the construction drawings.

Pipe - Section 1105.02 (a) 2.a, A500 (Grade C) or A53 (Grade B).
Plate - Section 1105.02(a) 2 & (a) 3.c, ASTM A709 or ASTM A572 (Grade 50).
Bolts, Nuts and Washers - Section 1101.4, Section 1105.02(d) or ASTM A193 (Gr. B7), ASTM A194 (Gr. 2H), ASTM F436. Galvanized and as required by pole manufacturer.
Galvanizing - Section 1105.02(s), ASTM A123 and ASTM A153.
Welding Materials - Section 1105.03(m), except use effective ANSI/AWS D1.1 for tubular sections.

B. Certifications - Section 106.03(b)3.

3. Fabrication:

Section 1105.03, ASTM and effective ANSI/AWS D1.1 as applicable. Fabricate the foundations to the minimum material thicknesses and dimensions shown on the drawings. Angles of welded structural connections shall be correct to within plus or minus 1 degree. Fabrication, finishing and bolt holes in accordance with Sections 1101 and 1105. Bolt holes shall be factory installed unless otherwise permitted by the Engineer.

4. Construction:

As shown on the standard drawings, approved by the Department and as follows:

A. General - Install the foundation in conformity with the lines, grades, fin orientations, dimensions and locations as shown on the approved drawings according to the contract documents.

Unless otherwise indicated, install the foundations in accordance with Section 1006.3(a) to within a plumbness tolerance equal to 2 percent of the foundation length and within 1 inch of the planned locations. Orient the foundations so that the anchor bolts and fins are within 2 degrees of their planned orientation, unless otherwise permitted by the Engineer. Install anchor bolts using a template equivalent to the base plate of the planned structure so that the center of the completed anchor bolt pattern is within 0.25 inches of the center of the top plate of the foundation. Install anchor bolt pattern to within 2 degrees of planned orientation, unless otherwise permitted by the Engineer.

Any damage to the galvanizing during handling or delivery or bolt hole drilling should be repaired in accordance with Section 1105.02(e).

B. Installation.

Anchor Method (B.1):
Drill a vertical hole, plumb and in the location of the required installed foundation as shown on the construction drawings. The diameter of the completed auger hole shall be no grather than the outside diameter of the required foundation pipe column. Field verify that the completed hole diameter is not larger than the outside diameter of the pipe column. Auger the hole a minimum of two feet deeper than the depth of the bottom of the installed foundation. Record the soil type and classification on the installation report. Install foundation immediately after auger hole is completed.
If rock or obstructions are encountered above the design tip elevation of the foundation, contact the Engineer. If necessary, install the foundation at an alternative location acceptable to the Engineer or replace it with a conventional concrete foundation at the original location, as directed by the Engineer at no additional cost to the Department. Modification of the foundation to accommodate obstructions will not be permitted.
Contact the Engineer if soil conditions are different from those used for the foundation design or if the preaugered hole collapses. If the preaugered hole collapses, that location is rejected.
Lower the installing anchor into the hole and place a centering collar in the hole, around the anchor. Place hydraulic cylinders over the anchor rod, on top of the anchor housing and lock into place with the high strength nut. Expand the hydraulic cylinders to the maximum required rod extension or hydraulic pressure for the installation anchor in use. Secure the anchor lock nut against the anchor housing.
Remove the hydraulic cylinders and the centering collar. Record the anchor length, installation pressure and rod extension on the installation log.
Extend the high strength anchor rod to accommodate the total length of the foundation and the hydraulic cylinders. Lift the foundation into position over the installation anchor. Foundation fin orientation must conform to the construction drawings. Position hydraulics on top of the foundation, attach to the anchor rod and lock into position with the high strength nut. Check and adjust orientation, alignment, plumbness and level of the foundation before the first stroke of the cylinders.
Expand the hydraulic cylinders in order to push the foundation into the earth. This may require several strokes of the cylinders to reach the proper elevation. Record the foundation installing forces on the installation report for each one foot of depth below the ground surface.
Release the anchor lock nut, remove the hydraulics and drop the anchor expanding cone below the anchor plates. Withdraw the installing anchor through the foundation column. The soils removed during the auger/drilling operations are then backfilled into the core of the metal foundation to a compacted condition acceptable to the representative. Incorporate installation of conduit and grounding connections, as appropriate.
The structure may be bolted to the foundation immediately after the foundation is installed, back-filled and approved by the inspector. Use the bolts or studs, washers, lock washers and nuts as specified and/or shown on the approved contract drawings.
When additional anchors are required to install the foundation, install the satellite anchors no closer than eight satellite hole diameters from the center of the foundation in the manner as the main anchor. Attach the anchors to spreader beams positioned above the hydraulic cylinders. Expand the cylinders against the beam that employ the resistance of the multiple anchors to install the foundation.
Remove the satellite anchors. Backfill and compact the satellite anchors holes using the material that was removed during the drilling operations. Tamp the back-fill in 4-inch lift to a stable condition equal to or grater than the density of the soil before the excavation.
Observe the installation of the foundation during the entire installation process. If obstructions are encountered that displace the foundation laterally or alter its vertical alignment from that of the predrilled hole, remove and inspect the foundation for damage. If the foundation is not damaged, either reinstall at an alternative location acceptable to the Engineer or replace it with a conventional concrete foundation at the original location, if directed by the Engineer. Field modifications of foundations are not permitted. .

Vibratory Method (B.2):
a) Equipment:
The size of the hydraulic vibratory hammer to be used for the installation of the metal foundation system is dependent on the design parameters of the metal foundation as well as the geotechnical soils condition of the intended project site. Normally the driving force of the hydraulic vibratory hammer during installation of the metal foundations is between 45 tons to 65 tons; occasionally hydraulic vibratory hammers with a driving force up to 100 tons are utilized.
The type of hydraulic vibratory hammer used for the installation of the metal foundation system will depend on the type of equipment that the hydraulic vibratory hammer will be attached to during installation such as ABI Mobilram MultiPurpose Machines, Excavators with built-in hydraulic capacity as well as self propelled hydraulic cranes in the 40 ton to 70 ton range. The Metal Foundation Adapter (MFA) is utilized to attach the metal foundation to the hydraulic vibratory hammer for proper installation. The MFA is engineered and designed for the specific project metal foundation(s) to be installed an is furnished with the metal foundation(s).

b) Predrilling of Soils:
Predrilling of the soils may be required depending on site specific data from the geotechnical report or if load testing of the metal foundation is specified. Predrilling may also be utilized to reduce the tonnage size of the hydraulic vibratory hammer to accommodate certain types of equipment based on jobsite conditions. Any soil spoils produced from the drilling operations will be placed back into the core of the metal foundation and will not require the soils to be hauled away.
c) Installation:
The MFA described above is bolted to the metal foundation which then enables the hydraulic vibratory hammer to be connected to the MFA to lift the metal foundation into position for the installation. This method of connection enables the metal foundation to be oriented, aligned and plumbed before activating the hydraulic vibratory hammer to begin the installation of the metal foundation. During the installation process the vibratory system is interrupted periodically to monitor vertical alignment and orientation. The installation of the metal foundation is considered complete once the metal foundation has reached the design depth below grade; the MFA is then removed from the metal foundation and prepared to be mounted to another metal foundation for installation.

Testing procedures (B.3):
This testing procedure is to apply only and exclusively to the Metal Foundations vibratory method of installation described in paragraph (B.2). Upon installation of the new metal foundations, a compression load test will be performed to verify the design axial capacity of the Metal Foundation in accordance with PENNDOT Publication 408, Section 1005.3 (G) 1.
The foundation will be subject to a compression force up to its axial design load, held for ten (30) minutes and verified that no settlement is recorded, the compressive force will then be increased up to 125% of the design axial load, held for ten (30) minutes and verified that no more than 0.25 inches of penetration is recorded. Any value exceeding the allowables will be considered test failure.
The equipment used to perform the test will conform to the description in paragraph (B.1).
For projects with multiple foundations at the same site, the first two (2) installed foundations need to be tested in accordance with the above procedures to verify the actual foundation capacity prior to installing the subsequent foundations. If either test is considered failure, use anchor method (B1) to install the remaining foundations. For single foundation project, the compression load test is always required to verify the foundation has achieved the design capacity. If the test is considered failure, Item 2), part b) of Section B.4 shall apply.
Single anchor system procedure:
A hole of a depth minimum two feet deeper than the installed foundation will be drilled inside the foundation core pipe.
The anchor/rod/centering collar is lowered into the augered/drilled opening with a crane, the hydraulic cylinders are then placed over the foundation top plate and locked into place with the high strength nut. The hydraulic cylinders are then expanded to engage the anchor and apply the compressive force at the top of the foundation. Previously installed dial gauge system will monitor the compressive force applied to the foundation and the vertical movement recorded at the various stages of the test. all the equipment will be romoved at test completion and any soil augered during the drilling operations will be placed inside the hole.
Depending on the soil type and axial design loads, a double anchor satellite system could be used to perform the required test; in this case two satellite holes will be auger/drilled at a safe distance (approximately 3 times the foundation diameter) from the installed foundation, the anchor/rod/centering collar is lowered into the augered/drilled opening with a crane, the hydraulic cylinders are then placed over the anchor rod and locked into place with the high strength nut. The hydraulic cylinders are then expanded to the maximum required rod extension or hydraulic pressure for the anchor being used for the testing.The hydraulic cylinders are then removed from the satellite anchors and placed over the foundation top plate. A cross beam will then be placed over them and secured to the anchor rods with high strength nuts. The hydraulic cylinders are then expanded to obtain the requored test compressive force and settlements recorded at each stage.

General (B.4):
1) Immediately after the metal foundation is installed and approved by the project inspector, the structures to be supported may be attached to the metal foundation. Use the anchor stud assemblies as specified and/or shown on the approved metal foundation project drawings.
2) If rock is found to be present after the metal foundation is fabricated and delivered to the project site, it shall be determined from field verification the depth that the rock layer is encountered below finished grade and the depth at which the rock layer ends below finished grade. The metal foundation for those locations will be:
a) The location of the metal foundation, with approval from the Engineer, will be relocated as directed by the Department to avoid the rock layer.
b) Replace the proposed metal foundation with a conventional concrete foundation at the original location, as directed by the Engineer at no additional cost to the department.
c) Modification of the metal foundation or supported structure to accommodate obstructions or misinstallation will not be permitted.

C. Reports - An installation report supplied by the manufacturer must be completed and submitted to the Department for each installation. The report must be completed and signed by the installer and signed by a Department Inspector and shall include the visual classifications of the soils encountered, identification number of the foundation, the installer's name and company, the location of the installation, the date of the installation, the foundation size, the calibration dates of the equipment, the installation forces required at measured depths, any problem encountered and their resolution.

D. Rejection of Units - Units that are damaged or do not conform to the above specifications may be rejected. Replace or repair rejected units at no additional costs in a manner acceptable to the Engineer. Attempting to pull up the over-pushed or over-vibrated metal foundation to match the proposed foundation elevation will not be permitted and the unit may be rejected.

E. Technical Assistance - In the event of unusual problems or special circumstances, provide a qualified designer/installer of metal foundations at the project site to assist the Contractor and Engineer.

SHEET 1 OF 3

COMMONWEALTH OF PENNSYLVANIA
REGISTERED PROFESSIONAL
JASON R. TRUCKENBROD
ENGINEER
No. 51728-E
Oct. 28, 2013

THIS DRAWING IS THE PROPERTY OF "SHANER INDUSTRIES", IT IS MADE FOR EXCLUSIVE USE OF "SHANER INDUSTRIES". NEITHER THE DRAWING OR REPRODUCTION OF IT NOR INFORMATION DERIVED FROM IT IS TO BE GIVEN TO OTHERS WITHOUT THE EXPRESSED CONSENT OF "SHANER INDUSTRIES". NO USE IS TO BE MADE OF IT WHICH IS OR MAY BE IN ANY WAY INJURIOUS TO AND/OR CONTRARY TO THE INTERESTS OF "SHANER INDUSTRIES". "SHANER INDUSTRIES" MAKES NO REPRESENTATIONS OR WARRANTIES AS TO ANY USE OF THIS DRAWING OTHER THAN THAT OF WHICH "SHANER INDUSTRIES" ORIGINALLY INTENDED. THIS FOUNDATION TYPE IS COVERED UNDER U.S. PATENT No 5,570,975.

STATE: PA
JOB NUMBER:
PROJECT: COMMONWEALTH OF PENNSYLVANIA, DEPARTMENT OF TRANSPORTATION, BUREAU OF PROJECT DELIVERY.
DESCRIPTION: METAL FOUNDATIONS FOR OVERHEAD SIGN STRUCTURES, CANTILEVER AND CENTER-MOUNT STRUCTURES.

SHANER INDUSTRIES
930 GLENWOOD AVE.
AMBRIDGE, PA 15003
1-855-356-3825
T 724-266-1066
F 724-266-1006

CLIENT:
DRAWN BY: DL
SCALE: N.T.S.
CHECKED BY: CH
DATE: 10-18-2013
DRAWING NUMBER: 13-602-BDTD

METAL FOUNDATIONS - ALL RIGHTS OF THIS TECHNOLOGY AND DESIGN ARE PROPERTY OF SHANER INDUSTRIES. UNAUTHORIZED USE OF THIS CONTENT WITHOUT EXPRESS WRITTEN PERMISSION IS SUBJECT TO LEGAL ACTION AND WILL BE PURSUED TO THE FULLEST EXTENT.

REV. 1 CHANGED Metal Foundations, LLC to Shaner Industries, LLC.

METAL FOUNDATION DATA FOR DRILLED SHAFTS (CAISSON) - CASE I SOIL PARAMETERS (NO SITE SPECIFIC SOIL DATA)

CANTILEVER & CENTER-MOUNT	TOP PLATE		STUDS/BOLTS		PIPE DIMENSION				FIN DIMENSION							WEIGHT NON GALVANIZED	GROUND LOAD REACTIONS			
COLUMN SIZE	T	SIZE TYPE	QTY.	STUDS DIAMETER	DIAMETER & WALL	LENGTH	WELD PIPE-TOP PLATE	YIELD KSI	WIDTH & THICKNESS	LENGTH	WELD FIN-PIPE + REINFORCING		WELD FIN-TOP PLATE + REINFORCING		YIELD KSI	LBS	OVERTURNING MOMENT - KIP/FT	TORSIONAL MOMENT - KIP/FT	SHEAR KIPS	AXIAL KIPS
480 SF MAX. SIGN AREA																				
24x.375	2"	Y	8	Ø2"	24"Ø -0.375" WALL	30'- 0"	1/4"	35	21" - 0.625"	20'- 0"	FULL PEN.		FULL PEN.	1/8"	36	6,735	276.68	85.00	10.00	7.00
26x.375	2.25"	Y	8	Ø2.25"	24"Ø -0.375" WALL	32'- 0"	1/4"	35	21" - 0.625"	24'- 0"	FULL PEN.	1/16"	FULL PEN.	1/8"	36	7,827	301.22	98.33	12.00	8.00
24x.500	2.25"	Y	8	Ø2.25"	24"Ø -0.5" WALL	34'- 0"	3/8"	35	24" -0.625"	26'- 0"	FULL PEN.	1/4"	FULL PEN.	1/8"	36	9,953	355.32	94.16	14.00	9.00
24x.688	2.375"	Y	8	Ø2.25"	24"Ø -0.5" WALL	36'- 0"	3/8"	35	24" - 0.75"	26'- 0"	FULL PEN.		FULL PEN.	5/16"	36	11,307	403.18	65.00	14.00	10.00
26x.500	2.5"	Y	8	Ø2"	24"Ø -0.5" WALL	36'- 0"	3/8"	35	24" - 0.75"	25'- 0"	FULL PEN.		FULL PEN.	5/16"	36	11,145	377.83	166.66	15.00	10.00
26x.562	2.75"	Y	8	Ø2.25"	24"Ø -0.5" WALL	37'- 0"	3/8"	35	24" - 0.75"	29'- 0"	FULL PEN.		FULL PEN.	5/16"	36	12,385	434.69	166.66	15.00	11.00
24x.938	2.5"	X	16	Ø2"	24"Ø -0.5" WALL	38'- 6"	3/8"	35	24" - 0.75"	30'- 0"	FULL PEN.		FULL PEN.	5/16"	36	12,632	452.48	244.16	15.00	13.00
740 SF MAX. SIGN AREA																				
24x.375	2"	Y	8	Ø2"	24"Ø -0.375" WALL	33'- 0"	1/4"	35	21" - 0.625"	24'- 0"	FULL PEN.	1/16"	FULL PEN.	1/8"	36	7,731	259.35	67.50	15.00	9.00
26x.375	2.25"	Y	8	Ø2.25"	24"Ø -0.5" WALL	34'- 6"	3/8"	35	24" -0.625"	26'- 0"	FULL PEN.	1/4"	FULL PEN.	1/8"	36	10,112	308.07	99.17	17.00	10.00
24x.500	2.25"	Y	8	Ø2.25"	24"Ø -0.5" WALL	38'- 0"	3/8"	35	24" - 0.75"	31'- 0"	FULL PEN.	1/8"	FULL PEN.	5/16"	36	12,705	357.56	92.50	20.00	11.00
24x.688	2.5"	Y	8	Ø2.25"	24"Ø -0.5" WALL	40'- 0"	3/8"	35	28" - 0.75"	31'- 0"	FULL PEN.	5/16"	FULL PEN.	5/16"	36	14,244	435.39	97.50	21.00	13.00
26x.500	2.5"	Y	8	Ø2"	24"Ø -0.5" WALL	36'- 0"	3/8"	35	28" - 0.75"	26'- 6"	FULL PEN.	5/16"	FULL PEN.	5/16"	36	12,506	350.97	175.00	20.00	11.00
26x.562	2.75"	Y	8	Ø2.25"	24"Ø -0.5" WALL	41'- 0"	3/8"	35	27" - 0.75"	34'- 0"	FULL PEN.	1/4"	FULL PEN.	5/16"	36	15,096	446.65	140.83	21.00	13.00
24x.938	3"	X	16	Ø2"	24"Ø -0.562" WALL	44'- 0"	7/16"	35	28" - 1"	37'- 0"	FULL PEN.		FULL PEN.	3/8"	36	20,669	605.35	250.00	22.00	16.00
24x1.219	3"	X	16	Ø2.25"	24"Ø -0.562" WALL	45'- 0"	7/16"	35	30" - 1"	35'- 0"	FULL PEN.		FULL PEN.	3/8"	36	20,956	651.48	250.00	22.00	18.00

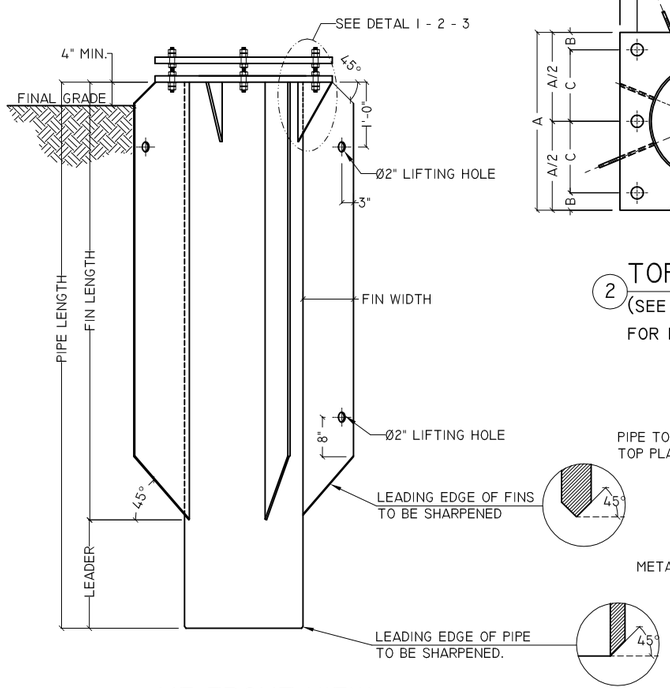

1 MF FRONT VIEW

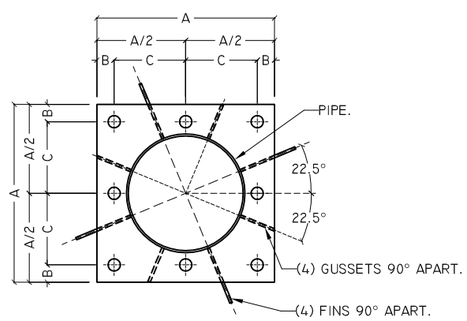

2 TOP PLATE TYPE 'Y'
(SEE BC-741M, SHEET 4 OF 6 FOR DIMENSIONS A,B & C)

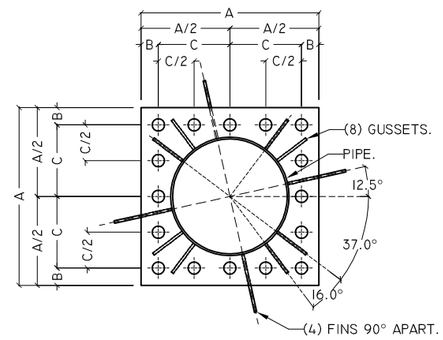

3 TOP PLATE TYPE 'X'
(SEE BC-741M, SHEET 4 OF 6 FOR DIMENSIONS A,B & C)

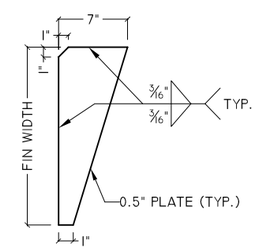

4 GUSSETS DETAIL

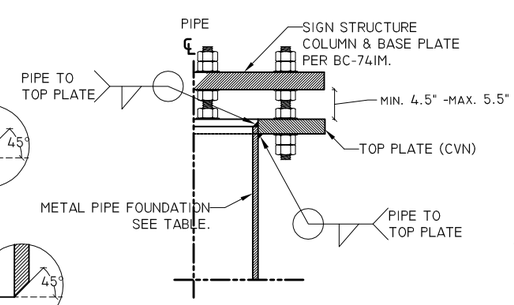

5 DETAIL 1
(TOP PLATE WELDS)

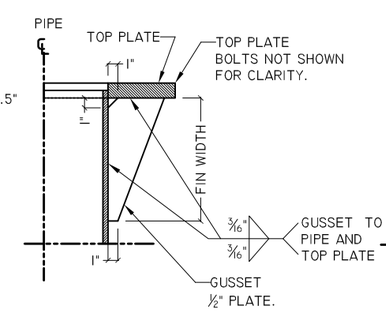

6 DETAIL 2
(GUSSET WELDS)

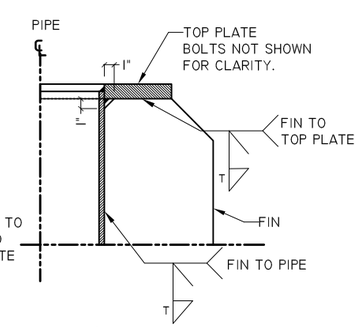

7 DETAIL 3
(FIN WELDS)

COMMONWEALTH OF PENNSYLVANIA
REGISTERED PROFESSIONAL
JASON R. TRUCKENBROD
ENGINEER
No. 51728-E

Oct. 28, 2013

NOTES:

GENERAL:

1. THIS STANDARD IS NOT APPLICABLE TO DMS STRUCTURES.

FABRICATION TOLERANCES:

1. UNLESS OTHERWISE SPECIFIED ALL FABRICATION TOLERANCES ARE:
   LINEAR TOLERANCES - 0"/±1/8"
   ANGULAR TOLERANCES - 0°/±1°.

INSTALLATION TOLERANCES & METHOD:

1. PLUMBNESS WITHIN 0.5" OVER FOUNDATION FULL LENGTH.
2. CENTER OF ANCHOR BOLT PATTERN WITHIN 0.25" OF FOUNDATIONS CENTER.
3. CENTER OF FOUNDATION WITHIN 0.5" OF PLANNED LOCATION IN ALL DIRECTIONS.
4. FIN ALIGNMENT WITHIN 2° OF DESIGN ORIENTATION UNLESS OTHERWISE PERMITTED BY ENGINEER.
5. FOUNDATION INSTALLED IN CONFORMITY WITH LINES, GRADES, FIN ORIENTATIONS AND LOCATION SHOWN ON CONTRACT DRAWINGS.
6. PRE-DRILLING MAY BE REQUIRED. SHANER INDUSTRIES RESERVE THE RIGHT TO SELECT THE PREFERRED METHOD OF INSTALLATION FOR EACH SITE AND FOUNDATION TYPE.

MATERIAL NOTES: (PROVIDE MILL CERTS ON ALL MATERIALS)

1. PIPE — ASTM A53 - GR B, 35 KSI.
2. FINS — ASTM A36 - GR 36.
3. PLATE — ASTM A36 - GR 36.
4. FABRICATION — FABRICATE IN ACCORDANCE WITH AASHTO AWS D1.1M/D1.1-2008 AND PUBLICATION 408, SECTION 1105. FABRICATE IN A BULLETIN 15 APPROVED SHOP HAVING SBR CERTIFICATION.
5. FINISH — H.D. GALVANIZED TO ASTM A123.

FOUNDATION HARDWARE:

1. STUDS — 18" L., ASTM A193 GR. B7 - 105 KSI MIN..
2. NUTS — ASTM A194 GR. 2H.
3. WASHERS — ASTM F436.
4. FINISH — H.D. GALVANIZED TO ASTM A153.

METAL FOUNDATIONS - ALL RIGHTS OF THIS TECHNOLOGY AND DESIGN ARE PROPERTY OF SHANER INDUSTRIES. UNAUTHORIZED USE OF THIS CONTENT WITHOUT EXPRESS WRITTEN PERMISSION IS SUBJECT TO LEGAL ACTION AND WILL BE PURSUED TO THE FULLEST EXTENT.

10/31/2013

THIS DRAWING IS THE PROPERTY OF "SHANER INDUSTRIES", IT IS MADE FOR EXCLUSIVE USE OF "SHANER INDUSTRIES". NEITHER THE DRAWING OR REPRODUCTION OF IT NOR INFORMATION DERIVED FROM IT IS TO BE GIVEN TO OTHERS WITHOUT THE EXPRESSED CONSENT OF "SHANER INDUSTRIES". NO USE IS TO BE MADE OF IT WHICH IS OR MAY BE IN ANY WAY INJURIOUS TO AND/OR CONTRARY TO THE INTERESTS OF "SHANER INDUSTRIES". "SHANER INDUSTRIES" MAKES NO REPRESENTATIONS OR WARRANTIES AS TO ANY USE OF THIS DRAWING OTHER THAN THAT OF WHICH "SHANER INDUSTRIES" ORIGINALLY INTENDED. THIS FOUNDATION TYPE IS COVERED UNDER U.S. PATENT No 5,570,975.

STATE: PA
JOB NUMBER:
PROJECT: COMMONWEALTH OF PENNSYLVANIA, DEPARTMENT OF TRANSPORTATION, BUREAU OF PROJECT DELIVERY.
DESCRIPTION: METAL FOUNDATIONS FOR OVERHEAD SIGN STRUCTURES, CANTILEVER AND CENTER-MOUNT STRUCTURES.

SHANER INDUSTRIES
930 GLENWOOD AVE.
AMBRIDGE, PA 15003
1-855-356-3825
T 724-266-1066
F 724-266-1006

CLIENT: PENNDOT
DRAWN BY: DL
SCALE: N.T.S.
CHECKED BY: CH
DATE: 10-18-2013
DRAWING NUMBER: 13-602-BDTD

METAL FOUNDATION DATA FOR DRILLED SHAFTS (CAISSON) - CASE 2 SOIL PARAMETERS (SITE SPECIFIC SOIL DATA)

CANTILEVER & CENTER-MOUNT	TOP PLATE		STUDS/BOLTS		PIPE DIMENSION				FIN DIMENSION						WEIGHT NON GALVANIZED	GROUND LOAD REACTIONS			
COLUMN SIZE	T	SIZE TYPE	QTY.	STUDS DIAMETER	DIAMETER & WALL	LENGTH	WELD PIPE-TOP PLATE	YIELD KSI	WIDTH & THICKNESS	LENGTH	WELD FIN-PIPE + REINFORCING		WELD FIN-TOP PLATE + REINFORCING		YIELD KSI	LBS	OVERTURNING MOMENT - KIP/FT	TORSIONAL MOMENT - KIP/FT	SHEAR KIPS	AXIAL KIPS
480 SF MAX. SIGN AREA																				
24x.375	2"	Y	8	Ø2"	24"Ø -0.375" WALL	19'- 6"	1/4"	35	14" - 0.5"	17'- 6"	FULL PEN.	1/4"	FULL PEN.		36	3,823	276.68	85.00	10.00	7.00
26x.375	2.25"	Y	8	Ø2.25"	24"Ø -0.375" WALL	22'- 0"	1/4"	35	16" - 0.625"	17'- 0"	FULL PEN.	1/16"	FULL PEN.	1/8"	36	4,970	301.22	98.33	12.00	8.00
24x.500	2.25"	Y	8	Ø2.25"	24"Ø -0.5" WALL	19'- 0"	3/8"	35	16" -0.625"	17'- 0"	FULL PEN.	3/8"	FULL PEN.	1/8"	36	5,182	355.32	94.16	14.00	9.00
24x.688	2.375"	Y	8	Ø2.25"	24"Ø -0.5" WALL	19'- 0"	3/8"	35	16" - 0.625"	14'- 0"	FULL PEN.	3/8"	FULL PEN.	1/8"	36	4,852	403.18	65.00	14.00	10.00
26x.500	2.5"	Y	8	Ø2"	24"Ø -0.5" WALL	23'- 0"	3/8"	35	22" - 0.75"	18'- 6"	FULL PEN.	5/16"	FULL PEN.	5/16"	36	7,582	377.83	166.66	15.00	10.00
26x.562	2.75"	Y	8	Ø2.25"	24"Ø -0.5" WALL	24'- 0"	3/8"	35	22" - 0.75"	18'- 0"	FULL PEN.	5/16"	FULL PEN.	5/16"	36	7,723	434.69	166.66	15.00	11.00
24x.938	2.5"	X	16	Ø2"	24"Ø -0.5" WALL	27'- 6"	3/8"	35	22" - 0.75"	22'- 6"	FULL PEN.	5/16"	FULL PEN.	5/16"	36	8,979	452.48	244.16	15.00	13.00
740 SF MAX. SIGN AREA																				
24x.375	2"	Y	8	Ø2"	24"Ø -0.375" WALL	20'- 0"	1/4"	35	14" - 0.625"	15'- 0"	FULL PEN.		FULL PEN.	1/8"	36	4,017	259.35	67.50	15.00	9.00
26x.375	2.25"	Y	8	Ø2.25"	24"Ø -0.5" WALL	22'- 0"	3/8"	35	20" -0.625"	15'- 0"	FULL PEN.	3/8"	FULL PEN.	1/8"	36	5,836	308.07	99.17	17.00	10.00
24x.500	2.25"	Y	8	Ø2.25"	24"Ø -0.5" WALL	21'- 0"	3/8"	35	20" - 0.75"	14'- 0"	FULL PEN.	5/16"	FULL PEN.	5/16"	36	5,857	357.56	92.50	20.00	11.00
24x.688	2.5"	Y	8	Ø2.25"	24"Ø -0.5" WALL	21'- 0"	3/8"	35	18" - 0.75"	15'- 6"	FULL PEN.	5/16"	FULL PEN.	5/16"	36	6,030	435.39	97.50	21.00	13.00
26x.500	2.5"	Y	8	Ø2"	24"Ø -0.5" WALL	26'- 0"	3/8"	35	24" - 0.75"	18'- 0"	FULL PEN.	5/16"	FULL PEN.	5/16"	36	8,175	350.97	175.00	20.00	11.00
26x.562	2.75"	Y	8	Ø2.25"	24"Ø -0.5" WALL	24'- 0"	3/8"	35	20" - 0.75"	18'- 0"	FULL PEN.	5/16"	FULL PEN.	5/16"	36	7,383	446.65	140.83	21.00	13.00
24x.938	3"	X	16	Ø2"	24"Ø -0.562" WALL	28'- 0"	7/16"	35	24" - 0.75"	21'- 6"	FULL PEN.	9/16"	FULL PEN.	5/16"	36	9,778	605.35	250.00	22.00	16.00
24x1.219	3"	X	16	Ø2.25"	24"Ø -0.562" WALL	27'- 0"	7/16"	35	23" - 0.75"	22'- 6"	FULL PEN.	5/8"	FULL PEN.	5/16"	36	9,680	651.48	250.00	22.00	18.00

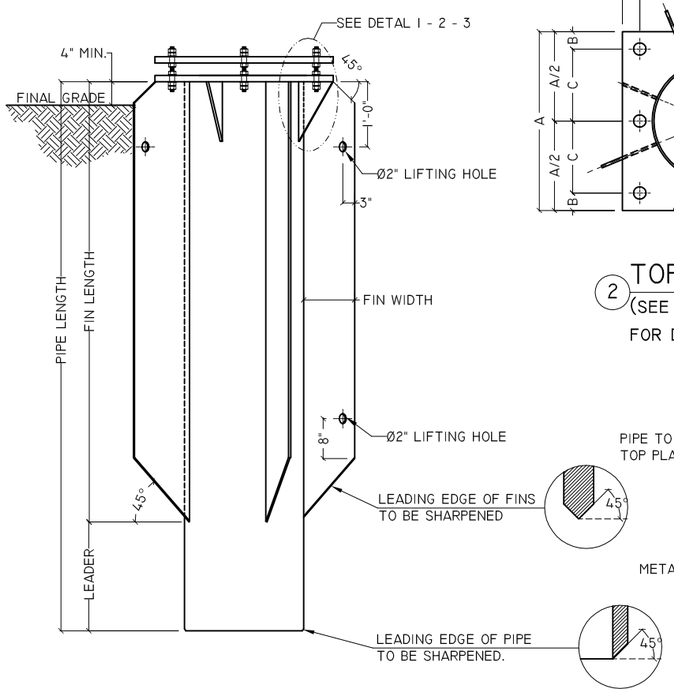

1 MF FRONT VIEW

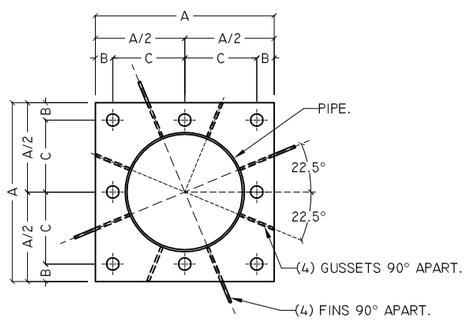

2 TOP PLATE TYPE 'Y'
(SEE BC-741M, SHEET 4 OF 6 FOR DIMENSIONS A,B & C)

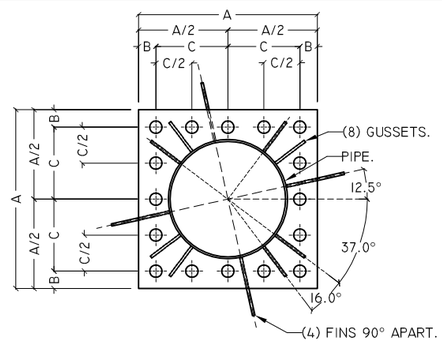

3 TOP PLATE TYPE 'X'
(SEE BC-741M, SHEET 4 OF 6 FOR DIMENSIONS A,B & C)

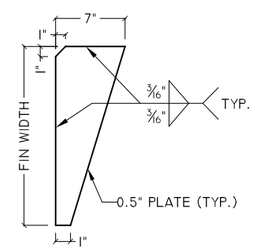

4 GUSSETS DETAIL

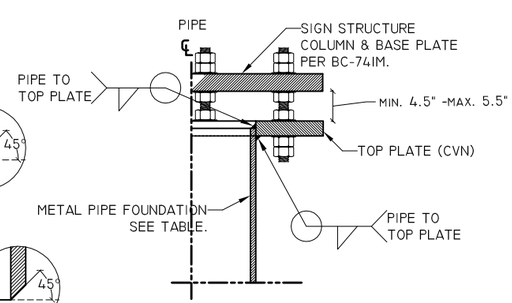

5 DETAIL 1
(TOP PLATE WELDS)

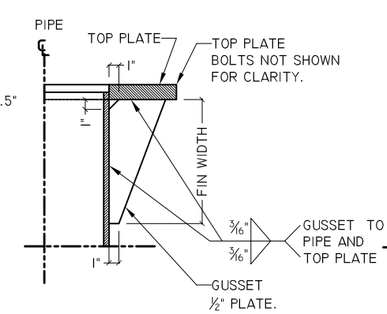

6 DETAIL 2
(GUSSET WELDS)

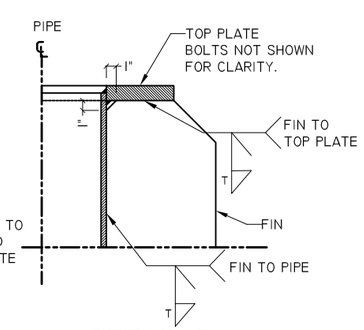

7 DETAIL 3
(FIN WELDS)

COMMONWEALTH OF PENNSYLVANIA
REGISTERED PROFESSIONAL
JASON R. TRUCKENBROD
ENGINEER
No. 51728-E
Oct. 28, 2013

NOTES:

GENERAL:

1. THIS STANDARD IS NOT APPLICABLE TO DMS STRUCTURES.

FABRICATION TOLERANCES:

1. UNLESS OTHERWISE SPECIFIED ALL FABRICATION TOLERANCES ARE:
   LINEAR TOLERANCES - 0"/±1/8"
   ANGULAR TOLERANCES - 0°/±1°.

INSTALLATION TOLERANCES & METHOD:

1. PLUMBNESS WITHIN 0.5" OVER FOUNDATION FULL LENGTH.
2. CENTER OF ANCHOR BOLT PATTERN WITHIN 0.25" OF FOUNDATIONS CENTER.
3. CENTER OF FOUNDATION WITHIN 0.5" OF PLANNED LOCATION IN ALL DIRECTIONS.
4. FIN ALIGNMENT WITHIN 2° OF DESIGN ORIENTATION UNLESS OTHERWISE PERMITTED BY ENGINEER.
5. FOUNDATION INSTALLED IN CONFORMITY WITH LINES, GRADES, FIN ORIENTATIONS AND LOCATION SHOWN ON CONTRACT DRAWINGS.
6. PRE-DRILLING MAY BE REQUIRED. SHANER INDUSTRIES RESERVE THE RIGHT TO SELECT THE PREFERRED METHOD OF INSTALLATION FOR EACH SITE AND FOUNDATION TYPE.

MATERIAL NOTES: (PROVIDE MILL CERTS ON ALL MATERIALS)

1. PIPE — ASTM A53 - GR B, 35 KSI.
2. FINS — ASTM A36 - GR 36.
3. PLATE — ASTM A36 - GR 36.
4. FABRICATION — FABRICATE IN ACCORDANCE WITH AASHTO AWS DI.IM/DI.I-2008 AND PUBLICATION 408, SECTION 1105. FABRICATE IN A BULLETIN 15 APPROVED SHOP HAVING SBR CERTIFICATION.
5. FINISH — H.D. GALVANIZED TO ASTM A123.

FOUNDATION HARDWARE:

1. STUDS — 18" L., ASTM A193 GR. B7 - 105 KSI MIN..
2. NUTS — ASTM A194 GR. 2H.
3. WASHERS — ASTM F436.
4. FINISH — H.D. GALVANIZED TO ASTM A153.

METAL FOUNDATIONS - ALL RIGHTS OF THIS TECHNOLOGY AND DESIGN ARE PROPERTY OF SHANER INDUSTRIES. UNAUTHORIZED USE OF THIS CONTENT WITHOUT EXPRESS WRITTEN PERMISSION IS SUBJECT TO LEGAL ACTION AND WILL BE PURSUED TO THE FULLEST EXTENT.

10/31/2013

THIS DRAWING IS THE PROPERTY OF "SHANER INDUSTRIES", IT IS MADE FOR EXCLUSIVE USE OF "SHANER INDUSTRIES". NEITHER THE DRAWING OR REPRODUCTION OF IT NOR INFORMATION DERIVED FROM IT IS TO BE GIVEN TO OTHERS WITHOUT THE EXPRESSED CONSENT OF "SHANER INDUSTRIES". NO USE IS TO BE MADE OF IT WHICH IS OR MAY BE IN ANY WAY INJURIOUS TO AND/OR CONTRARY TO THE INTERESTS OF "SHANER INDUSTRIES". "SHANER INDUSTRIES" MAKES NO REPRESENTATIONS OR WARRANTIES AS TO ANY USE OF THIS DRAWING OTHER THAN THAT OF WHICH "SHANER INDUSTRIES" ORIGINALLY INTENDED. THIS FOUNDATION TYPE IS COVERED UNDER U.S. PATENT No 5,570,975.

STATE: PA
JOB NUMBER:
PROJECT: COMMONWEALTH OF PENNSYLVANIA, DEPARTMENT OF TRANSPORTATION, BUREAU OF PROJECT DELIVERY.
DESCRIPTION: METAL FOUNDATIONS FOR OVERHEAD SIGN STRUCTURES, CANTILEVER AND CENTER-MOUNT STRUCTURES.

SHANER INDUSTRIES
930 GLENWOOD AVE.
AMBRIDGE, PA 15003
1-855-356-3825
T 724-266-1066
F 724-266-1006

CLIENT: PENNDOT	
DRAWN BY: DL	SCALE: N.T.S.
CHECKED BY: CH	
DATE: 10-18-2013	
DRAWING NUMBER: 13-602-BDTD	

Product:

Item 8622-7002 – MSE ARES Retaining Wall System
Tensar International Corporation
PADOT Drawing # 2011-273 PE

Approval Date:	**Initiated By SOL:**
January 17, 2014	483-14-01

Application/Use:

MSE ARES Retaining Wall System manufactured by Tensar International Corporation has been approved for use as an "As-designed" or "Alternate" retaining wall. The use as an "As-designed" or "Alternate" or retaining wall is at the discretion of the District Executive.

MSE ARES Retaining Wall System's usage has the following restrictions:

- Maximum Wall Height:

  35 feet for level backfill with traffic

This wall system meets both AASHTO and Design Manual, Part 4 design criteria.

Specifications:

Design/Material/Construction Specifications for this retaining wall system are specified on PADOT Drawing #2011-273 PE dated January 17, 2014 of MSE ARES Retaining Wall System details for your use.

Comments:

On those projects permitting the use of this system as an alternate, a special provision should be included in the proposal to indicate that the "MSE ARES Retaining Wall System" as an alternate is allowed.
The contractor will be required to revise the pertinent contract drawings as per DM-4, PP 1.10 to show the usage of "MSE ARES Retaining Wall System" and will also be required to reimburse the Department a fee of $1000 per design for the review and approval of the revision. This should be specified in the contract's Special Provisions.

DESIGN & CONSTRUCTION SPECIFICATIONS FOR TENSAR® ARES RETAINING WALL SYSTEM

1.0 GENERAL:

1.1 USE THIS STANDARD FOR THE PREPARATION OF CONSTRUCTION PLANS IN CONJUNCTION WITH THE DEPARTMENT'S DESIGN MANUAL, PART 4, SECTION 11.10, SPECIAL PROVISION AND PUB. 408 SPECIFICATIONS.

1.2 THIS STANDARD IS INTENDED TO BE USED AS A GUIDE FOR DETAILING THE PREFABRICATED WALLS. FOR UNUSUAL COMBINATIONS OF SHARP SKEW AND/OR VERTICAL AND HORIZONTAL CURVATURE, THIS STANDARD MUST BE USED WITH CAUTION SINCE THESE CONDITIONS MAY REQUIRE SPECIAL DESIGN CONSIDERATIONS.

1.3 DESIGN SPECIFICATION: AASHTO LRFD BRIDGE DESIGN SPECIFICATIONS (2010) 5TH EDITION AND COMMENTARY AS AMENDED BY PENNDOT DESIGN MANUAL PART 4, VOLUME 1, PUB. 15M.

1.4 PROVIDE AT NO EXPENSE TO THE DEPARTMENT FOUR (4) SETS (THREE (3) SETS TO THE DISTRICT AND ONE (1) SET TO THE CENTRAL OFFICE, BRIDGE DIVISION OF DESIGN DRAWINGS, CALCULATIONS, ERECTION METHOD AND DETAILED ERECTION PLANS FOR APPROVAL. PROVIDE SUFFICIENT DETAILS IN THE DESIGN DRAWINGS TO ELIMINATE THE NEED FOR SHOP DRAWINGS, USING DEPARTMENT DRAFTING STANDARDS, SHOW A PROFESSIONAL ENGINEERS SEAL, LICENSED IN PENNSYLVANIA, WITH A VALID SIGNATURE IN INK, THE DATE SIGNED, A BUSINESS NAME AND BUSINESS ADDRESS, ON THE SHEET OF THE DESIGN DRAWINGS AND ALSO INDICATE "I CERTIFY THAT ALL ASSUMPTIONS MADE IN DESIGNING THIS WALL HAVE BEEN VALIDATED EITHER THROUGH CONSTRUCTION DETAILS OR SPECIAL NOTES AND INSTRUCTIONS TO THE FABRICATOR, ERECTOR AND CONTRACTOR". PLACE A STATEMENT BELOW THE P.E. SEAL. THE DISTRICT BRIDGE ENGINEER WILL SIGN THE FINAL PLANS.

1.5 ON THE FIRST SHEET OF COMPUTATIONS, SHOW A PROFESSIONAL ENGINEERS SEAL, LICENSED IN PENNSYLVANIA, SIGNATURE, AND THE DATE SIGNED. IN THE EVENT THAT CERTAIN DESIGN PARAMETERS, STRESSES OR SPECIFICATIONS ARE IN CONFLICT, THE FOLLOWING ORDER OF PREDOMINANCE GOVERNS:

A. DESIGN REQUIREMENTS LISTED IN "SPECIAL DRAWINGS AND SPECIAL REQUIREMENTS" (PART B)
B. PDT – DESIGN STANDARDS
C. PDT – DESIGN MANUAL PART 4 (STRUCTURES)
D. AASHTO LRFD BRIDGE DESIGN SPECIFICATIONS, 5TH EDITION (2010)

1.6 IN THE EVENT THAT CLEAR ORDER OF PREDOMINANCE CANNOT BE ESTABLISHED OR A DIFFERENCE IN THE INTERPRETATION OF THE DESIGN CANNOT BE RESOLVED, THE CHIEF BRIDGE ENGINEER IS TO BE ARBITER AND HIS DECISION IS TO BE FINAL.

2.0 DESIGN RESPONSIBILITY

2.1 TIC RESPONSIBILITY
TIC TAKES FULL RESPONSIBILITY FOR ENGINEERING THEORY CALCULATIONS, CORRECTNESS AND ENSURING ALL DESIGN ASSUMPTIONS ARE VALIDATED IN THE CONTRACT DOCUMENTS; EITHER BY NEEDED DETAILS OR CONSTRUCTION SPECIFICATIONS. TIC HAS DESIGNED THE ARES RETAINING WALL SYSTEM TO MEET THE REQUIRED CDR VALUES LISTED BELOW.

2.1.1	INTERNAL STABILITY	STATIC
	GEOGRID TENSILE STRENGTH, MINIMUM	1.0
	GEOGRID PULLOUT CAPACITY, MINIMUM	1.0
	GEOGRID CONNECTION STRENGTH, MINIMUM	1.0
	SLIDING AT LOWEST GEOGRID, MINIMUM	1.0
2.1.2	EXTERNAL STABILITY	STATIC
	SLIDING AT MSE BASE, MINIMUM	1.0
	OVERTURNING, MINIMUM (e/L)	0.25 FOR SOIL & 0.375 FOR ROCK
	BEARING, MINIMUM	1.0

2.2 RESPONSIBILITY OF OTHERS
THE SITE CHARACTERISTICS LISTED BELOW AFFECTS THE PERFORMANCE OF THE ARES RETAINING WALL SYSTEM. TIC IS NOT RESPONSIBLE FOR EVALUATING OR VERIFYING SITE CHARACTERISTICS, THEREFORE TIC ASSUMES NO LIABILITY FOR THE POTENTIAL NEGATIVE EFFECTS OF THE SITE CHARACTERISTICS. THE OWNER OR OWNER'S REPRESENTATIVE IS RESPONSIBLE FOR ENSURING THAT THE FOLLOWING SITE CHARACTERISTICS ARE PROPERLY ADDRESSED BY A QUALIFIED ENGINEER.

2.2.1 TIC REPORTS PHYSICAL AND STRENGTH REQUIREMENTS OF THE BACKFILL. THE OWNER OR OWNER'S REPRESENTATIVE IS RESPONSIBLE FOR VERIFICATION OF BACKFILL SPECIFICATIONS AND APPROPRIATE BACKFILL TESTING METHODS AND FREQUENCY.

2.2.2 HYDROSTATIC CONDITIONS
TIC REPORTS MAXIMUM DESIGN WATER LEVELS (SURFACE AND SUBSURFACE) IN SECTION 3.4. TIC REQUIRES THAT THE REINFORCED ZONE OF THE MSE STRUCTURE REMAINS FREE OF WATER AND ALL UNBALANCED HYDROSTATIC FORCES. THE OWNER OR OWNER'S REPRESENTATIVE IS RESPONSIBLE FOR ENSURING THAT THE DESIGN, ANALYSIS, DETAILING, AND MITIGATION OF SURFACE WATER AND SUBSURFACE WATER, INCLUDING BUT NOT LIMITED TO COLLECTION, DIVERSION, AND EROSION/SCOUR PROTECTION ARE PROPERLY ADDRESSED BY THE OWNER OR OWNER'S REPRESENTATIVE.

2.2.3 SETTLEMENT
TOTAL SETTLEMENT AND DIFFERENTIAL SETTLEMENT OF THE MSE STRUCTURE EXCEEDING 1/200 SHALL BE THE RESPONSIBILITY OF THE OWNER. THE OWNER IS RESPONSIBLE TO NOTIFY TIC IF IT IS DETERMINED THAT THE POTENTIAL FOR DIFFERENTIAL SETTLEMENT EXCEEDS THIS VALUE. TIC ACCEPTS NO LIABILITY OR RESPONSIBILITY FOR THE EVALUATION OF SETTLEMENT.

2.2.4 GLOBAL STABILITY
GLOBAL STABILITY IS OUTSIDE THE SCOPE OF TIC'S RESPONSIBILITY FOR THE PROJECT. THE OWNER OR OWNER'S REPRESENTATIVE IS RESPONSIBLE FOR ENSURING THAT THE SOILS BEHIND AND BELOW THE MSE STRUCTURES ARE CAPABLE OF RESISTING ROTATIONAL FAILURE.

3.0 DESIGN PARAMETERS

3.1 DESIGN OF THE ARES RETAINING WALL SYSTEM IS BASED ON THE AASHTO LRFD BRIDGE DESIGN SPECIFICATIONS (2010), 5th EDITION AND THE PROJECT SPECIFICATIONS. THE FOLLOWING PARAMETERS CONTROL THE DESIGN:

3.2 BACKFILL SOIL (MINIMUM)

SOIL ZONE	MOIST UNIT WEIGHT (PCF)	EFFECTIVE FRICTION (DEGREES)	EFFECTIVE COHESION (PSF)
REINFORCED ZONE	90-120	34	0
RETAINED ZONE	120	30	0
FOUNDATION ZONE	120	30	0

3.3 DESIGN LIFE = 100 YEARS

3.4 HYDROSTATIC PARAMETERS
PHREATIC SURFACES ARE CONSIDERED IN DESIGN ONLY WHEN SPECIFIED IN THE CONTRACT DOCUMENTS. TIC IS ONLY RESPONSIBLE FOR EVALUATING HYDROSTATIC CONDITIONS AND THEIR EFFECTS ON INTERNAL AND EXTERNAL STABILITY AS STATED IN SECTION 2.0.

4.0 MATERIALS

4.1 GRANULAR BACKFILL

4.1.1 PROVIDE CRUSHED OR NATURAL SAND, CRUSHED OR UNCRUSHED GRAVEL, BLASTED LIMESTONE, BLASTED SANDSTONE OR ANY STANDARD SIZE COARSE AGGREGATE MEETING THE FOLLOWING GRADATION AS DETERMINED IN ACCORDANCE WITH PTM 616

SIEVE SIZE	PERCENT PASSING
3"	100
3/4"	20 – 100
NO. 40	0 – 60
NO. 200	0 – 10*

*DETERMINATION OF THE FINES CONTENT (MINUS NO. 200 SIEVE MATERIAL) FOR MSE WALL REINFORCED BACKFILL MUST BE DETERMINED BY WASH TEST ACCORDING TO PTM NO. 100. AMOUNT OF MATERIAL FINER THAN NO. 200 SIEVE IN AGGREGATE. THIS IS IN ADDITION TO PTM NO. 616 SIEVE ANALYSIS OF COURSE AND FINE AGGREGATE. HAVE THE BACKFILL CONFORM TO ALL OF THE FOLLOWING ADDITIONAL REQUIREMENTS:

4.1.1.1 FURNISH MATERIALS MEETING THE QUALITY REQUIREMENTS OF TYPE C COARSE AGGREGATE OR BETTER AS SPECIFIED IN SECTION 703.2(a) TABLE B EXCEPT FURNISH MATERIALS FREE OF CLAY LUMPS, FRIABLE PARTICLE, COAL AND COKE. DO NOT USE METALLURGICAL SLAG OR CINDERS.

4.1.1.2 FURNISH MATERIALS WITH A MAXIMUM PLASTICITY INDEX OF 3 AS DETERMINED IN ACCORDANCE WITH AASHTO T89 AND T90.

4.1.1.3 FURNISH MATERIAL EXHIBITING AN ANGLE OF INTERNAL FRICTION OF NOT LESS THAN 34 DEGREES AS DETERMINED IN ACCORDANCE WITH AASHTO T236 ON THE PORTION FINER THAN NO. 10 SIEVE COMPACTED TO 95% OF PTM NO. 106, METHOD 8 AT OPTIMUM MOISTURE CONTENT EXCEPT FOR COARSE AGGREGATE AS SPECIFIED IN SECTION 703.2.

4.1.2 DIRECT SHEAR TESTING MAY BE PERFORMED ON SAMPLES CONTAINING MATERIAL LARGER THAN NO. 10 SIEVE IF THE SHEAR DEVICE CONFORMS TO AASHTO T236 SECTIONS 5.4 AND 5.5.

4.1.3 PROVIDE MATERIALS MEETING THE FOLLOWING ELECTROCHEMICAL CRITERIA.

TEST	CRITERIA
pH, AASHTO T288	3 – 10

PROVIDE RANDOMLY SELECTED BACKFILL SAMPLES FOR TESTING 30 CALENDAR DAYS BEFORE USE, AS DIRECTED BY THE REPRESENTATIVE. OBTAIN APPROVAL FOR BACKFILL MATERIAL BEFORE USE. EACH SAMPLE SUBMITTED IS TO CONSIST OF THE FOLLOWING:

- THREE BAGS OF APPROXIMATELY 40 LBS CONTAINING A NORMAL SPECIMEN REPRESENTING THE COMPLETE GRADATION.
- ONE BAG CONTAINING APPROXIMATELY 10 LBS OF MATERIAL PASSING NO. 8 SIEVE.

4.2 SOIL REINFORCEMENT
GEOGRID REINFORCEMENT SHALL BE TENSAR UNIAXIAL GEOGRID MANUFACTURED BY THE TENSAR INTERNATIONAL CORPORATION, MORROW, GEORGIA, USA.

4.2.1 BODKIN BARS SHALL BE HDPE BARS MANUFACTURED BY THE TENSAR INTERNATIONAL CORPORATION, MORROW, GEORGIA, USA, FROM THE SAME RESIN AS GEOGRIDS AND MEET SPECS FOR SECTION 738-GEOGRIDS.

4.3 BEARING PADS SHALL BE 3/4" X 2" X 4" 80 DUROMETER EPDM PER ASTM D2240 SUPPLIED BY TENSAR INTERNATIONAL CORPORATION, MORROW, GEORGIA, USA.

4.4 FACING MATERIAL

4.4.1 ARES PRECAST CONCRETE PANELS SHALL BE HAVE A 28-DAY MINIMUM COMPRESSIVE STRENGTH OF 4000PSI AND MANUFACTURED BY AN AUTHORIZED MANUFACTURER.

4.4.2 THE CONCRETE LEVELING PAD SHALL BE CLASS A CEMENT CONCRETE

4.5 DRAINAGE MATERIAL

4.5.1 GEOTEXTILE SHALL MEET THE REQUIREMENT OF BC-799M AND AS NOTED IN THE TENSAR DETAILS.

5.0 CONSTRUCTION

5.1 A COMPLETE SET OF APPROVED MSE STRUCTURE SHOP DRAWINGS AND CONTRACT SPECIFICATIONS SHALL BE ON SITE AT ALL TIMES DURING CONSTRUCTION OF THE ARES RETAINING WALL SYSTEM. THE CONTRACTOR IS RESPONSIBLE TO FOLLOW THE DRAWINGS AND THE INSTRUCTIONS PROVIDED IN THE CONSTRUCTION AND QUALITY CONTROL MANUAL PROVIDED BY TIC.

5.2 FOUNDATION PREPARATION

5.2.1 PRIOR TO CONSTRUCTION OF THE ARES RETAINING WALL SYSTEM, THE CONTRACTOR SHALL CLEAR AND GRUB THE REINFORCED BACKFILL FOOTPRINT, REMOVING TOP SOIL, BRUSH, SOD OR OTHER ORGANIC OR DELETERIOUS MATERIAL. ANY UNSUITABLE SOILS SHALL BE OVER-EXCAVATED, REPLACED WITH COMPACTED BACKFILL MATERIAL TO PROJECT SPECIFICATIONS OR AS OTHERWISE DIRECTED BY OWNER'S ENGINEER.

5.2.2 FOUNDATION AREA OF THE ARES RETAINING WALL SYSTEM SHALL BE PROOF ROLLED IN ACCORDANCE TO PUB. 408 SECTION 206.

5.3 MSE FACING

5.3.1 THE CONTRACTOR IS RESPONSIBLE TO SURVEY AND LAYOUT THE LEVELING PAD AND ARES RETAINING WALL FACING AS SHOWN ON THE OWNER'S CONTRACT DRAWINGS. CONSTRUCT THE LEVELING PAD IN ACCORDANCE WITH THE GRADES, ELEVATIONS, AND DETAILS SHOWN HEREIN.

5.3.2 PLACE AND BRACE THE ARES PANELS IN ACCORDANCE WITH THE 'ARES CONSTRUCTION AND QUALITY CONTROL MANUAL'.

5.3.3 PLACE JOINT MATERIAL TO THE LIMITS SHOWN HEREIN. USE CONSTRUCTION ADHESIVE TO HOLD JOINT MATERIAL IN PLACE PRIOR TO PLACING BACKFILL AGAINST THE PANEL.

5.4 GEOGRID PLACEMENT

5.4.1 GEOGRIDS SHALL BE INSTALLED AT THE LENGTHS, ELEVATIONS, AND LOCATIONS SHOWN ON THE DRAWINGS HEREIN. CHANGES TO GEOGRID LAYOUT ARE NOT PERMISSIBLE WITHOUT THE EXPRESS WRITTEN CONSENT OF THE OWNER AND TIC.

5.4.2 PRIOR TO PLACING BACKFILL, THE GEOGRID REINFORCEMENT SHALL BE ATTACHED TO THE ARES PANEL WITH A BODKIN BAR, AS SHOWN HEREIN. THE GEOGRID SHALL BE TENSIONED IN ACCORDANCE WITH THE 'ARES CONSTRUCTION AND QUALITY CONTROL MANUAL' AND ANCHORED BY PINNING OR PLACING SOIL ON THE GEOGRID AT THE BACK OF THE REINFORCED ZONE.

5.4.3 A MINIMUM OF 3 INCHES OF REINFORCED BACKFILL SHALL BE PLACED BETWEEN OVERLAPPING LAYERS OF GEOGRID REINFORCEMENT.

5.5 BACKFILL PLACEMENT

5.6 GRANULAR FILL MATERIAL

5.6.1 BACKFILL SHALL BE PLACED IN HORIZONTAL LAYERS AND COMPACTED IN ACCORDANCE TO THE PROJECT SPECIAL PROVISIONS. ONLY LIGHTWEIGHT EQUIPMENT SHALL BE ALLOWED WITHIN THREE FEET OF THE BACK FACE OF WALL.

5.6.2 BACKFILL SHALL BE PLACED FROM THE BACK OF THE MSE STRUCTURE FACING TOWARDS THE ENDS OF THE GEOGRID TO PROMOTE PROPER TENSIONING.

5.6.3 BACKFILL SHALL BE PLACED AND COMPACTED AS SPECIFIED IN PROJECT SPECIAL PROVISIONS AND/OR STANDARD SPECIFICATIONS.

5.6.4 AT THE END OF EACH WORKDAY, BACKFILL SURFACE SHALL BE GRADED AWAY FROM THE WALL FACE A MINIMUM OF TWO PERCENT SLOPE. THE BACKFILL SURFACE SHALL BE COMPACTED WITH A SMOOTH DRUM ROLLER TO MINIMIZE PONDING OF WATER AND SATURATION OF THE BACKFILL. A TEMPORARY SOIL BERM SHALL BE CONSTRUCTED NEAR THE CREST OF THE MSE STRUCTURE TO PREVENT SURFACE WATER RUNOFF FROM OVERTOPPING THE MSE STRUCTURE.

6.0 SPECIAL PROVISIONS

6.1 THE DESIGN IS BASED ON SOIL PARAMETERS, FOUNDATION CONDITIONS, GROUNDWATER CONDITIONS, AND LOADINGS STATED IN SECTION 3.0. TIC ASSUMES NO LIABILITY FOR INTERPRETATION OR VERIFICATION OF SUBSURFACE CONDITIONS, FOR SUITABILITY OF SOIL DESIGN PARAMETERS OR FOR INTERPRETATION OF SUBSURFACE GROUNDWATER CONDITIONS. THE CLIENT IS RESPONSIBLE TO VERIFY THAT ACTUAL SITE CONDITIONS, PARAMETERS, AND STRUCTURE GEOMETRIES ARE AS DESCRIBED HEREIN PRIOR TO AND DURING CONSTRUCTION. PROCEEDING WITH CONSTRUCTION WITHOUT FIRST VERIFYING CONDITIONS AND PARAMETERS DISCUSSED ABOVE SHALL ABSOLVE TIC FROM ALL LIABILITY FOR THE DESIGN AND CONSTRUCTION OF THIS STRUCTURE AND THE CONTRACTOR SHALL INDEMNIFY AND HOLD HARMLESS TIC FROM ALL RESULTING CLAIMS, DAMAGES, LOSSES AND EXPENSES.

6.2 THE OWNER OR OWNER'S REPRESENTATIVE IS RESPONSIBLE FOR PROVIDING QUALITY ASSURANCE AND QUALITY CONTROL PROGRAMS THAT ENSURE CONSTRUCTION OF THE MSE STRUCTURE IS PERFORMED IN ACCORDANCE WITH THE TIC NOTES AND DRAWINGS, AND THE OWNER'S CONTRACT PLANS AND SPECIFICATIONS.

6.3 THE CONTRACTOR SHALL IMMEDIATELY REPORT ANY CHANGES TO TIC (770-344-2090) PRIOR TO PROCEEDING WITH CONSTRUCTION. THE CONTRACTOR SHALL IMMEDIATELY REPORT TO THE OWNER AND TIC THE DISCOVERY OF ANY ROCK FORMATIONS AND/OR GROUNDWATER DURING CONSTRUCTION.

6.4 TIC WILL SUPPLY A QUALIFIED REPRESENTATIVE TO AT THE START OF WALL CONSTRUCTION TO PROVIDE SITE ASSISTANCE AND PROPER INSTALLATION GUIDANCE TO THE CONTRACTOR. TIC REPRESENTATIVE WILL BE AVAILABLE FOR CONSULTATION DURING ALL PHASES OF WALL CONSTRUCTION ANY TIC REPRESENTATIVE ON SITE DOES NOT HAVE THE AUTHORITY TO STOP OR START CONSTRUCTION OF THE MSE STRUCTURE OR ANY OTHER WORK.

1/17/14

PENNSYLVANIA
DEPARTMENT OF TRANSPORTATION
RECOMMENDED
Thomas P Macioce
CHIEF BRIDGE ENGINEER

COMMONWEALTH OF PENNSYLVANIA
REGISTERED PROFESSIONAL
STEPHEN ANDREW LUPTAK
ENGINEER
PE073219

PREPARED BY:
TENSAR INTERNATIONAL CORPORATION
2500 NORTHWINDS PARKWAY | SUITE 500
ALPHARETTA, GEORGIA 30009 |
770–344–2090

ENGINEER

Dec 26 2013
DATE

"I HEREBY CERTIFY THAT ALL DESIGN ASSUMPTIONS HAVE BEEN VALIDATED EITHER THROUGH CONSTRUCTION DETAILS, SPECIAL NOTES, AND THROUGH THE CONTRACT PLANS PROVISIONS"

COMMONWEALTH OF PENNSYLVANIA
DEPARTMENT OF TRANSPORTATION
BUREAU OF PROJECT DELIVERY

STANDARD
MECHANICALLY STABILIZED EARTH
RETAINING WALLS
ARES RETAINING WALL SYSTEM

PENNDOT DRAWING # 2011–273PE

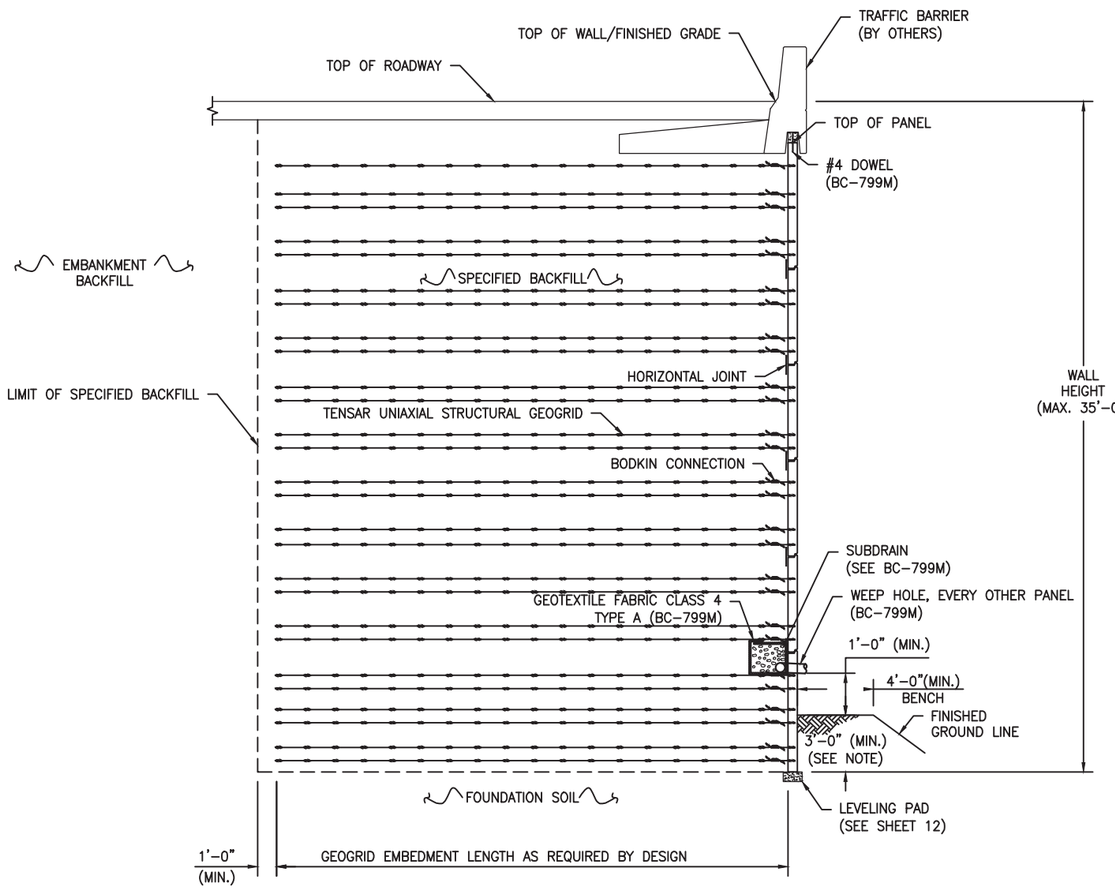

TYPICAL CROSS-SECTION - FILL SECTION

Scale: N.T.S.

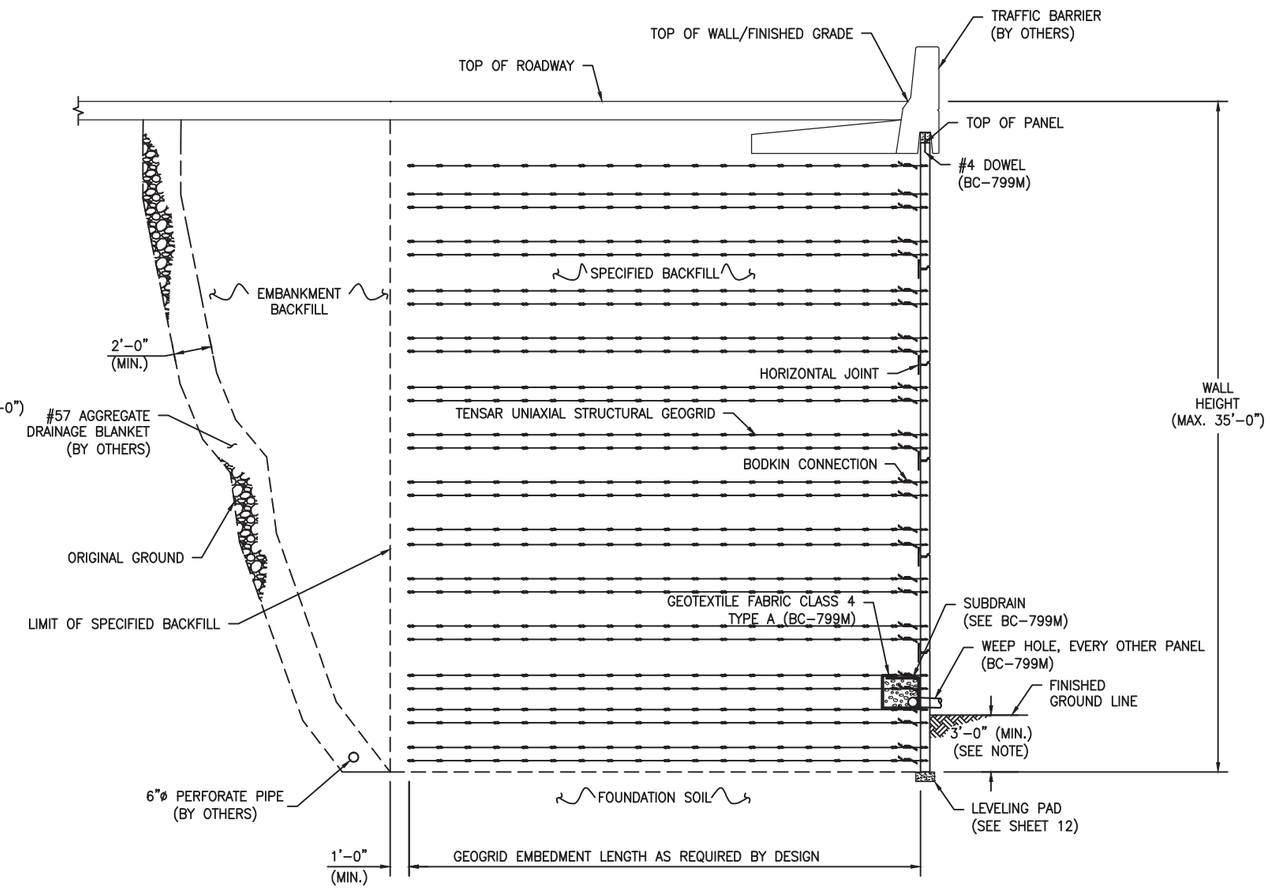

TYPICAL CROSS-SECTION - CUT SECTION

Scale: N.T.S.

NOTE:

WALL EMBEDMENT SHALL BE PROVIDED IN THE CONTRACT DOCUMENTS AND ACCOUNT FOR PREVAILING FROST DEPTH AND FOR SLOPE STABILITY ANALYSIS.

1/17/14

COMMONWEALTH OF PENNSYLVANIA
REGISTERED PROFESSIONAL
STEPHEN ANDREW LUPTAK
ENGINEER
PE073219

COMMONWEALTH OF PENNSYLVANIA
DEPARTMENT OF TRANSPORTATION
BUREAU OF PROJECT DELIVERY

STANDARD
MECHANICALLY STABILIZED EARTH
RETAINING WALLS
ARES RETAINING WALL SYSTEM

PENNDOT DRAWING # 2011-273PE

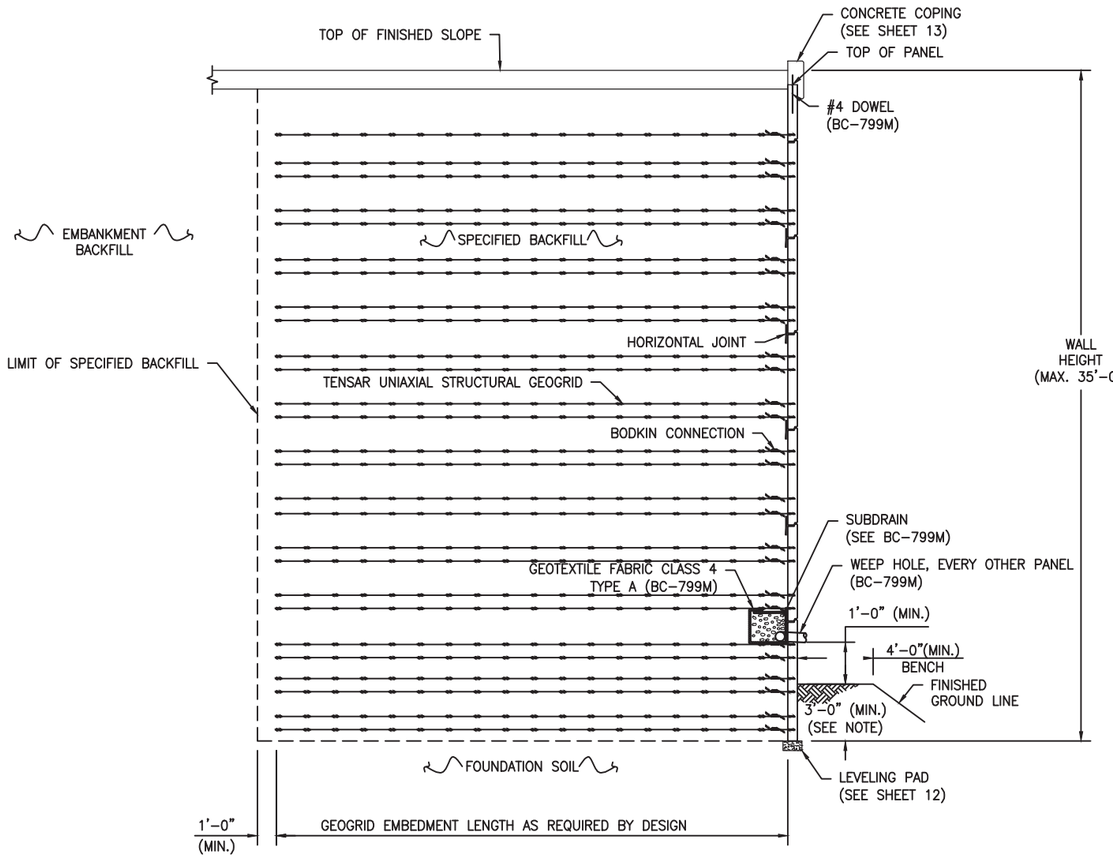

TYPICAL CROSS-SECTION - FILL SECTION

Scale: N.T.S.

NOTE:

WALL EMBEDMENT SHALL BE PROVIDED IN THE CONTRACT DOCUMENTS AND ACCOUNT FOR PREVAILING FROST DEPTH AND FOR SLOPE STABILITY ANALYSIS.

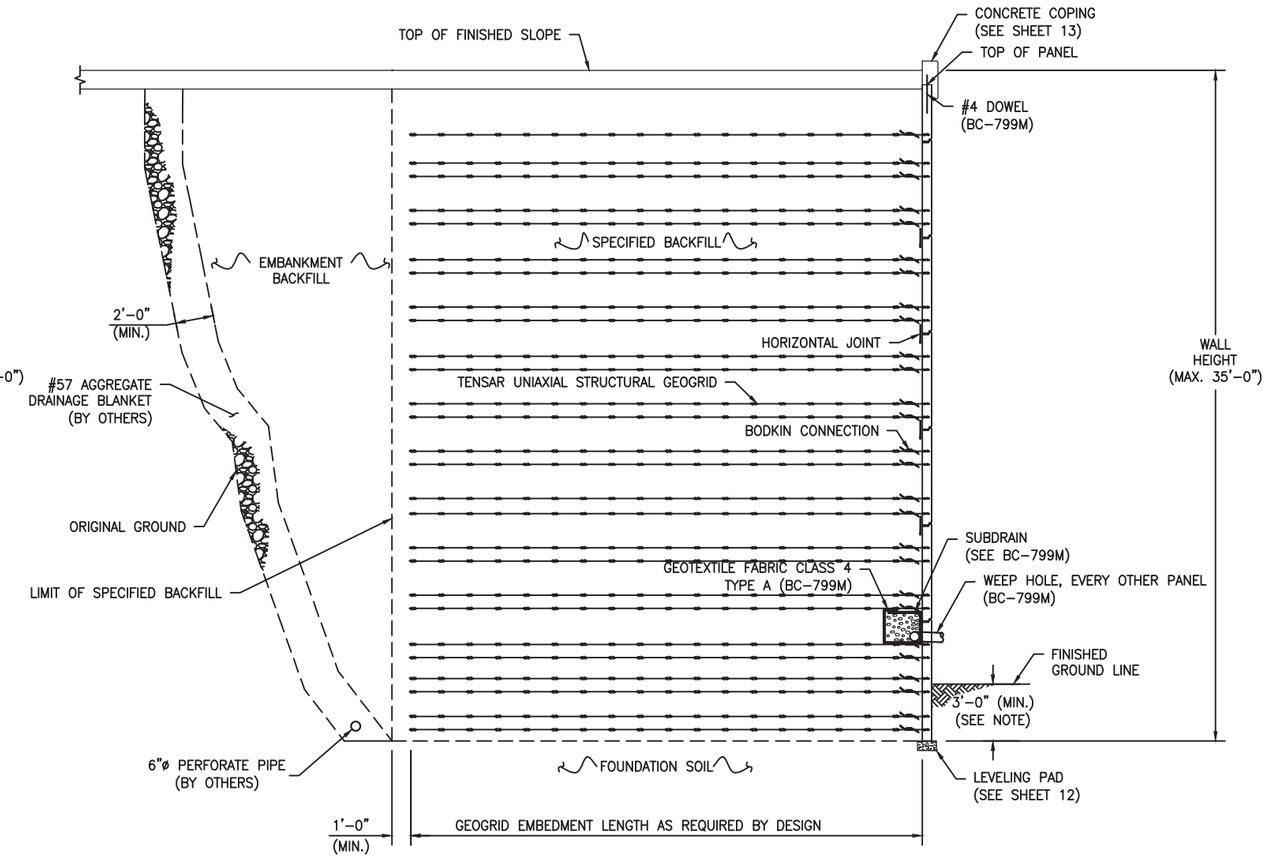

TYPICAL CROSS-SECTION - CUT SECTION

Scale: N.T.S.

1/17/14

COMMONWEALTH OF PENNSYLVANIA
DEPARTMENT OF TRANSPORTATION
BUREAU OF PROJECT DELIVERY

STANDARD
MECHANICALLY STABILIZED EARTH
RETAINING WALLS
ARES RETAINING WALL SYSTEM

PENNDOT DRAWING # 2011-273PE

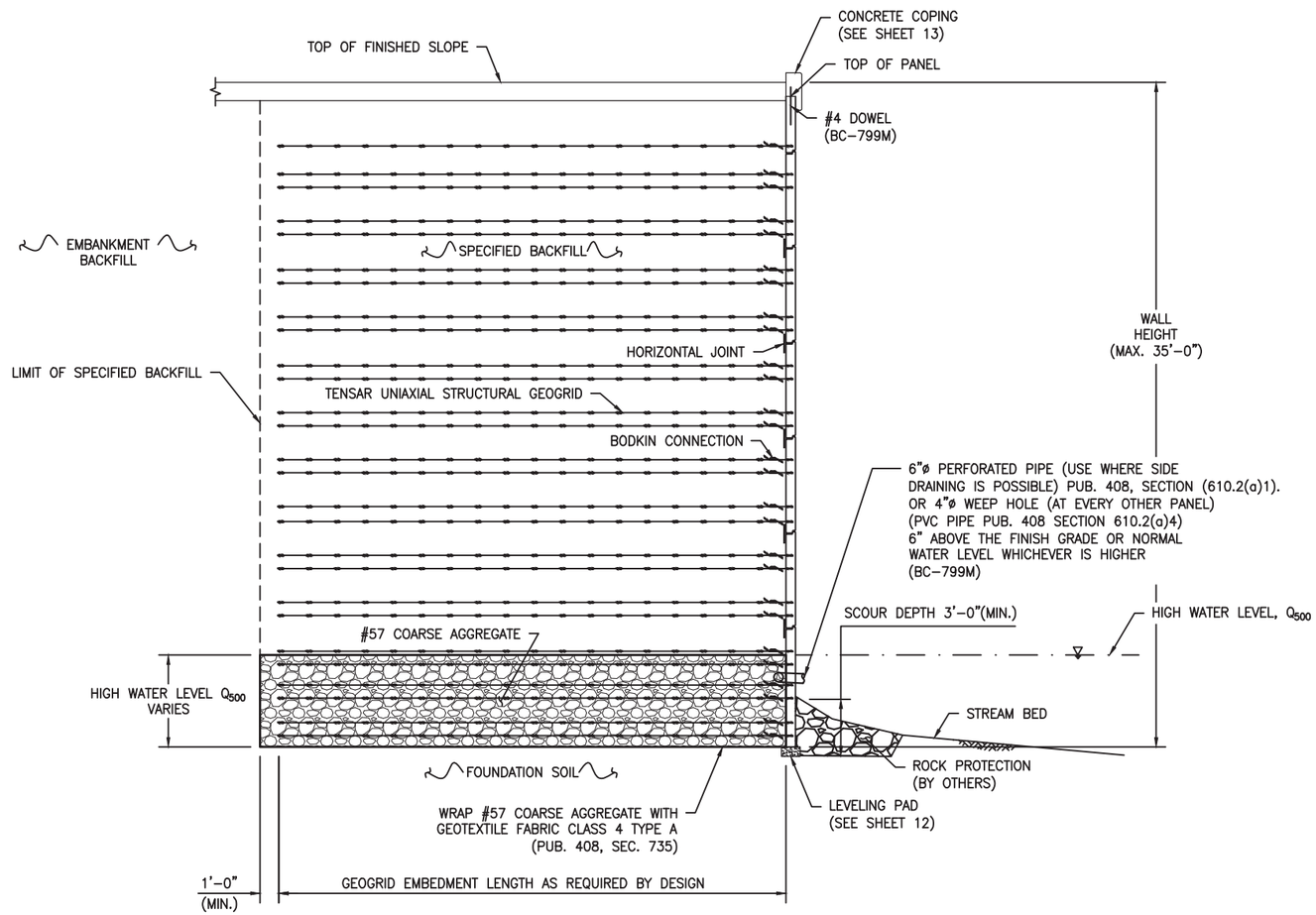

TYPICAL CROSS-SECTION AT STREAM

(STREAM VELOCITY, V, IS LESS THAN 2.0 FPS)

Scale: N.T.S.

1/17/14

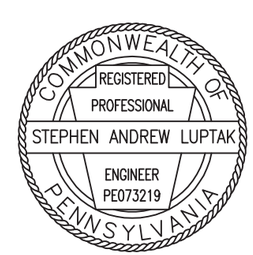

COMMONWEALTH OF PENNSYLVANIA
DEPARTMENT OF TRANSPORTATION
BUREAU OF PROJECT DELIVERY

STANDARD
MECHANICALLY STABILIZED EARTH
RETAINING WALLS
ARES RETAINING WALL SYSTEM

PENNDOT DRAWING # 2011-273PE

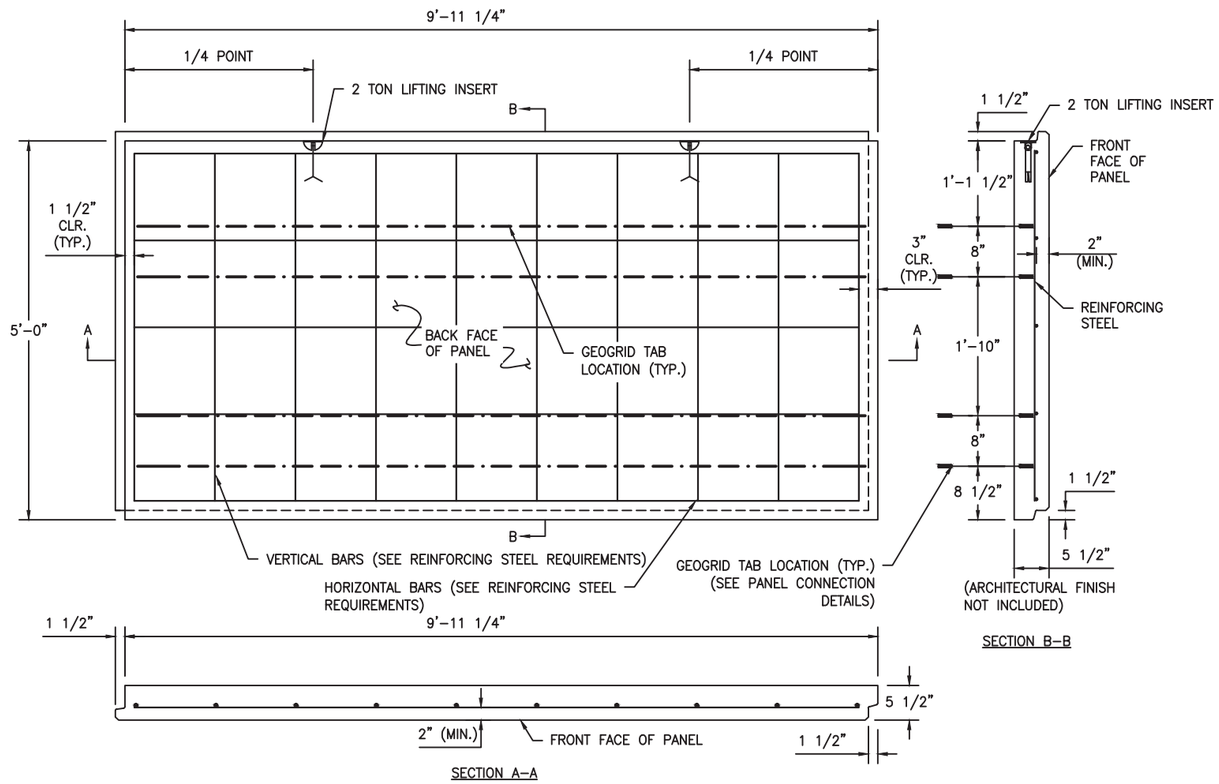

TYPICAL PANEL DETAILS - STANDARD 5' X 10' AG2 PANEL SHOWING REBAR REINFORCING

Scale: N.T.S.

NOTES:

1. ALL PANELS ARE SHOWN BACK FACE VIEW.
2. CONCRETE SHALL HAVE A MINIMUM 28-DAY COMPRESSIVE STRENGTH OF 4000 PSI.
3. REINFORCING STEEL REQUIREMENTS:
   ALL BARS MUST BE PER ASTM A-615 GRADE 60

   FOR 5 1/2" PANEL:
   HORIZONTAL: #4 BARS @ 1'-4" O.C. (MAX.)
   VERTICAL: #4 BARS @ 1'-2" O.C. (MAX.)
4. REINFORCING STEEL SHALL BE EPOXY COATED IN ACCORDANCE WITH PENNDOT STANDARD DRAWING BC-799M.
5. ALL TOP PANELS SHALL BE CAST WITH FLAT TOP SURFACE AND #4 DOWELS SPACED AT 1'-0" IN ACCORDANCE WITH PENNDOT STANDARD DRAWING BC-799M.
6. ALL BOTTOM B'S PANELS SHALL BE CAST WITH FLAT BOTTOM SURFACE.

1/17/14

COMMONWEALTH OF PENNSYLVANIA
REGISTERED PROFESSIONAL
STEPHEN ANDREW LUPTAK
ENGINEER
PE073219

COMMONWEALTH OF PENNSYLVANIA
DEPARTMENT OF TRANSPORTATION
BUREAU OF PROJECT DELIVERY

STANDARD
MECHANICALLY STABILIZED EARTH
RETAINING WALLS
ARES RETAINING WALL SYSTEM

PENNDOT DRAWING # 2011-273PE

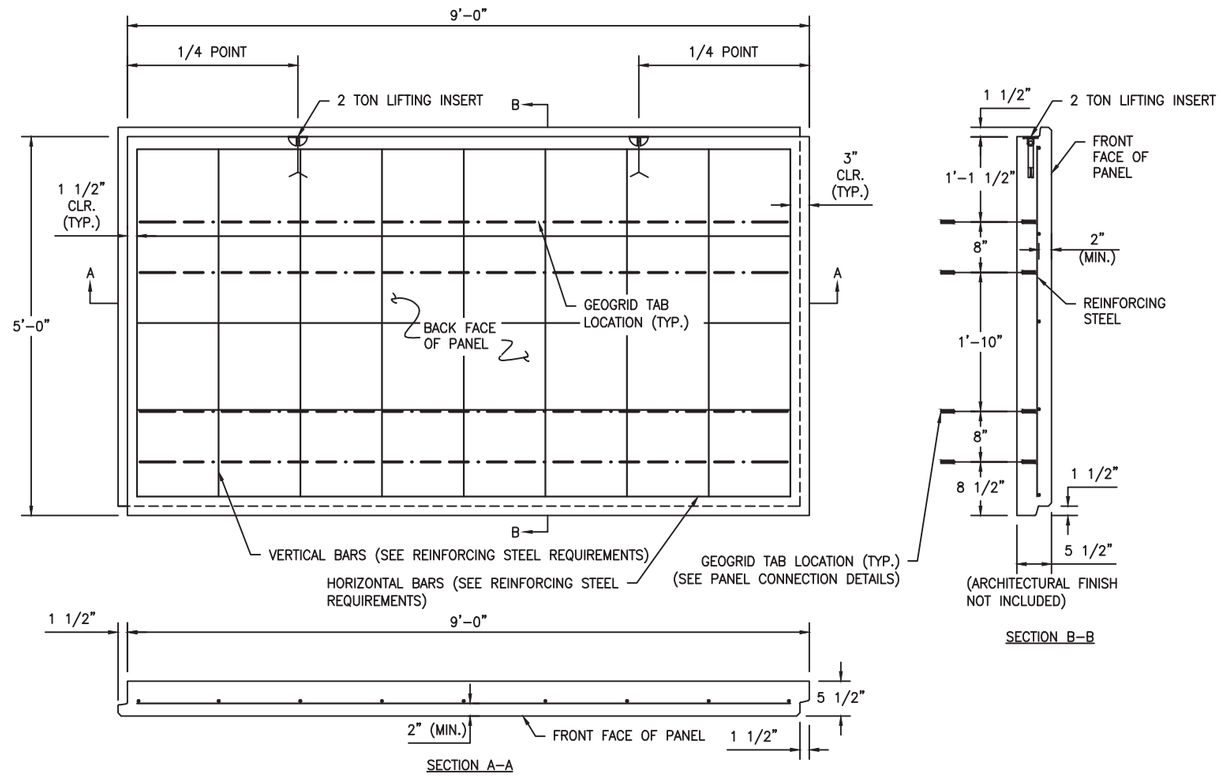

TYPICAL PANEL DETAILS - STANDARD 5' X 9' AG2 PANEL SHOWING REBAR REINFORCING

Scale: N.T.S.

NOTES:

1. ALL PANELS ARE SHOWN BACK FACE VIEW.
2. CONCRETE SHALL HAVE A MINIMUM 28-DAY COMPRESSIVE STRENGTH OF 4000 PSI.
3. REINFORCING STEEL REQUIREMENTS:
   ALL BARS MUST BE PER ASTM A-615 GRADE 60

   FOR 5 1/2" PANEL:
   HORIZONTAL: #4 BARS @ 1'-4" O.C. (MAX.)
   VERTICAL: #4 BARS @ 1'-2" O.C. (MAX.)
4. REINFORCING STEEL SHALL BE EPOXY COATED IN ACCORDANCE WITH PENNDOT STANDARD DRAWING BC-799M.
5. ALL TOP PANELS SHALL BE CAST WITH FLAT TOP SURFACE AND #4 DOWELS SPACED AT 1'-0" IN ACCORDANCE WITH PENNDOT STANDARD DRAWING BC-799M.
6. ALL BOTTOM B'S PANELS SHALL BE CAST WITH FLAT BOTTOM SURFACE.

1/17/14

COMMONWEALTH OF PENNSYLVANIA
REGISTERED PROFESSIONAL
STEPHEN ANDREW LUPTAK
ENGINEER
PE073219

COMMONWEALTH OF PENNSYLVANIA
DEPARTMENT OF TRANSPORTATION
BUREAU OF PROJECT DELIVERY

STANDARD
MECHANICALLY STABILIZED EARTH
RETAINING WALLS
ARES RETAINING WALL SYSTEM

PENNDOT DRAWING # 2011-273PE

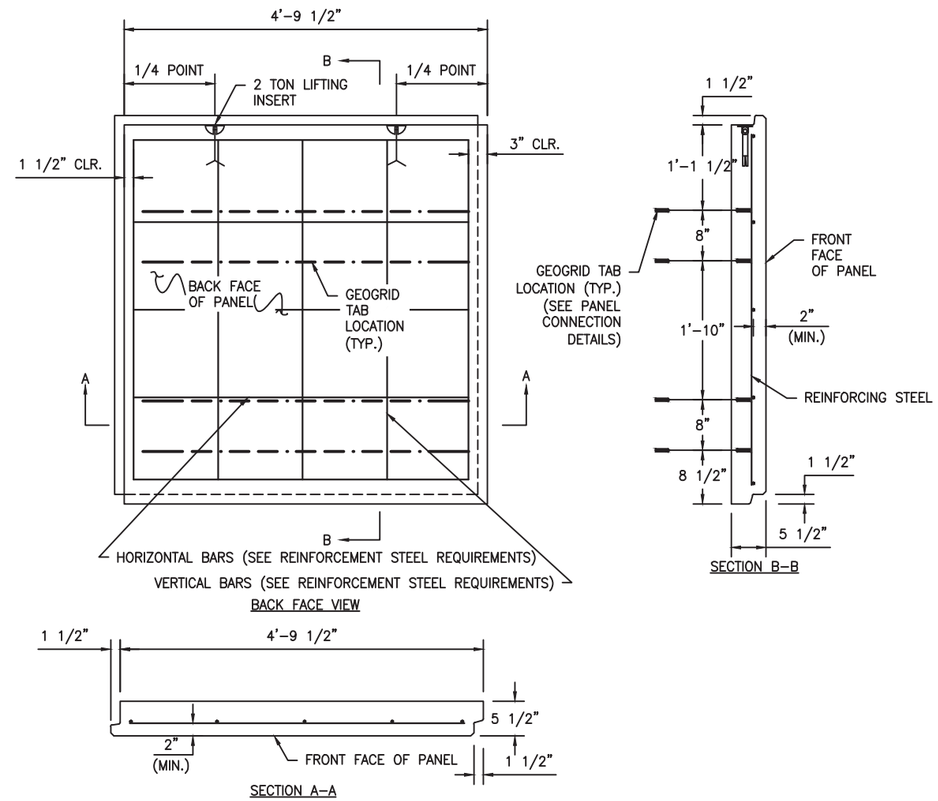

STANDARD PANEL DETAILS - STANDARD 5' X 5' AG2 PANEL SHOWING REBAR REINFORCING

Scale: N.T.S.

NOTES:

1. ALL PANELS ARE SHOWN BACK FACE VIEW.
2. CONCRETE SHALL HAVE A MINIMUM 28-DAY COMPRESSIVE STRENGTH OF 4000 PSI.
3. REINFORCING STEEL REQUIREMENTS:
   ALL BARS MUST BE PER ASTM A-615 GRADE 60

   FOR 5 1/2" PANEL:
   HORIZONTAL: #4 BARS @ 1'-4" O.C. (MAX.)
   VERTICAL: #4 BARS @ 1'-2" O.C. (MAX.)
4. REINFORCING STEEL SHALL BE EPOXY COATED IN ACCORDANCE PENNDOT STANDARD DRAWING BC-799M.
5. ALL TOP PANELS SHALL BE CAST WITH FLAT TOP SURFACE AND #4 DOWELS SPACED AT 1'-0" IN ACCORDANCE WITH PENNDOT STANDARD DRAWING BC-799M.
6. ALL BOTTOM B'S PANELS SHALL BE CAST WITH FLAT BOTTOM SURFACE.

1/17/14

COMMONWEALTH OF PENNSYLVANIA
REGISTERED PROFESSIONAL
STEPHEN ANDREW LUPTAK
ENGINEER
PE073219

COMMONWEALTH OF PENNSYLVANIA
DEPARTMENT OF TRANSPORTATION
BUREAU OF PROJECT DELIVERY

STANDARD
MECHANICALLY STABILIZED EARTH
RETAINING WALLS
ARES RETAINING WALL SYSTEM

PENNDOT DRAWING # 2011-273PE

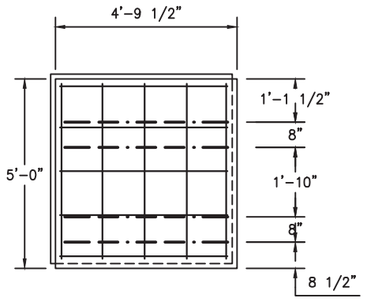

STANDARD AG2 PANEL

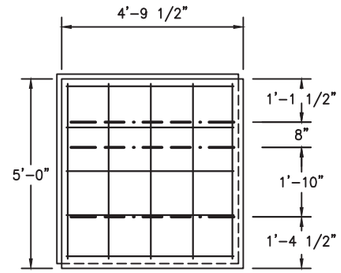

STANDARD AG3 PANEL

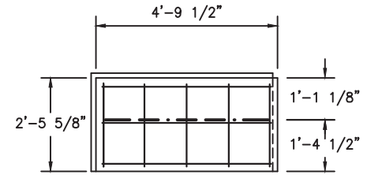

STANDARD B1 PANEL

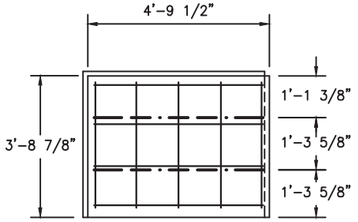

STANDARD B2 PANEL

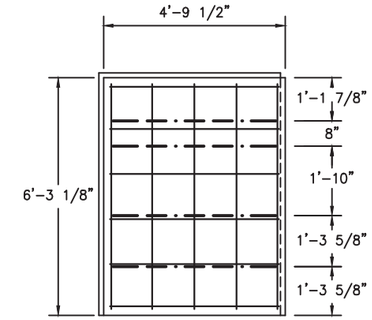

STANDARD B3G9 PANEL

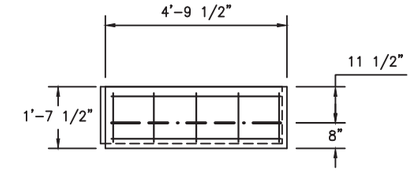

STANDARD T18 PANEL

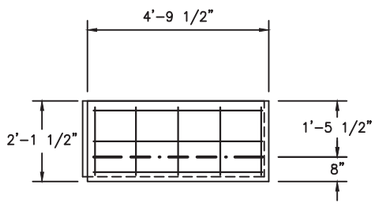

STANDARD T24 PANEL

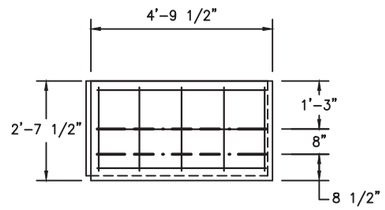

STANDARD T30G PANEL

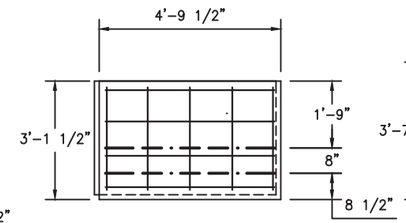

STANDARD T36G PANEL

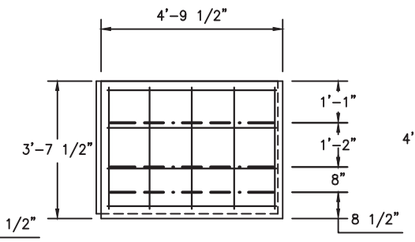

STANDARD T42G PANEL

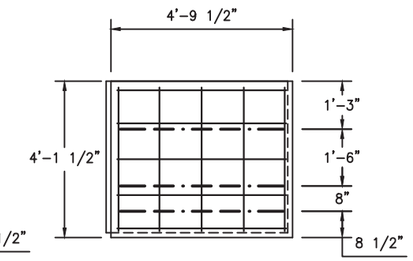

STANDARD T48G PANEL

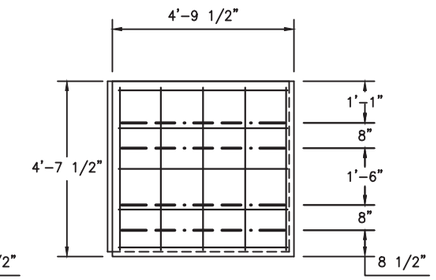

STANDARD T54G PANEL

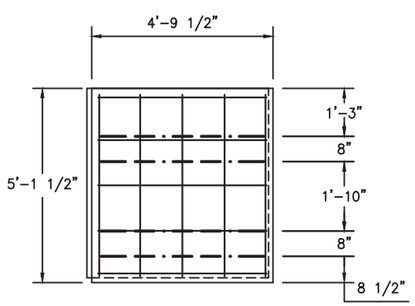

STANDARD T60G PANEL

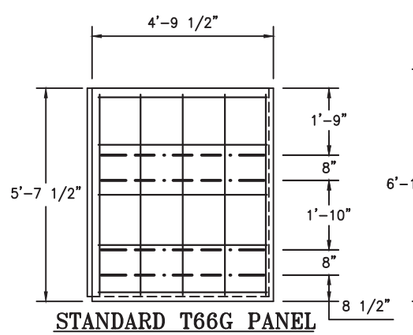

STANDARD T66G PANEL

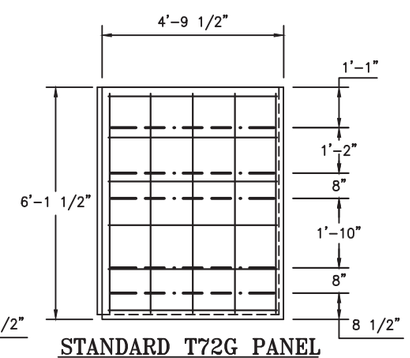

STANDARD T72G PANEL

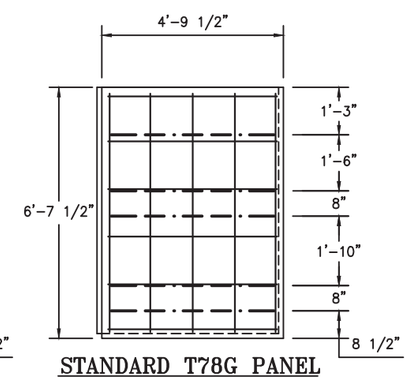

STANDARD T78G PANEL

LEGEND

GEOGRID TAB

NOTES:

1. ALL PANELS ARE SHOWN BACK FACE VIEW.
2. CONCRETE SHALL HAVE A MINIMUM 28-DAY COMPRESSIVE STRNGTH OF 4000 PSI.
3. REINFORCING STEEL REQUIREMENTS:
   ALL BARS MUST BE PER ASTM A-615 GRADE 60

   FOR 5 1/2" PANEL:
   HORIZONTAL: #4 BARS @ 1'-4" O.C. (MAX.)
   VERTICAL: #4 BARS @ 1'-2" O.C. (MAX.)
4. REINFORCING STEEL SHALL BE EPOXY COATED IN ACCORDANCE WITH FLAT TOP SURFACE AND PENNDOT STANDARD DRAWING BC-799M.
5. ALL TOP PANELS SHALL BE CAST WITH FLAT TOP SURFACE AND #4 DOWELS SPACED AT 1'-0" IN ACCORDANCE WITH PENNDOT STANDARD DRAWING BC-799M.
6. ADDITIONAL GEOGRID LAYERS ARE ADDED 8" ABOVE OR BELOW THE STANDARD GEOGRID TAB LOCATIONS AS REQUIRED BY DESIGN.

STANDARD PANELS
Scale: N.T.S.

1/17/14

COMMONWEALTH OF PENNSYLVANIA
DEPARTMENT OF TRANSPORTATION
BUREAU OF PROJECT DELIVERY

STANDARD
MECHANICALLY STABILIZED EARTH
RETAINING WALLS
ARES RETAINING WALL SYSTEM

PENNDOT DRAWING # 2011-273PE

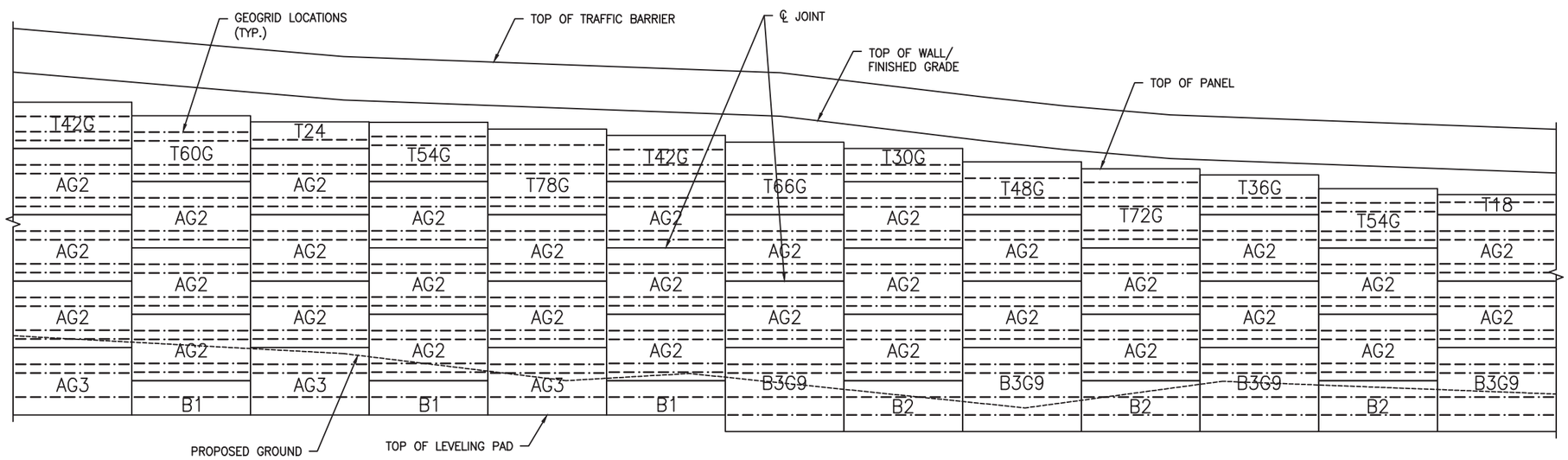

TYPICAL PARTIAL ELEVATION VIEW
Scale: N.T.S.

1/17/14

COMMONWEALTH OF PENNSYLVANIA
REGISTERED PROFESSIONAL
STEPHEN ANDREW LUPTAK
ENGINEER
PE073219

COMMONWEALTH OF PENNSYLVANIA
DEPARTMENT OF TRANSPORTATION
BUREAU OF PROJECT DELIVERY

STANDARD
MECHANICALLY STABILIZED EARTH
RETAINING WALLS
ARES RETAINING WALL SYSTEM

PENNDOT DRAWING # 2011-273PE

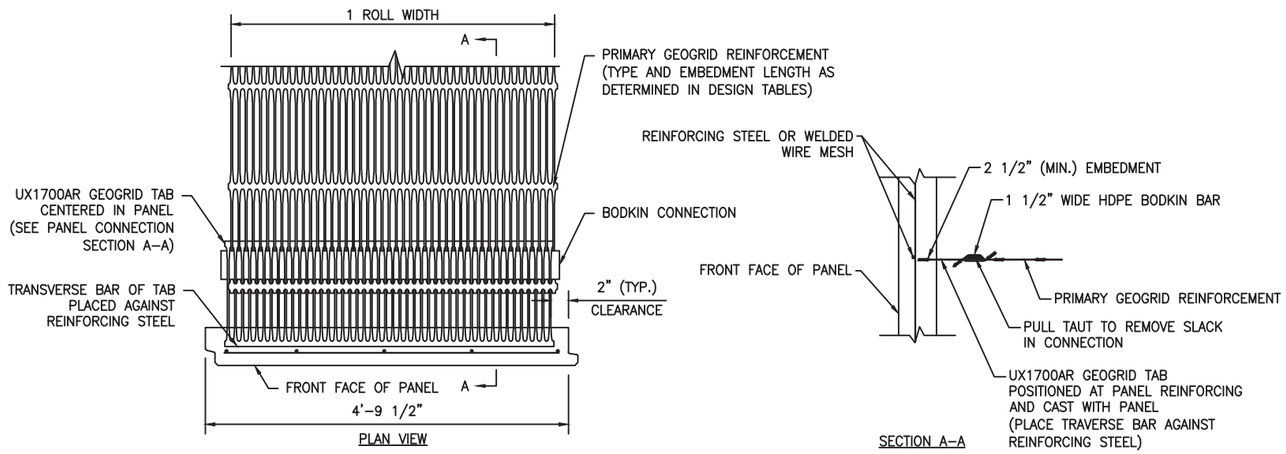

CONNECTION DETAIL PLAN VIEW (89% COVERAGE)

Scale: N.T.S.

TO FORM A PANEL BODKIN CONNECTION FOR CONNECTING TO FACING PANEL:

1. BEND THE LAST APERTURE OF REINFORCING GEOGRID AS SHOWN.

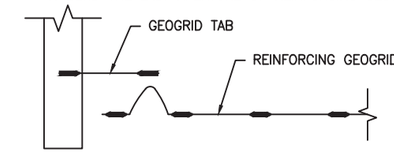

2. PASS THE RIBS OF THE BENT APERTURES THROUGH THE RIBS OF THE GEOGRID TAB AND INSERT THE BODKIN BAR INTO THE SPACE BETWEEN THE TWO GEOGRID LAYERS.

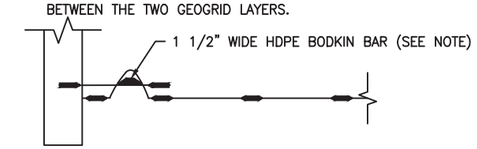

3. PULL REINFORCING GEOGRID TAUT TO TENSION CONNECTION.

PANEL BODKIN CONNECTION

Scale: N.T.S.

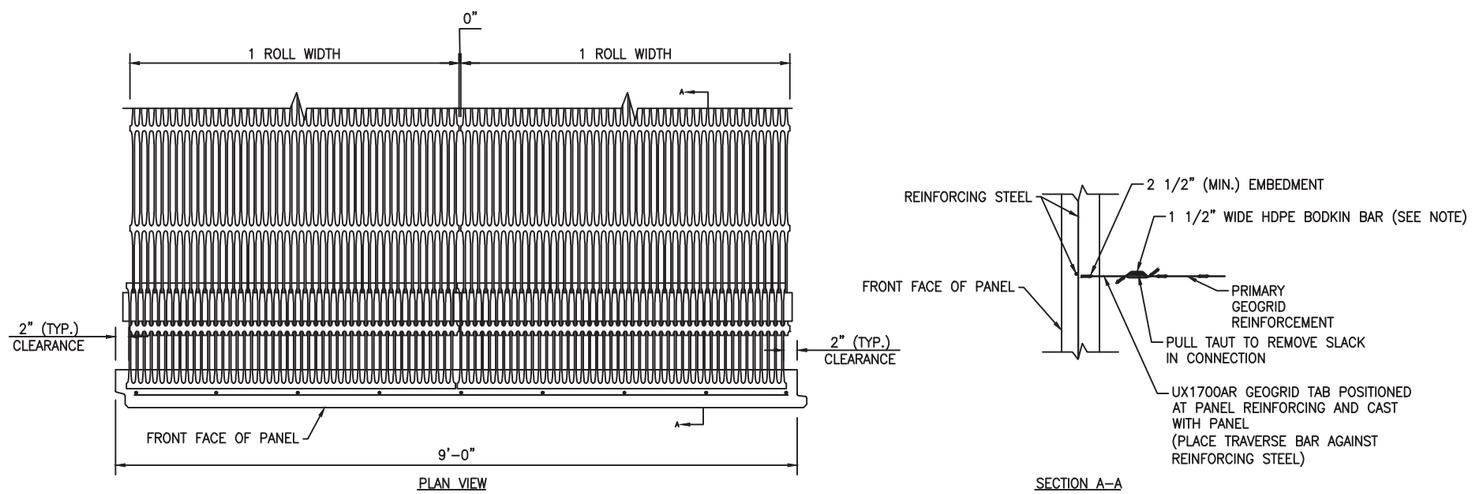

CONNECTION DETAIL PLAN VIEW (96% COVERAGE)

Scale: N.T.S.

NOTE:

BODKIN BAR MADE FROM THE SAME RESIN AS THE GEOGRIDS AND MEET THE SPECIFICATIONS PER SECTION 738–GEOGRIDS.

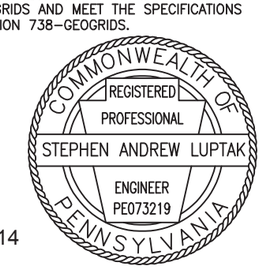

1/17/14

COMMONWEALTH OF PENNSYLVANIA
DEPARTMENT OF TRANSPORTATION
BUREAU OF PROJECT DELIVERY

STANDARD
MECHANICALLY STABILIZED EARTH
RETAINING WALLS
ARES RETAINING WALL SYSTEM

PENNDOT DRAWING # 2011–273PE

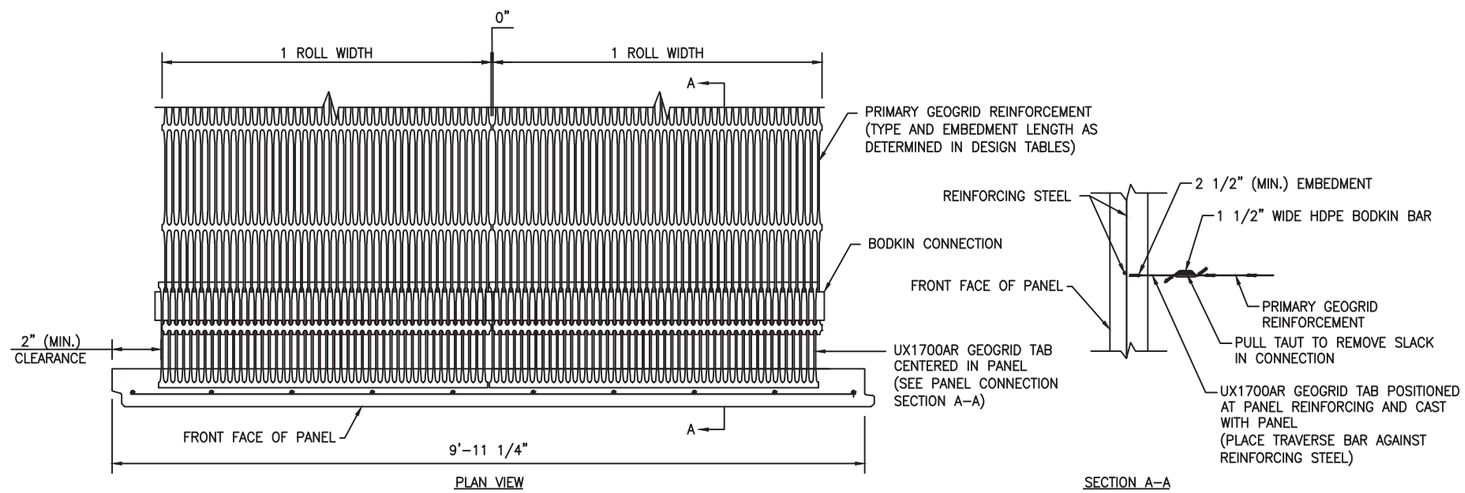

CONNECTION DETAIL PLAN VIEW (87% COVERAGE)

Scale: N.T.S.

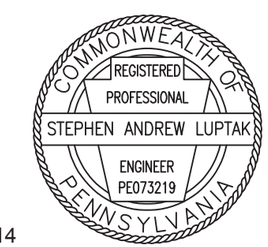

1/17/14

COMMONWEALTH OF PENNSYLVANIA
DEPARTMENT OF TRANSPORTATION
BUREAU OF PROJECT DELIVERY

STANDARD
MECHANICALLY STABILIZED EARTH
RETAINING WALLS
ARES RETAINING WALL SYSTEM

PENNDOT DRAWING # 2011–273PE

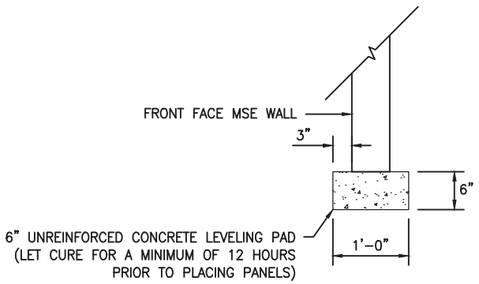

LEVELING PAD DETAIL

Scale: N.T.S.

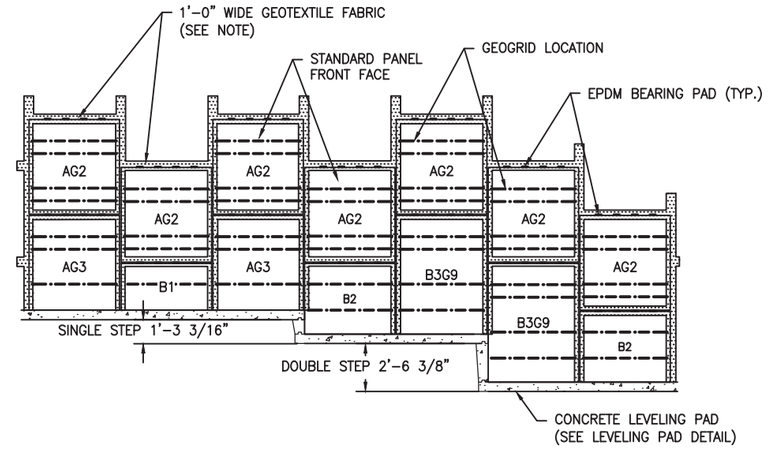

NOTE:

COVER ALL JOINTS BETWEEN PANELS ON BACK SIDE OF THE WALL WITH GEOTEXTILE FABRIC CLASS 4, TYPE A. APPLY ADHESIVE COATING ON PANELS ONLY AND NOT ON GEOTEXTILE FABRIC. DO NOT APPLY ADHESIVE WITHIN 2" OF THE JOINT.

TYPICAL LEVELING PAD STEP AND GEOTEXTILE COVERAGE DETAIL (5' X 5' SHOWN, 5' X 9' AND 5' X 10' SIMILAR)

Scale: N.T.S.

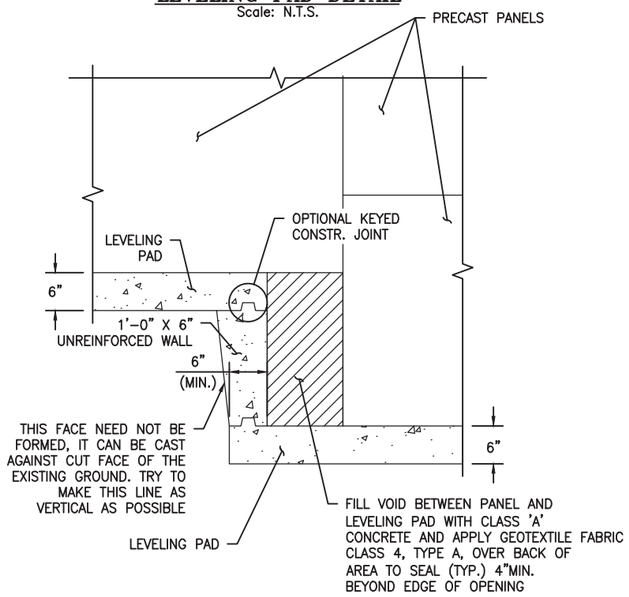

LEVELING PAD STEP DETAIL

Scale: N.T.S.

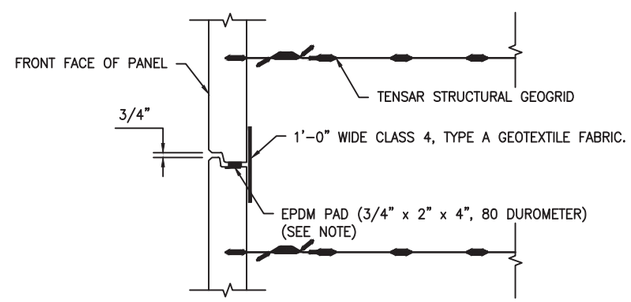

NOTE:
4 PADS PER HORIZONTAL JOINT FOR 5' X 5' PANELS.
8 PADS PER HORIZONTAL JOINT FOR 5' X 9' AND 5' X 10' PANELS.

HORIZONTAL JOINT DETAIL

Scale: N.T.S.

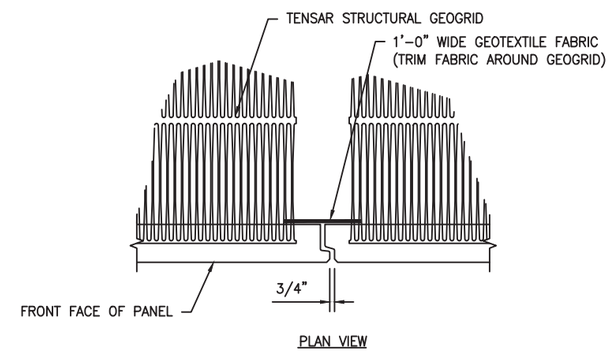

VERTICAL JOINT DETAIL

Scale: N.T.S.

1/17/14

COMMONWEALTH OF PENNSYLVANIA
REGISTERED PROFESSIONAL
STEPHEN ANDREW LUPTAK
ENGINEER
PE073219

COMMONWEALTH OF PENNSYLVANIA
DEPARTMENT OF TRANSPORTATION
BUREAU OF PROJECT DELIVERY

STANDARD
MECHANICALLY STABILIZED EARTH
RETAINING WALLS
ARES RETAINING WALL SYSTEM

PENNDOT DRAWING # 2011-273PE

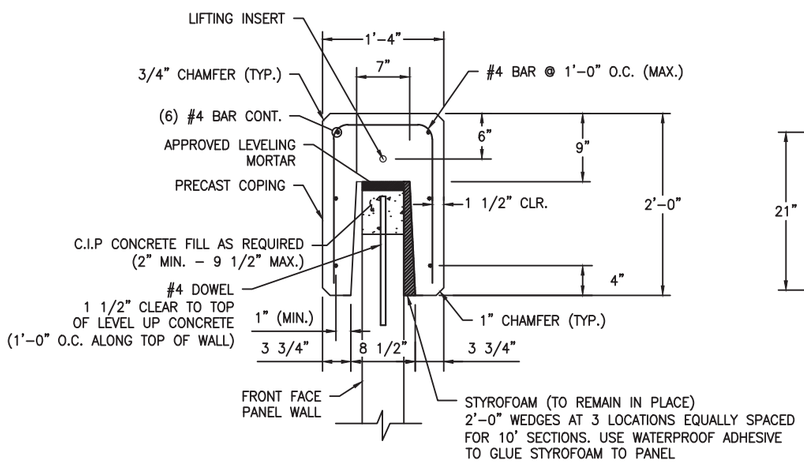

PRECAST COPING SECTION

Scale: N.T.S.

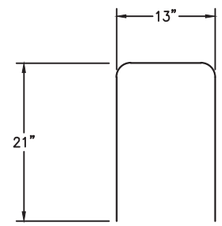

BAR BENDING DETAIL

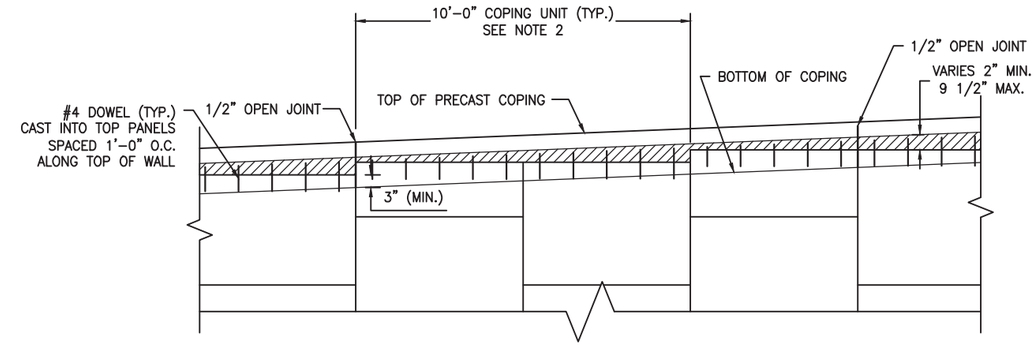

NOTES:
1. PRECAST COPING SHOWN. REFER TO PENNDOT STANDARD DRAWING BC-799M FOR C.I.P. COPING DETAIL
2. ALL OPEN JOINTS IN THE PRECAST COPING SHALL BE FILLED WITH 1/2" EXPANSION JOINT MATERIAL AND CAULKED WITH SILICONE SEALANT. MATERIALS BY CONTRACTOR

PARTIAL ELEVATION VIEW - PRECAST COPING

Scale: N.T.S.

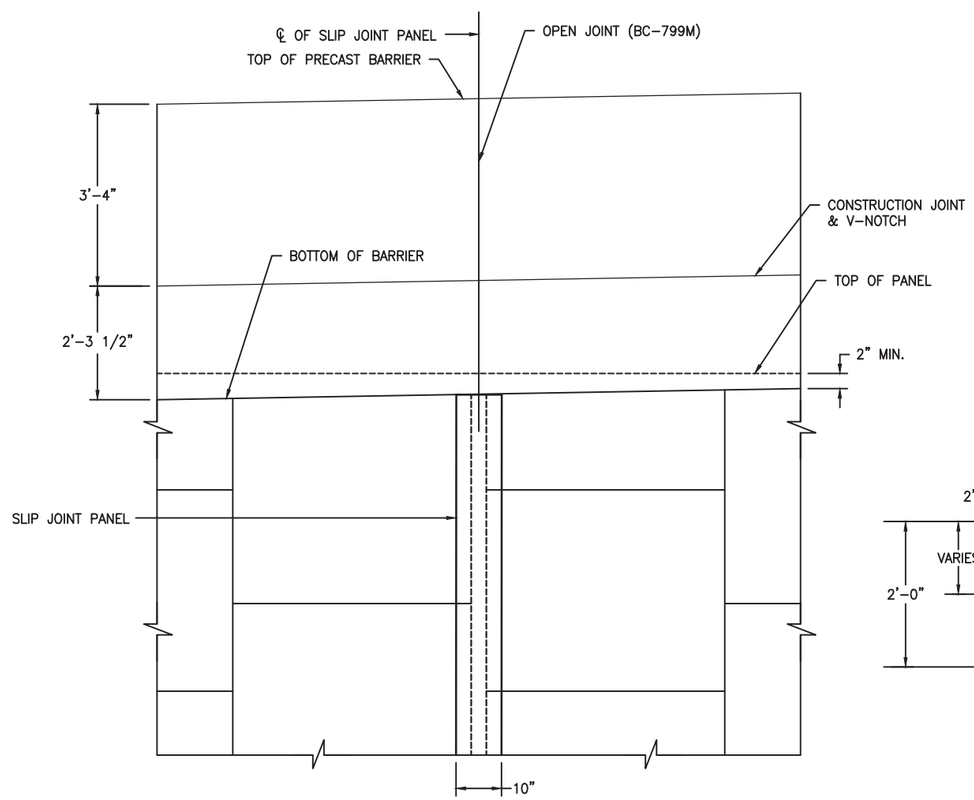

TRAFFIC BARRIER OVER SLIP JOINT PANEL

Scale: N.T.S.

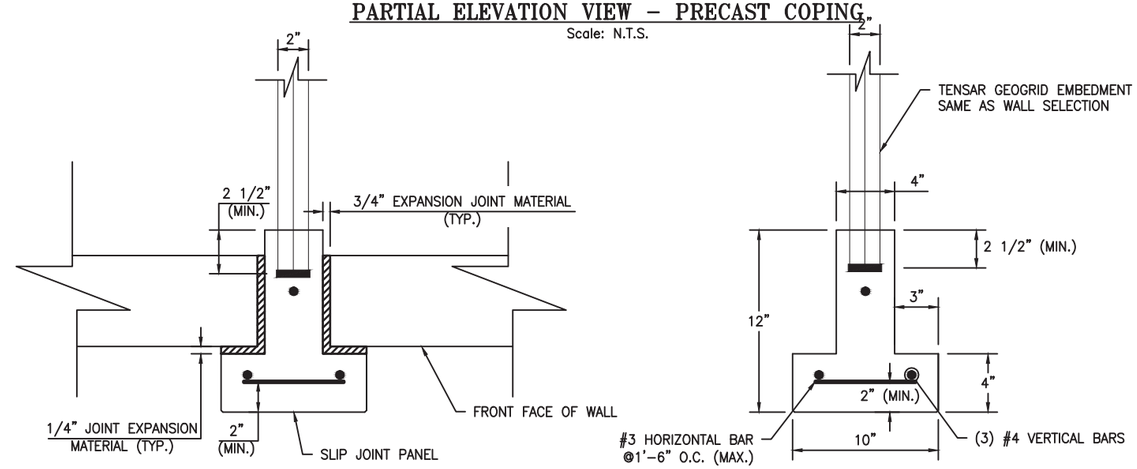

SLIP JOINT DETAIL

Scale: N.T.S.

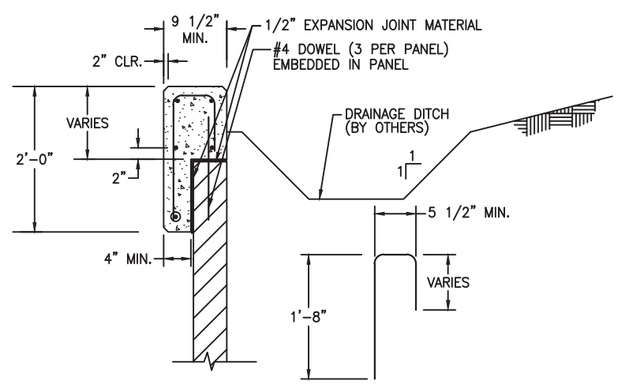

BAR BENDING DETAIL

C.I.P COPING

SCALE: N.T.S.

1/17/14

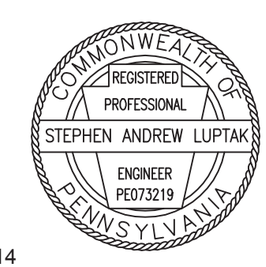

COMMONWEALTH OF PENNSYLVANIA
DEPARTMENT OF TRANSPORTATION
BUREAU OF PROJECT DELIVERY

STANDARD
MECHANICALLY STABILIZED EARTH
RETAINING WALLS
ARES RETAINING WALL SYSTEM

PENNDOT DRAWING # 2011-273PE

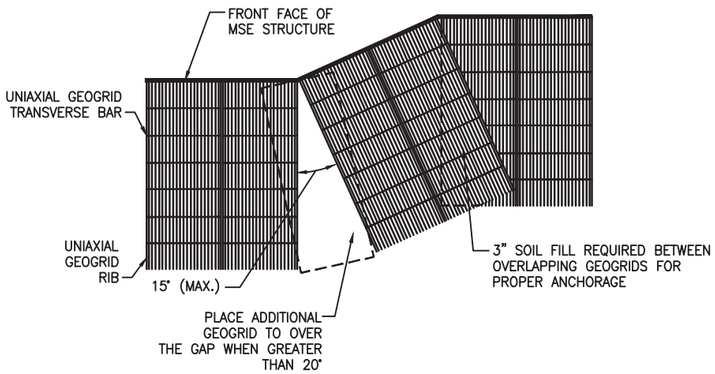

GEOGRID PLACEMENT AT MULTIPLE BENDS DETAIL-PLAN VIEW

NOT TO SCALE

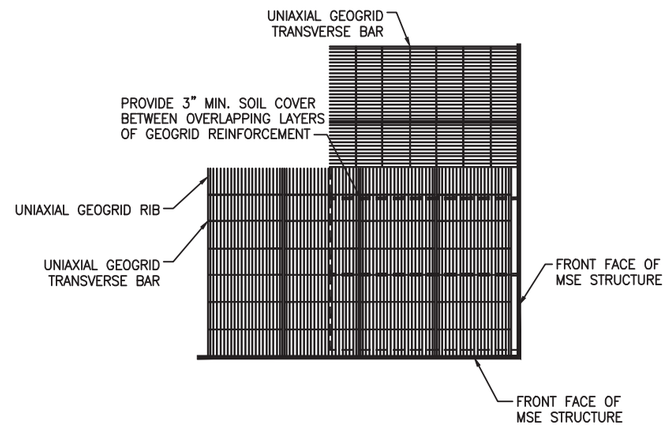

GEOGRID PLACEMENT AT OUTSIDE CORNER DETAIL-PLAN VIEW

NOT TO SCALE

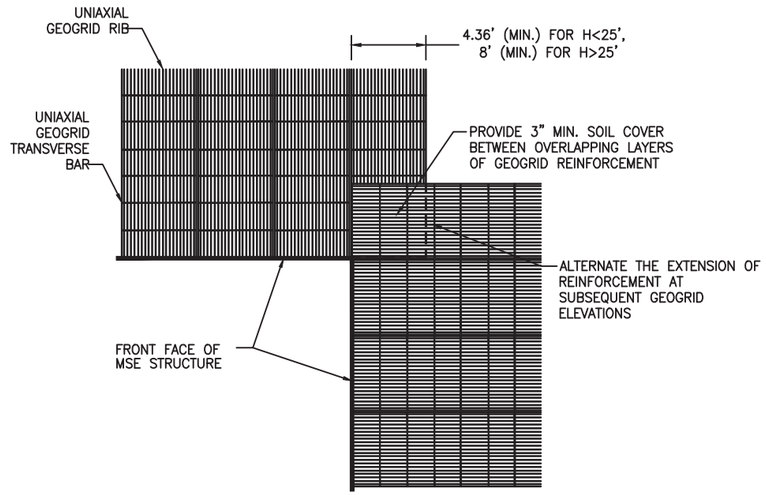

GEOGRID PLACEMENT AT INSIDE CORNER DETAIL-PLAN VIEW

NOT TO SCALE

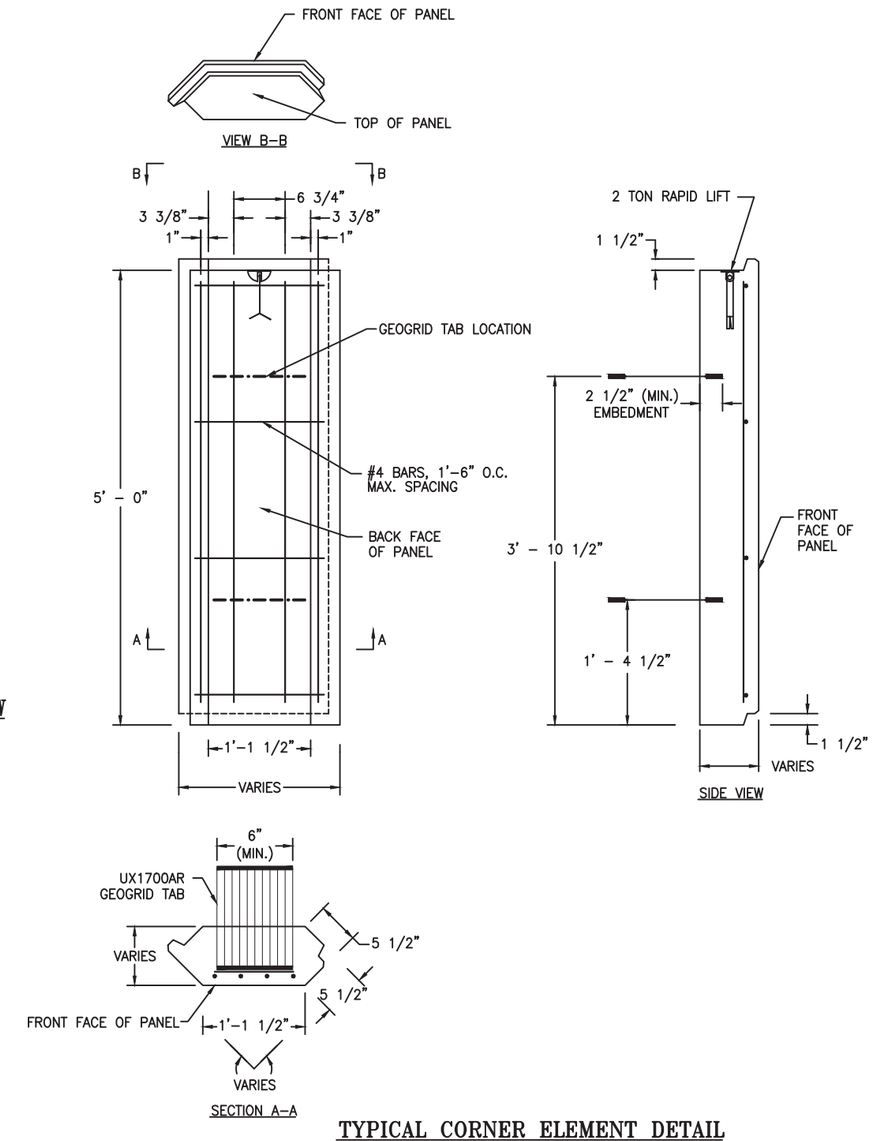

TYPICAL CORNER ELEMENT DETAIL

Scale: N.T.S.

1/17/14

COMMONWEALTH OF PENNSYLVANIA
DEPARTMENT OF TRANSPORTATION
BUREAU OF PROJECT DELIVERY

STANDARD
MECHANICALLY STABILIZED EARTH
RETAINING WALLS
ARES RETAINING WALL SYSTEM

PENNDOT DRAWING # 2011-273PE

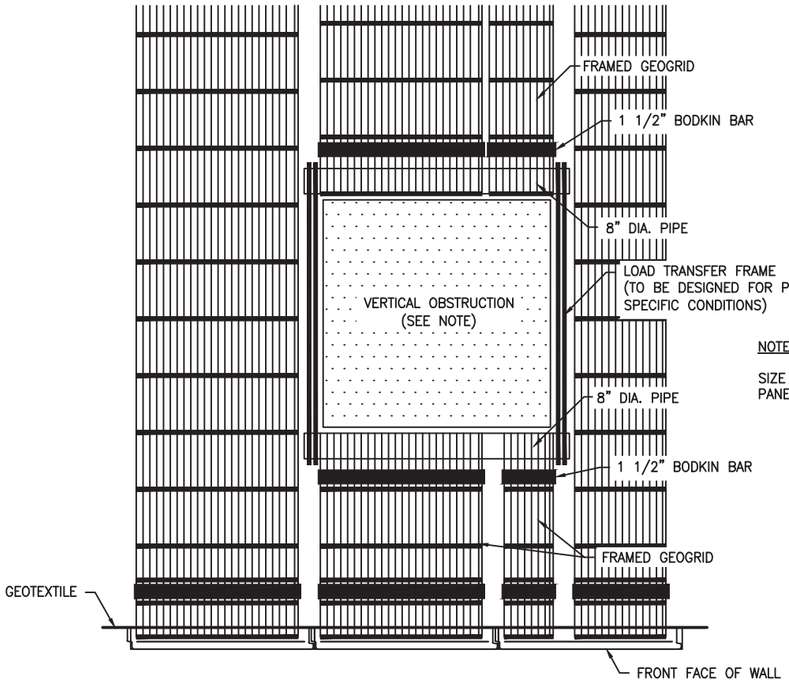

NOTE:

SIZE OF OBSTRUCTION IS LIMITED TO HALF OF THE PANEL WIDTH.

TYPICAL VERTICAL OBSTRUCTION DETAIL – LOAD TRANSFER FRAME

Scale: N.T.S.

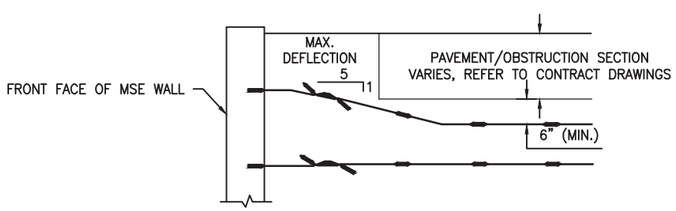

HORIZONTAL PAVEMENT STRUCTURE

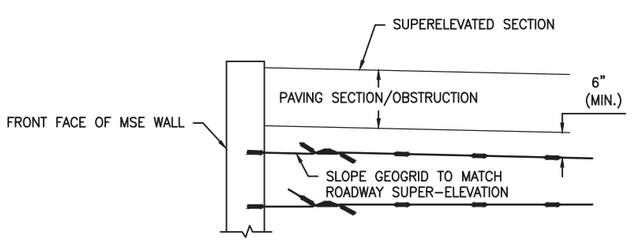

SUPER-ELEVATED PAVEMENT/OBSTRUCTION STRUCTURE

NOTE:

CONTRACTOR IS RESPONSIBLE TO COORDINATE THE PLACEMENT OF THE GEOGRID TO AVOID CONFLICT WITH THE CONTRACT PAVEMENT/OBSTRUCTION SECTION. GEOGRID MUST BE SEPARATED FROM THE PAVEMENT/OBSTRUCTION SECTION BY A MINIMUM OF 6".

GEOGRID PLACEMENT AT PAVEMENT/OBSTRUCTION SECTION

Scale: N.T.S.

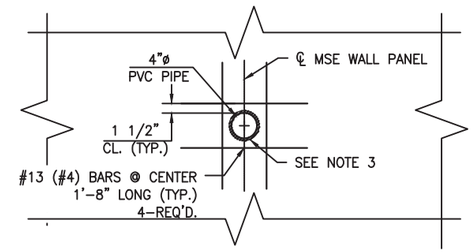

NOTES:

1. DRILL HOLE NO CLOSER THAN 2" FROM GEOGRID TAB.
2. DRILL HOLE 6" (MIN.) FROM TOP OR BOTTOM OF PANEL AT PANEL CENTERLINE.
3. FILL GAP BETWEEN HOLE AND PIPE WITH PENNNDOT APPROVED EPOXY OR NON-SHRINK GROUT.

WEEPHOLE DETAIL

Scale: N.T.S.

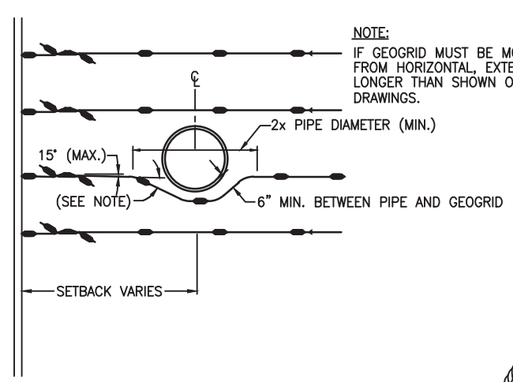

NOTE:

IF GEOGRID MUST BE MORE THAN 15° FROM HORIZONTAL, EXTEND GEOGRID 4'-0" LONGER THAN SHOWN ON CONSTRUCTION DRAWINGS.

TYPICAL OBSTRUCTION AVOIDANCE DETAIL

Scale: N.T.S.

1/17/14

COMMONWEALTH OF PENNSYLVANIA
REGISTERED
PROFESSIONAL
STEPHEN ANDREW LUPTAK
ENGINEER
PE073219

COMMONWEALTH OF PENNSYLVANIA
DEPARTMENT OF TRANSPORTATION
BUREAU OF PROJECT DELIVERY

STANDARD
MECHANICALLY STABILIZED EARTH
RETAINING WALLS
ARES RETAINING WALL SYSTEM

PENNDOT DRAWING # 2011-273PE

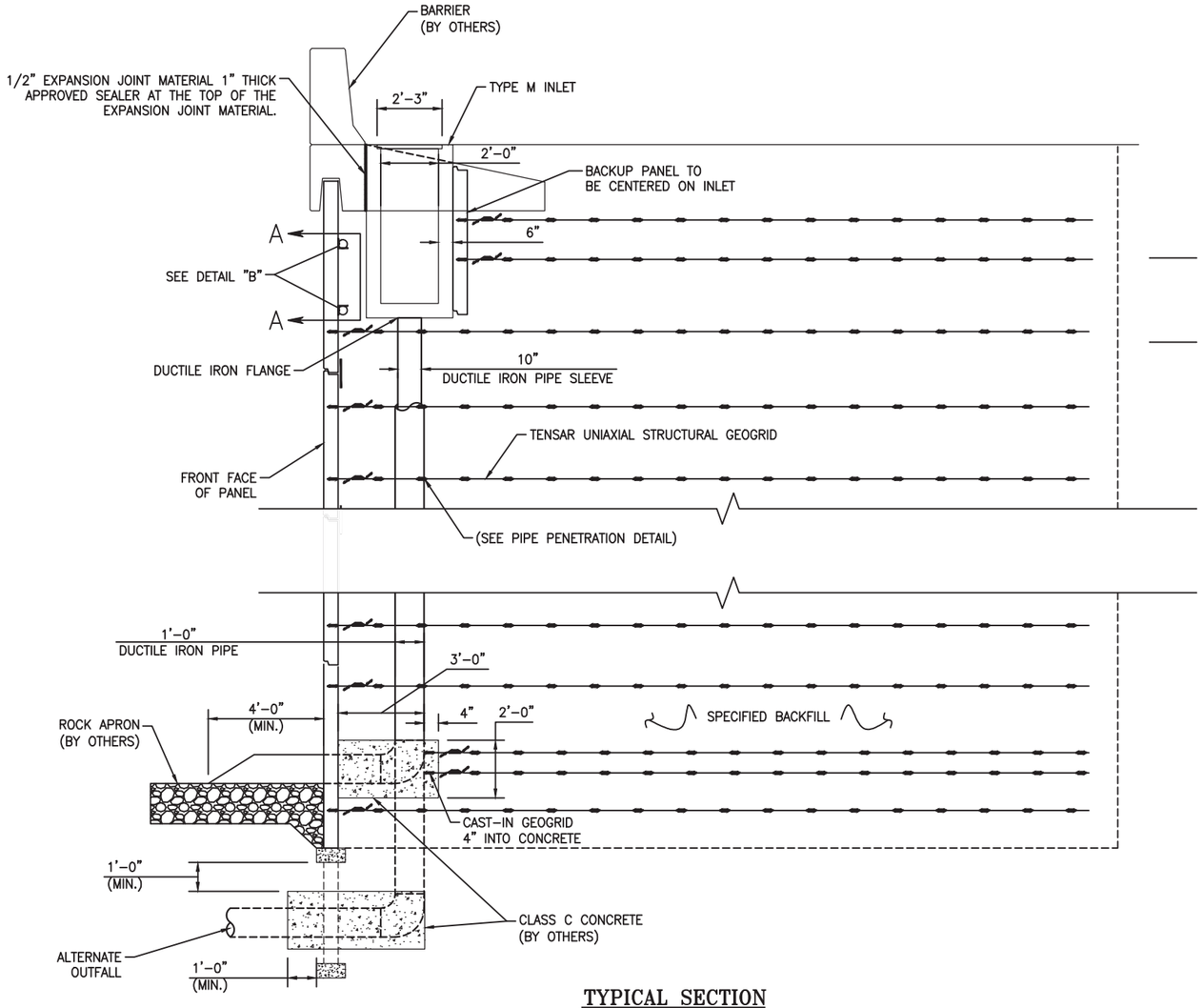

TYPICAL SECTION

Scale: N.T.S.

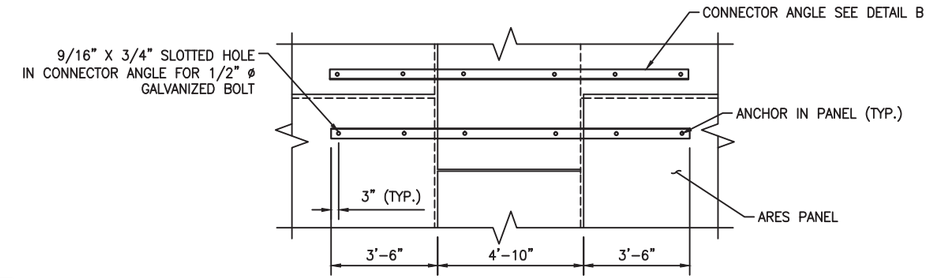

SECTION A-A

Scale: N.T.S.

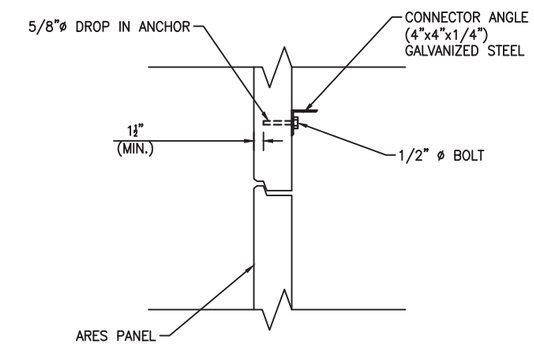

DETAIL B

Scale: N.T.S.

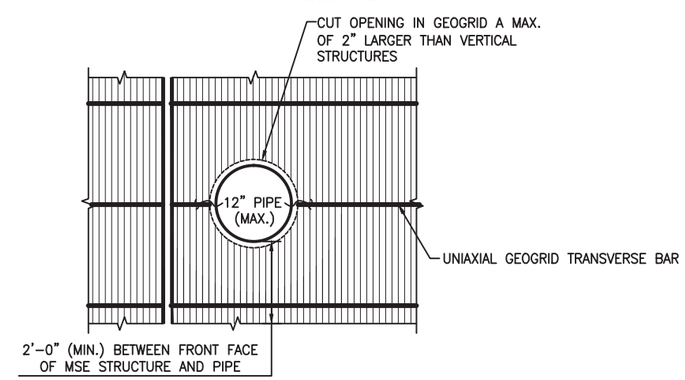

PIPE PENETRATION DETAIL-PLAN VIEW

NOT TO SCALE

NOTES:

1. PROVIDE NONFERROUS OR GALVANIZED PIPE. TAKE SPECIAL CARE IN DETAILING TO MAINTAIN PIPE JOINTS INTACT.
2. TAKE SPECIAL CARE TO PROPERLY COMPACT GRANULAR BACKFILL AROUND PIPE SO AS NOT TO DAMAGE IT. USE LIGHT MECHANICAL TAMPER.
3. THE NUMBER OF BACKUP PANELS ARE TO BE DETERMINED BY THE CONTRACTOR AND APPROVED BY THE ENGINEER.
4. THE COST FOR CONNECTION DEVICES IS INCIDENTAL TO THE BID PRICE FOR CONTRACT ITEMS.
5. GALVANIZED ALL CONNECTOR ANGLES, BOLTS AND ANCHORS.
6. DRAINAGE PIPES WITHIN MECHANICALLY STABILIZED EARTH WALLS IS NOT A PREFERRED CONDITION. DRAINAGE SHOULD BE EXITED OUTSIDE THE WALL IN ACCORDANCE WITH THE INLET BEHIND WALL DETAIL WHENEVER POSSIBLE.

INLET BEHIND WALL

Scale: N.T.S.

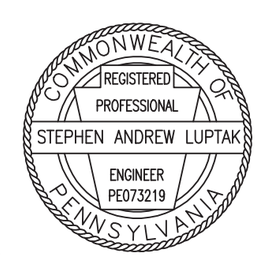

1/17/14

COMMONWEALTH OF PENNSYLVANIA
DEPARTMENT OF TRANSPORTATION
BUREAU OF PROJECT DELIVERY

STANDARD
MECHANICALLY STABILIZED EARTH
RETAINING WALLS
ARES RETAINING WALL SYSTEM

PENNDOT DRAWING # 2011-273PE

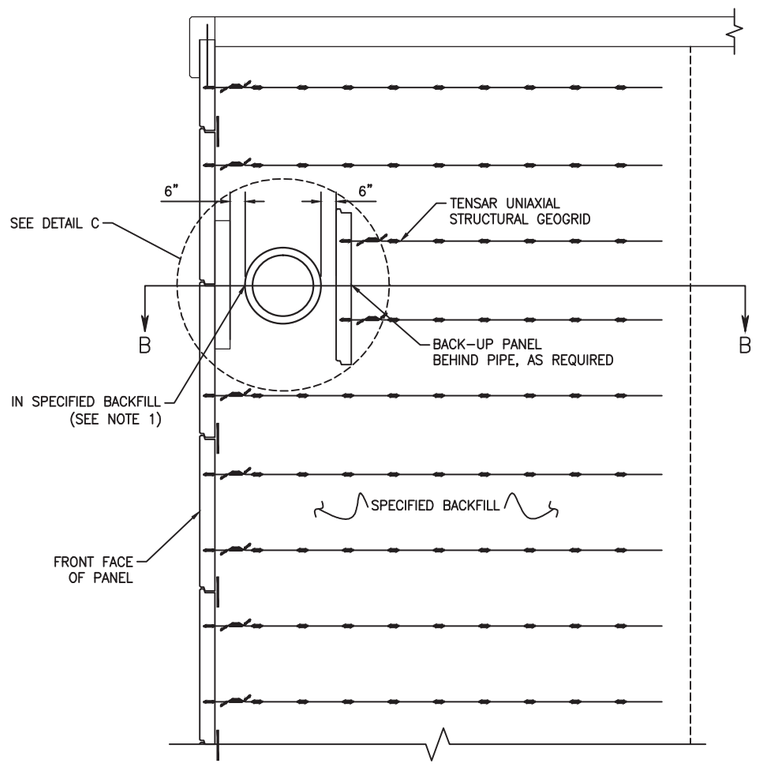

TYPICAL SECTION

Scale: N.T.S.

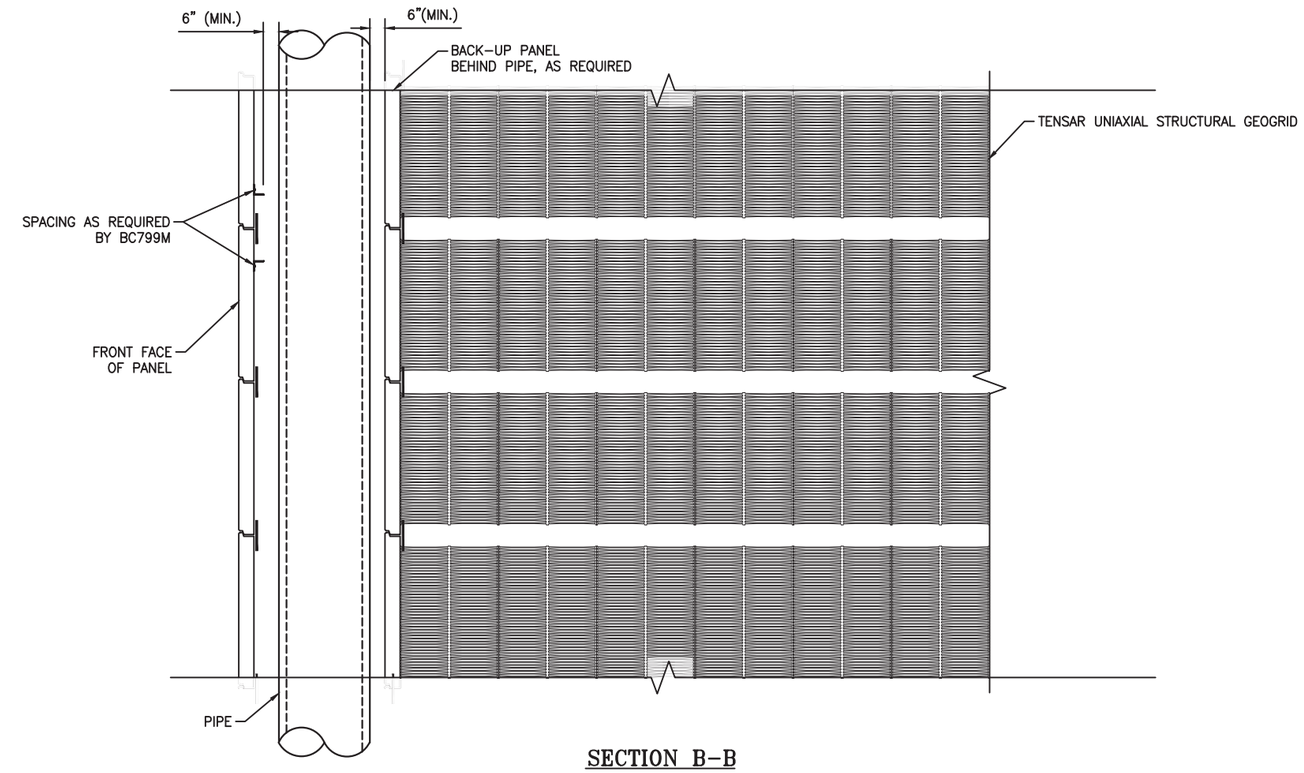

SECTION B-B

Scale: N.T.S.

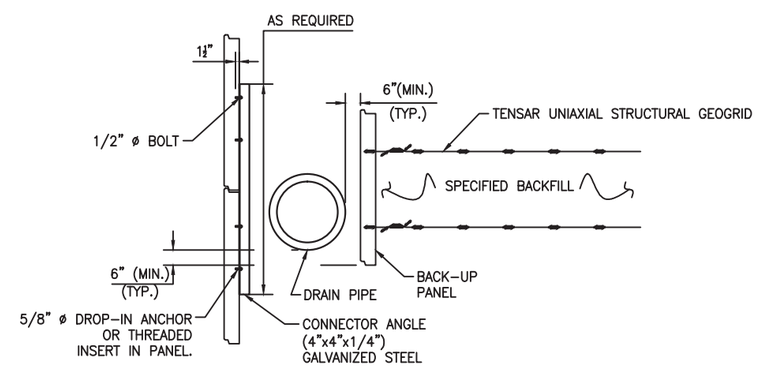

DETAIL C - WITH BACKUP PANEL

Scale: N.T.S.

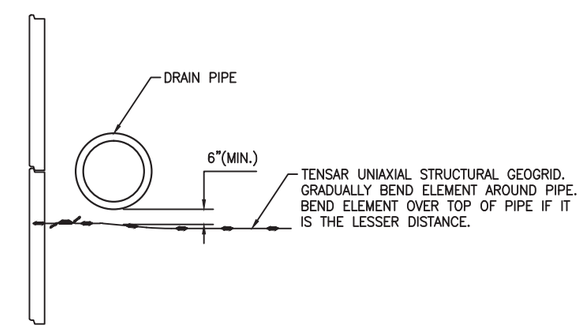

DETAIL C - WITHOUT BACKUP PANEL

Scale: N.T.S.

NOTES:

1. USE FOR PIPES LARGER THAN 12" AND LESS THAN 30" O.D. DRAINAGE INSTALLATIONS WITH PIPES LARGER THAN 30" O.D. REQUIRES APPROVAL FROM THE CHIEF BRIDGE ENGINEER.
2. PROVIDE NONFERROUS OR GALVANIZED PIPE. TAKE SPECIAL CARE IN DETAILING TO MAINTAIN PIPE JOINTS INTACT.
3. TAKE SPECIAL CARE TO PROPERLY COMPACT GRANULAR BACKFILL AROUND PIPE SO AS NOT TO DAMAGE IT. USE LIGHT MECHANICAL TAMPER.
4. THE NUMBER OF BACKUP PANELS ARE TO BE DETERMINED BY THE CONTRACTOR AND APPROVED BY THE ENGINEER.
5. THE COST FOR CONNECTION DEVICES IS INCIDENTAL TO THE BID PRICE FOR CONTRACT ITEMS.
6. GALVANIZED ALL CONNECTOR ANGLES, BOLTS AND ANCHORS.
7. DRAINAGE PIPES WITHIN MECHANICALLY STABILIZED EARTH WALLS IS NOT A PREFERRED CONDITION. DRAINAGE SHOULD BE EXITED OUTSIDE THE WALL IN ACCORDANCE WITH THE INLET BEHIND WALL DETAIL WHENEVER POSSIBLE.

DRAINAGE PIPE BEHIND WALL

Scale: N.T.S.

1/17/14

COMMONWEALTH OF PENNSYLVANIA
REGISTERED
PROFESSIONAL
STEPHEN ANDREW LUPTAK
ENGINEER
PE073219

COMMONWEALTH OF PENNSYLVANIA
DEPARTMENT OF TRANSPORTATION
BUREAU OF PROJECT DELIVERY

STANDARD
MECHANICALLY STABILIZED EARTH
RETAINING WALLS
ARES RETAINING WALL SYSTEM

PENNDOT DRAWING # 2011-273PE

Product:

PA Box Beam WWR Details Standard
Central Atlantic Bridge Associates (CABA)
PennDOT Drawing # 14-601-BDTD

Approval Date:	**Initiated By SOL:**
January 17, 2014	483-14-01

Application/Use:

PA Box Beam Welded Wire Reinforcement (WWR) Details Standard developed by CABA has been approved for use in prestressed concrete box beams. WWR is permitted to provide mild reinforcement in the fabrication of prestressed concrete box beams listed in BD-661M.

Specifications:

Material/Construction Specifications for this product are specified on PennDOT Drawing #14-601-BDTD dated on January 17, 2014 of PA Box Beam WWR Details Standard.

Comments:

None.

General Notes:

The purpose of this standard is to provide details of Welded Wire Reinforcement (WWR) for Prestressed Concrete Bridge Beams that meet the requirements of BD-661M for PA Box Beam Girders. This standard is to show an option of how typical WWR mats could be used in prestressed products. The fabricators may make minor adjustments provided the original intent of the design drawings is still met.

1.0 GENERAL

A. This standard is intended solely to convey additional material and detailing requirements for the use of welded wire reinforcement (WWR) for use in Prestressed box beams. Refer to BD-661M for additional information and details not included in this standard.

B. All WWR Material shall be provided by an approved Bulletin 15 supplier listed in section 709.4.

C. All WWR Material shall conform to PennDOT 408/2011 - Section 709 - Reinforcement Steel.

D. All WWR Material shall be certified to conform to AASHTO M221 (ASTM A 497)

a. No more than one broken weld on the D8 or D10 wires will be allowed per mat. One broken weld can be repaired by tying a #4 A3 bar (stirrup) adjacent to the broken weld. Any mat with more than one broken weld will be rejected.

E. Welded Wire Reinforcement Tolerances

1. Sheet Width: The permissible variation shall not exceed 1/2 inch, center-to-center distance between outside longitudinal wires.

2. Overall Width: The permissible variation shall not exceed 1 inch of the overall width (tip-to-tip length of transverse wire).

3. Sheet Length: The overall length may vary by 1 inch or 1% whichever is greater.

4. Side Overhang: The permissible variation shall not exceed 1/2 inch.

5. Wire Spacing: Center-to-center distance between parallel wires shall not exceed +/- 1/2".

F. Prior to placement of concrete, all welded wire reinforcement shall be free of contaminants that may adversely affect or reduce bond, such as oil or grease.

1.1 Sampling and Testing

A. Certify specified in Section 106.03 (b) 3.

B. When requested by the Department and in advance of production, furnish one or more samples of WWR, at least 4' long and containing a sufficient number of intersections for verification of the Part 7. Mechanical Property Requirements of AASHTO M221, including weld shear strength. Samples must be representative of a weld shear mat.

C. Prestressed Beam Fabricator shall be responsible for geometric verification of WWR mats.

2.0 WELDED WIRE REINFORCEMENT

A. Deformed Welded Wire Reinforcement:

1. WWR Yield Strength: Provide minimum yield strength of 70,000 psi:

2. Wire Spacing and Size: Provide wire spacing and size, as required to maintain the specified area of steel as indicated on the contract drawings.

3. Welded Wire Reinforcement shall be furnished in flat sheets or fabricated into bent sheets as indicated in the shop documents.

4. When a larger wire is welded to a smaller wire the area of the smaller wire shall be at least 40% of the area of the larger wire.

5. Welded Wire Reinforcement can be epoxy coated or galvanized as needed to meet contract requirements.

B. Standard Wire Properties

Wire Size	Unit Weight (lbs/lin. foot)	Diameter (in)	Cross-sectional Area (in^2)
D8	0.272	0.319	0.080
D10	0.340	0.356	0.100
D13	0.442	0.407	0.130
D20(#4)	0.680	0.505	0.200
D31(#5)	1.050	0.628	0.310

1/17/14

PENNSYLVANIA
DEPARTMENT OF TRANSPORTATION
RECOMMENDED

Thomas P Macioce

CHIEF BRIDGE ENGINEER

PENNDOT DRAWING 14-601-BDTD

MARK	DESCRIPTION	BY	CHK'D	RECM'D	DATE

REVISIONS

CENTRAL ATLANTIC BRIDGE ASSOCIATES (CABA)

NORTHEAST PRESTRESSED PRODUCTS, LLC
121 RIVER STREET
CRESSONA, PENNSYLVANIA, 17929
570-385-2352

COMMONWEALTH OF PENNSYLVANIA
DEPARTMENT OF TRANSPORTATION

PA BOX BEAM
WWR DETAILS
STANDARD

DATE: XX
SCALE: N/A
DWG: CK'D:
JOB NO.
SHEET NO.
1 of 7

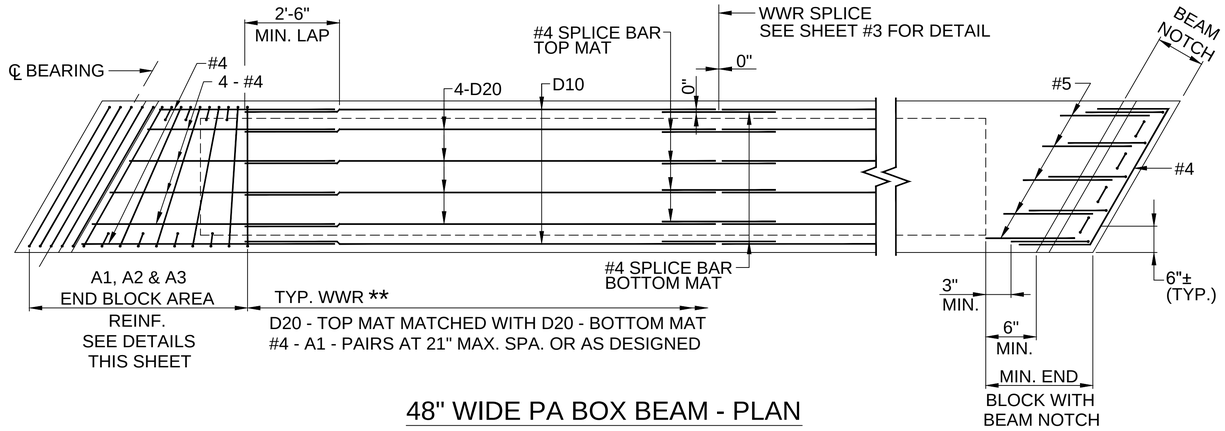

48" WIDE PA BOX BEAM - PLAN

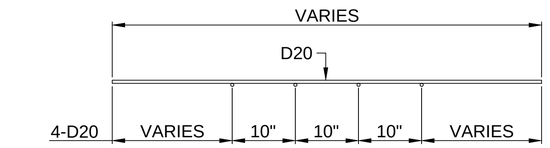

TOP MAT

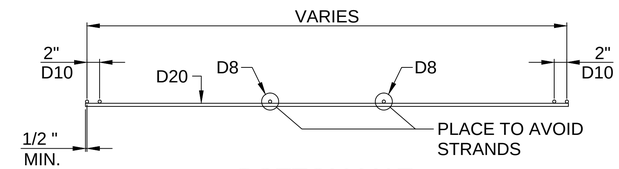

BOTTOM MAT

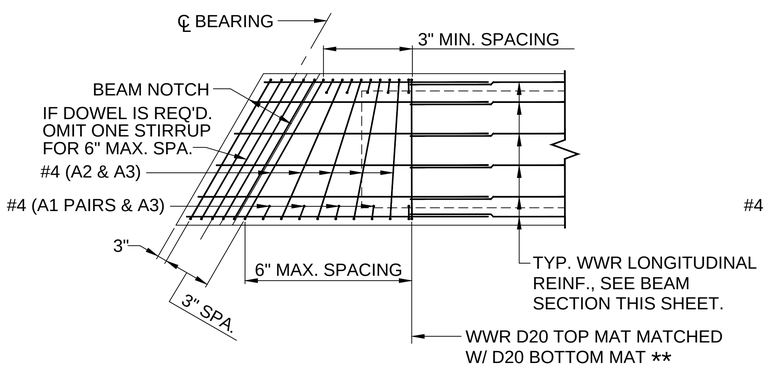

TYPICAL END REINF.
WITH NOTCH

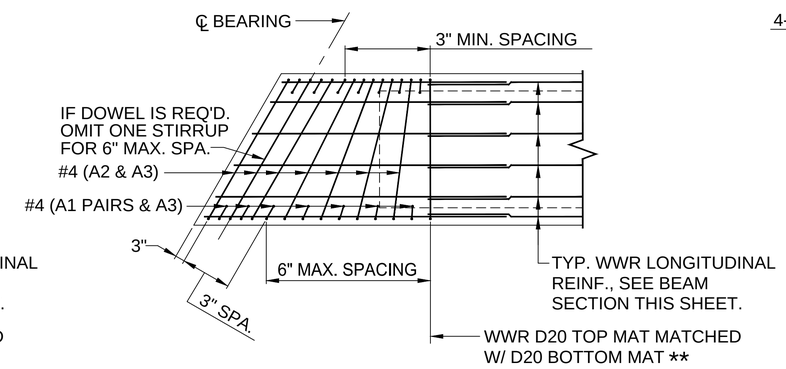

TYPICAL END REINF.
WITHOUT NOTCH

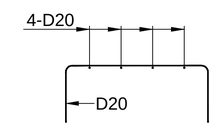

VIEW A-A

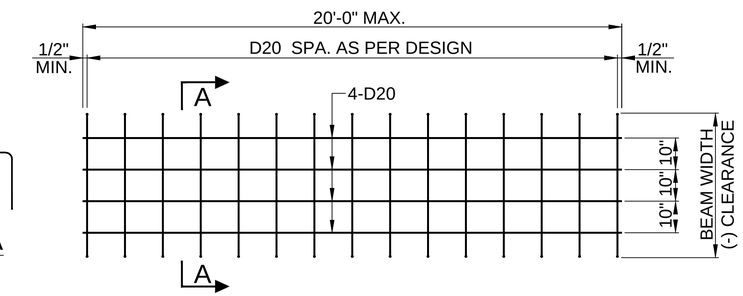

PLAN VIEW - TOP MAT

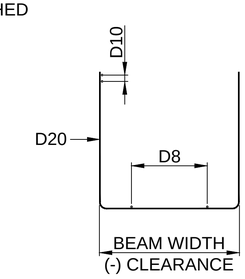

VIEW B-B

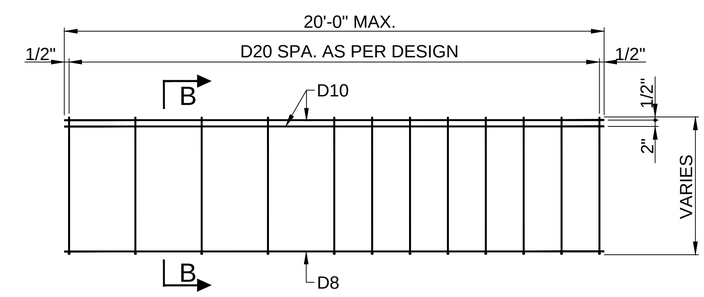

ELEVATION VIEW - BOTTOM MAT

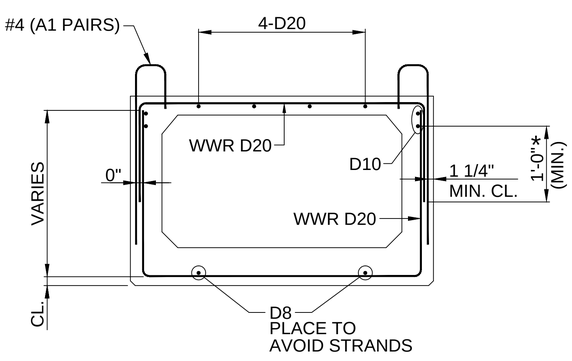

PA SPREAD BOX BEAM - WWR SECTION

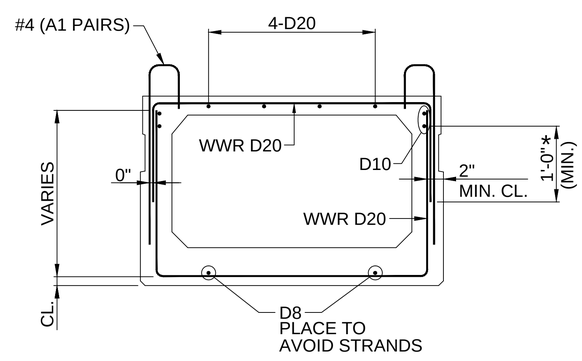

PA ADJACENT BOX BEAM - WWR SECTION

* 12" MIN. LAP FOR BEAM DEPTH 24" & GREATER.
END VERTICAL LEGS 1/4" ABOVE THE TOP OF THE
BOTTOM SLAB FOR BEAMS LESS THAN 24" IN DEPTH.

** WWR MAY BEGIN AT OTHER
LOCATIONS IN THE BEAM.

1/17/14

PENNDOT DRAWING 14-601-BDTD

MARK	DESCRIPTION	BY	CHK'D	RECM'D

REVISIONS

CENTRAL ATLANTIC BRIDGE ASSOCIATES (CABA)

NORTHEAST PRESTRESSED PRODUCTS, LLC
121 RIVER STREET
CRESSONA, PENNSYLVANIA, 17929
570-385-2352

COMMONWEALTH OF PENNSYLVANIA
DEPARTMENT OF TRANSPORTATION

48" WIDE PA BOX BEAM
WWR DETAILS
STANDARD

DATE: XX
SCALE: N/A
DWG: CK'D:
JOB NO.
SHEET NO.
2 of 7

12/10/2013 3:16:54 PM

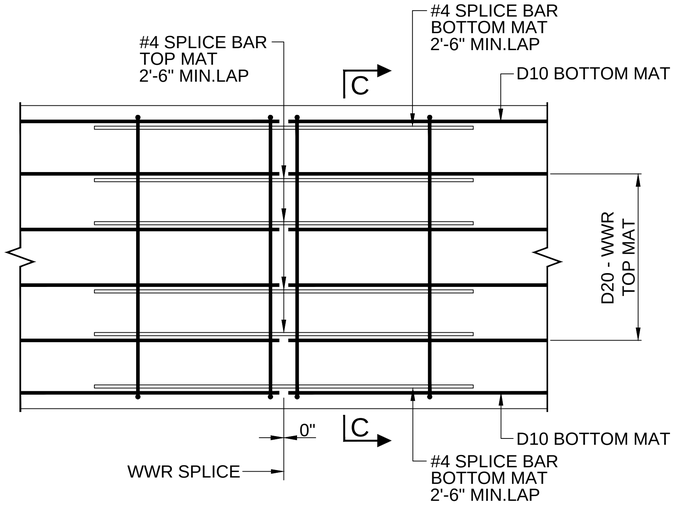

PLAN VIEW - TOP MAT
SPLICE DETAIL

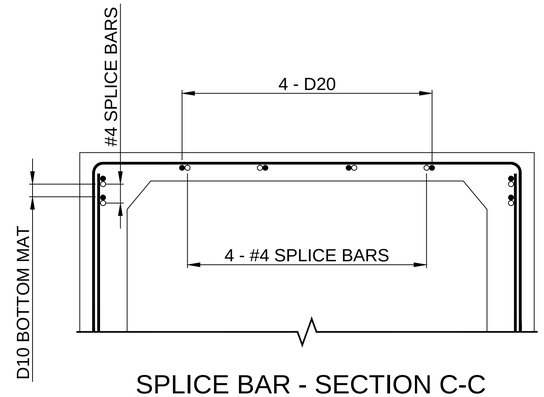

SPLICE BAR - SECTION C-C

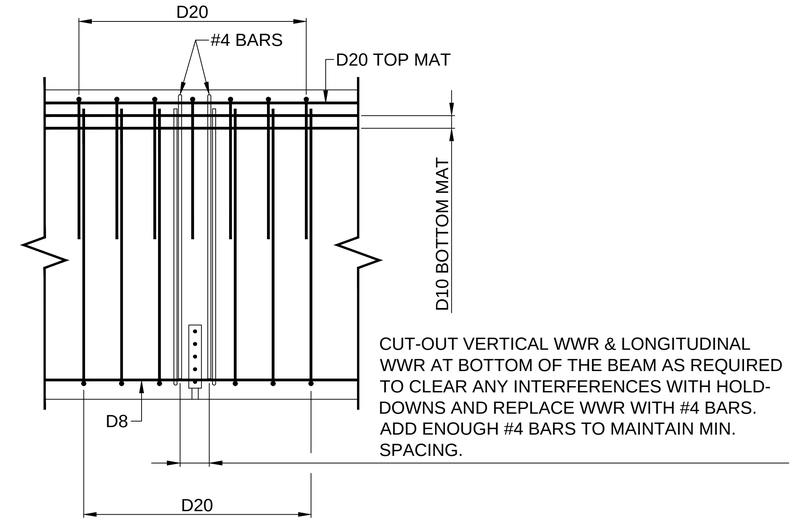

CUT-OUT VERTICAL WWR & LONGITUDINAL WWR AT BOTTOM OF THE BEAM AS REQUIRED TO CLEAR ANY INTERFERENCES WITH HOLD-DOWNS AND REPLACE WWR WITH #4 BARS. ADD ENOUGH #4 BARS TO MAINTAIN MIN. SPACING.

ELEVATION

WWR MODIFICATION DETAIL AT
HOLD DOWNS

* 12" MIN. LAP FOR BEAM DEPTH 24" & GREATER.
END VERTICAL LEGS 1/4" ABOVE THE TOP OF THE
BOTTOM SLAB FOR BEAMS LESS THAN 24" IN DEPTH.

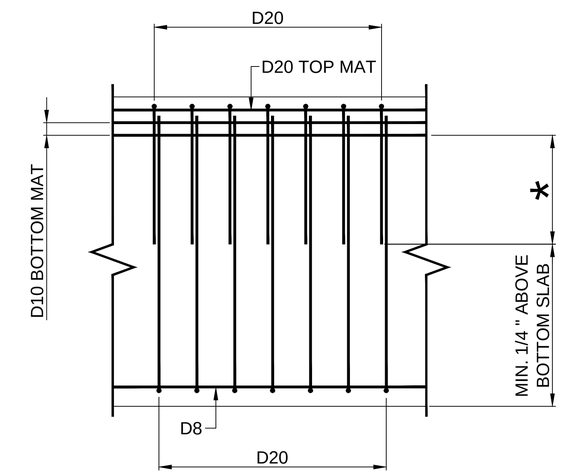

ELEVATION

ELEVATION - TOP & BOTTOM MAT
SHEAR WIRE LAP DETAIL

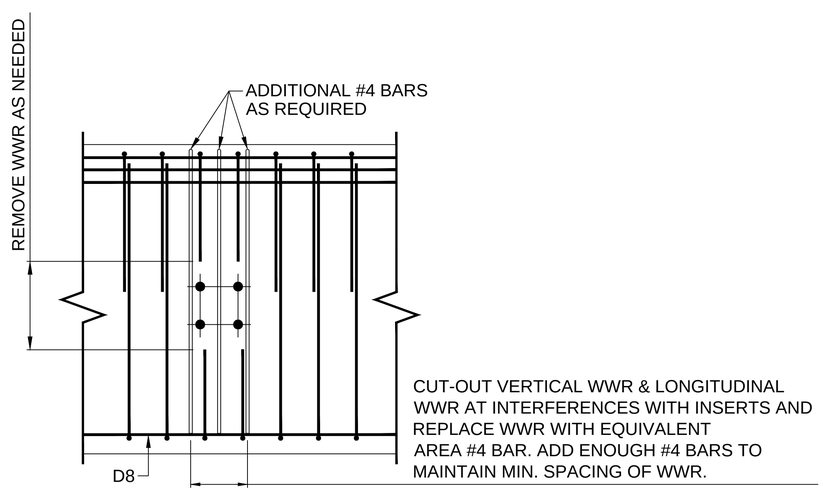

CUT-OUT VERTICAL WWR & LONGITUDINAL WWR AT INTERFERENCES WITH INSERTS AND REPLACE WWR WITH EQUIVALENT AREA #4 BAR. ADD ENOUGH #4 BARS TO MAINTAIN MIN. SPACING OF WWR.

ELEVATION - WWR MODIFICATION DETAIL AT
SHEAR WIRE INTERFERANCE

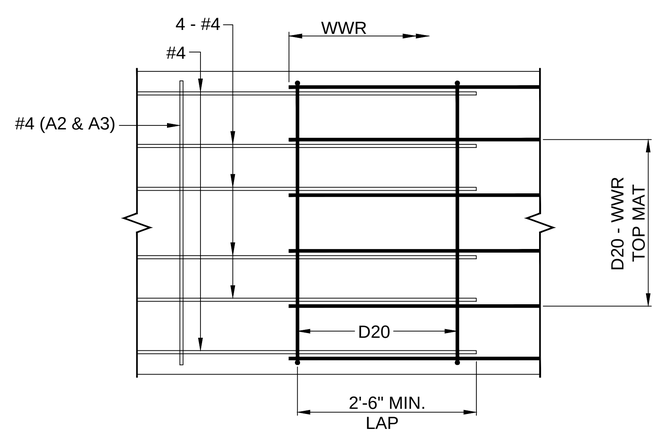

PLAN VIEW - TOP MAT
WWR TO REBAR SPLICE DETAIL

1/17/14 PENNDOT DRAWING 14-601-BDTD

MARK	DESCRIPTION	BY	CHK'D	RECM'D
	REVISIONS			

CENTRAL ATLANTIC BRIDGE ASSOCIATES (CABA)

NORTHEAST PRESTRESSED PRODUCTS, LLC
121 RIVER STREET
CRESSONA, PENNSYLVANIA, 17929
570-385-2352

COMMONWEALTH OF PENNSYLVANIA
DEPARTMENT OF TRANSPORTATION

48" WIDE PA BOX BEAM
WWR DETAILS
STANDARD

DATE: XX
SCALE: N/A
DWG: CK'D:
JOB NO.
SHEET NO. 3 of 7

12/10/2013 3:16:58 PM

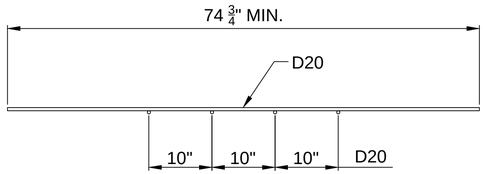

TYPICAL TOP MAT DETAIL
1 1/4" SIDE CLEARANCE

BOTTOM MAT DATA				
1 1/4" SIDE CLEARANCE				
	T2 <6		T2 >6"	
BEAM DEPTH	A	B	A	B
(INCHES)	(INCHES)	(INCHES)	(INCHES)	(INCHES)
24	78	83	76	81
27	84	89	82	87
30	90	95	88	93
33	96	101	94	99
36	102	107	100	105
39	108	113	106	111
42	114	119	112	117
45	120	125	118	123
48	126	131	124	129
51	132	137	130	135
54	138	143	136	141
57	144	149	142	147
60	150	155	148	153
63	156	161	154	159
66	162	167	160	165

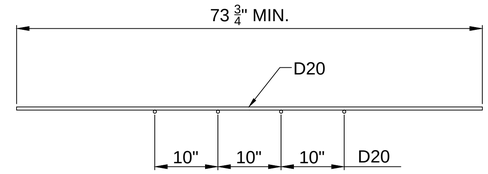

TYPICAL TOP MAT DETAIL
2" SIDE CLEARANCE

BOTTOM MAT DATA				
2" SIDE CLEARANCE				
	T2 <6		T2 >6"	
BEAM DEPTH	A	B	A	B
(INCHES)	(INCHES)	(INCHES)	(INCHES)	(INCHES)
24	76	81	74	79
27	82	87	80	85
30	88	93	86	91
33	94	99	92	97
36	100	105	98	103
39	106	111	104	109
42	112	117	110	115
45	118	123	116	121
48	124	129	122	127
51	130	135	128	133
54	136	141	134	139
57	142	147	140	145
60	148	153	146	151
63	154	159	152	157
66	160	165	158	163

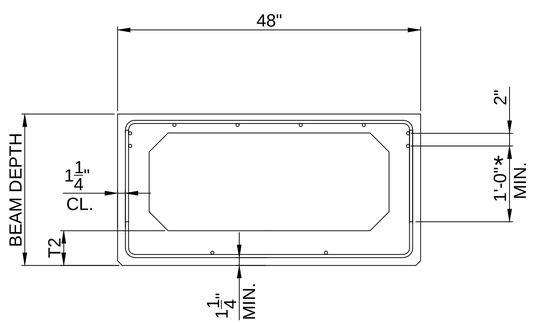

TYPICAL SECTION THRU BEAM
WITH <6" THICK BOTTOM SLAB

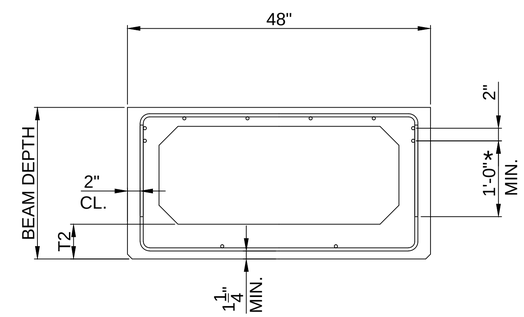

TYPICAL SECTION THRU BEAM
WITH >6" THICK BOTTOM SLAB

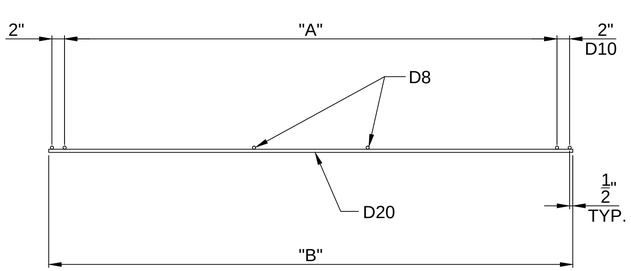

D20 BOTTOM MAT DETAIL

* 12" MIN. LAP FOR BEAM DEPTH 24" & GREATER.
END VERTICAL LEGS 1/4" ABOVE THE TOP OF THE
BOTTOM SLAB FOR BEAMS LESS THAN 24" IN DEPTH.

1/17/14 PENNDOT DRAWING 14-601-BDTD

MARK	DESCRIPTION	BY	CHK'D	RECM'D
	REVISIONS			

CENTRAL ATLANTIC BRIDGE ASSOCIATES (CABA)

NORTHEAST PRESTRESSED PRODUCTS, LLC
121 RIVER STREET
CRESSONA, PENNSYLVANIA, 17929
570-385-2352

COMMONWEALTH OF PENNSYLVANIA
DEPARTMENT OF TRANSPORTATION

48" WIDE PA BOX BEAM
WWR DETAILS
STANDARD

DATE: XX
SCALE: N/A
DWG: CK'D:
JOB NO.
SHEET NO. 4 of 7

12/10/2013 3:17:03 PM

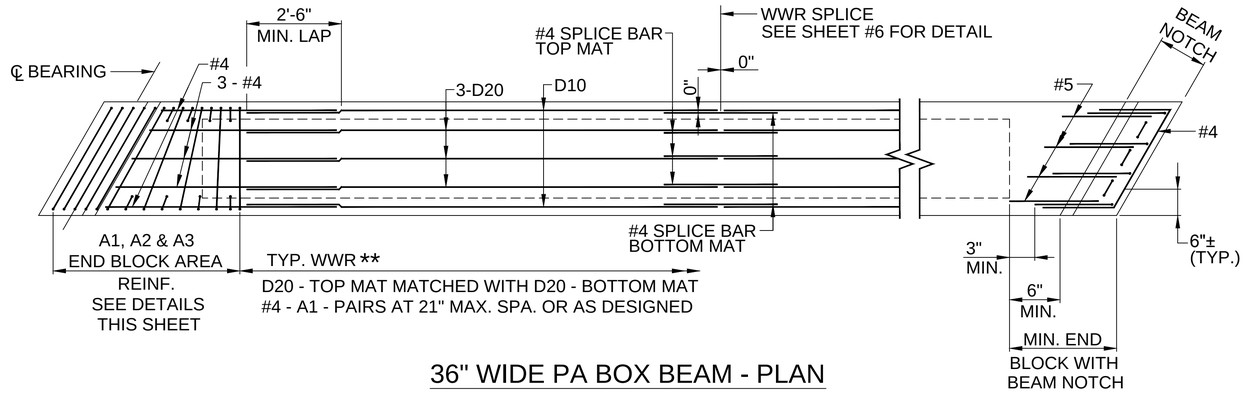

36" WIDE PA BOX BEAM - PLAN

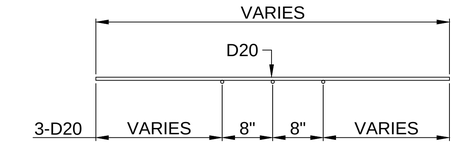

TOP MAT

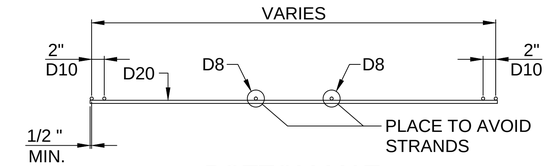

BOTTOM MAT

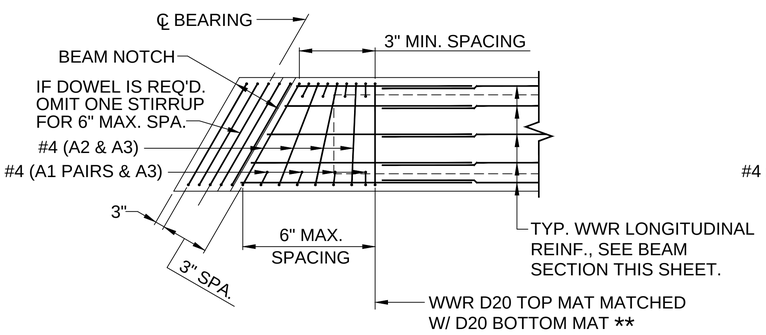

TYPICAL END REINF.
WITH NOTCH

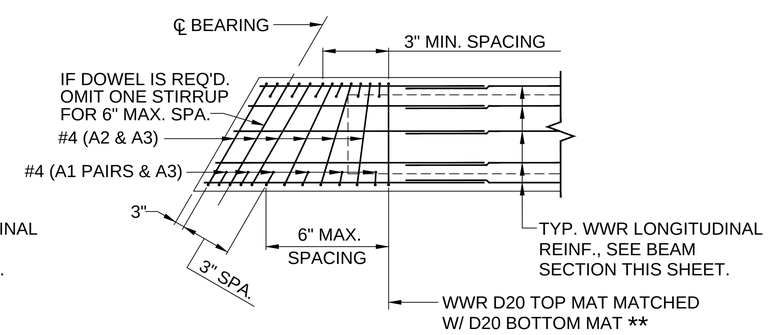

TYPICAL END REINF.
WITHOUT NOTCH

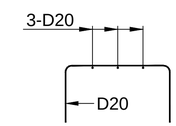

VIEW A-A

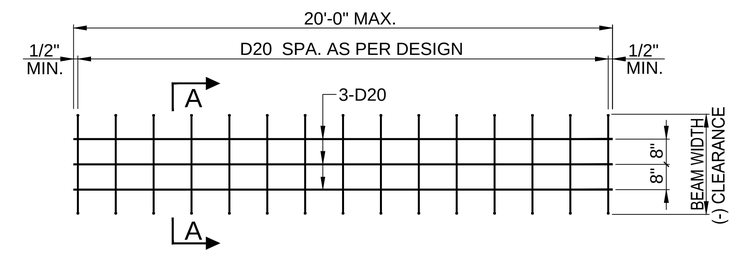

PLAN VIEW - TOP MAT

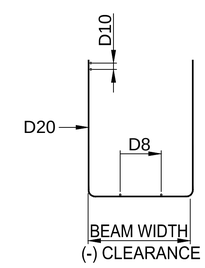

VIEW B-B

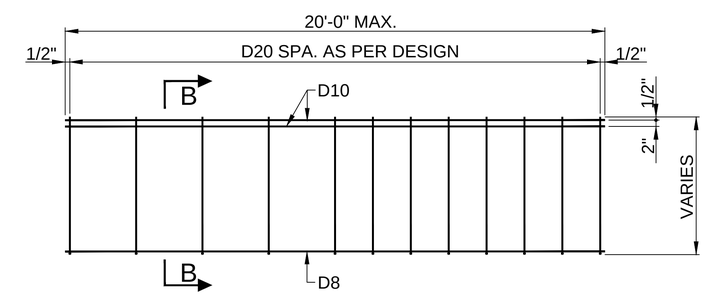

ELEVATION VIEW - BOTTOM MAT

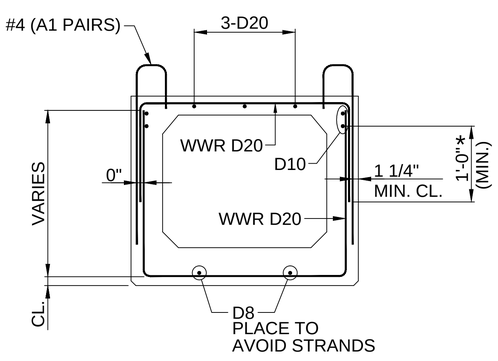

PA SPREAD BOX BEAM - WWR SECTION

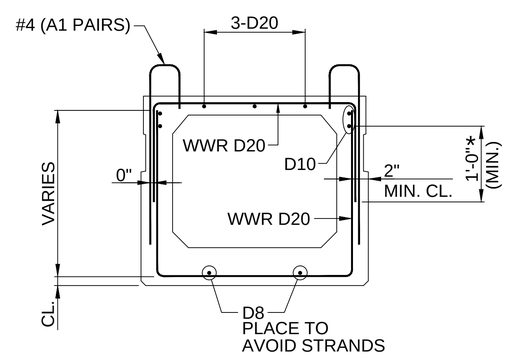

PA ADJACENT BOX BEAM - WWR SECTION

* 12" MIN. LAP FOR BEAM DEPTH 24" & GREATER. END VERTICAL LEGS 1/4" ABOVE THE TOP OF THE BOTTOM SLAB FOR BEAMS LESS THAN 24" IN DEPTH.

** WWR MAY BEGIN AT OTHER LOCATIONS IN THE BEAM.

PENNDOT DRAWING 14-601-BDTD

1/17/14

MARK	DESCRIPTION	BY	CHK'D	RECM'D

REVISIONS

CENTRAL ATLANTIC BRIDGE ASSOCIATES (CABA)

NORTHEAST PRESTRESSED PRODUCTS, LLC
121 RIVER STREET
CRESSONA, PENNSYLVANIA, 17929
570-385-2352

COMMONWEALTH OF PENNSYLVANIA
DEPARTMENT OF TRANSPORTATION

36" WIDE PA BOX BEAM
WWR DETAILS
STANDARD

DATE: XX
SCALE: N/A
DWG: CK'D:
JOB NO.
SHEET NO. 5 of 7

12/10/2013 3:17:08 PM

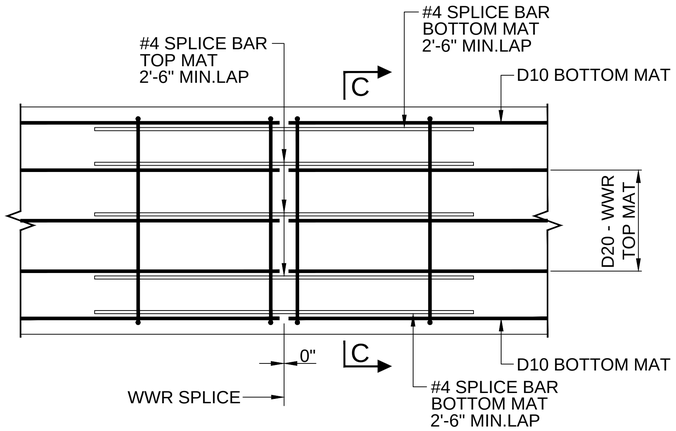

PLAN VIEW - TOP MAT
SPLICE DETAIL

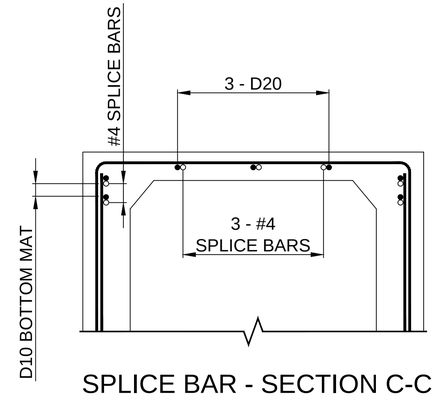

SPLICE BAR - SECTION C-C

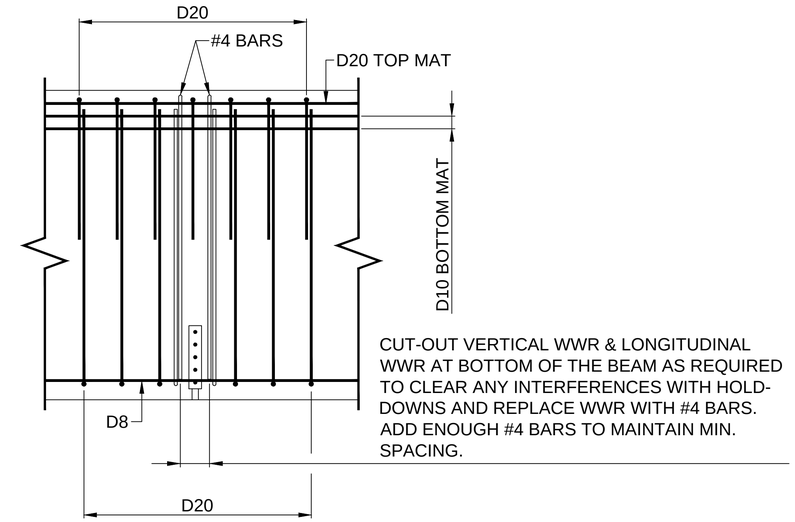

CUT-OUT VERTICAL WWR & LONGITUDINAL WWR AT BOTTOM OF THE BEAM AS REQUIRED TO CLEAR ANY INTERFERENCES WITH HOLD-DOWNS AND REPLACE WWR WITH #4 BARS. ADD ENOUGH #4 BARS TO MAINTAIN MIN. SPACING.

ELEVATION

WWR MODIFICATION DETAIL AT
HOLD DOWNS

* 12" MIN. LAP FOR BEAM DEPTH 24" & GREATER.
END VERTICAL LEGS 1/4" ABOVE THE TOP OF THE
BOTTOM SLAB FOR BEAMS LESS THAN 24" IN DEPTH.

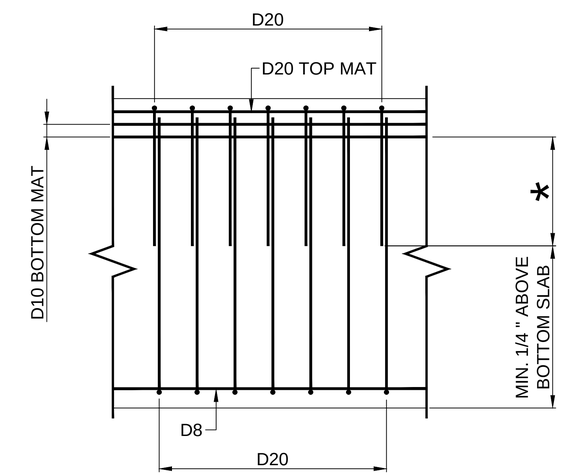

ELEVATION

ELEVATION - TOP & BOTTOM MAT
SHEAR WIRE LAP DETAIL

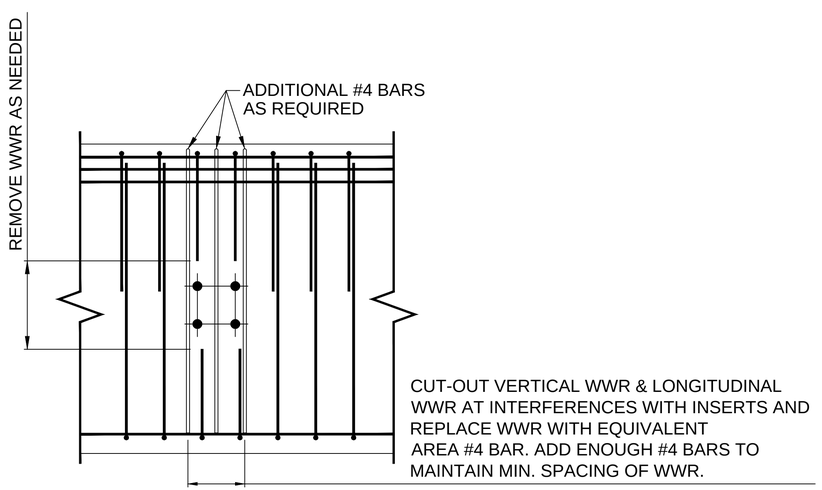

CUT-OUT VERTICAL WWR & LONGITUDINAL WWR AT INTERFERENCES WITH INSERTS AND REPLACE WWR WITH EQUIVALENT AREA #4 BAR. ADD ENOUGH #4 BARS TO MAINTAIN MIN. SPACING OF WWR.

ELEVATION - WWR MODIFICATION DETAIL AT
SHEAR WIRE INTERFERANCE

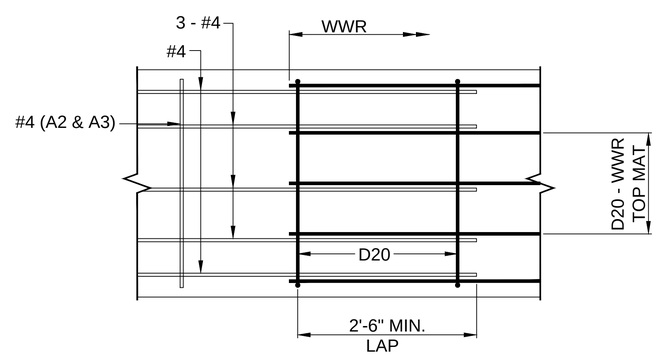

PLAN VIEW - TOP MAT
WWR TO REBAR SPLICE DETAIL

1/17/14 PENNDOT DRAWING 14-601-BDTD

MARK	DESCRIPTION	BY	CHK'D	RECM'D

REVISIONS

CENTRAL ATLANTIC BRIDGE ASSOCIATES (CABA)

NORTHEAST PRESTRESSED PRODUCTS, LLC
121 RIVER STREET
CRESSONA, PENNSYLVANIA, 17929
570-385-2352

COMMONWEALTH OF PENNSYLVANIA
DEPARTMENT OF TRANSPORTATION

36" WIDE PA BOX BEAM
WWR DETAILS
STANDARD

DATE: XX
SCALE: N/A
DWG: CK'D:
JOB NO.
SHEET NO. 6 of 7

12/10/2013 3:17:13 PM

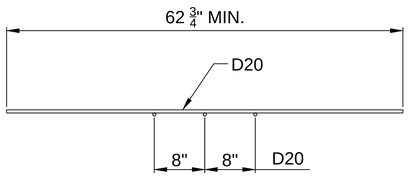

TYPICAL TOP MAT DETAIL
1 1/4" SIDE CLEARANCE

BOTTOM MAT DATA				
1 1/4" SIDE CLEARANCE				
	T2 <6		T2 >6"	
BEAM DEPTH	A	B	A	B
(INCHES)	(INCHES)	(INCHES)	(INCHES)	(INCHES)
24	66	71	64	69
27	72	77	70	75
30	78	83	76	81
33	84	89	82	87
36	90	95	88	93
39	96	101	94	99
42	102	107	100	105
45	108	113	106	111
48	114	119	112	117
51	120	125	118	123
54	126	131	124	129
57	132	137	130	135
60	138	143	136	141
63	144	149	142	147
66	150	155	148	153

NOTE:
OTHER DEPTH BEAMS MAY BE PERMITTED PROVIDED THEY MEET THE ORIGINAL INTENT OF THE CONTRACT DRAWINGS. TYPICAL FOR BOTH 1 1/4" AND 2" SIDE CLEARANCE.

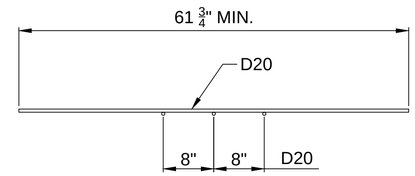

TYPICAL TOP MAT DETAIL
2" SIDE CLEARANCE

BOTTOM MAT DATA				
2" SIDE CLEARANCE				
	T2 <6		T2 >6"	
BEAM DEPTH	A	B	A	B
(INCHES)	(INCHES)	(INCHES)	(INCHES)	(INCHES)
24	64	69	62	67
27	70	75	68	73
30	76	81	74	79
33	82	87	80	85
36	88	93	86	91
39	94	99	92	97
42	100	105	98	103
45	106	111	104	109
48	112	117	110	115
51	118	123	116	121
54	124	129	122	127
57	130	135	128	133
60	136	141	134	139
63	142	147	140	145
66	148	153	146	151

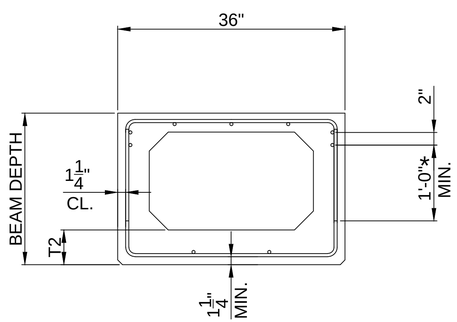

TYPICAL SECTION THRU BEAM
WITH <6" THICK BOTTOM SLAB

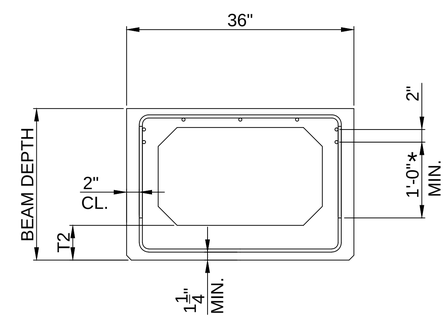

TYPICAL SECTION THRU BEAM
WITH >6" THICK BOTTOM SLAB

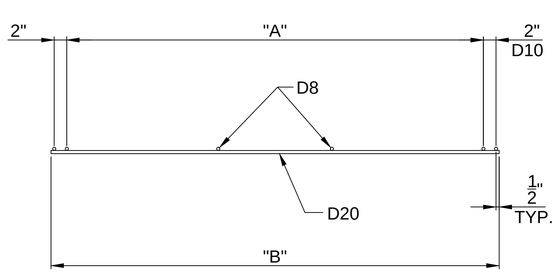

D20 BOTTOM MAT DETAIL

* 12" MIN. LAP FOR BEAM DEPTH 24" & GREATER.
END VERTICAL LEGS 1/4" ABOVE THE TOP OF THE BOTTOM SLAB FOR BEAMS LESS THAN 24" IN DEPTH.

1/17/14 PENNDOT DRAWING 14-601-BDTD

MARK	DESCRIPTION	BY	CHK'D	RECM'D
	REVISIONS			

CENTRAL ATLANTIC BRIDGE ASSOCIATES (CABA)

NORTHEAST PRESTRESSED PRODUCTS, LLC
121 RIVER STREET
CRESSONA, PENNSYLVANIA, 17929
570-385-2352

COMMONWEALTH OF PENNSYLVANIA
DEPARTMENT OF TRANSPORTATION

36" WIDE PA BOX BEAM
WWR DETAILS
STANDARD

DATE: XX
SCALE: N/A
DWG: CK'D:
JOB NO.
SHEET NO. 7 of 7

12/10/2013 3:17:18 PM

Product:

Item 9000-7031 – Acrylite Soundstop Structure Mounted Sound Barrier System
Evonik Cyro LLC
PADOT Drawing # 2012-050A PE

Approval Date:	**Initiated By SOL:**
May 1, 2014	483-14-02

Application/Use:

Acrylite Soundstop Structure Mounted Sound Barrier System manufactured by Evonik Cyro LLC Sanford, ME has been approved for use as an "**Alternate"** or "**As-designed"** sound barrier. This wall has transparent panels. The use as an "Alternate" or "As-designed" sound barrier is at the discretion of the District Executive.

Acrylite Soundstop Structure Mounted Sound Barrier System has the following restrictions:

- Maximum panel height: 6ft-6in
- Maximum wall height and post spacing

Bridge barrier mounted:
Wall height: 2ft thru 9ft; Post spacing: 10ft
Wall height: >9ft thru 10ft; Post spacing: 8ft

Retaining wall barrier or moment slab barrier mounted:
Wall height: 2ft thru 12ft; Post spacing: 10ft
Wall height: >12ft thru 13ft; Post spacing: 8ft

Retaining wall mounted:
Wall height: 2ft thru 13ft; Post spacing: 10ft

This sound barrier wall system meets both AASHTO and Design Manual, Part 4 design criteria.

Specifications:

Design/Material/Construction Specifications for this post and panel sound barrier wall system are specified on PADOT Drawing #2012-050A PE, dated May 1, 2014. In addition, see applicable sections of Publication 408, Section 1086 – SOUND BARRIERS.

Comments:

On those projects permitting the use of this system as an alternate, a special provision should be included in the proposal to indicate that the "Acrylite Soundstop Structure Mounted Sound Barrier System" as an alternate is allowed.

The contractor will be required to revise the pertinent contract drawings as per DM-4M, PP 1.10 to show the usage of "Acrylite Soundstop Structure Mounted Sound Barrier System" and will also be required to reimburse the Department a fee of $1000 per design for the review and approval of the revision. This should be specified in the contract's Special Provisions.

GENERAL NOTES

1. CONSTRUCTION SPECIFICATIONS AND WORKMANSHIP: PROVIDE MATERIALS AND PERFORM WORK IN ACCORDANCE WITH THE CURRENT VERSION OF PENNSYLVANIA DEPARTMENT OF TRANSPORTATION PUBLICATION 408, AASHTO/AWS/D1.5 BRIDGE WELDING CODE, AND THE CONTRACT SPECIAL PROVISIONS. USE AWS/D1.1 FOR WELDING NOT COVERED IN AASHTO/AWS/D1.5.

2. DESIGN SPECIFICATIONS:
   - PENNDOT DESIGN MANUAL, PART 4, STRUCTURES.
   - 1989 AASHTO "GUIDE SPECIFICATIONS FOR STRUCTURAL DESIGN OF SOUND BARRIERS, INCLUDING THE 1992 AND 2002 INTERIMS.
   - 1992 AASHTO "STANDARD SPECIFICATIONS FOR HIGHWAY BRIDGES", 15TH EDITION, INCLUDING THE 1993 AND 1994 INTERIMS.
   - 2001 AASHTO "STANDARD SPECIFICATIONS FOR STRUCTURAL SUPPORTS FOR HIGHWAY SIGNS, LUMINARIES, AND TRAFFIC SIGNALS", 4TH EDITION, INCLUDING THE 2002 AND 2003 INTERIMS.
   - DESIGN IS IN ACCORDANCE WITH THE WORKING STRESS METHOD, WITH NO INCREASE IN ALLOWABLE UNIT STRESSES, EXCEPT FOR GROUP III (SEISMIC) LOADINGS WHICH PERMIT A 33% OVERSTRESS.
   - PENNDOT STANDARD DRAWING BD-679M.
   - ACRYLITE® SOUNDSTOP GSCC NOISE BARRIER SHEET: REFER TO PRODUCT SPECIFICATIONS BY EVONIK CYRO LLC, 299 JEFFERSON ROAD, PARSIPPANY, NJ 07054.

3. DESIGN LOADS:

		ALLOWABLE OVERSTRESS
GROUP 1:	D+E+SC	100%
GROUP 2:	D+W+SC+E	100%
GROUP 3:	D+EQD+E	133%
GROUP 4:	D+W+E+I	100%

   WHERE D = DEAD LOAD
   E = LATERAL EARTH PRESSURE (= 0)
   SC = LIVE LOAD SURCHARGE (= 0)
   W = WIND LOAD (= 37 PSF)
   EQD = SEISMIC DEAD LOAD (ACCELERATION COEFFICIENT "A" = 0.15)
   I = ICE AND SNOW LOAD (= 3 PSF APPLIED TO ONE SIDE OF PANEL)

4. ALL DIMENSIONS SHOWN ARE HORIZONTAL OR VERTICAL, EXCEPT AS NOTED.

5. MATERIALS:
   - PROVIDE STRUCTURAL STEEL PLATES AND SHAPES CONFORMING TO AASHTO M270, GRADE 50 (ASTM A709, GRADE 50), EXCEPT AS NOTED.
   - PROVIDE STRUCTURAL STEEL TUBES CONFORMING TO A500, GRADE B, EXCEPT AS NOTED.
   - GALVANIZE ALL STEEL AND HARDWARE IN ACCORDANCE WITH ASTM A123 (PLATES AND SHAPES) OR A153 (BOLTS AND HARDWARE).

6. CLEAN AND PREPARE GALVANIZED SURFACES IN ACCORDANCE WITH SECTION 1060.3(B)4 OF PUBLICATION 408 AND MANUFACTURER'S REQUIREMENTS FOR COATING GALVANIZED METAL, WHEN ADDITIONAL COATINGS ARE REQUIRED.

7. HORIZONTAL STIFFENER DEFLECTION LIMITED TO THE POST SPACING DIVIDED BY 360.

8. ALL CONNECTIONS ARE DESIGNED AS BEARING CONNECTIONS, UNLESS INDICATED OTHERWISE.

9. ACRYLITE® SOUNDSTOP SOUND BARRIER SYSTEM HAS NOT BEEN DESIGNED FOR A VEHICLE IMPACT LOAD.

10. POST SIZE AND POST CONNECTION TO THE RETAINING WALL/BARRIER PER THE STANDARD DRAWINGS (BC's & BD's). POSTS MUST BE SET WITHIN ±¼" OF PLAN. VARIANCES FROM POST TO POST CANNOT ADD UP TO MORE THAN ±¼". △1

~~11. ALL BOLTS ARE ⅝" DIA. ASTM A325 UNLESS INDICATED OTHERWISE.~~ △1

SUGGESTED INSTALLATION NOTES

1. SLIDE BOTTOM HORIZONTAL STIFFENER INTO POSITION BETWEEN POST FLANGES AND BOLT INTO POSITION.
2. INSTALL LOWER NOISE BARRIER CLEAR SHEET.
3. SLIDE MIDDLE HORIZONTAL STIFFENER (IF REQUIRED) INTO POSITION BETWEEN POST FLANGES AND BOLT INTO POSITION.
4. INSTALL UPPER NOISE BARRIER CLEAR SHEET (IF REQUIRED).
5. INSTALL TOP STIFFENER.
6. INSTALL VERTICAL ANGLES, CONNECTING TO POST.
7. INSTALL CORNER CABLES.
8. INSTALL CONNECTION PLATES ON HORIZONTAL STIFFENERS BETWEEN POSTS.

DESIGN TABLE

SOUND BARRIER MOUNTED ON...	WALL HEIGHT	POST SPACING
TRAFFIC BARRIER ON BRIDGE	2'-0 THRU 9'-0"	10'-0"
	>9'-0" THRU 10'-0"	8'-0"
TRAFFIC BARRIER ON RETAINING WALLS OR MOMENT SLABS	2'-0" THRU 12'-0"	10'-0"
	>12'-0" THRU 13'-0"	8'-0"
RETAINING WALL	2'-0" THRU 13'-0"	10'-0"

11. ALL BOLTS ARE ⅝" DIA. ASTM A325 OR A325T UNLESS INDICATED OTHERWISE. BOLTS SHALL BE PRETENSIONED WITH THE TURN OF NUT METHOD PER THE LATEST VERSION OF THE SPECIFICATION FOR STRUCTURAL JOINTS USING ASTM A325 OR A490 BOLTS BY THE RESEARCH COUNCIL ON STRUCTURAL CONNECTIONS. △1

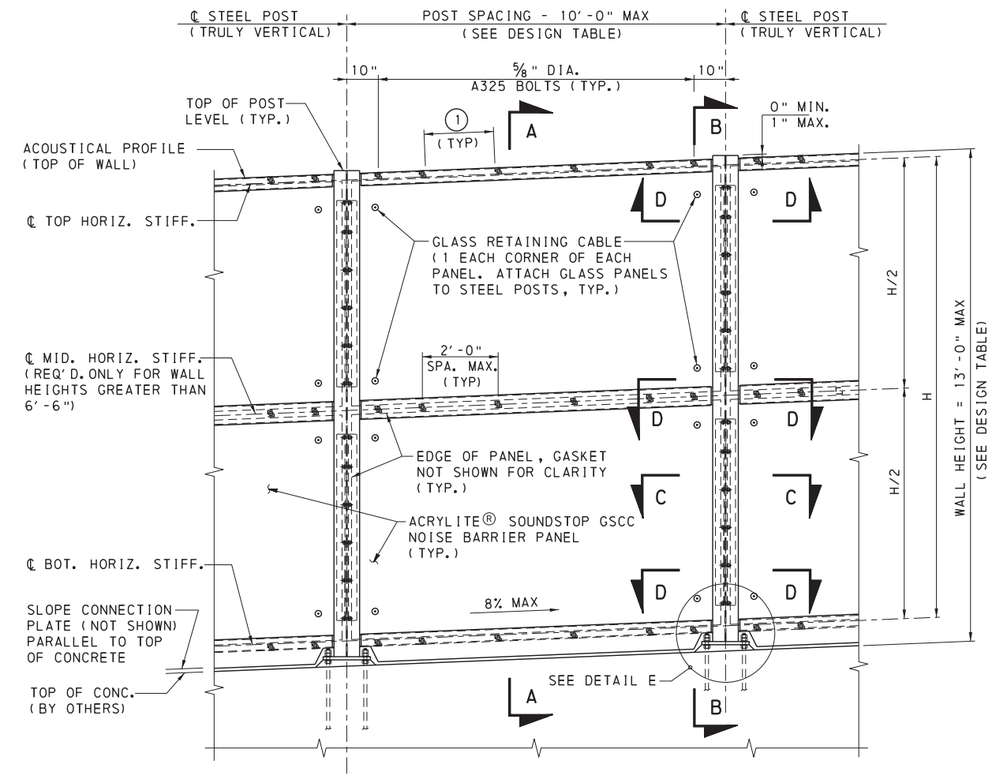

ELEVATION - STRUCTURE MOUNTED SOUND BARRIER

1'6" 0 1' 2' 3' 4' 5'
½" = 1'-0"

LEGEND:

1 – USE CLOSED CELL NEOPRENE SPONGE AND CAULKING COMPOUND, CONTINUOUS BETWEEN 1"x2"x2" PLATES ON TOP STIFFENER. GLUE SPONGE TO STIFFENER AND CONNECTION PLATE USING AN APPROVED ADHESIVE.

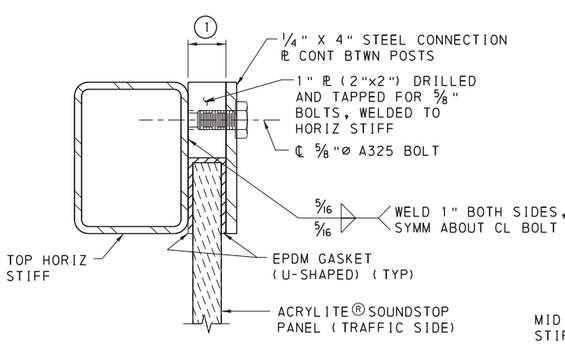

DETAIL H-1

1" 0 1" 2" 3" 4" 5"
6" = 1'-0"

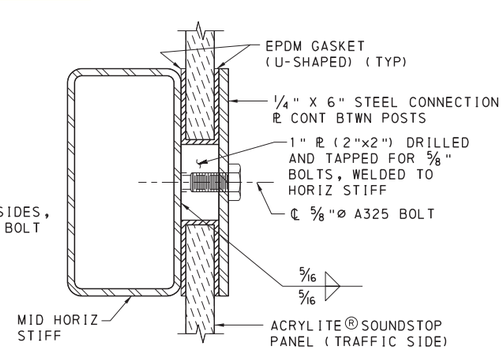

DETAIL H-2

1" 0 1" 2" 3" 4" 5"
6" = 1'-0"

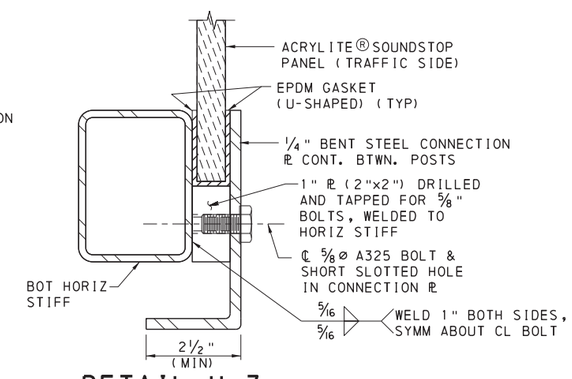

DETAIL H-3

1" 0 1" 2" 3" 4" 5"
6" = 1'-0"

Mark	Description	By	Chk'd	Recm'd	Date
△1	NOTE REVISIONS	RTS	JMB	TPM	4/10/15

REVISIONS

PADOT DRAWING #2012-050A PE, REV. 1

PENNSYLVANIA DEPARTMENT OF TRANSPORTATION RECOMMENDED

Thomas P Macioce

CHIEF BRIDGE ENGINEER

5/1/2014

COMMONWEALTH OF PENNSYLVANIA REGISTERED PROFESSIONAL ENGINEER RAY F. STAUFFER ENGINEER NO. 045914-E

APRIL 22, 2014

COMMONWEALTH OF PENNSYLVANIA
DEPARTMENT OF TRANSPORTATION
BUREAU OF PROJECT DELIVERY

STRUCTURE MOUNTED SOUND BARRIER SYSTEM
EVONIK CYRO LLC
ACRYLITE® SOUNDSTOP

STANDARD DETAILS

Gannett Fleming

SHT. 1 OF 3

DES: JMB | CKD: RTS | DWN: CJG | CKD: JMB

$USER2$
$DATE2$
$FILE2$

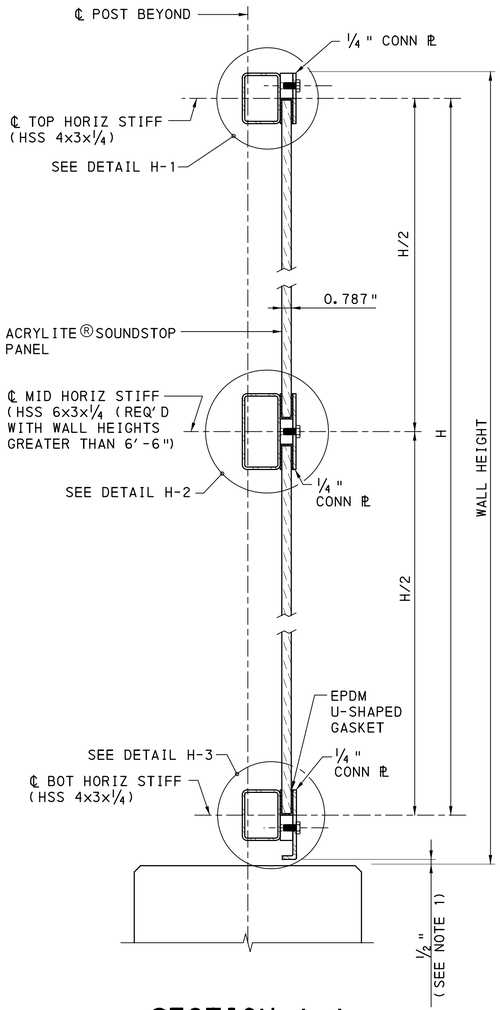

SECTION A-A

0 3" 6" 12" 18"
2" = 1'-0"

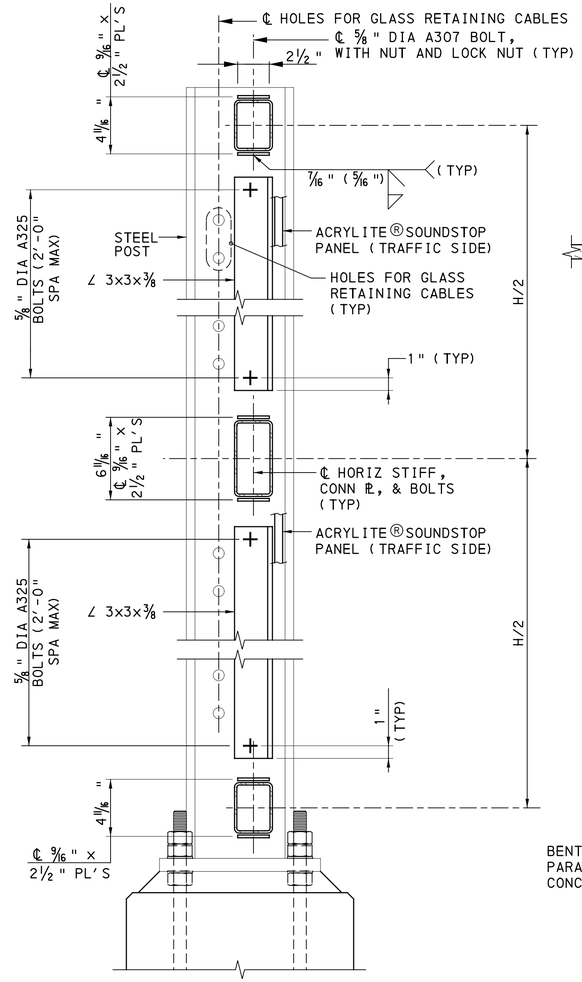

SECTION B-B

0 3" 6" 12" 18"
2" = 1'-0"

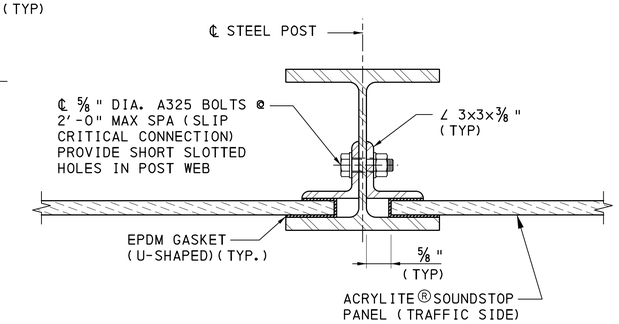

SECTION C-C

0 1" 3" 6" 1'
3" = 1'-0"

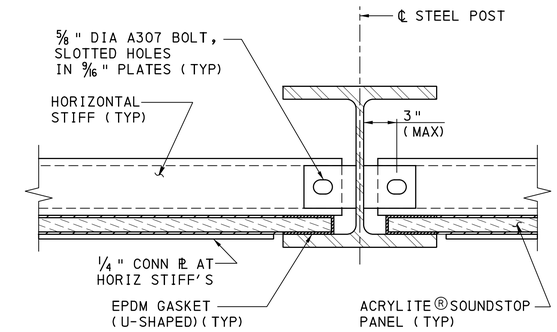

SECTION D-D

0 1" 3" 6" 1'
3" = 1'-0"

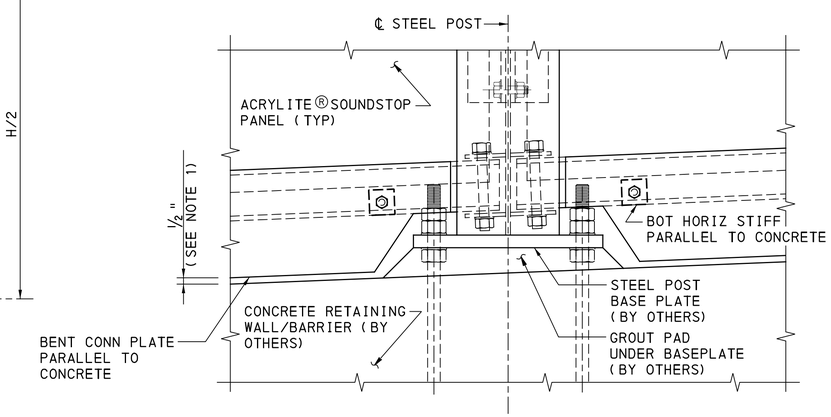

DETAIL E

0 3" 6" 12" 18"
2" = 1'-0"

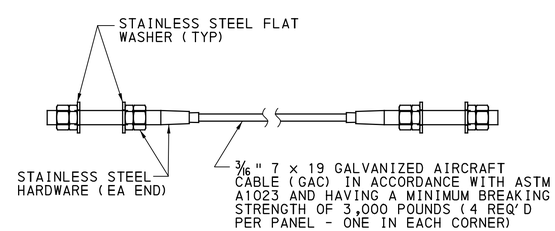

GLASS RETAINING CABLE DETAIL

NOT TO SCALE

NOTES:

1. USE CAULKING COMPOUND BETWEEN BOTTOM OF PANEL AND CONCRETE.

Mark	Description	By	Chk'd	Recm'd	Date
REVISIONS					

PADOT DRAWING #2012-050A PE

5/1/2014

COMMONWEALTH OF PENNSYLVANIA REGISTERED PROFESSIONAL ENGINEER NO. 045914-E RAY T. STUCKER

APRIL 22, 2014

COMMONWEALTH OF PENNSYLVANIA
DEPARTMENT OF TRANSPORTATION
BUREAU OF PROJECT DELIVERY

STRUCTURE MOUNTED SOUND BARRIER SYSTEM
EVONIK CYRO LLC
ACRYLITE® SOUNDSTOP

STANDARD DETAILS

Gannett Fleming

SHT. 2 OF 3

DES: JMB | CKD: RTS | DWN: CJG | CKD: JMB

USER: cgurmo
DATE: 4/22/2014 TIME: 12:31:31 PM
FILE: \\gfcph04s\cadd\223\CYRO-FRAME\PennDOT Structure Mounted_Phase 146and151\Phase 151\SBarrier_Evonik02_151.dgn

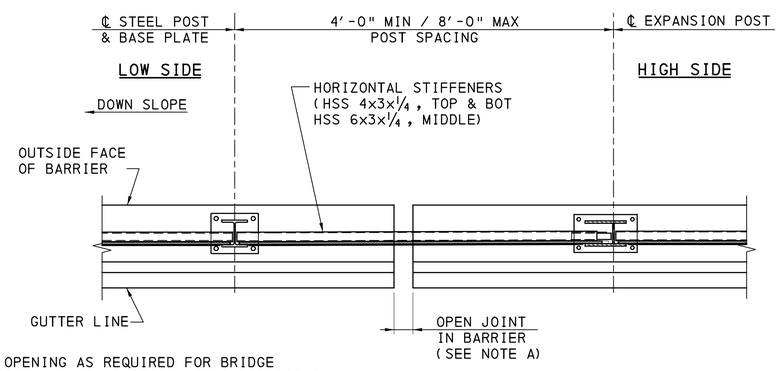

PLAN

NOTE A:

- JOINT OPENING AS REQUIRED FOR BRIDGE EXPANSION AND CONTRACTION AT 20 DEGREES C (68 DEGREES F).
- JOINT OPENING FOR SHOULDER OR PAVEMENT RELIEF JOINT = 1'-0" (REFER TO RC-20M AND RC-24M).
- SLIDING PLATE (BY OTHERS) NOT SHOWN.

LEGEND:

▲ - TOTAL MOVEMENT + 1/2" MIN

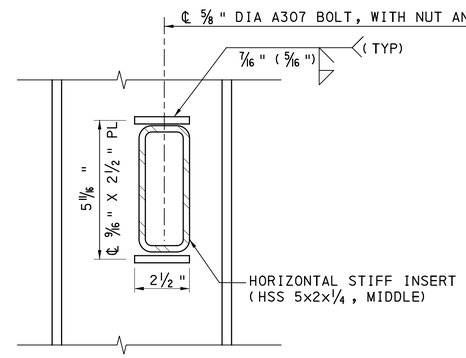

SECTION R-R

(MIDDLE HORIZ STIFF INSERT)
NOT TO SCALE

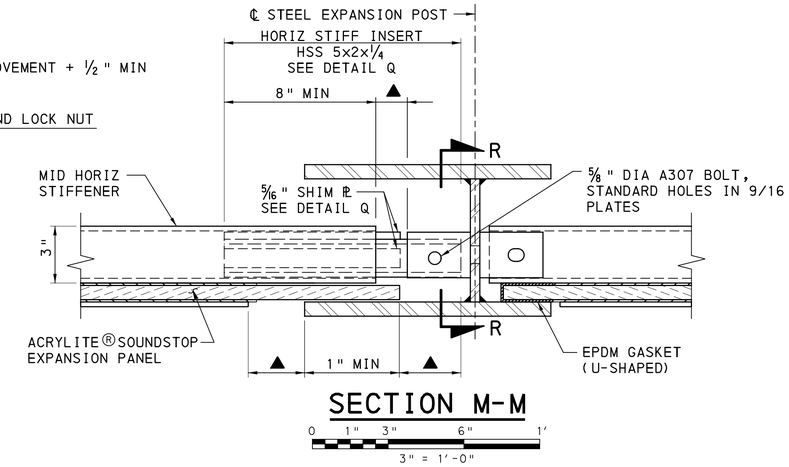

SECTION M-M

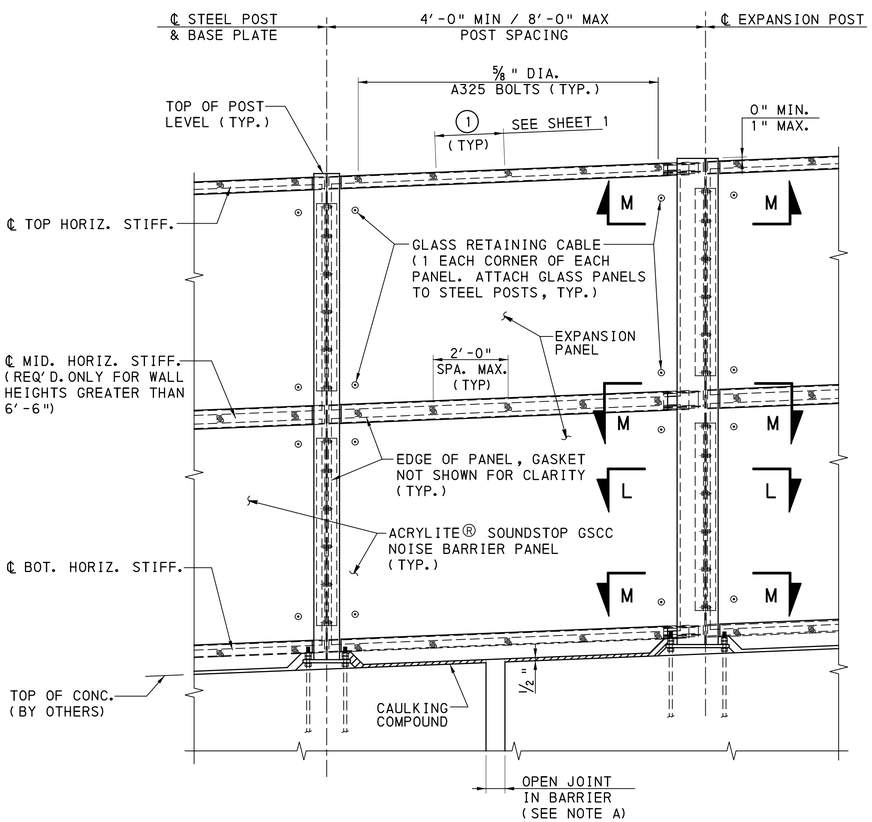

ELEVATION

EXPANSION PANEL DETAILS

1' 6" 0 1' 2' 3' 4' 5'
1/2" = 1'-0"

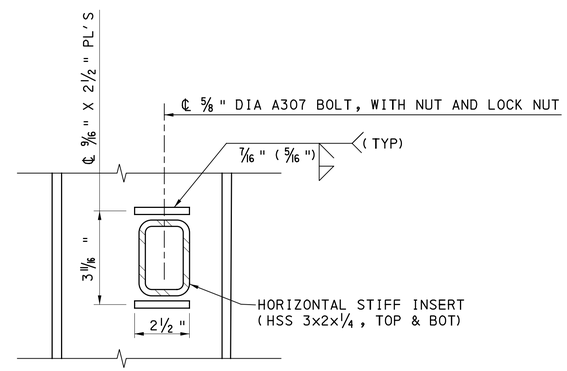

SECTION R-R

BOTTOM HORIZ STIFF INSERT (AS SHOWN)
TOP HORIZ STIFF INSERT (SIMILAR)
NOT TO SCALE

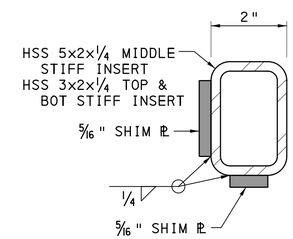

DETAIL Q

NOT TO SCALE

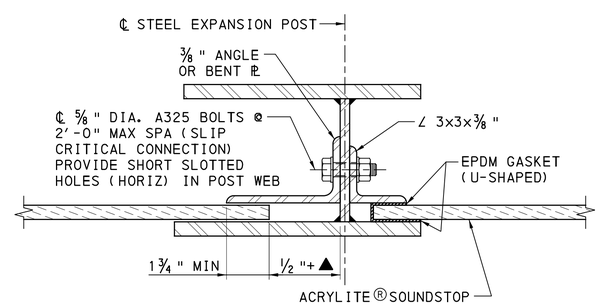

SECTION L-L

0 1" 3" 6" 1'
3" = 1'-0"

Mark	Description	By	Chk'd	Rec'd	Date

REVISIONS

PADOT DRAWING #2012-050A PE

5/1/2014

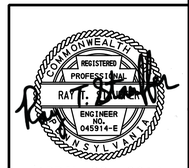

APRIL 22, 2014

COMMONWEALTH OF PENNSYLVANIA
DEPARTMENT OF TRANSPORTATION
BUREAU OF PROJECT DELIVERY

STRUCTURE MOUNTED SOUND BARRIER SYSTEM

EVONIK CYRO LLC
ACRYLITE® SOUNDSTOP

STANDARD DETAILS

Gannett Fleming

SHT. 3 OF 3

DES: JMB | CKD: RTS | DWN: CJG | CKD: JMB

USER: cgumno
DATE: 4/22/2014 TIME: 12:31:49 PM
FILE: \\gfcph04s\cadd\223\CYRO-FRAME\PennDOT Structure Mounted_Phase 146and151\Phase 151\SBarrier_Evonik03_151.dgn

Product:

Item 9000-7022 - Composite Arch Bridge System
Advanced Infrastructure Technologies LLC
PennDOT Drawing # 2013-236 REV. 1

Approval Date:	**Initiated By SOL:**
July 7, 2014	483-14-05
Revision 1 – March 20, 2020	483-20-01

Application/Use:

Composite Arch Bridge System manufactured by Advanced Infrastructure Technologies LLC, Orono, Maine has been approved to be used as an "Alternate" to bridge or culvert systems.

This Composite Arch Bridge System is covered under U.S. Patent Numbers 7,811,495, 8,522,486, and 8,591,788.

Composite Arch Bridge System is permitted for NHS systems. District Executives may permit the use of this Composite Arch Bridge System as an "Alternate" on a project-by-project basis.

Composite Arch Bridge System is limited to the following applications:

- Clear Span length: 20 feet to 65 feet
- Skew angle: 50 degrees to 90 degrees
- Structure configuration: Simple Span

The Composite Arch Bridge System is to be designed/analyzed to meet AASHTO 1st Edition, "LRFD Guide Specifications for Design of Concrete-filled FRP Tubes for Flexural and Axial Members". A Load Rating Table and Rating Procedure must be incorporated on the Contract Drawings. Contact Advanced Infrastructure Technologies, Orono, Maine for design and/or analysis questions.

Specifications:

Design/Material/Construction Specifications for this arch system are specified on PennDOT Drawing #2013-236 REV. 1 dated 3/20/2020 of Composite Arch Bridge System for your use.

Comment:

On those projects permitting the use of this system as an alternate, a special provision should be included in the proposal to indicate that the "Composite Arch Bridge System" as an alternate is allowed.

DESIGN SPECIFICATION FOR COMPOSITE ARCH BRIDGE SYSTEM

1.0 GENERAL

A. THIS WORK SHALL CONSIST OF PROCURING AND DESIGNING THE COMPOSITE ARCH BRIDGE SYSTEM IN ACCORDANCE WITH THESE SPECIFICATIONS AND IN CONFORMITY WITH THE LINES, GRADES, AND DIMENSIONS SHOWN ON THE CONTRACT DRAWINGS.

THE COMPOSITE ARCH BRIDGE SYSTEM IS SUPPLIED BY:

B. ADVANCED INFRASTRUCTURE TECHNOLOGIES (AIT), LLC

55 BAKER BLVD, SUITE 205, BREWER, MAINE 04412

PHONE: 207.573.9055

WWW.AITBRIDGES.COM

COMPOSITE ARCH BRIDGE SYSTEM WILL BE LIMITED TO SPANS NOT TO EXCEED 65'-0" WITH A SKEW LIMIT OF 50 DEGREES

C. THE BRIDGE SYSTEM SHALL BE DESIGNED BY AIT IN ACCORDANCE WITH PENNDOT DESIGN MANUAL PART 4 - STRUCTURES (DM-4), AASHTO LRFD BRIDGE DESIGN SPECIFICATIONS, AASHTO LRFD GUIDE SPECIFICATIONS FOR DESIGN OF CONCRETE-FILLED FRP TUBES FOR FLEXURAL AND AXIAL MEMBERS, AND OTHER APPLICABLE SPECIFICATIONS. THE COMPOSITE ARCH BRIDGE SHALL BE DESIGNED BY A LICENSED PROFESSIONAL ENGINEER. CALCULATIONS PACKAGES AND DRAWINGS SHALL BE PROVIDED TO THE CUSTOMER BY AIT FOR THE BRIDGE SYSTEM SUPPLIED. AS SUPPLIER, AIT WILL DELIVER TO THE JOBSITE ALL PARTS OF THE BRIDGE SYSTEM AS DETAILED IN THE CONTRACT DRAWINGS. EACH COMPONENT IS CUSTOM DESIGNED, DETAILED, AND FABRICATED FOR THE SPECIFIC BRIDGE PROJECT.

D. THE COMPOSITE ARCH BRIDGE SYSTEM IS A BURIED BRIDGE STRUCTURE CONSISTING OF TWO COMPONENTS:

1. ARCHES - THE ADVANCED FRP COMPOSITE TUBES DESIGNED, MANUFACTURED, AND DELIVERED BY AIT
2. DECKING PANELS - THE DECKING PANELS ARE CUSTOM DESIGNED, MANUFACTURED AND DELIVERED BY AIT

E. TERMS FOUND WITHIN THIS SPECIFICATION SHALL BE DEFINED AS FOLLOWS:

COMPOSITE ARCHES: A HOLLOW ADVANCED FRP TUBE STRUCTURAL MEMBER COMPRISED OF AN ADVANCED FIBER REINFORCED POLYMER SHELL WHICH FUNCTIONS AS EXTERNAL REINFORCEMENT AND STAY-IN-PLACE FORM FOR EXPANSIVE SELF- CONSOLIDATING CONCRETE.

2.0 COMPOSITE ARCHES

A. THIS WORK SHALL CONSIST OF DESIGNING THE COMPOSITE ARCH TUBES TO THE DIMENSIONS, DETAILS, AND QUANTITIES SHOWN ON THE PLANS AND ACCORDING TO THE REQUIREMENTS OF THESE SPECIFICATIONS

2.1 DESIGN

A. DESIGN LOADS ARE IN ACCORDANCE WITH PENNDOT DM-4 AND AASHTO LRFD BRIDGE DESIGN SPECIFICATIONS, PHL-93 LIVE LOADING. ARCH DESIGN IS IN ACCORDANCE WITH THE AASHTO LRFD GUIDE SPECIFICATIONS FOR DESIGN OF CONCRETE-FILLED FRP TUBES FOR FLEXURAL AND AXIAL MEMBERS, SUPPLEMENTED BY LABORATORY TESTING AS NECESSARY.

B. SECURE DISTRICT BRIDGE AND GEOTECHNICAL (SOILS) ENGINEERS' APPROVAL BEFORE INCORPORATING COMPOSITE ARCH BRIDGES IN ANY PROJECT.

C. PROVIDE AT NO EXPENSE TO THE DEPARTMENT FOUR SETS (THREE SETS TO DISTRICT AND ONE SET TO CENTRAL OFFICE BRIDGE DIVISION) OF CONSTRUCTION DRAWINGS (22" x 36") & CALCULATIONS. PROVIDE APPROVED DRAWINGS, USING DEPARTMENT DRAFTING STANDARDS. SHOW A PROFESSIONAL ENGINEER'S SEAL LICENSED IN PENNSYLVANIA, WITH A VALID SIGNATURE IN INK, THE DATE SIGNED, A BUSINESS NAME AND ADDRESS, ON THE FIRST SHEET OF THE DESIGN DRAWINGS, USE REPRODUCIBLE DRAWINGS FURNISHED BY THE DEPARTMENT. THE DISTRICT BRIDGE ENGINEER WILL SIGN THE FINAL DESIGN PLANS.

D. ON THE FIRST SHEETS OF THE COMPUTATIONS, SHOW A PROFESSIONAL ENGINEER'S SEAL (LICENSED IN PENNSYLVANIA), SIGNATURE AND THE DATE SIGNED. COMPOSITE ARCH BRIDGE SYSTEM PARAMETERS, AND OTHER LIMITATION ON FILL HEIGHTS ARE AS PER MANUFACTURER'S STANDARD DRAWINGS.

E. IN THE EVENT THAT CERTAIN DESIGN PARAMETERS, STRESSES OR SPECIFICATIONS ARE IN CONFLICT, THE FOLLOWING ORDER OF PREDOMINANCE GOVERNS:

1. DESIGN REQUIREMENTS LISTED IN "SPECIAL DRAWINGS AND SPECIAL DESIGN REQUIREMENTS" OF THE SPECIAL PROVISION.
2. DESIGN RELATED STRIKE OFF LETTERS IN EFFECT ON THE DATE OF PROJECT ADVERTISEMENT.
3. PENNDOT - DESIGN MANUAL PART 4 (STRUCTURES)
4. PENNDOT - DESIGN STANDARDS
5. AASHTO LRFD BRIDGE DESIGN SPECIFICATIONS (5TH EDITION), AASHTO LRFD GUIDE SPECIFICATIONS FOR DESIGN OF CONCRETE-FILLED FRP TUBES FOR FLEXURAL AND AXIAL MEMBERS

F. IN THE EVENT THAT A CLEAR ORDER OF PREDOMINANCE CANNOT BE ESTABLISHED OR DIFFERENCE IN THE INTERPRETATION OF THE DESIGN CANNOT BE SOLVED, THE CHIEF BRIDGE ENGINEER IS TO BE ARBITER AND HIS DECISION IS TO BE FINAL

G. DESIGN AND RATE THE ARCH SEGMENTS FOR PHL-93 AND P-82 LOADING, COMPLY WITH THE DESIGN CRITERIA IN DESIGN MANUAL PART 4M STRUCTURES, THE AASHTO LRFD BRIDGE DESIGN SPECIFICATIONS, AND AS SPECIFIED, SUBJECT TO EXCEPTIONS AND/OR ADDITIONS UNDER "SPECIAL DRAWINGS AND SPECIAL DESIGN REQUIREMENTS" (PART B)

H. PROVIDE DETAILS AND CALCULATIONS OF COMPOSITE ARCH END REACTIONS TO BE USED FOR FOUNDATION DESIGN (TO BE DESIGNED BY OTHERS)

I. DO NOT REDUCE THE ORIGINAL HORIZONTAL AND VERTICAL CLEARANCES AND/OR THE WATERWAY OPENING. DO NOT CHANGE THE ROADWAY GRADE AND/OR ALIGNMENT

J. PROVIDE A SUITABLE DRAINAGE PIPE ALONG THE CURB AND PARAPET THAT MEETS THE DEPARTMENT STANDARD SHAPE, SIZE AND REINFORCEMENT. ALL REINFORCEMENT BARS IN THE CURB AND PARAPET ARE TO BE EPOXY COATED.

K. PROVIDE MINIMUM COVER OF 1'-6" FROM TOP OF THE COMPOSITE ARCH UNIT CROWN TO TOP OF PAVEMENT.

L. MAXIMUM ALLOWABLE DIFFERENTIAL SETTLEMENT & LATERAL DEFLECTION OF THE FOUNDATION WILL BE CALCULATED ACCORDING TO AASHTO LRFD BRIDGE DESIGN SPECIFICAITONS 6TH EDITION EQUATION 12.8.4.1-1 SO THAT THE ARCH CAPACITY IS NOT DETRIMENTALLY AFFECTED.

$\Delta \leq 0.01\, S^2/R$ WHERE;
S = SPAN OF STRUCTURE BETWEEN SPRINGLINES (FT)
R = RISE OF STRUCTURE (FT)

M. PROVIDE A SUITABLE DRAINAGE PIPE AT REGULAR INTERVALS (NOT TO EXCEED 10'-0") ALONG THE ARCH TO RELEASE HYDROSTATIC PRESSURE. WHERE SIGNIFICANT SEEPAGE OR RELATIVELY RAPID ACCUMULATION OF WATER IS ANTICIPATED BEHIND THE WALL, INCORPORATE DRAINAGE PIPE AS SPECIFIED, INTO THE 2'-0" MINIMUM WIDTH OF SELECT BACKFILL, WRAP WITH GEOTEXTILE FABRIC, BEHIND THE WALL TO IMPROVE DRAINAGE CONDITIONS, DIRECT SEEPAGE FROM DRAINAGE PIPE TO WEEP HOLES ALONG THE EXTERIOR FACE OF THE WALL OR TO THE STORM WATER CONVEYANCES.

N. PROVIDE PRECAST OR CAST-IN-PLACE MOMENT SLAB BARRIERS PER BC-799M.

3.0 FRP DECK PANELS

A. THIS WORK SHALL CONSIST OF DESIGNING THE FRP DECK PANELS, FASTENERS, AND ADHESIVE FOR THE COMPOSITE ARCH BRIDGE SYSTEM IN ACCORDANCE WITH THE CONTRACT DRAWINGS AND THESE SPECIFICATIONS.

3.1 DESIGN

A. THE CUSTOM PANELS ARE DESIGNED AND SUPPLIED BY AIT IN ACCORDANCE WITH THE AASHTO LRFD BRIDGE DESIGN SPECIFICATIONS AND THE ASCE PRE-STANDARD FOR LRFD OF PULTRUDED FRP STRUCTURES TO CARRY THE REQUIRED LOADING.

4.0 HEADWALLS

A. THIS WORK SHALL CONSIST OF PROCURING AND DESIGNING THE HEADWALL PANELS TO THE DIMENSIONS, DETAILS, AND QUANTITIES SHOWN ON THE PLANS AND ACCORDING TO THE REQUIREMENTS OF THESE SPECIFICATIONS.

4.1 DESIGN

A. FOR STANDARD PANELS USE THE PENNDOT APPROVED BRIDGE AND STRUCTURES PRODUCT NUMBERS 8,29E, AND/OR 34E.

B. CUSTOM ARCH PANELS ARE DESIGNED PER PROJECT BY AIT IN ACCORDANCE WITH DM-4 AND AASHTO LRFD BRIDGE DESIGN SPECIFICATIONS.

1. SUBMIT CUSTOM PANEL DESIGN SHOP DRAWINGS FOR ACCEPTANCE BY THE DISTRICT BRIDGE ENGINEER.

Bridge Load Ratings

ADDT (at the Time of Design)

Cumulative ADDT (at the Time of Rehabilitation)

Span No.		Arch Span, Rise, Cover, Spacing, and Diameter					
		H 20	HS 20	ML-80	TK-527	PHL-93	P-82
Inventory Rating (IR)	Distribution Factor						
	Location						
	Limit State						
	Rating Factor						
Operating Rating (OR)	Distribution Factor						
	Location						
	Limit State						
	Rating Factor						

PER DESIGN

INDEX OF SHEETS **NO**

GENERAL/DESIGN NOTES	1
CONSTRUCTION NOTES	2
ARCH PLAN AND ELEVATIONS	3
ARCH DETAILS	4
DECKING DETAILS	5
FASCIA PLATE LAYOUT	6
HEADWALL AND DRAINAGE DETAIL	7

3/20/2020

PENNSYLVANIA
DEPARTMENT OF TRANSPORTATION
RECOMMENDED
Thomas P Macioce
CHIEF BRIDGE ENGINEER

PENNDOT DRAWING 2013-236 REV. 1

MARK	DESCRIPTION	BY	CHK'D	RECM'D	DATE

REVISIONS

THIS DRAWING IS THE PROPERTY OF "ADVANCED INFRASTRUCTURE TECHNOLOGIES, LLC" (AIT), IT IS MADE FOR THE EXCLUSIVE USE OF "AIT". NEITHER THE DRAWING OR REPRODUCTION OF IT NOR INFORMATION DERIVED FROM IT IS TO BE GIVEN TO OTHERS WITHOUT THE EXPRESSED CONSENT OF "AIT". NO USE IS TO BE MADE OF IT WHICH IS OR MAY BE IN ANY WAY INJURIOUS TO AND/OR CONTRARY TO THE INTERESTS OF "AIT". "AIT" MAKES NO REPRESENTATION OR WARRANTIES AS TO ANY USE OF THIS DRAWING OTHER THAN THAT OF WHICH "AIT" ORIGINALLY INTENDED. THIS COMPOSITE ARCH BRIDGE SYSTEM IS COVERED UNDER U.S. PATENT NUMBERS 7,811,495; 8,522,486; 8,591,788; 8,850,750; AND 8,935,888

"I HEREBY CERTIFY THAT ALL DESIGN ASSUMPTIONS HAVE BEEN VALIDATED EITHER THROUGH CONSTRUCTION DETAILS OR NOTES ON THESE DRAWINGS OR THROUGH THE CONTRACT PLANS AND PROVISIONS."

COMMONWEALTH OF PENNSYLVANIA
REGISTERED PROFESSIONAL
ZEYN B. UZMAN
ENGINEER
NO. 54120

PREPARED BY:
AIT BRIDGES
55 BAKER BLVD, 205
BREWER, ME 04412

ENGINEER

3/18/2020
DATE

AIT BRIDGES
A Division of Advanced Infrastructure Technologies

55 BAKER BLVD, SUITE 205
BREWER, ME 04412
Tel 207.573.9055
www.aitbridges.com

PROJECT: Sample JN: YR-XXX (EG. 13020)

LOCATION: Sample

DRAWING STATUS: Sample

Correct scale on size B paper (11x17 Ledger)

TITLE: COMPOSITE ARCH BRIDGE SYSTEM
GENERAL/DESIGN NOTES

	INITIALS	DATE
DRAWN BY:	TAK	2-20-2020
DESIGNED BY:	ZBU	2-20-2020
CHECKED BY:	KLS	2-28-2020

SHEET NUMBER:

MATERIAL NOTES:

1. ALL SELECT GRANULAR BACKFILL MATERIAL USED IN THE STRUCTURE VOLUME SHALL BE FREE FROM ORGANIC OR OTHERWISE DELETERIOUS MATERIAL AND SHALL CONFORM TO THE FOLLOWING GRADATION LIMITS AS DETERMINED BY AASHTO T-27:

SIEVE SIZE	PERCENT PASSING
3"	100%
¾"	20-100%
No. 40	0-60%
No. 200	0-10%

FURNISH MATERIALS MEETING THE QUALITY REQUIREMENTS OF TYPE C COARSE AGGREGATE OR BETTER AS SPECIFIED IN SECTION 703.2(A), TABLE B, EXCEPT FURNISH MATERIALS FREE OF CLAY LUMPS, FRIABLE PARTICLES, COAL AND COKE. DO NOT USE METALLURGICAL SLAG OR CINDERS.

FURNISH MATERIALS WITH A MAXIMUM PLASTICITY INDEX (PI) OF 3 AS DETERMINED IN ACCORDACE WITH AASHTO T89 AND T90. FURNISH MATERIAL EXHIBITING AN ANGLE OF INTERNAL FRICTION OF NOT LESS THAN 34 DEGREES AS DETERMINED IN ACCORDANCE WITH AASHTO T236, ON THE PORTION FINER THAN THE 2.0 MM (No. 10) SIEVE COMPACTED TO 95% OF PTM No. 106. METHOD B. AT OPTIMUM MOISTURE CONTENT, EXCEPT FOR COARSE AGGREGATE MEETING THE REQUIREMENTS OF SECTION 703.2 DIRECT SHEAR TESTING MAY BE PERFORMED ON SAMPLES CONTAINING MATERIAL LARGER THAN THE 2.0 MM (No. 10) SIEVE, IF THE SHEAR DEVICE CONFORMS WITH AASHTO T236, SECTIONS 5.4 AND 5.5

ADDITIONALLY, ALL SELECT GRANULAR BACKFILL MATERIAL SHALL EXHIBIT THE FOLLOWING PROPERTIES:

PH RANGE BETWEEN 6.0 AND 10.0

RESISTIVITY GREATER THAN 5000 OHM-CM - NO CHLORIDE OR SULFATE TESTING IS REQURED

RESISTIVITY BETWEEN 2000 AND 5000 OHM-CM - PERFORM SPECIFIED CHLORIDE AND SULFATE TESTS

CHLORIDES LESS THAN 100 PPM: AND

SULFATES LESS THAN 200 PPM

2. ALL STRUCTURAL FASTENERS SHALL CONFORM TO ASTM F593
3. ALL STRUCTURAL STEEL SHALL BE 304 STAINLESS STEEL
4. ALL BLIND RIVETS SHALL CONFORM TO ASTM A307
5. ALL WASHERS SHALL CONFORM TO ASTM F436
6. ALL SCREWS SHALL BE 410 STAINLESS STEEL
7. ALL E-GLASS SHALL CONFORM TO ASTM D578-98
8. ALL REINFORCEMENT STEEL SHALL CONFORM TO SECTION 709.1 OF PUBLICATION 408 AND IS DETAILED PER DESIGN
9. ALL PLIOGRIP 7770 ADHESIVE SHALL CONFORM TO ASTM D638
10. ARCH MATERIALS SHALL CONFORM TO SECTION 3: MATERIAL SPECIFICATIONS OF AASHTO LRFD GUIDE SPECIFICATIONS FOR DESIGN OF CONCRETE-FILLED FRP TUBES FOR FLEXURAL AND AXIAL MEMBERS
11. ALL DECKING SHALL CONFORM TO THE ASCE PRE-STANDARD FOR LRFD OF PULTRUDED FRP STRUCTURES
12. THE FOLLOWING MIX DESIGN IS RECOMMENDED FOR THE EXPANSIVE SELF-CONSOLIDATING CONCRETE USED TO FILL THE ARCH TUBES:
    - 12.1. 28 DAY COMPRESSIVE STRENGTH = 6,000 PSI
    - 12.2. MAX COARSE AGGREGATE SIZE = ⅜"
    - 12.3. MINIMUM CEMENTITIOUS MATERIAL = 850 LB/CY
    - 12.4. USE OF A HIGH RANGE WATER REDUCER AND VISCOSITY MODIFYING ADMIXTURE PER MANUFACTURES RECOMMENDATION
    - 12.5. USE OF A HYDRATION STABILIZER
    - 12.6. FINE AGGREGATE NOT LESS THAN 50% OF THE TOTAL AGGREGATE VOLUME
    - 12.7. THE MIX MUST CONTAIN A TYPE K EXPANSIVE CEMENT AT A RATE OF 15% BY WEIGHT OF TOTAL CEMETITIOUS MATERIAL
    - 12.8. MIX MAY INCLUDE FLY ASH AT A RATE LESS THAN 25% BY WEIGHT OF CEMENTITIOUS MATERIAL OR GRADE 100 OR 120 GROUND GRANULATED BLAST FURNACE SLAG AT A RATE LESS THAN 50% BY WEIGHT OF CEMENTITIOUS MATERIAL
    - 12.9. THE WATER CEMENT RATIO SHALL BE BETWEEN 0.42 AND 0.45
    - 12.10. AIR CONTENT SHALL BE BETWEEN 0% AND 5.0%
    - 12.11. SLUMP FLOW SHALL BE BETWEEN 24" AND 30"
    - 12.12. VISUAL STABILITY INDEX SHALL BE BETWEEN 0 AND 1

SUGGESTED CONSTRUCTION SEQUENCE:

1. FORM FOUNDATIONS AND PLACE REBAR
2. INSERT END REINFORCEMENT CAGES INTO ARCH ENDS AND INSTALL ARCHES IN FOOTINGS
3. ATTACH DECKING TO ARCHES
4. POUR FOUNDATIONS
5. DRILL 3" HOLE AT APEX OF ARCH AND FILL ARCHES WITH SELF-CONSOLIDATING CONCRETE. CONSTRUCT IN ACCORDANCE WITH PUB 408 714.7(a)2 AND SECTION 1001 FOR GUIDANCE OF FIELD USE. ACHEIVE 3000 PSI STRENGTH IN FIELD CYLINDER TEST BEFORE BACKFILLING
6. ERECT HEADWALLS
7. BACKFILL STRUCTURE AND PLACE SOIL REINFORCEMENT LAYERS PER RC-12M. BACKFILL ARCH IN MAXIMUM 1'-0" LOOSE LIFTS, ALTERNATING LIFTS ON EACH SIDE OF THE ARCH TO MAINTAIN BALANCED LOADING. THE MAXIMUM DEVIATION FROM EQUAL BACKFILLING WILL BE 2'-0". ACHIEVE THE BACKFILL COMPACTION WITHIN THE 4'-0" ON EACH SIDE OF ARCH UNIT AND OVER THE TOP OF THE ARCH UNIT UNTIL IT IS COVERED TO A MINIMUM DEPTH OF 12" BY USING AT LEAST THREE PASSES WITH LIGHT MECHANICAL TAMPERS, ROLLERS OR VIBRATORY SYSTEM. ACCOMPLISH BACKFILL COMPACTION WITHOUT DISTURBANCE OR DISTORTION OF THE ARCH COMPONENTS
8. INSTALL FASCIA PLATES

ARCH FILLING NOTES:

1. SELF-CONSOLIDATING CONCRETE MAY BE PLACED BY PUMP OR WITH A CONCRETE BUCKET AND FUNNEL.
2. EACH ARCH WILL TAKE AN ESTIMATED "X" CUBIC YARDS OF CONCRETE
3. NO CONCRETE SHOULD BE PLACED IN THE ARCH IF IT DOES NOT MEET THE SLUMP FLOW REQUIREMENTS OF 24" - 30" SPREAD.
4. DRILL THE 3" FILL HOLE THROUGH THE ARCH AT THE APEX. DRILL A ¾" HOLE IN THE ADJACENT CORRUGATION FOR AIR VENTING.
5. ARCHES CAN BE INSPECTED FOR VOIDS AFTER FILLING BY TAPPING THE ARCH AND LISTENING FOR A HOLLOW SOUND. REPAIR IN ACCORDANCE WITH THE SPECIFICATIONS.

MANUFACTURING AND CONSTRUCTION TOLERANCES AND INSPECTION DETIALS:

1. EACH ARCH WILL BE MEASURED TO CONFORM TO THE DIMENSIONAL TOLERANCES SPECIFIED. DIMENSIONS OUTSIDE THE FOLLOWING LIMITS WILL BE SUBJECT TO REJECTION OR REPAIR:
    - 1.1. THE SHAPE OF THE ARCH SHALL NOT VARY FROM THE SHOP DRAWINGS BY MORE THAN 1.5" AT ANY LOCATION
    - 1.2. THE SPAN AND RISE OF THE ARCH SHALL CONFORM TO THE DESIGN AND SHOP DRAWINGS TO WITHIN ±0.5% OF THE GIVEN DIMENSION
    - 1.3. DIAMETER OF ALL SECTIONS OF THE ARCH SHALL CONFORM TO THE DESIGN AND SHOP DRAWINGS TO WITHIN ±2% AS MEASURED WITH A PI TAPE
2. PRIOR TO ACCEPTANCE EACH ARCH WILL BE VISUALLY INSPECTED FOR DEFECTS. THE PRESENCE OF ONE OR MORE OF THE FOLLOWING DEFECTS WILL BE CAUSE FOR REJECTION:
    - 2.1. VOIDS RESULTING FROM DECOMPRESSION OF THE TOOLING
    - 2.2. VOIDS RESULTING FROM INFUSED AIR (E.G. CAUSED BY UNCLAMPED HOSE, DRY RESIN BUCKET, ETC.)
    - 2.3. VOIDS CAUSED BY BAG LEAKS WHICH LEAVE TRACES OF AIR IN THE INFUSED PART
    - 2.4. UNREPAIRED DRY SPOTS LARGER THAN ⅛" DIAMETER
3. COMPOSITE DECK SECTION SHALL CONFORM TO CREATIVE PULTRUSIONS' DESIGN GUIDE CHAPTER 8: QUALITY ASSURANCE AND STANDARD TOLERANCES

HEADWALL ARCH CONNECTION NOTES:

1. PLACE NON-SHRINK GROUT ALONG OUTER EDGE AS DETAILED PER DESIGN WITH A MINIMUM OF 4" BEYOND THE INSIDE FACE OF THE HEADWALL PANEL AND SLOPED OFF AT A 1:1
2. ERECT HEADWALL PANELS AND PLACE DRAINAGE
3. ERECT PRECAST CONCRETE FASCIA PLATE. ANCHOR TO ARCH AS DETAILED PER DESIGN
4. SEAL BETWEEN THE TOP EDGE OF FASCIA PLATE AND THE HEADWALL PANEL ALONG THE ENTIRE ARC LENGTH OF THE ARCH WITH AN APPROVED SEALANT PER SECTION 705.4(a) OF PUB 408

SPLICE INSTALLATION NOTES:

NOTE: FOR SPLICED ARCHES ONLY

1. CLEAR A LEVEL AREA TO SPLICE THE ARCHES PRIOR TO ERECTION
2. TAKING TWO ARCH HALVES, SPLICE REINFORCEMENT, AND ONE SPLICE COLLAR, FIT THE SPLICE REINFORCEMENT AND TWO HALVES INSIDE THE SPLICE COLLAR AND VERIFY EXTERNAL ARCH GEOMETRY
3. DRILL AND PLACE BLIND RIVET FASTENERS PER DESIGN
4. ERECT ARCH INTO FINAL POSITION AND CONTINUE TO ITEM 2 OF SUGGESTED CONSTRUCTION SEQUENCE

SHEAR BOLT INSTALLATION NOTES:

NOTE: FOR SKEWED BRIDGES ONLY

1. PLACE ARCHES AND DECKING
2. DRILL PLACEMENT HOLES FOR EACH SHEAR BOLT SPACED PER DESIGN (NOTE: PLACEMENT HOLES SHOULD BE THE SAME DIAMETER AS THE SHEAR BOLT TO ENSURE A TIGHT FIT)
3. PRIOR TO FILLING THE ARCH WITH SELF-CONSOLIDATING CONCRETE, INSTALL SHEAR BOLTS

7/7/14

3/20/2020 PENNDOT DRAWING 2013-236 REV. 1

AIT BRIDGES
A Division of Advanced Infrastructure Technologies

55 BAKER BLVD, SUITE 205
BREWER, ME 04412
Tel 207.573.9055
www.aitbridges.com

PROJECT: Sample	JN: YR-XXX (EG. 13020)	TITLE: COMPOSITE ARCH BRIDGE SYSTEM CONSTRUCTION NOTES	SHEET NUMBER: 2 OF 7
LOCATION: Sample		INITIALS / DATE	
DRAWING STATUS: Sample		DRAWN BY: TAK 2-20-2020	
		DESIGNED BY: ZBU 2-20-2020	
Correct scale on size B paper (11x17 Ledger)		CHECKED BY: KLS 2-28-2020	

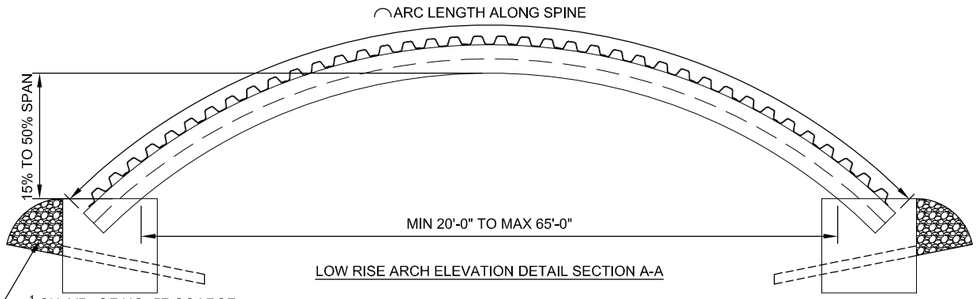

LOW RISE ARCH ELEVATION DETAIL SECTION A-A

½ CU. YD. OF NO. 57 COARSE AGGREGATE AT EACH WEEP HOLE ENCASED IN GEOTEXTILE, CLASS 1, SEE PUB. 408 SECTION 1001.3(c) & (d) AND DETAILS ON SHEET 6 OF BC-751M

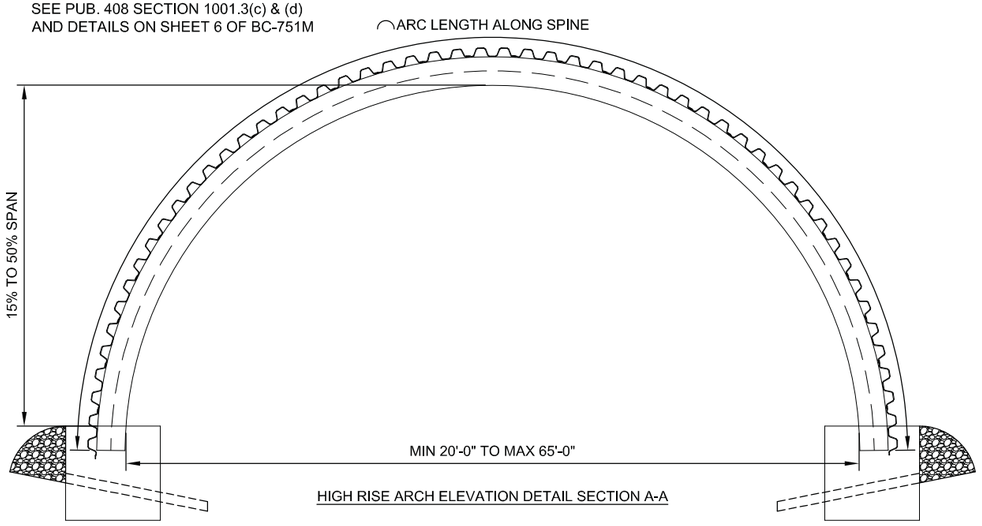

HIGH RISE ARCH ELEVATION DETAIL SECTION A-A

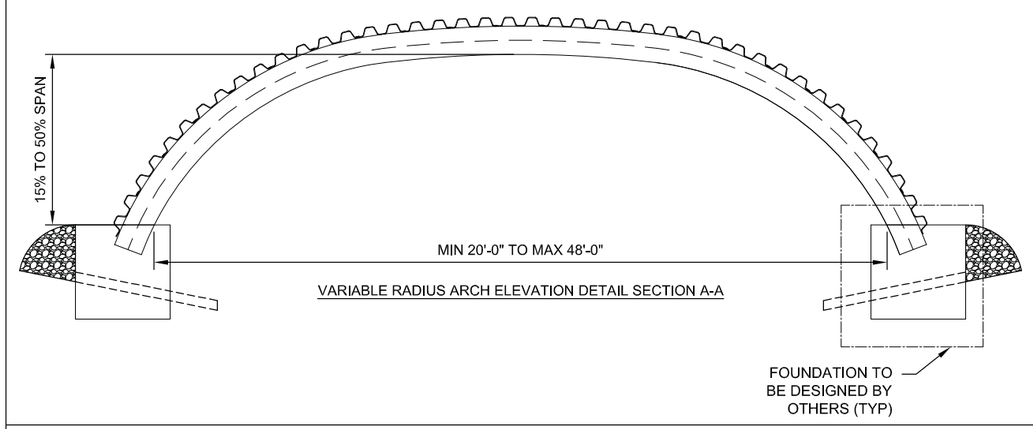

VARIABLE RADIUS ARCH ELEVATION DETAIL SECTION A-A

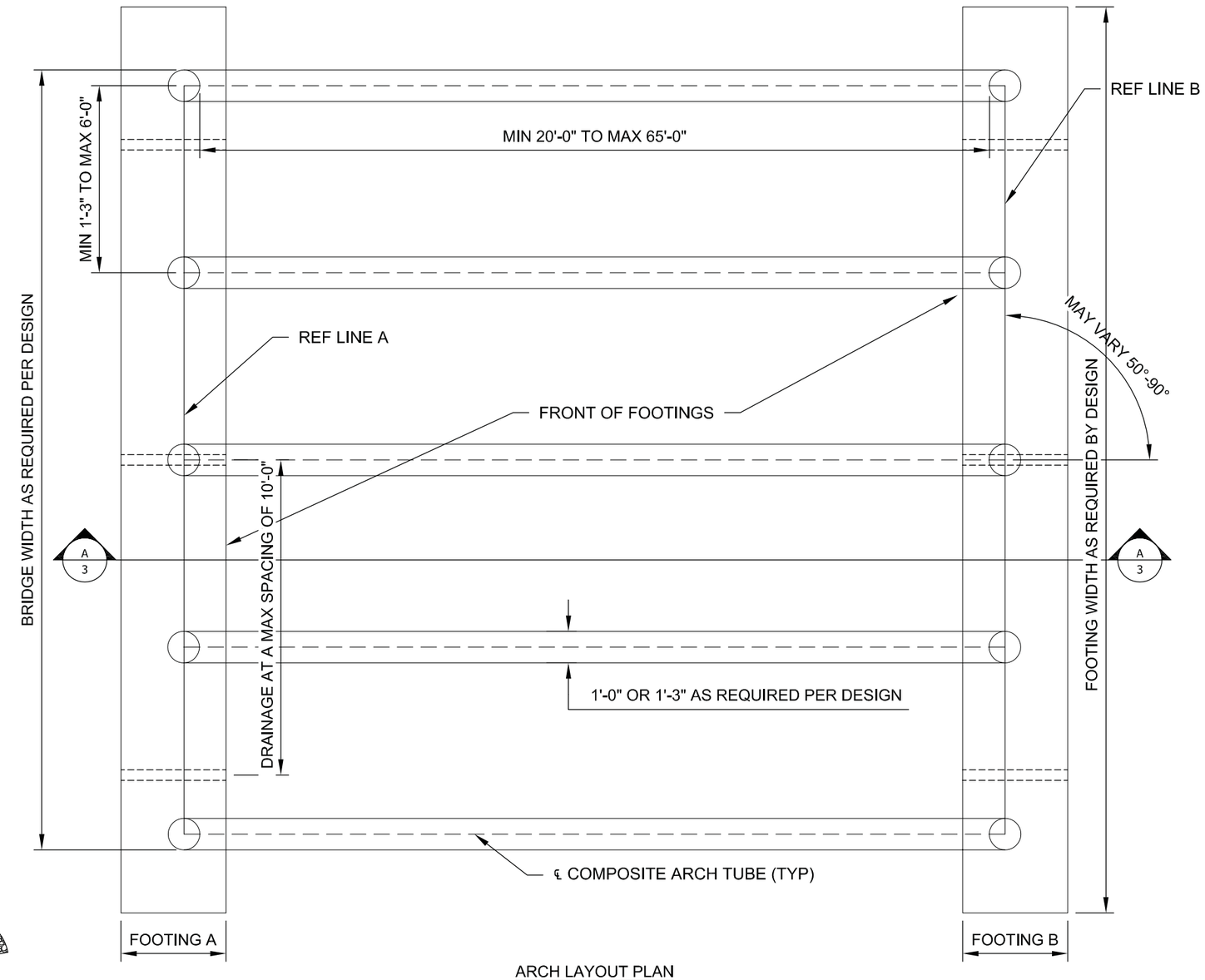

ARCH LAYOUT PLAN

7/7/14

3/20/2020 PENNDOT DRAWING 2013-236 REV. 1

AIT BRIDGES
A Division of Advanced Infrastructure Technologies

55 BAKER BLVD, SUITE 205
BREWER, ME 04412
Tel 207.573.9055
www.aitbridges.com

PROJECT: Sample JN: YR-XXX (EG. 13020)	TITLE: COMPOSITE ARCH BRIDGE SYSTEM ARCH PLAN AND ELEVATIONS		SHEET NUMBER:
LOCATION: Sample	INITIALS	DATE	3 OF 7
DRAWING STATUS: Sample	DRAWN BY: TAK	2-20-2020	
	DESIGNED BY: ZBU	2-20-2020	
Correct scale on size B paper (11x17 Ledger)	CHECKED BY: KLS	2-28-2020	

FINISHING NOTES:

1. ARCH MATERIALS SHALL CONFORM TO SECTION 3: MATERIAL SPECIFICATIONS OF AASHTO LRFD GUIDE SPECIFICATIONS FOR DESIGN OF CONCRETE-FILLED FRP TUBES FOR FLEXURAL AND AXIAL MEMBERS

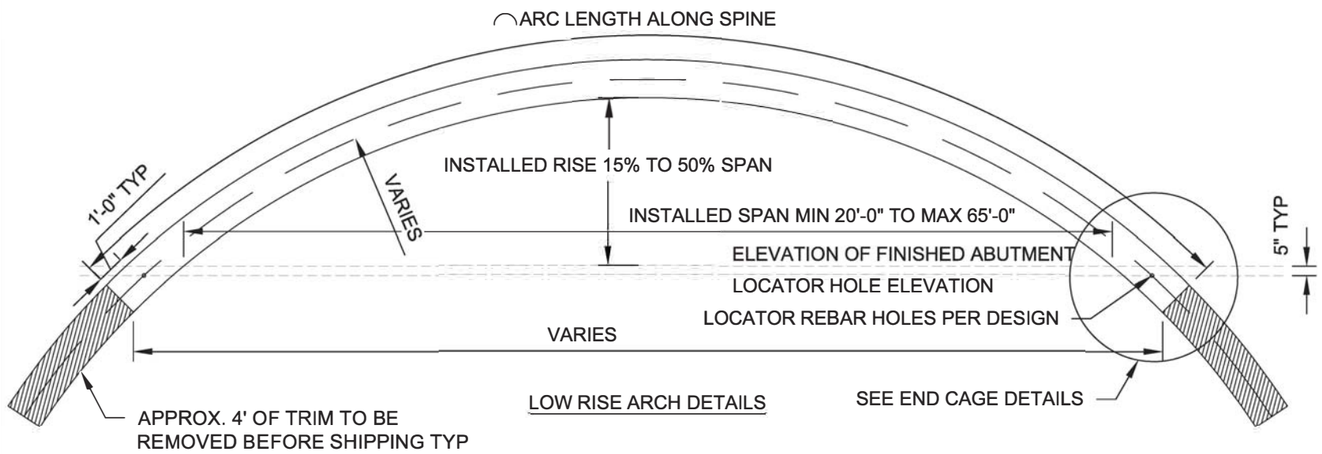

LOW RISE ARCH DETAILS

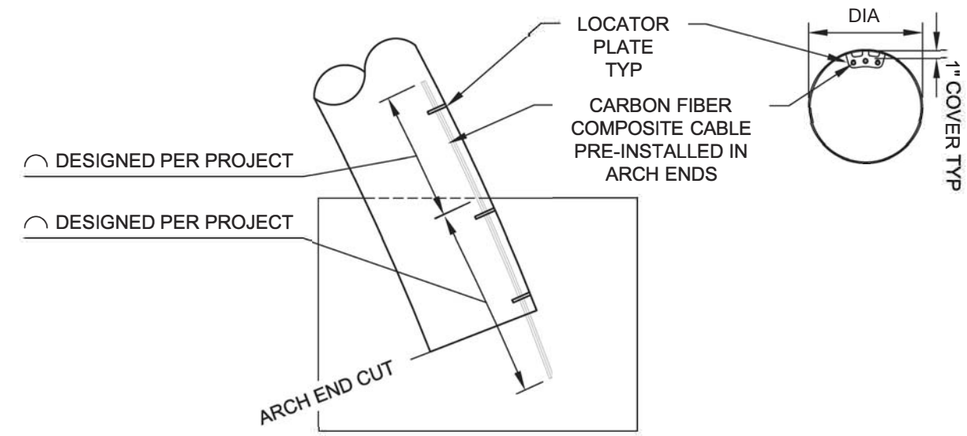

CFCC END CAGE DETAILS

NOTE: PLACEMENT DEPENDS ON ARCH END MOMENT CFCC ALWAYS PLACED ON TENSION FACE
EMBEDMENT LENGTH AND QUANTITY IS DESIGNED PER PROJECT

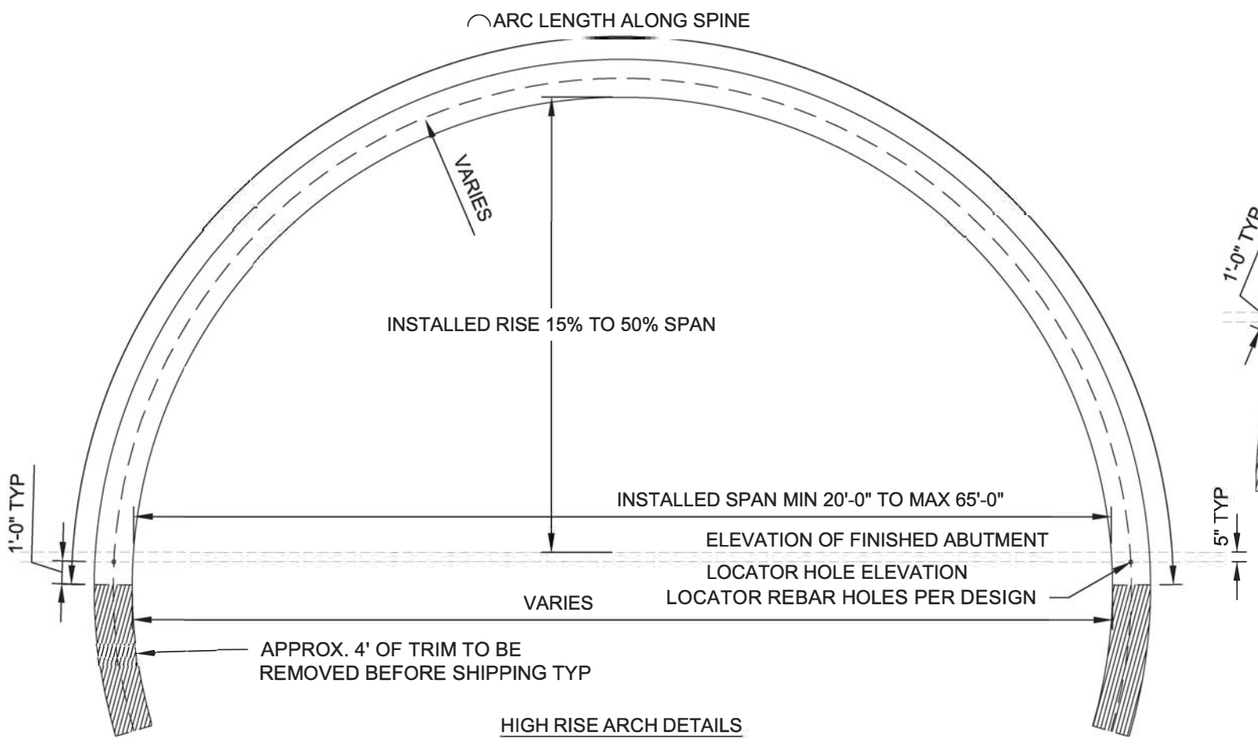

HIGH RISE ARCH DETAILS

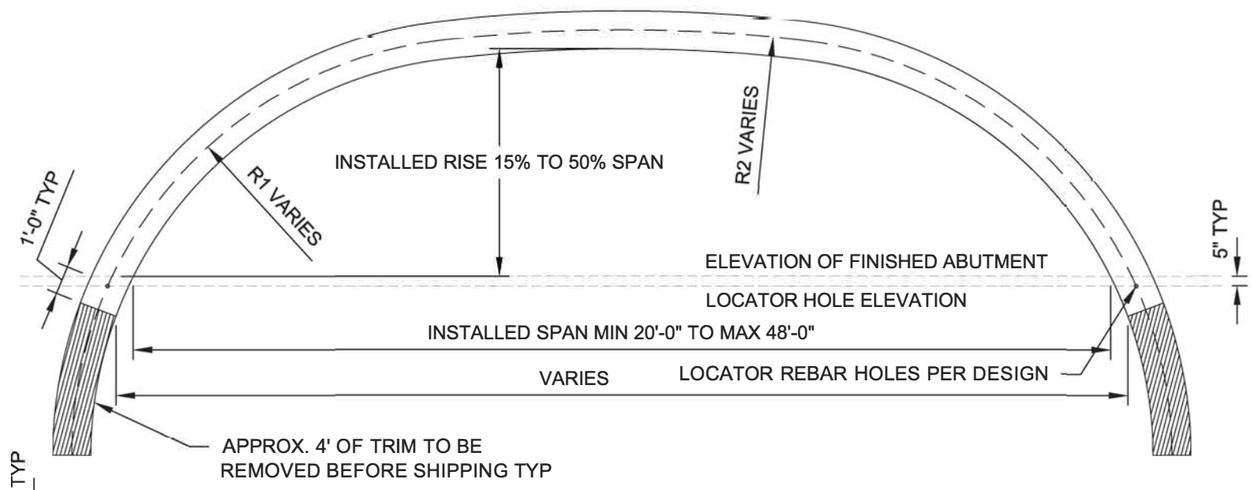

VARIABLE RADIUS ARCH DETAILS

7/7/14

3/20/2020 PENNDOT DRAWING 2013-236 REV. 1

AIT BRIDGES
A Division of Advanced Infrastructure Technologies

55 BAKER BLVD, SUITE 205
BREWER, ME 04412
Tel 207.573.9055
www.aitbridges.com

PROJECT: Sample JN: YR-XXX (EG. 13020)	TITLE: COMPOSITE ARCH BRIDGE SYSTEM ARCH DETIALS		SHEET NUMBER:
LOCATION: Sample		INITIALS / DATE	4 OF 7
DRAWING STATUS: Sample	DRAWN BY:	TAK / 2-20-2020	
	DESIGNED BY:	ZBU / 2-20-2020	
Correct scale on size B paper (11x17 Ledger)	CHECKED BY:	KLS / 2-28-2020	

DECK NOTES:

- PROJECT TO INCLUDE "X" TOTAL DECK PANELS WITH DIMENSIONS 3.75" X 19.5" X "DECK WIDTH"
- BRIDGE WIDTH TO BE SPANNED BY "X" PANEL(S)

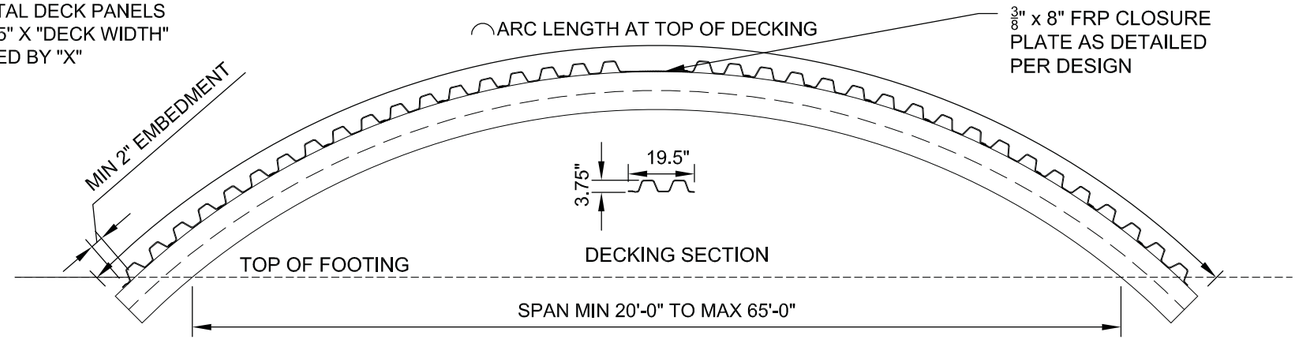

ARCH SECTIONS

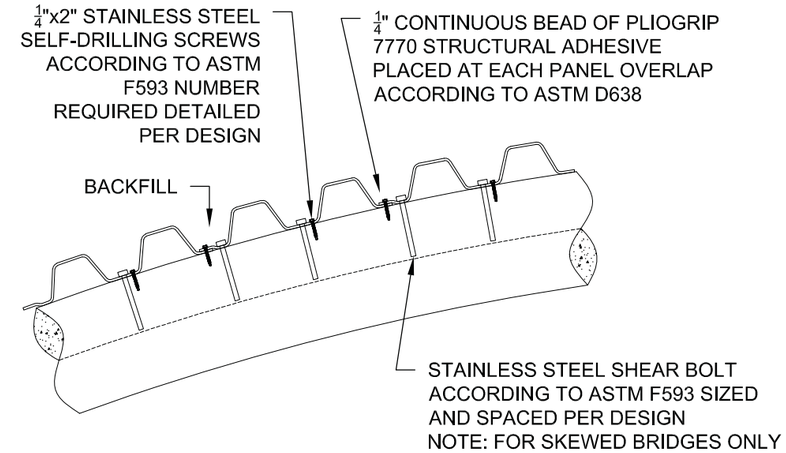

DECK CONNECTION DETAIL

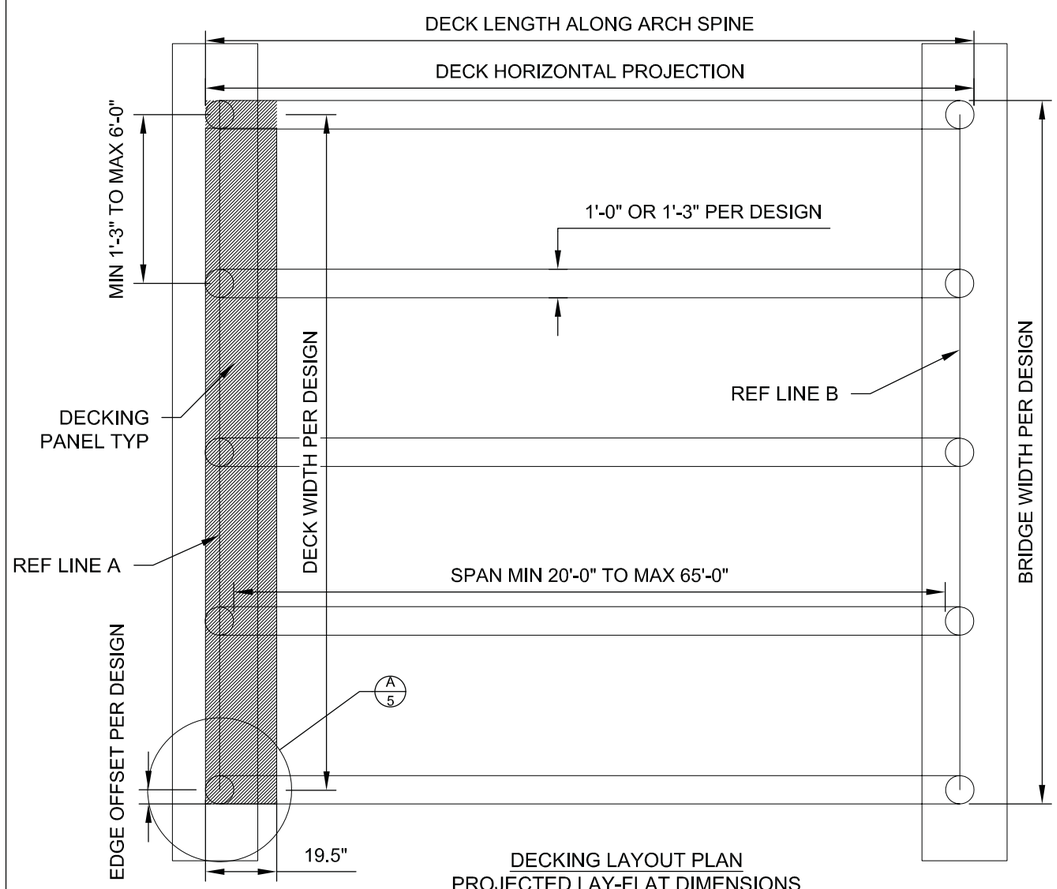

DECKING LAYOUT PLAN
PROJECTED LAY-FLAT DIMENSIONS

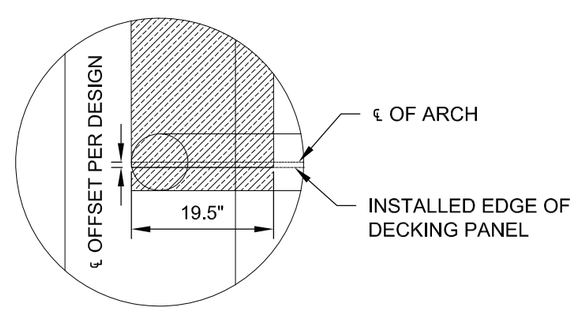

DECKING DETAIL A

7/7/14

3/20/2020 PENNDOT DRAWING 2013-236 REV. 1

AIT BRIDGES
A Division of Advanced Infrastructure Technologies

55 BAKER BLVD, SUITE 205
BREWER, ME 04412
Tel 207.573.9055
www.aitbridges.com

PROJECT: Sample JN: YR-XXX (EG. 13020)	TITLE: COMPOSITE ARCH BRIDGE SYSTEM DECKING DETAILS			SHEET NUMBER:
LOCATION: Sample		INITIALS	DATE	5 OF 7
DRAWING STATUS: Sample	DRAWN BY:	TAK	2-20-2020	
	DESIGNED BY:	ZBU	2-20-2020	
Correct scale on size B paper (11x17 Ledger)	CHECKED BY:	KLS	2-28-2020	

FASCIA PLATE NOTES:

1. PROJECT TO INCLUDE TWO (2) TOTAL 6" THICK PRECAST CONCRETE FASCIA PANELS
2. FINISH SURFACE TO BE NATURAL CONCRETE
3. REINFORCING: ASTM A615 GRADE 60 EPOXY COATED
4. CONCRETE SHALL BE GRADE AA, 4000 PSI, CLASS H.E.S.
5. EXPANSION ANCHORS SHALL BE MANUFACTURED ACCORDING TO ASTM B633, TYPE III, SC1 AND SHALL COMPLY WITH A-A-1923A-416, TYPE 4, CLASS 1
6. LIFTING ANCHORS WILL BE DAYTON SUPERIOR P52 SWIFT LIFT ANCHORS SIZE AND LENGTH AS NOTED

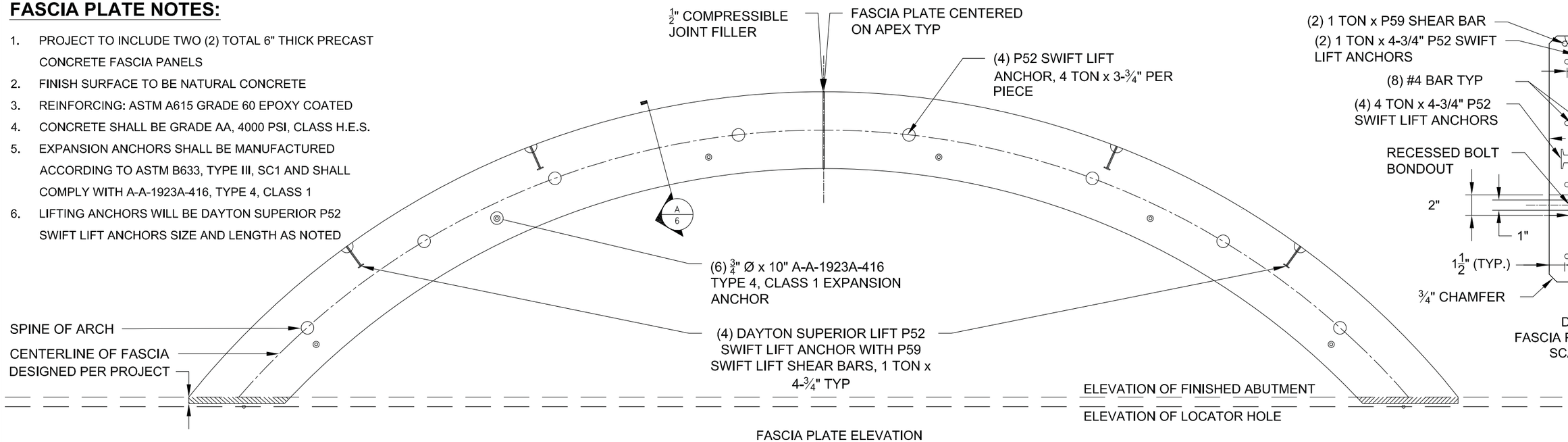

FASCIA PLATE ELEVATION

DETAIL A
FASCIA PLATE SECTION
SCALE = 1:10

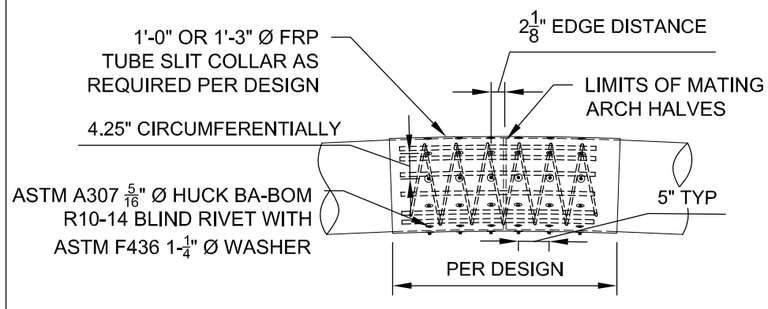

ARCH CONSTRUCTION SPLICE ELEVATION
[IF NECESSARY FOR SHIPPING]
NOTE: LOCATION DETAILED PER DESIGN

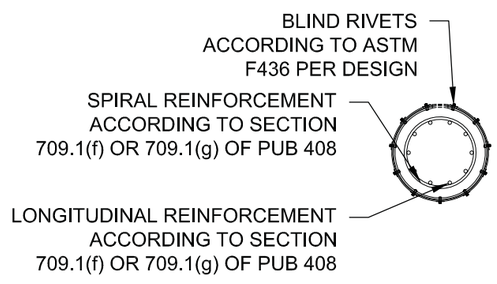

ARCH CONSTRUCTION SPLICE SECTION
[IF NECESSARY FOR SHIPPING]
NOTE: DESIGNER TO DETAIL REINFORCEMENT CAGE TO PROVIDE MINIMUM CLEAR COVER

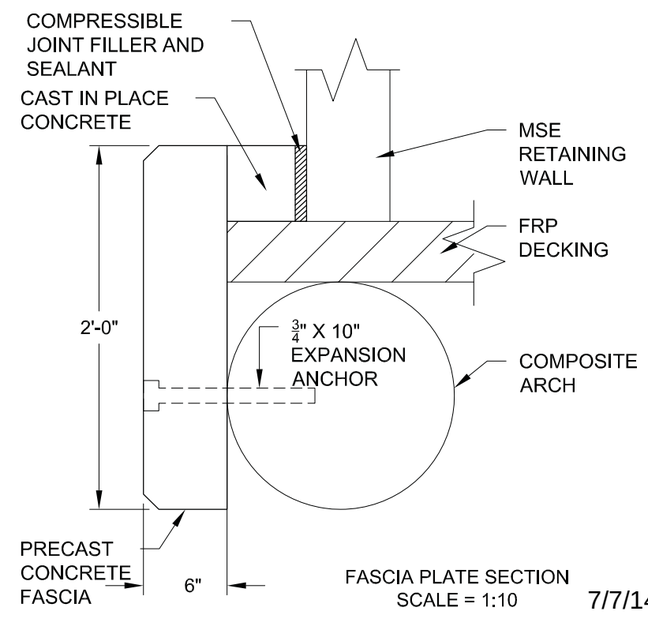

FASCIA PLATE SECTION
SCALE = 1:10

7/7/14

3/20/2020

PENNDOT DRAWING 2013-236 REV. 1

AIT BRIDGES
A Division of Advanced Infrastructure Technologies

55 BAKER BLVD, SUITE 205
BREWER, ME 04412
Tel 207.573.9055
www.aitbridges.com

PROJECT: Sample JN: YR-XXX (EG. 13020)	TITLE: COMPOSITE ARCH BRIDGE SYSTEM FASCIA PLATE LAYOUT		SHEET NUMBER:
LOCATION: Sample		INITIALS	DATE
DRAWING STATUS: Sample	DRAWN BY:	TAK	2-20-2020
	DESIGNED BY:	ZBU	2-20-2020
Correct scale on size B paper (11x17 Ledger)	CHECKED BY:	KLS	2-28-2020

6 OF 7

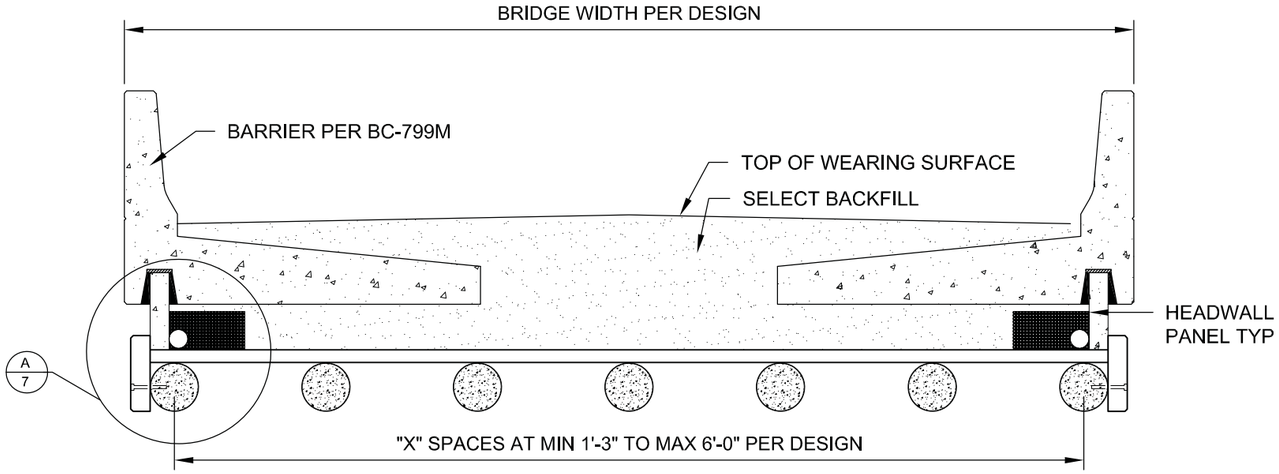

SECTION A-A

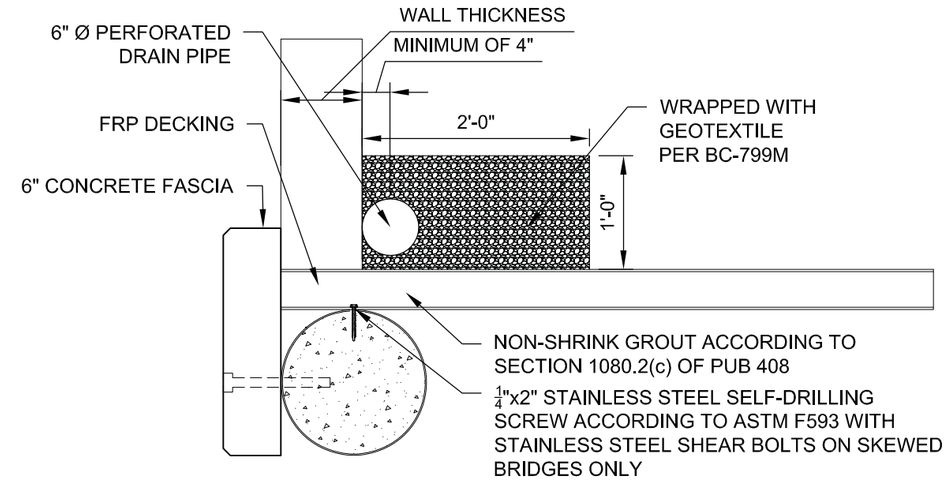

HEADWALL CONNECTION AND DRAINAGE DETAIL A

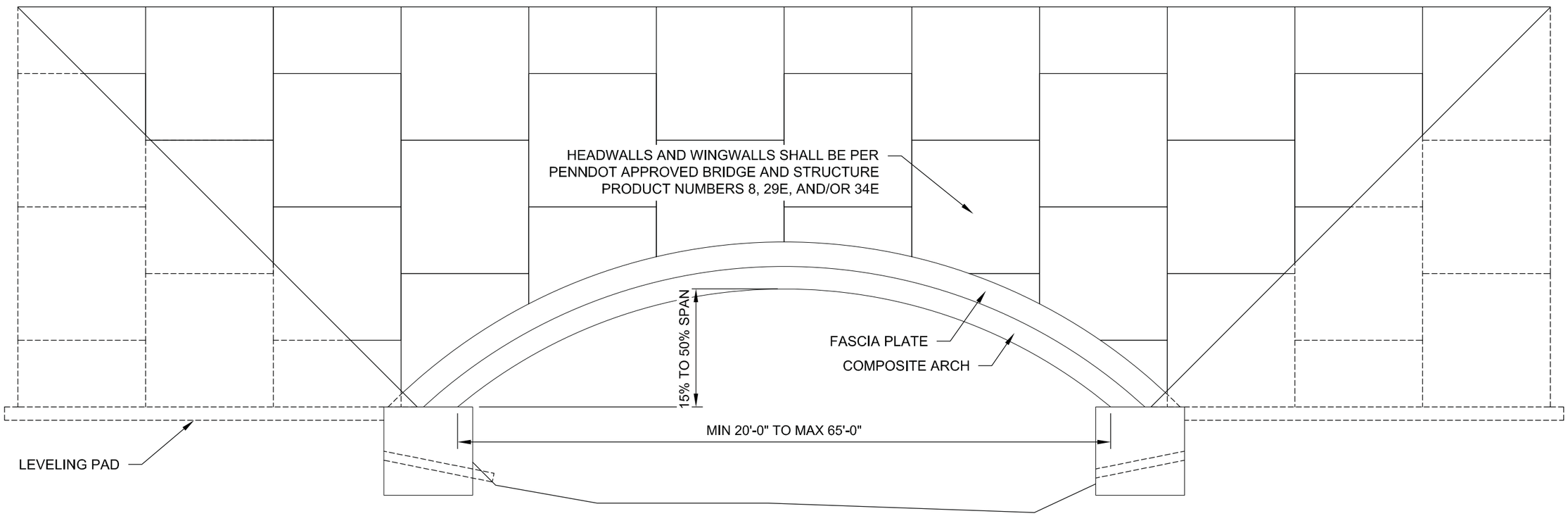

GENERAL ELEVATION

7/7/14

3/20/2020 PENNDOT DRAWING 2013-236 REV. 1

AIT BRIDGES
A Division of Advanced Infrastructure Technologies

55 BAKER BLVD, SUITE 205
BREWER, ME 04412
Tel 207.573.9055
www.aitbridges.com

PROJECT: Sample JN: YR-XXX (EG. 13020)	TITLE: COMPOSITE ARCH BRIDGE SYSTEM HEADWALL AND DRAINAGE DETAIL		SHEET NUMBER:
LOCATION: Sample	INITIALS	DATE	7 OF 7
DRAWING STATUS: Sample	DRAWN BY: TAK	2-20-2020	
	DESIGNED BY: ZBU	2-20-2020	
Correct scale on size B paper (11x17 Ledger)	CHECKED BY: KLS	2-28-2020	

Product:

Item 9000-7008 – BarrierGuard 800
Portable Steel Barrier System
Highway Care Ltd
PennDOT Drawing # 14-602-BDTD

Approval Date:
July 24, 2014

Initiated By SOL:
483-14-06

Application/Use:

BarrierGuard 800 Portable Steel Barrier System manufactured by Highway Care Ltd of Kent, Maine has been approved for use as a temporary barrier (structure mounted).

BarrierGuard 800 Portable Steel Barrier System usage has the following restrictions:

- Only to be used for temporary installations (i.e., less than three (3) years).
- "Standard Installation without T-Top" configuration of this barrier with a 4 ft. - 11 in. width of deck behind it is approved as an NCHRP 350 Test Level 4 (TL-4) longitudinal barrier.
- "Standard Installation without T-Top" configuration of this barrier with a 4 ft. - 11 in. width of deck behind it is approved as an NCHRP 350 Test Level 3 (TL-3) longitudinal barrier.
- "Minimum Deflection Installation with T-Top and 40 ft. anchor spacing" configuration of this barrier with 2 ft. - 11 in. deck width behind it is approved as an NCHRP 350 Test Level 3 (TL-3) longitudinal barrier.
- "Minimum Deflection Installation with T-Top and 20 ft. anchor spacing" configuration of this barrier with 3 in. deck width behind it is approved as an NCHRP 350 Test Level 3 (TL-3) longitudinal barrier.
- See the General Notes on drawing Sheet 1 for additional details. The amount of permanent deflection at the base is listed along with the dynamic deflection for each configuration.
- Two different sizes of anchors are permitted and have either 4" or 6" embedment depths required into concrete bridge deck. Anchor quantities and locations are shown on PennDOT Drawing # 14-602-BDTD, Sheet 3.
- Adhesive anchors are to comply with and be installed and tested per Pub. 408 Section 643.
- Maximum length of barrier unit is 39 ft. - 4 5/16 in.
- Barrier system is not permitted for use when asphalt overlay thickness exceeds 3 in. For installation of barrier on asphalt overlay, anchors require pipe sleeves which match the thickness of the overlay.
- Two types of blunt end treatment transitions are included on drawing Sheets 7 and 8.
- Chief Bridge Engineer approval is required for Temporary Steel Barrier Systems use on bridge decks which exceed these limitations.

Specifications:

Design/Material/Construction Specifications for this temporary barrier system are specified on PennDOT Drawing # 14-602-BDTD, dated 7/24/14 of BarrierGuard 800 Portable Steel Barrier System details for your use.

Comments:

The contractor will be required to revise the pertinent contract drawings as per DM-4, PP 1.10 to show the usage of "BarrierGuard 800 Portable Steel Barrier System".

GENERAL NOTES UNLESS OTHERWISE SPECIFIED:

1. THE SYSTEM SHOWN ON THIS DRAWING, PENNDOT DWG NO. 14-602-BDTD, IS A PROPRIETARY BARRIER TRADED AS BARRIERGUARD 800 AND BARRIERGUARD 800 MDS AND HAS BEEN DESIGNED AND MANUFACTURED BY HIGHWAY CARE LTD.

2. THE BARRIERGUARD 800 SYSTEM HAS BEEN CRASH TESTED TO NCHRP 350 AND HAS FHWA APPROVAL AS A TL-3 AND TL-4 BARRIER. THE DEFLECTION TABLE ON PAGE 6 OUTLINES BASIC SYSTEM PERFORMANCE AND COMPONENT ANCHORING REQUIREMENTS.

3. THIS DRAWING PACKAGE PROVIDES THE RELEVANT INFORMATION AND GENERAL GRAPHICS REQUIRED TO IDENTIFY THE COMPONENT PARTS OF BARRIERGUARD 800 AND THEIR INCORPORATION AS A WHOLE SYSTEM FOR DEPARTMENTAL STANDARD APPLICATIONS.

4. BARRIERGUARD 800 REQUIRES ANCHORING (PINNING) AT EACH END OF THE INSTALLED LENGTH. (TO REDUCE DEFLECTION, INTERMEDIATE ANCHORS CAN BE USED WHERE REQUIRED SEE PAGES 2 & 5).

5. INSTALLATION OF BARRIERGUARD 800 OR BARRIERGUARD 800 MDS, NORMALLY STARTS WITH A MALE TERMINAL SECTION (BG-10-11) AND IS FINISHED WITH A FEMALE TERMINAL SECTION (BG-10-12). STANDARD SECTIONS ARE USED BETWEEN THE TERMINAL SECTIONS TO OBTAIN THE REQUIRED LENGTH OF POSITIVE BARRIER PROTECTION.

6. THE FULL HEIGHT TERMINAL (FHT) SECTIONS MAY BE CAPPED WITH A FHT COVER, HOWEVER IF EXPOSED TO ON-COMING TRAFFIC THE END SHOULD BE PROTECTED WITH A SUITABLE CRASH CUSHION. THE BARRIERGUARD 800 RANGE IS COMPATIBLE WITH MOST COMMONLY USED CRASH CUSHION END TREATMENTS. FOR DETAILS OF BARRIERGUARD 800 CRASH CUSHION CONNECTIONS THAT ARE NOT DETAILED WITHIN THESE DRAWINGS, PLEASE CONTACT HIGHWAY CARE LTD FOR MORE DETAILS. THE FULL HEIGHT TERMINAL COVER IS SUITABLE FOR THE "DOWN STREAM" END OF A SYSTEM THAT DOES NOT HAVE EXPOSURE TO ON-COMING TRAFFIC.

7. WHEN INSTALLING EITHER OF THE MINIMUM DEFLECTION SYSTEMS (MDS), THE SYSTEM CAN BE INSTALLED WITH ADDITIONAL INTERMEDIATE ANCHORS AT INTERVALS SHOWN IN THE TABLE ON SHEET 6.

8. THERE ARE SEVERAL METHODS OF ACHIEVING RADIUS IN A LENGTH OF BARRIERGUARD 800. RADIUS CAN BE ACHIEVED USING VARIOUS METHODS AND THUS ALLOWING THE BARRIERGUARD TO FOLLOW THE DESIRED CURVATURE IN THE INSTALLATION, THESE METHODS ARE, THE MOVEMENT IN THE QUICKLINK , ADJUSTABLE 20FT [6m] SECTIONS OR SHORT ANGLED SECTIONS WHICH ALLOW A RADIUS AS LOW AS 12FT [3.65m]. FOR FURTHER INFORMATION AND ADVICE CONTACT HIGHWAY CARE LTD.

9. A BARRIERGUARD 800 VARIABLE LENGTH BARRIER (VLB) SECTION SHOULD BE USED WHEN BARRIERGUARD 800 OR BARRIERGUARD 800 MDS IS ANCHORED ACROSS A BRIDGE EXPANSION JOINT.IF T-TOP IS TO BE USED IN CONJUNCTION WITH THE VLB, THE T-TOP SHOULD BE USED FOR MINIMUM 40FT [12M] ON EITHER SIDE OF THE VLB AND TERMINATED WITH TRANSITIONS. THE VLB SECTION PROVIDES APPROXIMATELY 7in [178mm] OF EXTENSION AND 7in [178mm] OF CONTRACTION. MULTIPLE VLB'S CAN BE LINKED TOGETHER TO PROVIDE MORE EXPANSION OR CONTRACTION. THE VLB'S SHOULD BE PLACED IN THE VICINITY OF THE EXPANSION JOINT. THE VLB DOES NOT NEED TO BE PLACED DIRECTLY OVER THE EXPANSION JOINT BUT MUST BE BETWEEN THE NEAREST ANCHORS ON EACH SIDE OF THE JOINT. IT IS RECOMMENDED THAT THE VLB IS PLACED WITHIN 40FT [12M] OF THE JOINT.

10. THE T-TOP CAN BE INSTALLED EITHER BEFORE OR AFTER THE BARRIERGUARD 800 HAS BEEN FULLY ASSEMBLED AND ANCHORED IN PLACE. T-TOP IS REQUIRED WHEN THE BARRIERGUARD 800 IS USED AS A MDS, ANCHORED EVERY 20FT [6m], GATE SECTIONS AND VARIABLE LENGTH BARRIERS. THE T-TOP SHOULD EXTEND 40FT [12m] ON EITHER SIDE OF THESE CONDITIONS AND BE TERMINATED WITH TRANSITIONS.

11. THE BARRIERGUARD 800 RANGE HAS BEEN DESIGNED TO BE USED ON AND HAS BEEN TESTED ANCHORED ON ASPHALT AND CONCRETE. SEE ANCHORAGE REQUIREMENTS TABLE OR CONTACT HIGHWAY CARE FOR FURTHER INFORMATION.

12. BARRIERGUARD 800 COMPONENTS ARE MANUFACTURED IN SI [METRIC] UNITS. ENGLISH UNITS SHOWN ARE APPROXIMATE. ALL COMPONENTS ARE FULLY GALVANIZED.

13. FOR TECHNICAL ASSISTANCE AND APPLICATION SUPPORT PLEASE CONTACT HIGHWAY CARE, LTD. ON EITHER (702) 204-0732 OR (702) 341-7374, ALTERNATIVLY EMAIL: sam.arnold@highwaycare.com <mailto:sam.arnold@highwaycare.com>, OR engineering@highwaycare.com <mailto:engineering@highwaycare.com>

14. BARRIERGUARD 800 SYSTEMS SHALL BE ASSEMBLED AND INSTALLED IN ACCORDANCE WITH THE MANUFACTURERS DETAILED DRAWINGS, PROCEDURES AND SPECIFICATIONS. FOR ANY INSTALATIONS OUTSIDE OF THE SCOPE OF THESE DRAWINGS PLEASE CONTACT HIGHWAY CARE LTD FOR DETAILS.

15. THIS DRAWING PROVIDES DETAILS OF THE TEMPORARY INSTALLATION OF BARRIERGUARD 800 & BARRIERGUARD 800 MDS ON STRUCTURES.

16. BARRIERGUARD 800 SYSTEM IS DESIGNED TO BE USED IN EITHER PERMINANT OR TEMPORARY APPLICATIONS. HOWEVER, CHIEF BRIDGE ENGINEER APPROVAL IS REQUIRED IF BARRIERGUARD 800 SYSTEM IS USED FOR PERMANENT APPLICATIONS.

ANCHORING REQUIREMENTS - STRUCTURES

	8 in. MINIMUM CONCRETE DECK WITH OR WITHOUT ASPHALT WEARING SURFACE	6 in. CONCRETE DECK WITH OR WITHOUT ASPHALT WEARING SURFACE
Anchor Diameter	1 in.	5/8 in.
Embedment Depth Into Concrete	6 in	4 in.
Drill Diameter	1 1/8 in	1 3/16 in

NOTES:
1) ANCHOR MATERIAL SHALL BE THREADED ROD PER ASTM F1554 GR55.
2) QUANTITY OF 5/8" ANCHORS MUST BE DOUBLED.
3) ADHESIVE SHAL BE HILTI HIT-RE-500 OR HIT-HY-150 OR EQUAL.

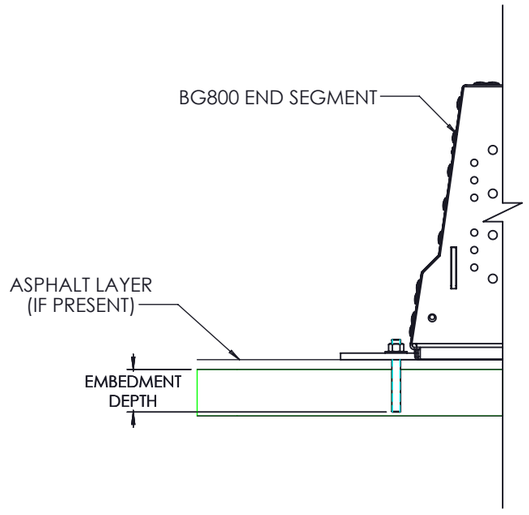

PENNSYLVANIA
DEPARTMENT OF TRANSPORTATION
RECOMMENDED

Thomas P Macioce

CHIEF BRIDGE ENGINEER

7 / 24 / 2014

Ensure drawing is the correct issue and release before using.

The Highlands
Detling Hill
Detling
Maidstone
Kent ME14 3HT
Tel. +44 (0) 1622 734215
Fax. +44 (0) 1622 735106
www.highwaycare.co.uk

Highway Care Ltd

The information hereon is proprietary to Highway Care Ltd and shall not be disclosed, duplicated or used otherwise, without the express written approval of Highway Care Ltd.

Rev.	Details.	Dwn.	Date.	Ch'k'd	-

PENNDOT DWG NO. 14-602-BDTD

Title: BARRIERGUARD 800 - SYSTEM DRAWINGS GENERAL NOTES

ISO A3 Landscape | DO NOT SCALE | SHEET 1 OF 17

BARRIERGUARD 800 COMPONENTS IDENTIFICATION LAYOUT

T-TOP MOUNTING DETAIL

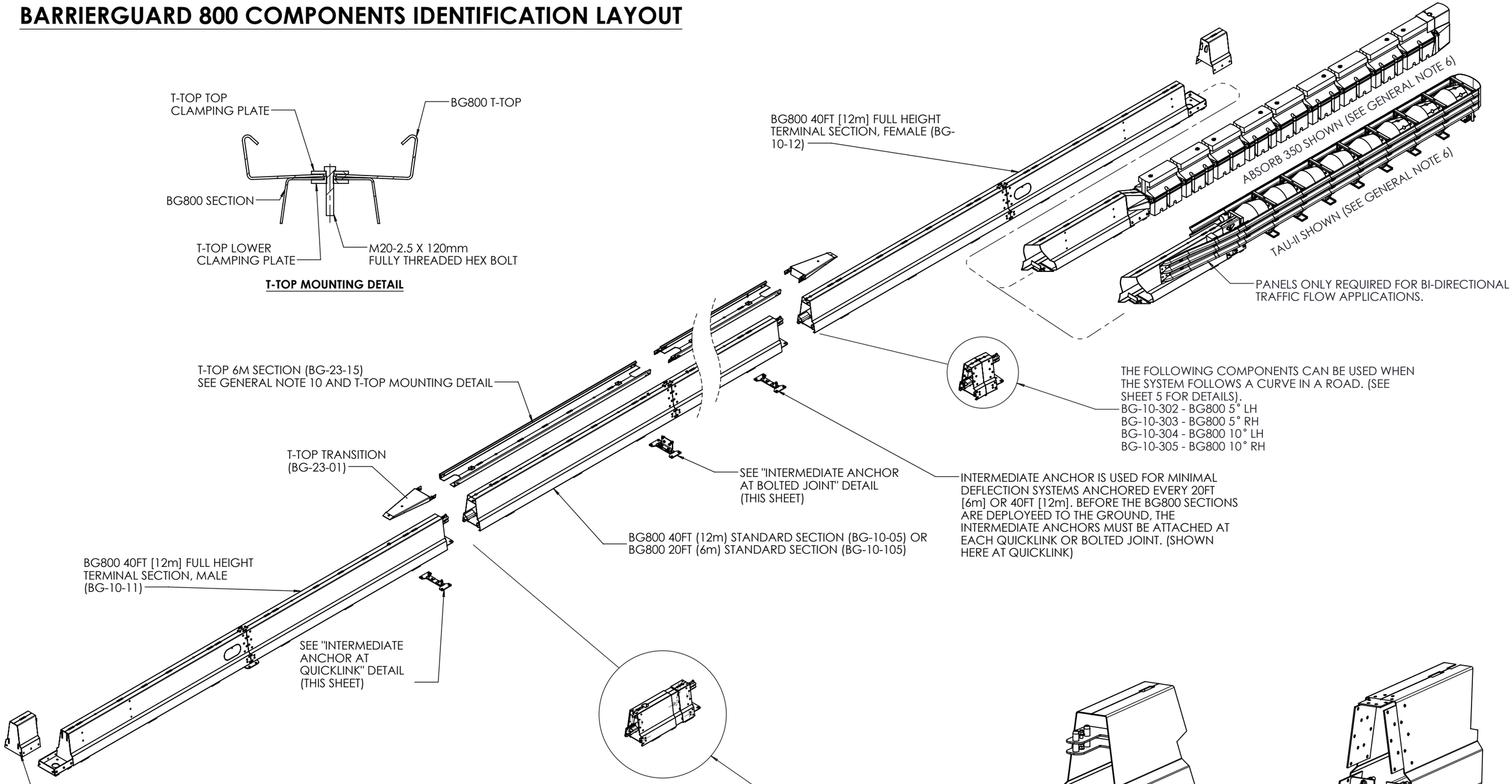

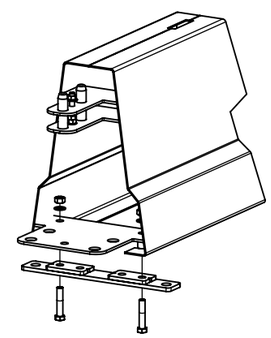

INTERMEDIATE ANCHOR AT QUICKLINK

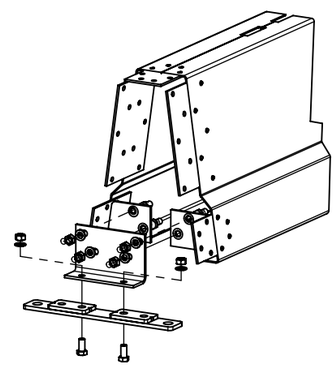

INTERMEDIATE ANCHOR AT BOLTED JOINT

7 / 24 / 2014

Ensure drawing is the correct issue and release before using.

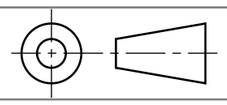

The Highlands
Detling Hill
Detling
Maidstone
Kent ME14 3HT
Tel. +44 (0) 1622 734215
Fax. +44 (0) 1622 735106
www.highwaycare.co.uk

Highway Care Ltd

The information hereon is proprietary to Highway Care Ltd and shall not be disclosed, duplicated or used otherwise, without the express written approval of Highway Care Ltd.

Rev.	Details.	Dwn.	Date.	Ch'k'd	-

PENNDOT DWG NO. 14-602-BDTD

Title: BARRIERGUARD 800 - SYSTEM DRAWINGS GENERAL LAYOUT DETAILS

ISO A3 Landscape | DO NOT SCALE | SHEET 2 OF 17

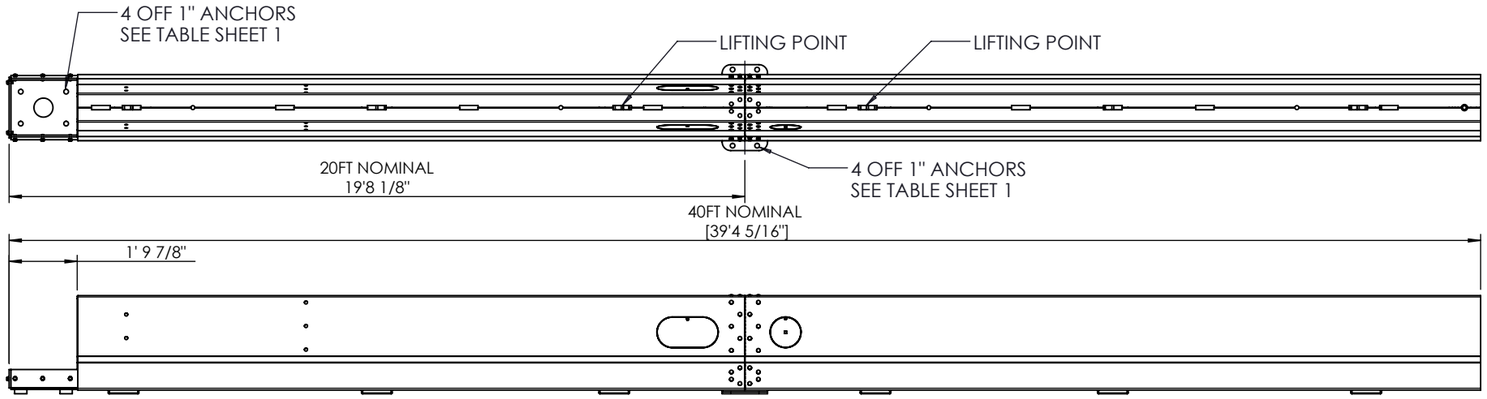

BG800 40FT FEMALE FULL HEIGHT TERMINAL (BG-10-12) WITH EXTERNAL ANCHOR SHOE (BG-11-01)

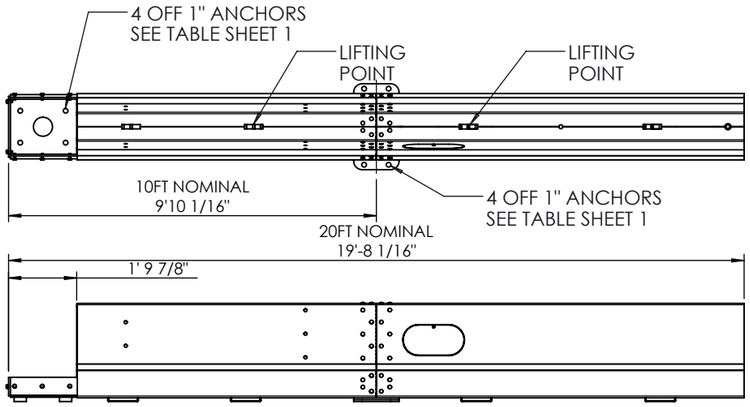

BG800 20FT FEMALE FULL HEIGHT TERMINAL (BG-10-112)
WITH EXTERNAL ANCHOR SHOE (BG-11-01)

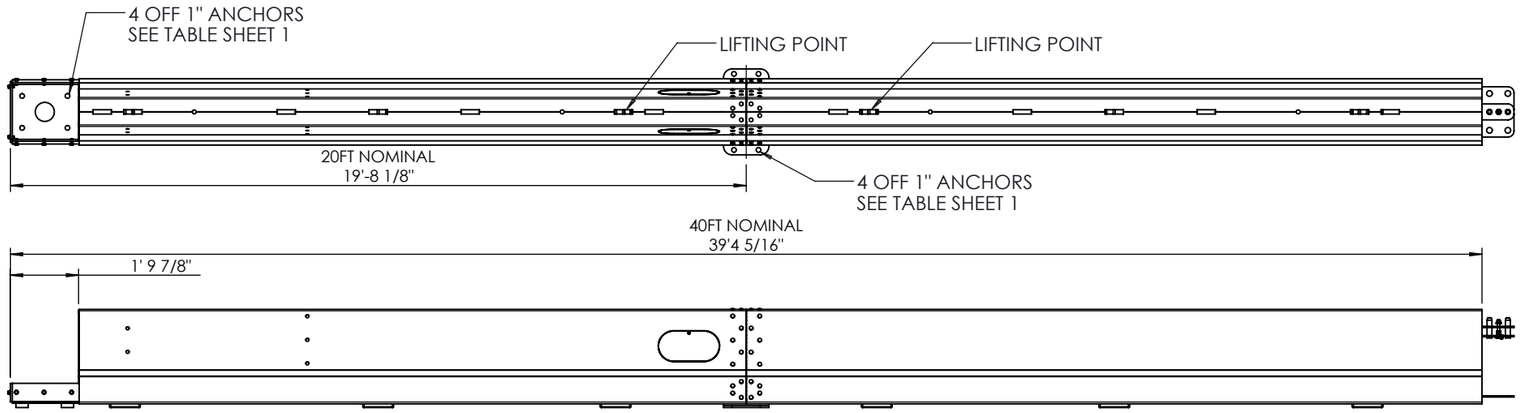

BG800 40FT MALE FULL HEIGHT TERMINAL (BG-10-11) WITH EXTERNAL ANCHOR SHOE (BG-11-01)

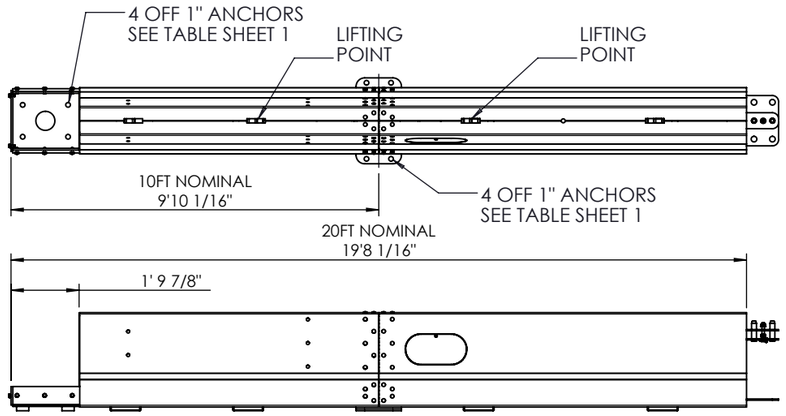

BG800 20FT MALE FULL HEIGHT TERMINAL (BG-10-111)
WITH EXTERNAL ANCHOR SHOE (BG-11-01)

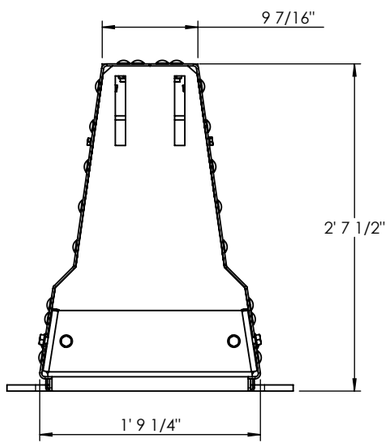

TYPICAL CROSS SECTION

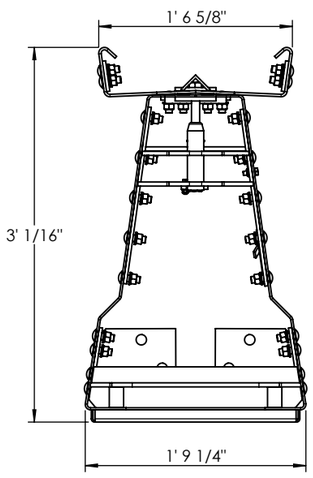

TYPICAL CROSS SECTION WITH T-TOP

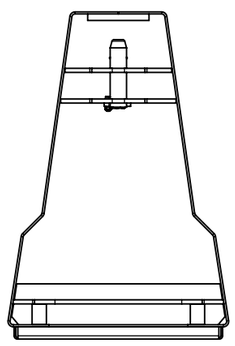

TYPICAL CROSS SECTION
MALE END

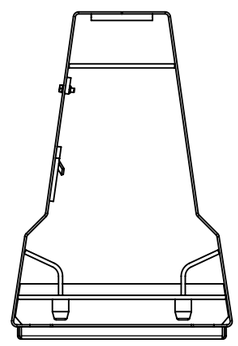

TYPICAL CROSS SECTION
FEMALE END

7 / 24 / 2014

Ensure drawing is the correct issue and release before using.

The Highlands
Detling Hill
Detling
Maidstone
Kent ME14 3HT
Tel. +44 (0) 1622 734215
Fax. +44 (0) 1622 735106
www.highwaycare.co.uk

Highway Care Ltd

The information hereon is proprietary to Highway Care Ltd and shall not be disclosed, duplicated or used otherwise, without the express written approval of Highway Care Ltd.

Rev.	Details.	Dwn.	Date.	Ch'k'd	-

PENNDOT DWG NO. 14-602-BDTD

Title: BARRIERGUARD 800 - SYSTEM DRAWINGS
END UNIT DETAILS

ISO A3 Landscape | DO NOT SCALE | SHEET 3 OF 17

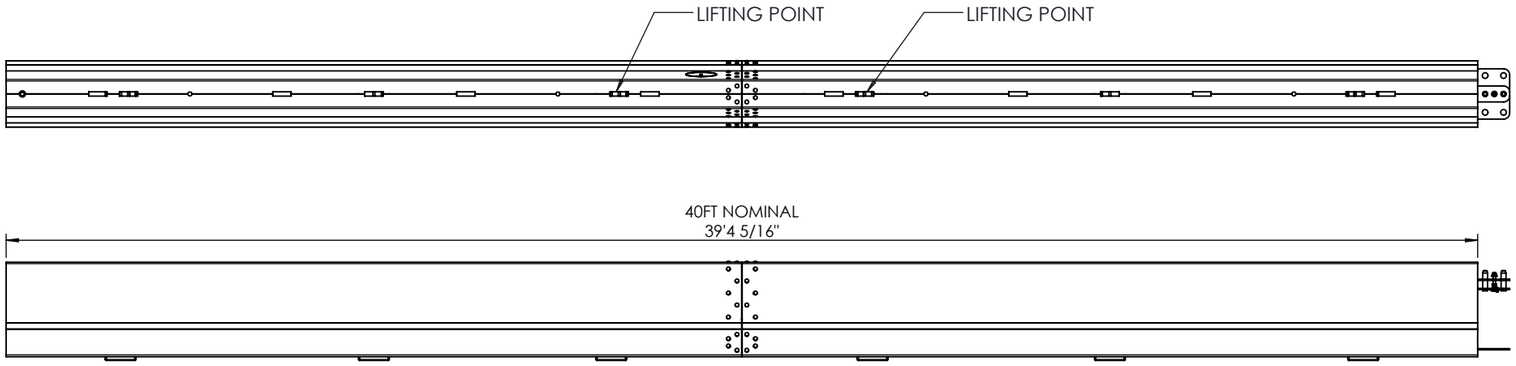

BG800 40FT STANDARD SECTION (BG-10-05)

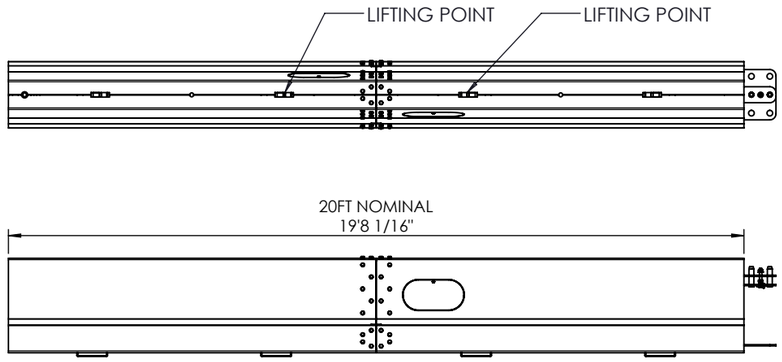

BG800 20FT STANDARD SECTION (BG-10-105)

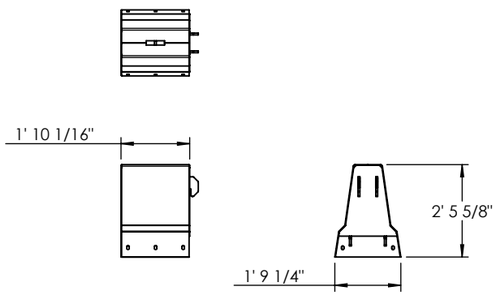

BG800 FULL HEIGHT TERMINAL COVER (BG-20-09)

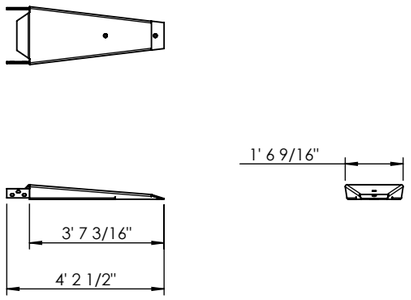

BG800 T-TOP TRANSITION (BG-23-01)

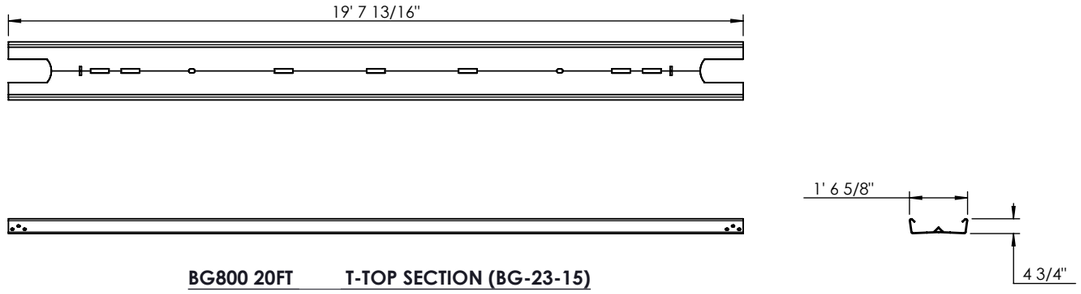

BG800 20FT T-TOP SECTION (BG-23-15)

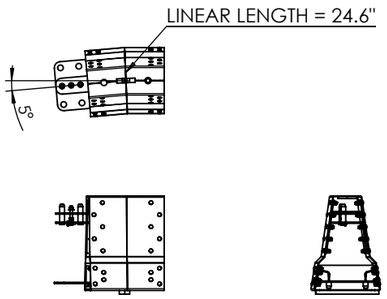

BG800 5° LH ANGLED SECTION (BG-10-302)

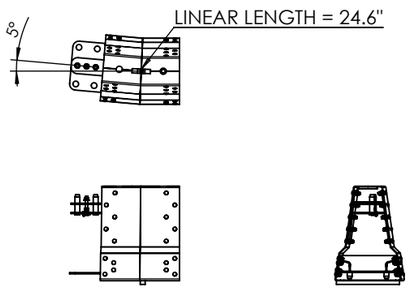

BG800 5° RH ANGLED SECTION (BG-10-303)

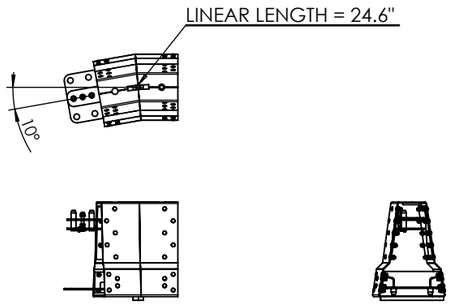

BG800 10° LH ANGLED SECTION (BG-10-304)

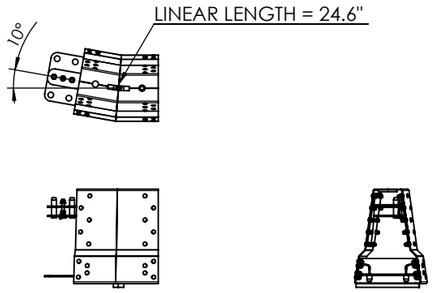

BG800 10° RH ANGLED SECTION (BG-10-305)

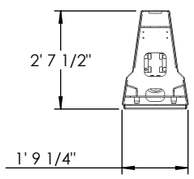

BG800 VARIABLE LENGTH BARRIER

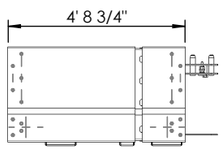

RETRACTED POSITION

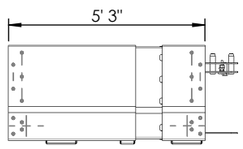

NEUTRAL POSITION

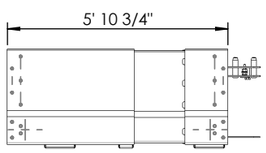

EXTENDED POSITION

7 / 24 / 2014

Ensure drawing is the correct issue and release before using.

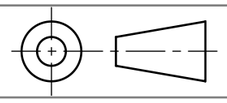

The Highlands
Detling Hill
Detling
Maidstone
Kent ME14 3HT
Tel. +44 (0) 1622 734215
Fax. +44 (0) 1622 735106
www.highwaycare.co.uk

Highway Care Ltd

The information hereon is proprietary to Highway Care Ltd and shall not be disclosed, duplicated or used otherwise, without the express written approval of Highway Care Ltd.

Rev.	Details.	Dwn.	Date.	Ch'k'd	-

PENNDOT DWG NO. 14-602-BDTD

Title: BARRIERGUARD 800 - SYSTEM DRAWINGS STANDARD COMPONENT DETAIL

ISO A3 Landscape | DO NOT SCALE | SHEET 4 OF 17

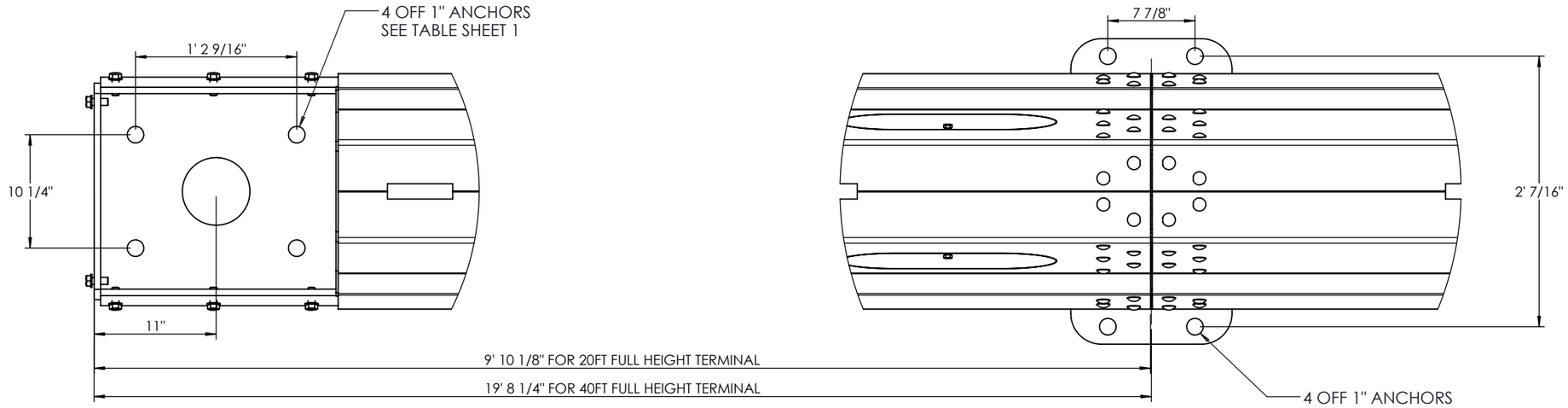

FULL HEIGHT TERMINAL - ANCHORING DETAIL.

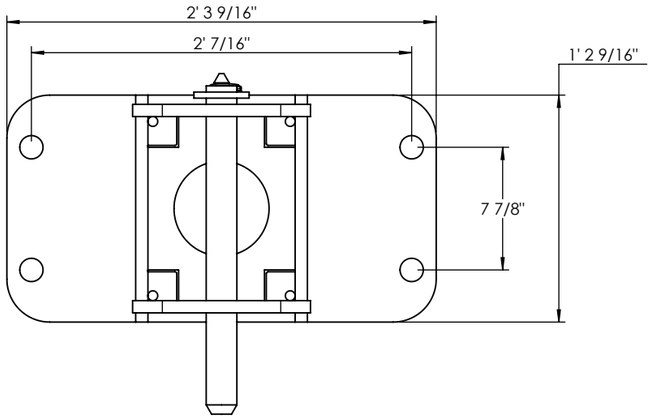

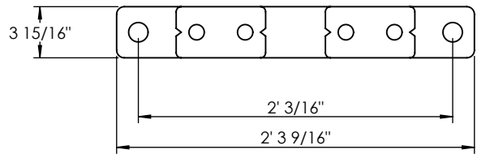

INTERMEDIATE ANCHOR (BG-21-06)

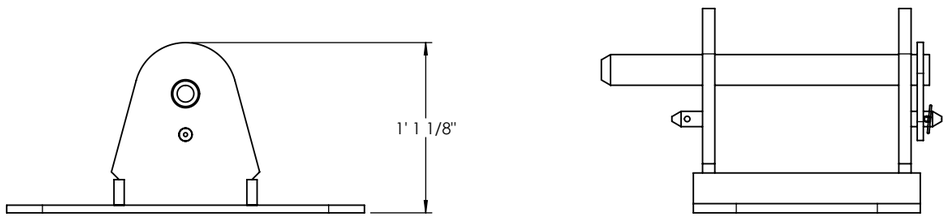

EXTERNAL ANCHOR SHOE ASSEMBLY (BG-11-01)

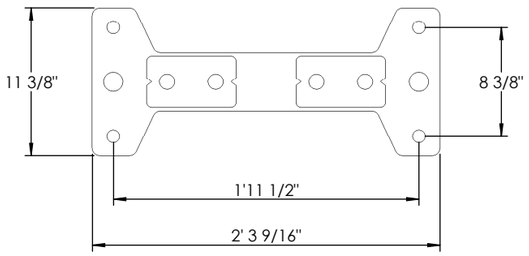

"BOW TIE 5/8" INTERMEDIATE ANCHOR (BG-21-23)

7 / 24 / 2014

Ensure drawing is the correct issue and release before using.

The Highlands
Detling Hill
Detling
Maidstone
Kent ME14 3HT
Tel. +44 (0) 1622 734215
Fax. +44 (0) 1622 735106
www.highwaycare.co.uk

Highway Care Ltd

The information hereon is proprietary to Highway Care Ltd and shall not be disclosed, duplicated or used otherwise, without the express written approval of Highway Care Ltd.

Rev.	Details.	Dwn.	Date.	Ch'k'd	-

PENNDOT DWG NO. 14-602-BDTD

Title: BARRIERGUARD 800 - SYSTEM DRAWINGS ANCHOR POINT DETAIL

ISO A3 Landscape | DO NOT SCALE | SHEET 5 OF 17

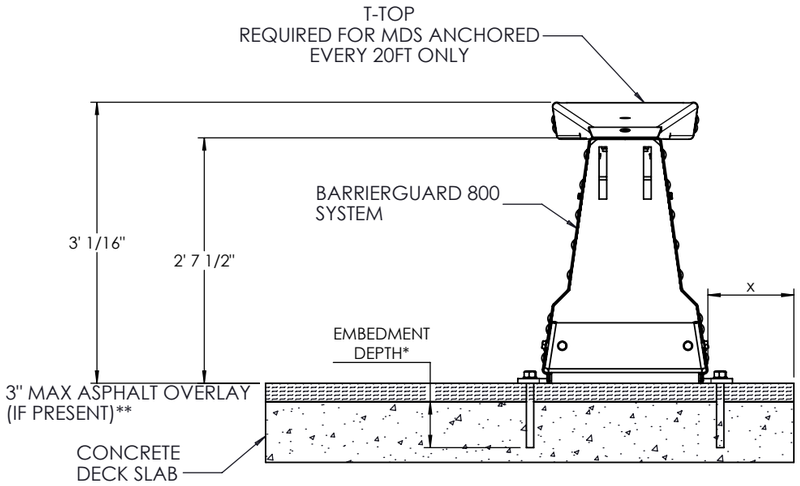

BARRIERGUARD 800 CONCRETE ANCHORING DETAIL

NOTES:
*SEE ANCHORING REQUIREMENTS TABLES SHEET 1 FOR EMBEDMENT DEPTH.
** STANDARD INSTALLATION IS NOT ALLOWED FOR CONCRETE DECK SLAB WITH ASPHALT OVERLAY.

DEFLECTION REQUIREMENTS

INSTALLATION Shielding/ Hazard	TEST LEVEL	STANDARD INSTALLATIONS ANCHORED ON EACH END AND 20 FT (ALT. 10 FT) IN FROM EACH END ONLY. NO T-TOP	MDS SYSTEM ANCHORED EVERY 40FT WITH T-TOP	MDS SYSTEM ANCHORED EVERY 20FT WITH T-TOP STANDARD ANCHOR DETAIL
		MIN DEFLECTION SPACE (X)	MIN DEFLECTION SPACE (X)	MIN DEFLECTION SPACE (X)
SHIELDING EDGE OF DECK / PROTECTING WORKS AREA	TL-4	4' - 11"	N/A	N/A
	TL-3	4' - 11"	2' - 11"	1' - 0" AT TOP OF BARRIER 3" AT BASE OF BARRIER

7 / 24 / 2014

Ensure drawing is the correct issue and release before using.

The Highlands
Detling Hill
Detling
Maidstone
Kent ME14 3HT
Tel. +44 (0) 1622 734215
Fax. +44 (0) 1622 735106
www.highwaycare.co.uk

Highway Care Ltd

The information hereon is proprietary to Highway Care Ltd and shall not be disclosed, duplicated or used otherwise, without the express written approval of Highway Care Ltd.

Rev.	Details.	Dwn.	Date.	Ch'k'd	-

PENNDOT DWG NO. 14-602-BDTD

Title
BARRIERGUARD 800 - SYSTEM DRAWINGS
DEFLECTION REQUIREMENTS

ISO A3 Landscape | DO NOT SCALE | SHEET 6 OF 17

NOTES:
1) THE UNIVERSAL TAU-II CRASH CUSHION I S MANUFACTURED BY LINDSEY TRANSPORTATION SOLUTIONS. CONTACT LINDSEY TRANSPORTATION SOLUTIONS VIA WWW.BARRIERSYSTEMSINC.COM
2) TRANSITION PANELS ARE ONLY REQUIRED WHEN TRAFFIC IS APPROACHING FROM DOWNSTREAM OF THE CUSHION.

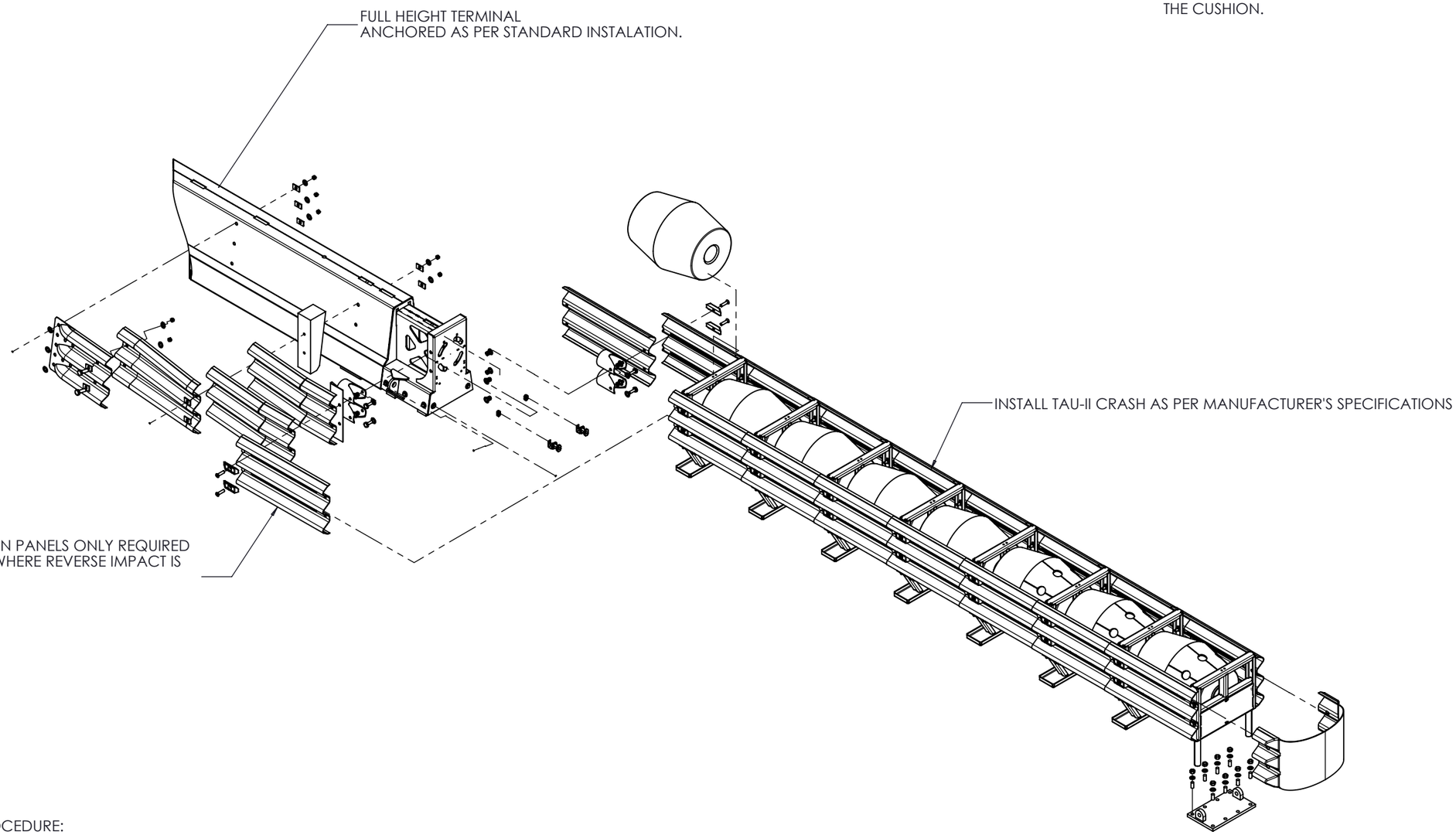

INSTALLATION PROCEDURE:

1)INSTALL AND ANCHOR THE BARRIERGUARD 800 FULL HEIGHT TERMINAL.
2)LIFT ON AND BOLT UP THE TAU-II FULL HIEGHT TERMINAL COVER.
3) INSTALL THE UNIVERSAL TAU-II CRASH CUSHION AS PER THE MANUFACTURERS INSTRUCTIONS.
4)IF REQUIRED - INSTALL THE TRANSITIONS PANELS.

UNIVERSAL TAU-11 CRASH CUSHION

7 / 24 / 2014

Ensure drawing is the correct issue and release before using.

The Highlands
Detling Hill
Detling
Maidstone
Kent ME14 3HT
Tel. +44 (0) 1622 734215
Fax. +44 (0) 1622 735106
www.highwaycare.co.uk

Highway Care Ltd

The information hereon is proprietary to Highway Care Ltd and shall not be disclosed, duplicated or used otherwise, without the express written approval of Highway Care Ltd.

Rev.	Details.	Dwn.	Date.	Ch'k'd	-

PENNDOT DWG NO. 14-602-BDTD

Title
BARRIERGUARD 800 - SYSTEM DRAWINGS
UNIVERSAL TAU-11 CRASH CUSHION DETAIL

ISO A3 Landscape | DO NOT SCALE | SHEET 7 OF 17

NOTES:
1) THE ABSORB CRASH CUSHION I S MANUFACTURED BY LINDSEY TRANSPORTATION SOLUTIONS. CONTACT LINDSEY TRANSPORTATION SOLUTIONS VIA WWW.BARRIERSYSTEMSINC.COM

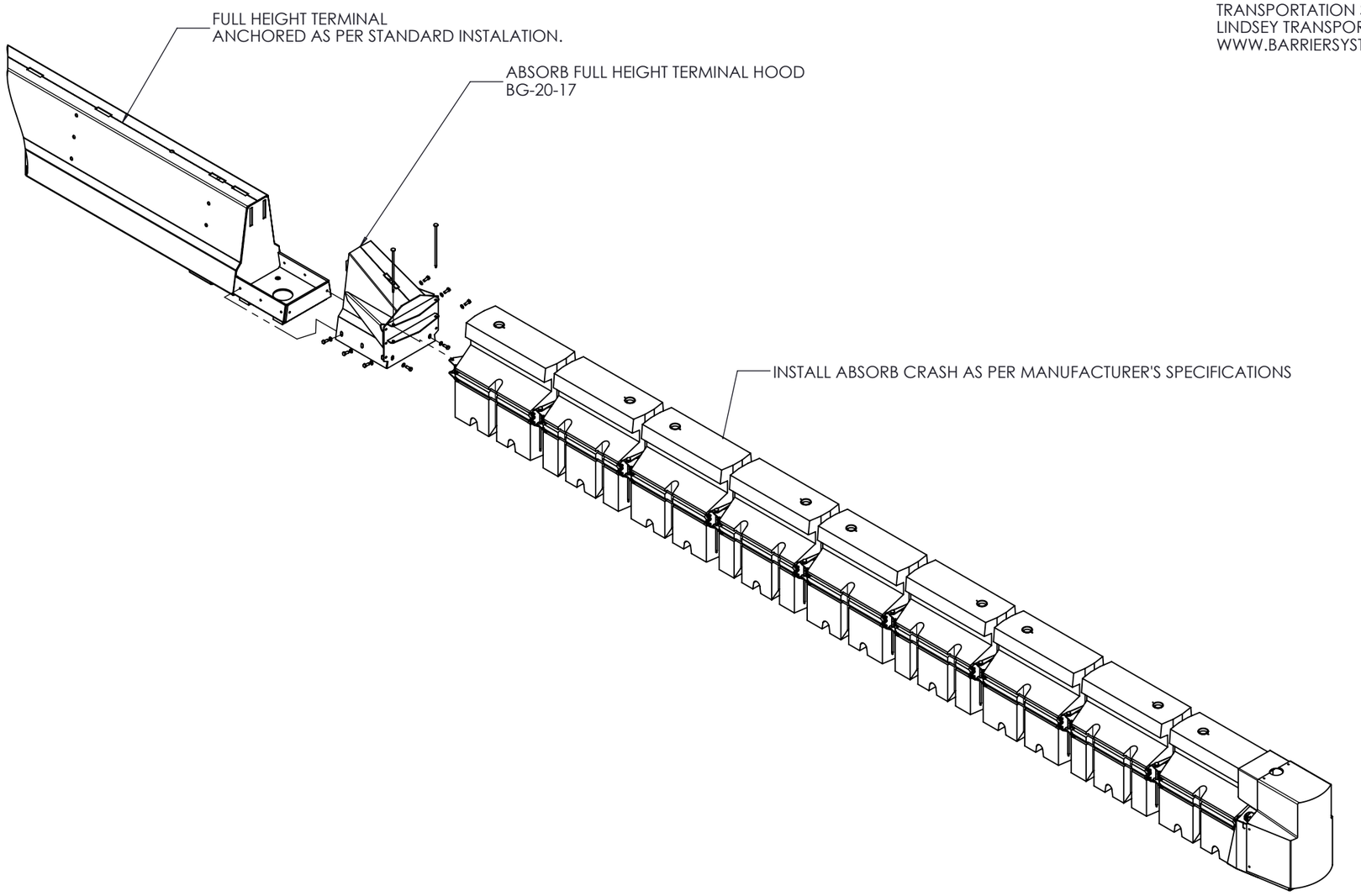

INSTALLATION PROCEDURE:

1)INSTALL AND ANCHOR THE BARRIERGUARD 800 FULL HEIGHT TERMINAL.
2)LIFT ON AND BOLT UP THE ABSORB FULL HIEGHT TERMINAL COVER.
3) INSTALL THE ABSORB CUSHION AS PER THE MANUFACTURERS INSTRUCTIONS.

ABSORB CRASH CUSHION

7 / 24 / 2014

Ensure drawing is the correct issue and release before using.

The Highlands
Detling Hill
Detling
Maidstone
Kent ME14 3HT
Tel. +44 (0) 1622 734215
Fax. +44 (0) 1622 735106
www.highwaycare.co.uk

Highway Care Ltd

The information hereon is proprietary to Highway Care Ltd and shall not be disclosed, duplicated or used otherwise, without the express written approval of Highway Care Ltd.

Rev.	Details.	Dwn.	Date.	Ch'k'd	-

PENNDOT DWG NO. 14-602-BDTD

Title: BARRIERGUARD 800 - SYSTEM DRAWINGS
ABSORB CRASH CUSHION DETAIL

ISO A3 Landscape | DO NOT SCALE | SHEET 8 OF 17

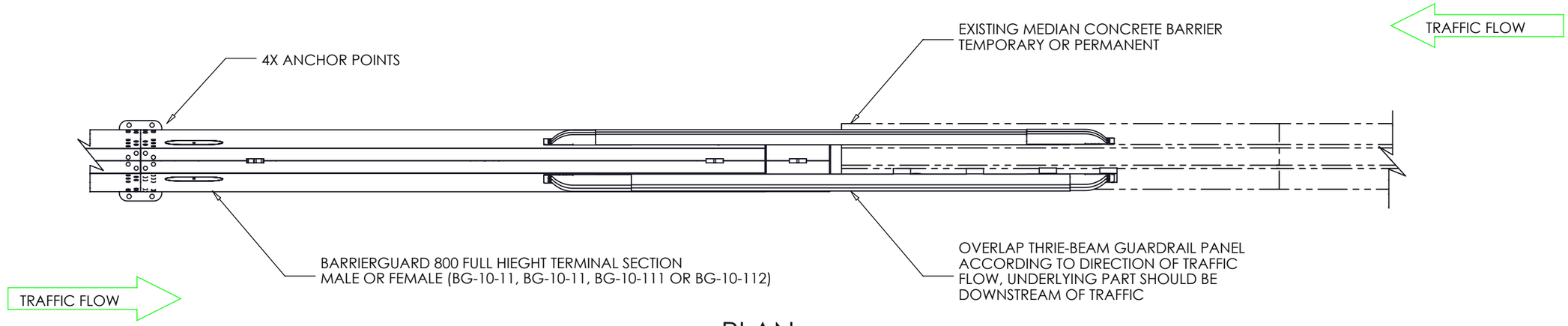

PLAN

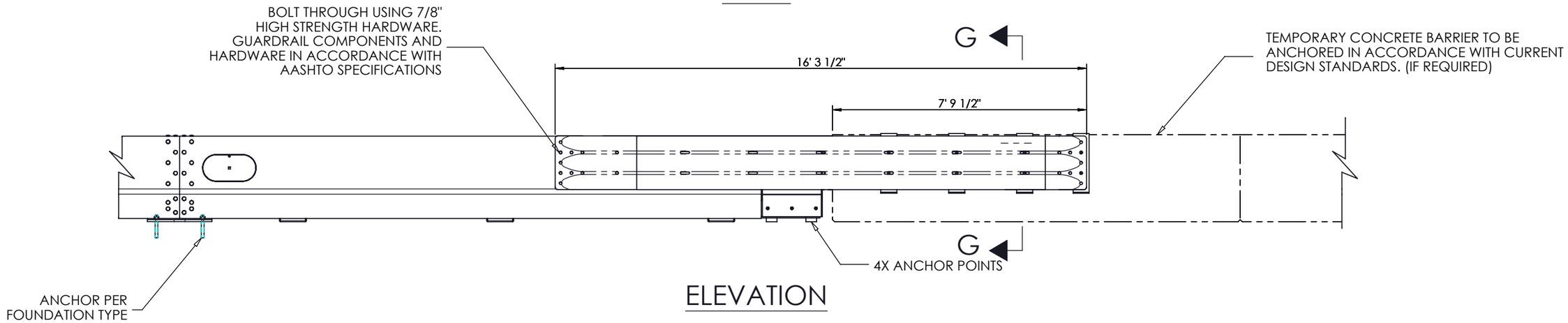

ELEVATION

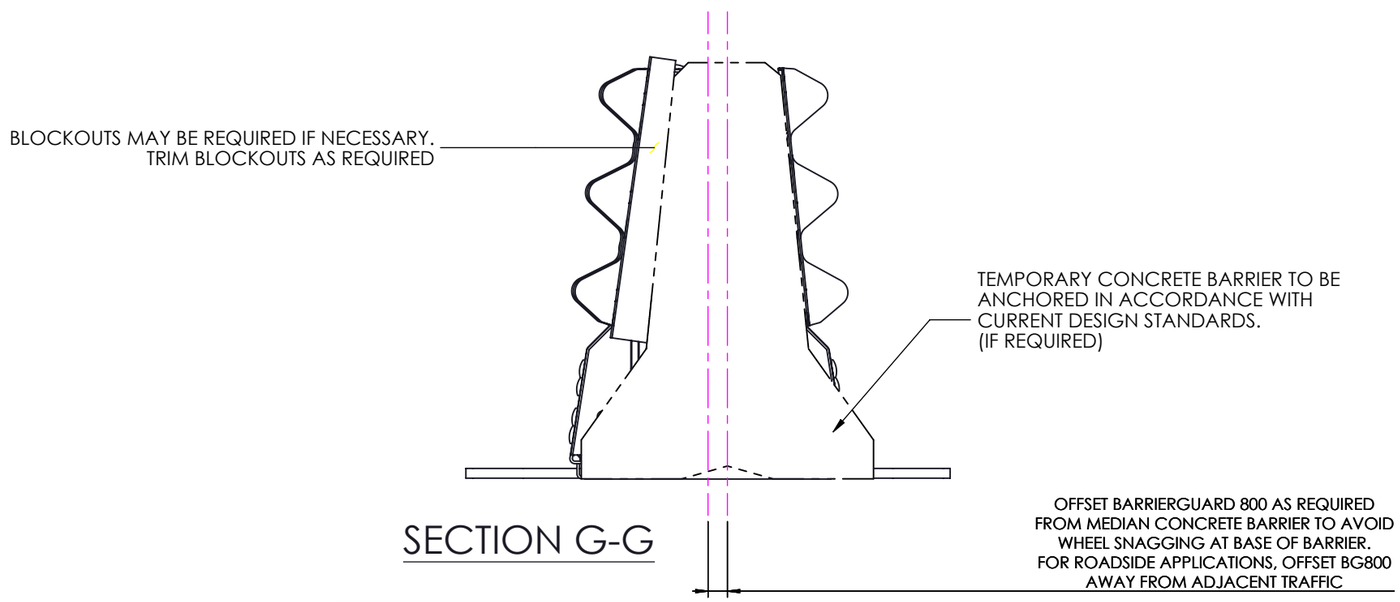

SECTION G-G

7 / 24 / 2014

Ensure drawing is the correct issue and release before using.

The Highlands
Detling Hill
Detling
Maidstone
Kent ME14 3HT
Tel. +44 (0) 1622 734215
Fax. +44 (0) 1622 735106
www.highwaycare.co.uk

Highway Care Ltd

The information hereon is proprietary to Highway Care Ltd and shall not be disclosed, duplicated or used otherwise, without the express written approval of Highway Care Ltd.

Rev.	Details.	Dwn.	Date.	Ch'k'd	-

PENNDOT DWG NO. 14-602-BDTD

Title BARRIERGUARD 800 - SYSTEM DRAWINGS
THRIE BEAM CONNECTION TO CONCRETE
BARRIER DETAIL

ISO A3 Landscape | DO NOT SCALE | SHEET 9 OF 17

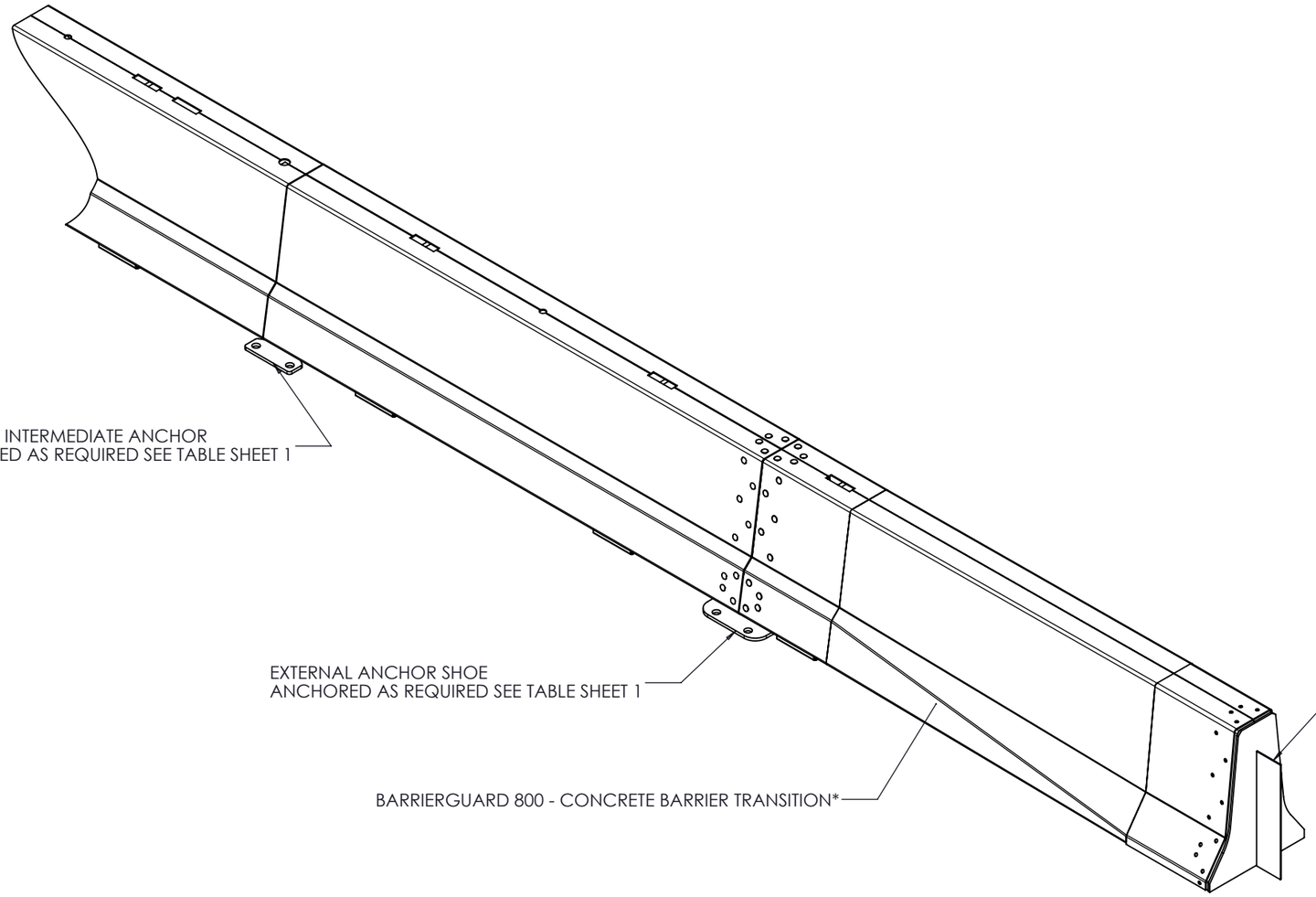

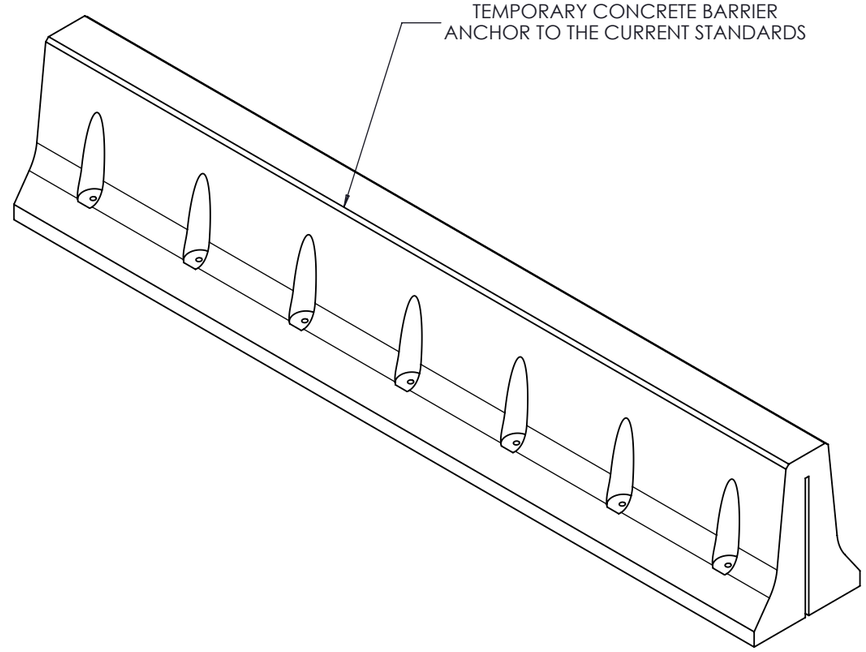

NOTES:
* TRANSITIONS TO ALTERNATIVE BARRIERS ARE AVAILABLE
CONTACT HIGHWAY CARE LTD FOR DETAILS.

7 / 24 / 2014

Ensure drawing is the correct issue and release before using.

The Highlands
Detling Hill
Detling
Maidstone
Kent ME14 3HT
Tel. +44 (0) 1622 734215
Fax. +44 (0) 1622 735106
www.highwaycare.co.uk

Highway Care Ltd

The information hereon is proprietary to Highway Care Ltd and shall not be disclosed, duplicated or used otherwise, without the express written approval of Highway Care Ltd.

Rev.	Details.	Dwn.	Date.	Ch'k'd	-

PENNDOT DWG NO. 14-602-BDTD

Title BARRIERGUARD 800 - SYSTEM DRAWINGS
ALTERNATIVE CONNECTION TO PENNDOT
CONCRETE BARRIER DETAIL

ISO A3 Landscape | DO NOT SCALE | SHEET 10 OF 17

REVERSABLE TRAFFIC FLOW

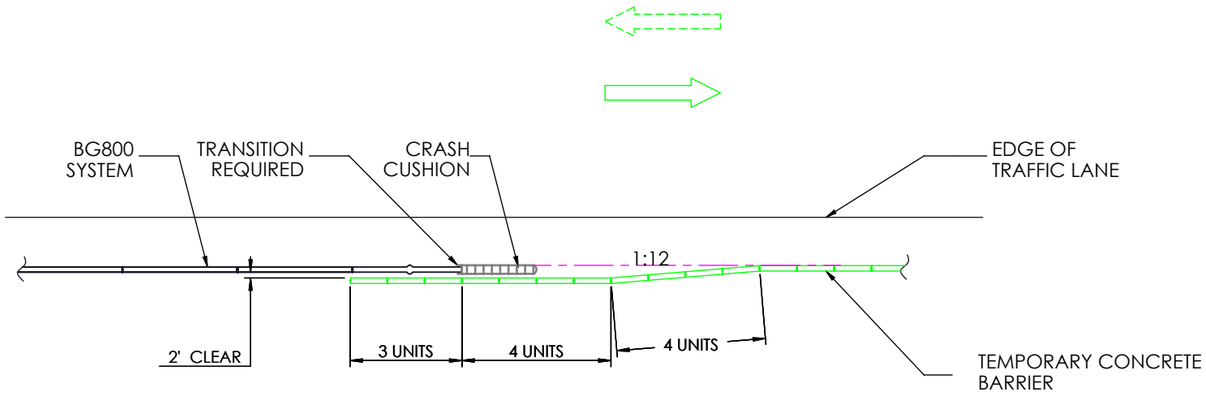

45 MPH OR LESS

ONE DIRECTION TRAFFIX FLOW

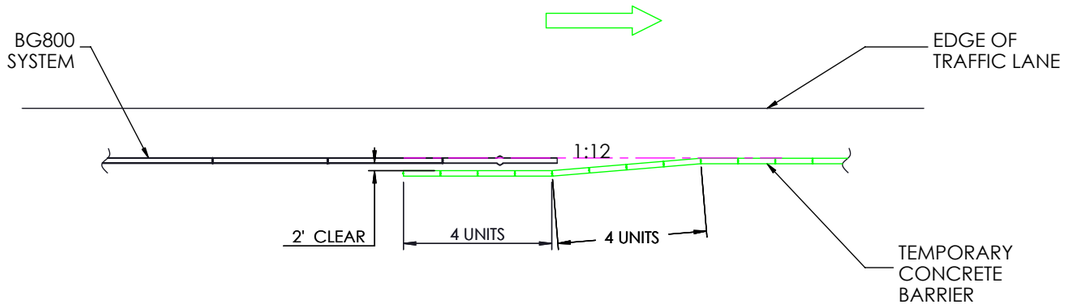

45 MPH OR LESS

REVERSABLE TRAFFIC FLOW

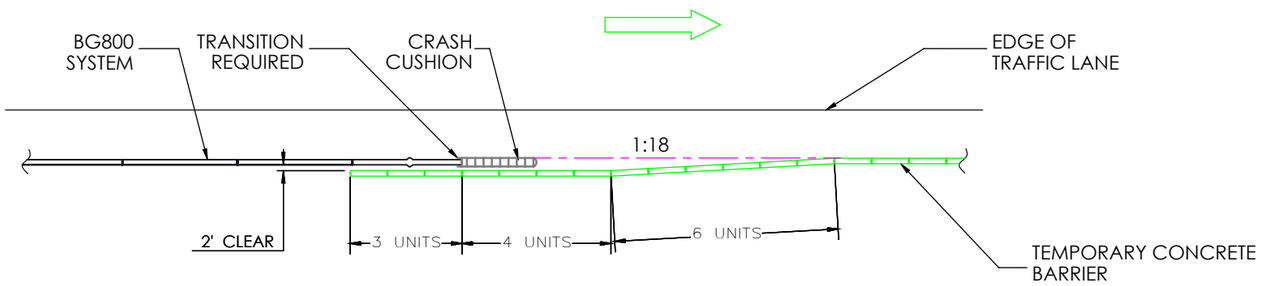

50 MPH OR GREATER

ONE DIRECTION TRAFFIC FLOW

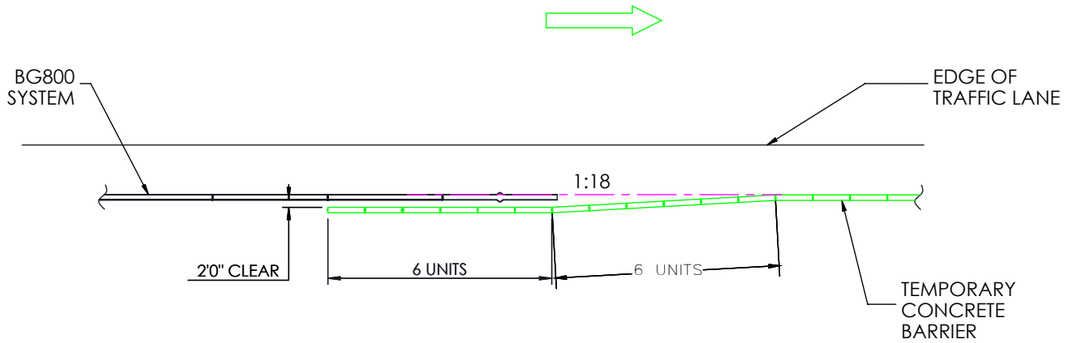

50 MPH OR GREATER

SHOULDER BARRIER ON UNDIVIDED FACILITIES

SHOULDER BARRIER ON DIVIDED FACILITIES

7 / 24 / 2014

Ensure drawing is the correct issue and release before using.

The Highlands
Detling Hill
Detling
Maidstone
Kent ME14 3HT
Tel. +44 (0) 1622 734215
Fax. +44 (0) 1622 735106
www.highwaycare.co.uk

Highway Care Ltd

The information hereon is proprietary to Highway Care Ltd and shall not be disclosed, duplicated or used otherwise, without the express written approval of Highway Care Ltd.

Rev.	Details.	Dwn.	Date.	Ch'k'd	-

PENNDOT DWG NO. 14-602-BDTD

Title BARRIERGUARD 800 - SYSTEM DRAWINGS
NON CONNECTION LAYOUT DETAILS

ISO A3 Landscape	DO NOT SCALE	SHEET 11 OF 17

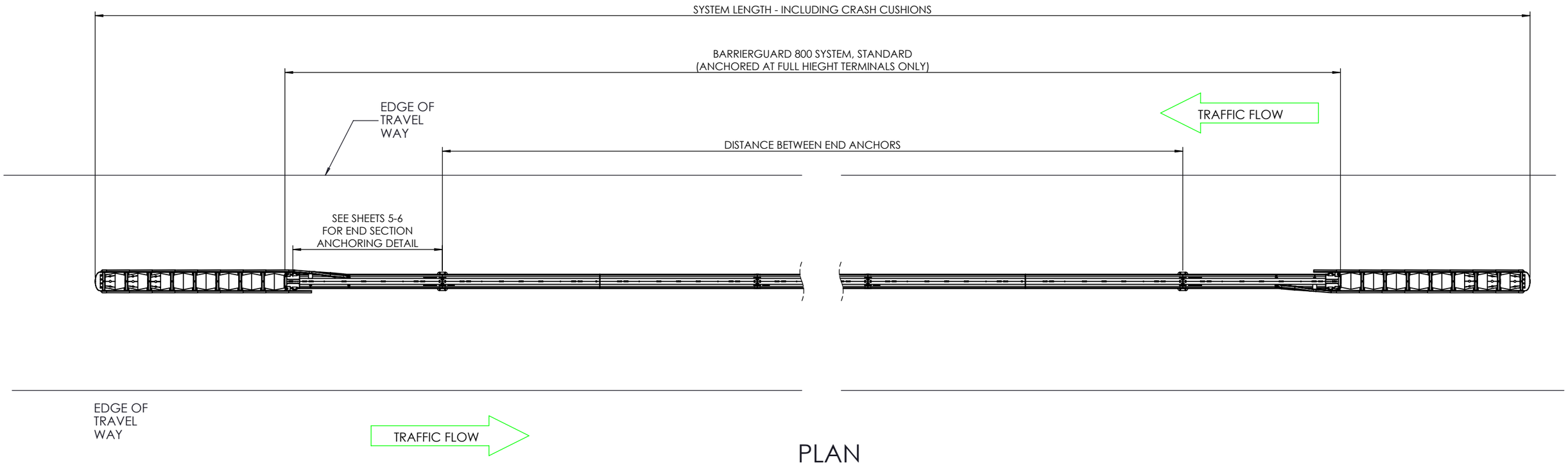

PLAN

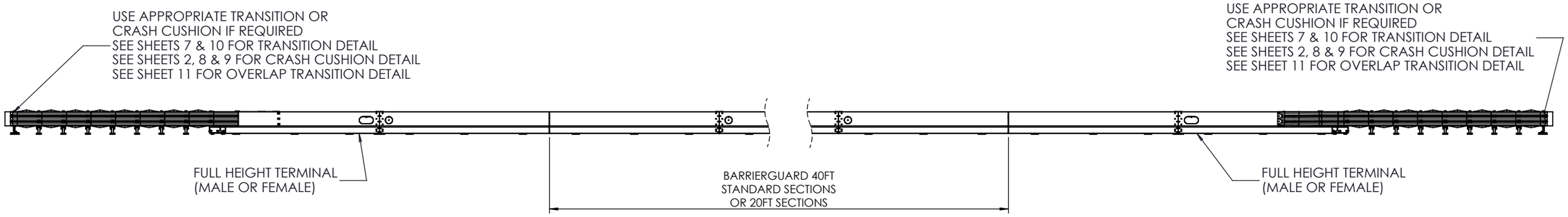

ELEVATION

7 / 24 / 2014

Ensure drawing is the correct issue and release before using.

The Highlands
Detling Hill
Detling
Maidstone
Kent ME14 3HT
Tel. +44 (0) 1622 734215
Fax. +44 (0) 1622 735106
www.highwaycare.co.uk

Highway Care Ltd

The information hereon is proprietary to Highway Care Ltd and shall not be disclosed, duplicated or used otherwise, without the express written approval of Highway Care Ltd.

Rev.	Details.	Dwn.	Date.	Ch'k'd	-

PENNDOT DWG NO. 14-602-BDTD

Title BARRIERGUARD 800 - SYSTEM DRAWINGS
STANDARD SYSTEM BI-DIECTIONAL GENERAL ARRANGEMENT

ISO A3 Landscape | DO NOT SCALE | SHEET 12 OF 17

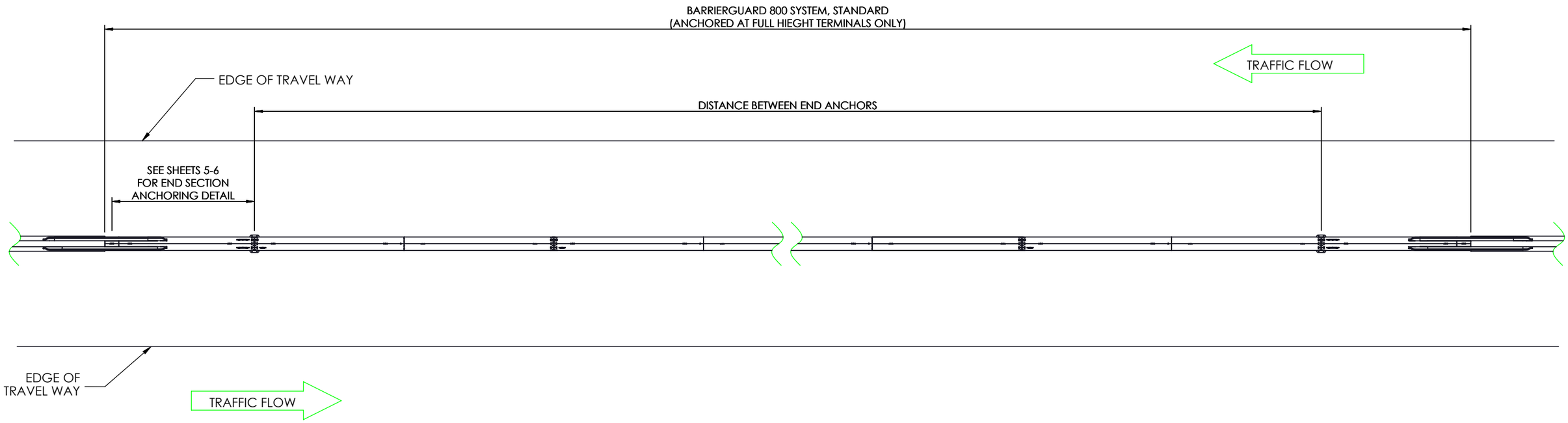

PLAN

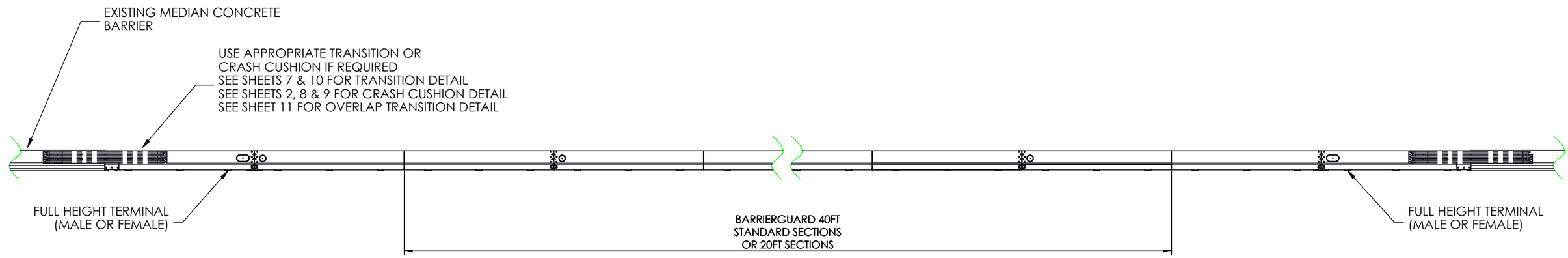

ELEVATION

BARRIERGUARD 800 STANDARD SYSTEM, MEDIAN APPLICATION

7 / 24 / 2014

Ensure drawing is the correct issue and release before using.

The Highlands
Detling Hill
Detling
Maidstone
Kent ME14 3HT
Tel. +44 (0) 1622 734215
Fax. +44 (0) 1622 735106
www.highwaycare.co.uk

Highway Care Ltd

The information hereon is proprietary to Highway Care Ltd and shall not be disclosed, duplicated or used otherwise, without the express written approval of Highway Care Ltd.

Rev.	Details.	Dwn.	Date.	Ch'k'd	-

PENNDOT DWG NO. 14-602-BDTD

Title BARRIERGUARD 800 - SYSTEM DRAWINGS STANDARD SYSTEM MEDIAN INFILL GENERAL ARRANGEMENT

ISO A3 Landscape | DO NOT SCALE | SHEET 13 OF 17

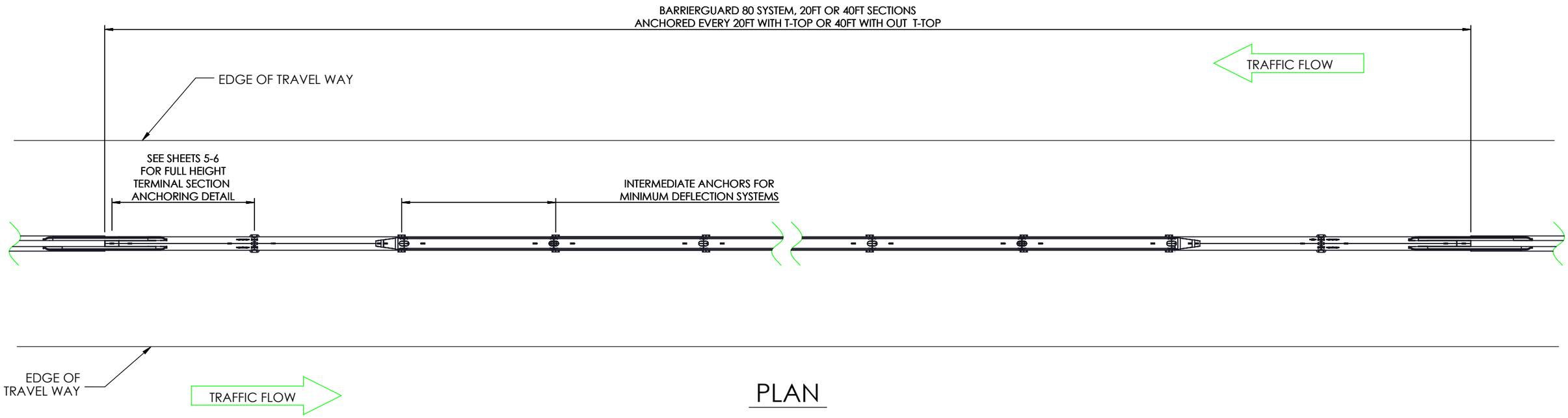

PLAN

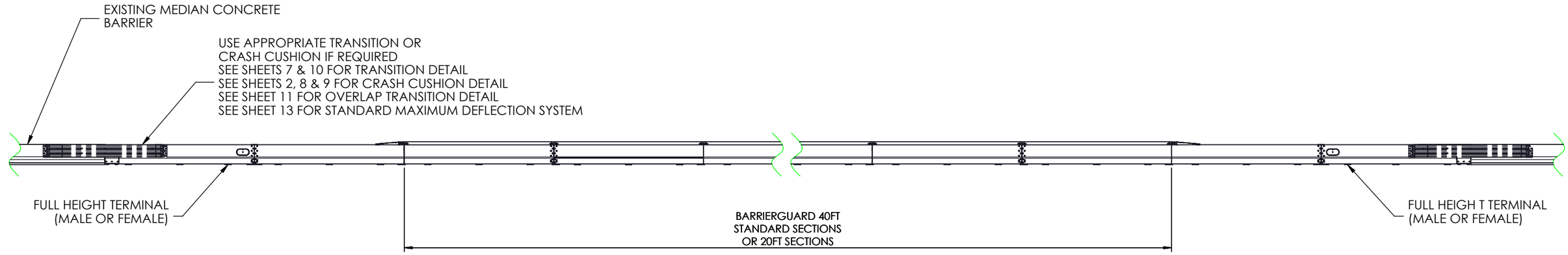

ELEVATION

BARRIERGUARD 800 MINIMUM DEFLECTION SYSTEM, MEDIAN APPLICATION

(ANCHORED EVERY 20FT OR 40FT - DEPENDING ON MAXIMUM ALLOWABLE DEFLECTION)

7 / 24 / 2014

Ensure drawing is the correct issue and release before using.

The Highlands
Detling Hill
Detling
Maidstone
Kent ME14 3HT
Tel. +44 (0) 1622 734215
Fax. +44 (0) 1622 735106
www.highwaycare.co.uk

Highway Care Ltd

The information hereon is proprietary to Highway Care Ltd and shall not be disclosed, duplicated or used otherwise, without the express written approval of Highway Care Ltd.

Rev.	Details.	Dwn.	Date.	Ch'k'd	-

PENNDOT DWG NO. 14-602-BDTD

Title BARRIERGUARD 800 - SYSTEM DRAWINGS MDS SYSTEM MEDIAN INFILL GENERAL ARRANGEMENT

ISO A3 Landscape | DO NOT SCALE | SHEET 14 OF 17

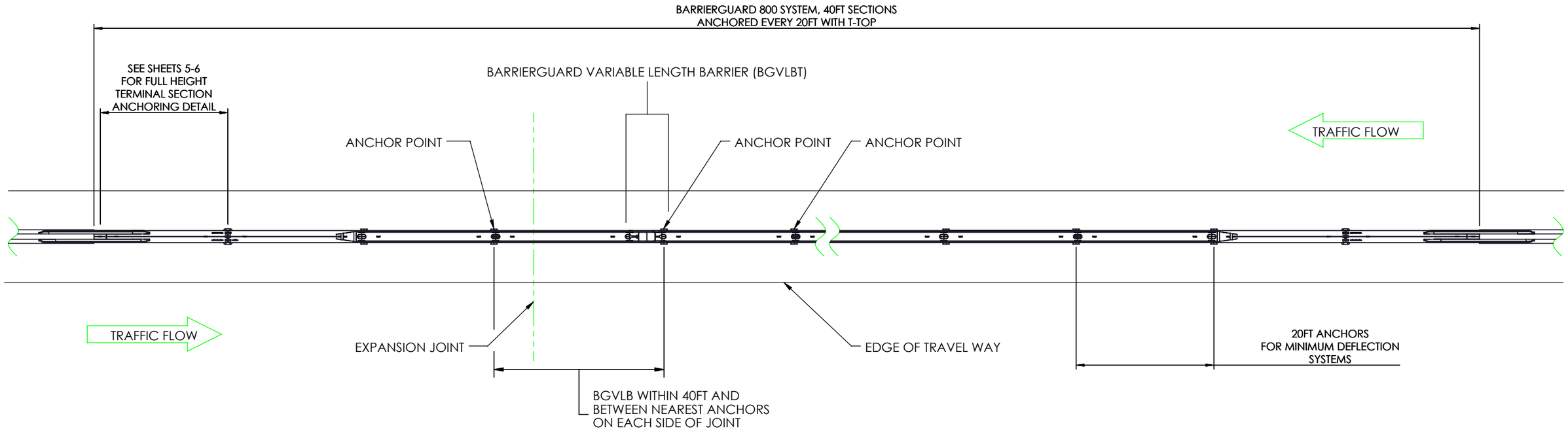

PLAN

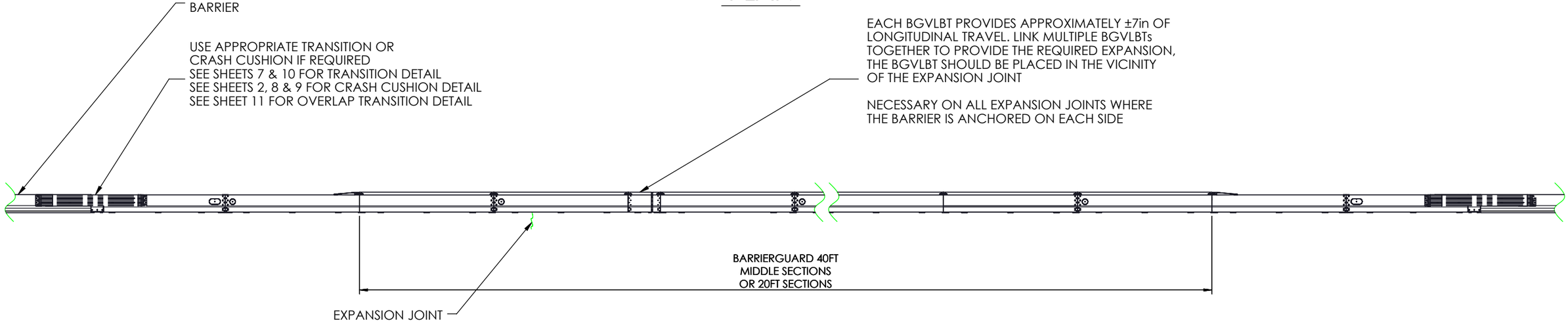

ELEVATION

BARRIERGUARD 800 MINIMUM DEFLECTION SYSTEM WITH BARRIERGUARD VARIABLE LENGTH BARRIER (BGVLBT) FOR APPLICATIONS WITH EXISTING EXPANSION JOINT

7 / 24 / 2014

Ensure drawing is the correct issue and release before using.

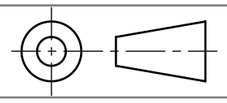

The Highlands
Detling Hill
Detling
Maidstone
Kent ME14 3HT
Tel. +44 (0) 1622 734215
Fax. +44 (0) 1622 735106
www.highwaycare.co.uk

Highway Care Ltd

The information hereon is proprietary to Highway Care Ltd and shall not be disclosed, duplicated or used otherwise, without the express written approval of Highway Care Ltd.

Rev.	Details.	Dwn.	Date.	Ch'k'd	-

PENNDOT DWG NO. 14-602-BDTD

Title BARRIERGUARD 800 - SYSTEM DRAWINGS MDS SYSTEM MEDIAN INFILL GENERAL ARRANGEMENT INCLUDING VLB

ISO A3 Landscape | DO NOT SCALE | SHEET 15 OF 17

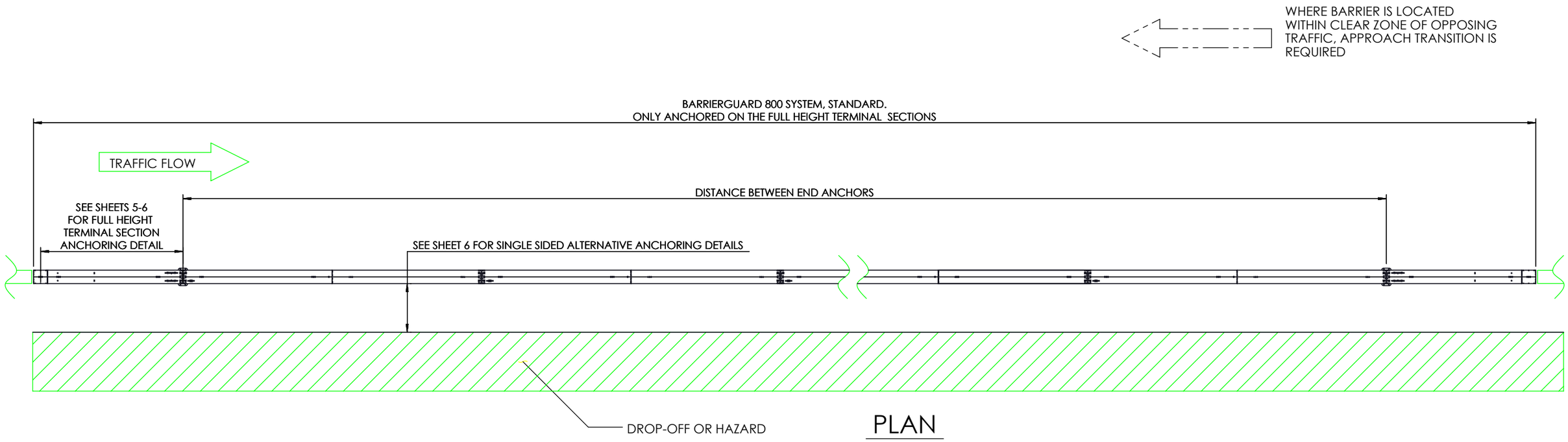

PLAN

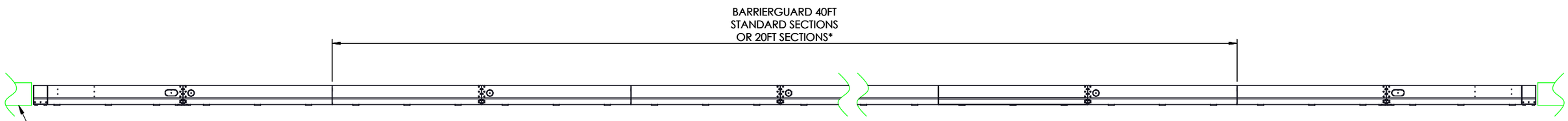

A CRASH CUSHION OR APPROPRIATE TRANSITION OF OTHER MEANS OF PROTECTION SHOULD BE INSTALLED AT END OF BARRIERGUARD 800 SYSTEM, DIRECTLY IN FRONT OF ONCOMING TRAFFIC. CRASH CUSHION SHOULD BE INSTALLED ON BOTH ENDS OF SYSTEM LOCATED BETWEEN BIDIRECTIONAL TRAFFIC OR APPROPRIATE TRANSITION APPLIED.

ELEVATION

BARRIERGUARD 800 STANDARD SYSTEM, ROAD SIDE NEXT TO DROP-OFF OR HAZARD

7 / 24 / 2014

Ensure drawing is the correct issue and release before using.

The Highlands
Detling Hill
Detling
Maidstone
Kent ME14 3HT
Tel. +44 (0) 1622 734215
Fax. +44 (0) 1622 735106
www.highwaycare.co.uk

Highway Care Ltd

The information hereon is proprietary to Highway Care Ltd and shall not be disclosed, duplicated or used otherwise, without the express written approval of Highway Care Ltd.

Rev.	Details.	Dwn.	Date.	Ch'k'd	-

PENNDOT DWG NO. 14-602-BDTD

Title BARRIERGUARD 800 - SYSTEM DRAWINGS STANDARD SYSTEM VERGE GENERAL ARRANGEMENT

ISO A3 Landscape | DO NOT SCALE | SHEET 16 OF 17

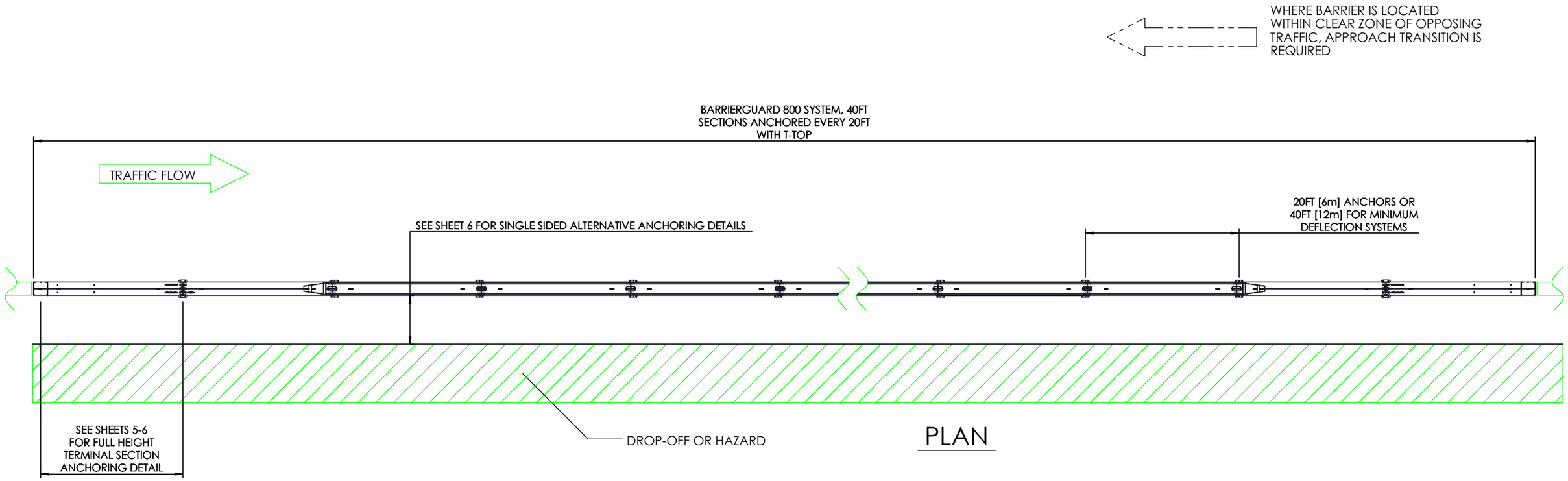

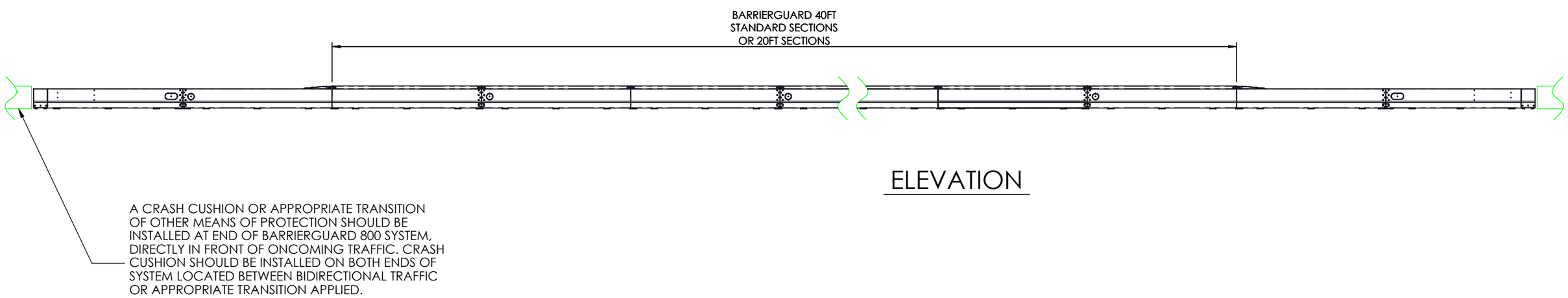

BARRIERGUARD 800 MINIMUM DEFLECTION SYSTEM, ROAD SIDE NEXT TO DROP-OFF OR HAZARD

7 / 24 / 2014

Ensure drawing is the correct issue and release before using.

The Highlands
Detling Hill
Detling
Maidstone
Kent ME14 3HT
Tel. +44 (0) 1622 734215
Fax. +44 (0) 1622 735106
www.highwaycare.co.uk

Highway Care Ltd

The information hereon is proprietary to Highway Care Ltd and shall not be disclosed, duplicated or used otherwise, without the express written approval of Highway Care Ltd.

Rev.	Details.	Dwn.	Date.	Ch'k'd	-

PENNDOT DWG NO. 14-602-BDTD

Title: BARRIERGUARD 800 - SYSTEM DRAWINGS
MDS SYSTEM VERGE GENERAL ARRANGEMENT

ISO A3 Landscape | DO NOT SCALE | SHEET 17 OF 17

Product:

Item 9000-7023 – Folded Steel Plate Girder System
CDR Bridge Systems, LLC
PennDOT Drawing # 14-604-BDTD (REV. 1)

Approval Date:	**Initiated By SOL:**
September 2, 2014	483-14-07
Revision 1 – September 19, 2019	483-19-03

Application/Use:

Folded Steel Plate Girder System manufactured by CDR Bridge Systems, LLC, Pittsburg, Pennsylvania has been approved to be used as an "Alternate" to bridge or culvert systems.

This Folded Steel Plate Girder System is covered under U.S. Patent Number 7,627,921. Folded Steel Plate Girder System is permitted for NHS systems. District Executives may permit the use of this Folded Steel Plate Girder System as an "Alternate" on a project-by-project basis.

Folded Steel Plate Girder System is limited to the following applications as prototype installations:

- Span length: 20 feet to 59 feet
- Skew angle: 45 degrees to 90 degrees
- Structure configuration: Simple Span
- Roadways with ADTT less than 500

The Folded Steel Plate Girder System is to be designed/analyzed to meet both AASHTO and Design Manual, Part 4 design criteria. A Load Rating Table and Rating Procedure must be incorporated on the Contract Drawings. Contact CDR Bridge Systems, LLC, Pittsburgh, Pennsylvania for design and/or analysis questions.

Specifications:

Design/Material/Construction Specifications for this arch system are specified on PennDOT Drawing #14-604-BDTD (REV. 1) dated 9/19/2019 of Folded Steel Plate Girder System for your use.

Comment:

On those projects permitting the use of this system as an alternate, a special provision should be included in the proposal to indicate that the "Folded Steel Plate Girder System" as an alternate is allowed.

PLOTTED: 4/8/2019
8:00:35 AM

STANDARD DETAILS

FOLDED STEEL PLATE GIRDER SYSTEM™

DESIGN SPECIFICATIONS

1.0 USE AND LIMITATIONS

CDR BRIDGE SYSTEMS, LLC TAKES FULL RESPONSIBILITY FOR ENGINEERING THEORY AND CALCULATION CORRECTNESS AND ENSURING THAT ALL DESIGN ASSUMPTIONS ARE VALIDATED IN THE CONTRACT DOCUMENTS EITHER BY NEEDED DETAILS OR CONSTRUCTION SPECIFICATIONS.

CDR BRIDGE SYSTEMS, LLC IS TO PREPARE DESIGN CALCULATIONS AND CONTRACT DRAWINGS FOR THE FOLDED STEEL PLATE GIRDER SYSTEM™ IN ACCORDANCE WITH THE GUIDELINES SPECIFIED HEREIN. THE FOLDED STEEL PLATE GIRDER DESIGN PARAMETERS AND OTHER LIMITATIONS ARE AS PER MANUFACTURER'S DESIGN SPECIFICATIONS PREPARED BY CDR BRIDGE SYSTEMS, LLC FOR THE FOLDED STEEL PLATE GIRDER SYSTEM™ (D.L. CLARK BUILDING, SUITE 610, 503 MARTINDALE STREET, PITTSBURGH, PA 15212), AND PENNSYLVANIA DEPARTMENT OF TRANSPORTATION DESIGN MANUAL, PART 4.

SECURE THE DISTRICT BRIDGE ENGINEER'S APPROVAL BEFORE INCORPORATING THE FOLDED STEEL PLATE GIRDER SYSTEM™ INTO ANY PROJECT. UPON DISTRICT BRIDGE ENGINEER APPROVAL, THE FOLDED STEEL PLATE GIRDER SYSTEM™ MAY BE SPECIFIED FOR USE AS A CONTRACTOR ALTERNATE.

2.0 TECHNICAL INFORMATION

THE FOLDED STEEL PLATE GIRDER SYSTEM™ CONSISTS OF A COLD BENT STEEL PLATE GIRDER WITH A PRECAST COMPOSITE CONCRETE DECK PANEL AS SHOWN IN THE FOLLOWING DRAWINGS.

THE FOLDED STEEL PLATE GIRDER SYSTEM™ IS ACCEPTABLE FOR USE IN ACCELERATED BRIDGE CONSTRUCTION AND CONVENTIONAL CONSTRUCTION.

THE FOLDED STEEL PLATE GIRDER SYSTEM™ MAY BE USED ON ANY EXISTING OR PROPOSED SUBSTRUCTURE TYPES. APPROACH SLABS CAN BE ACCOMMODATED.

THE FOLDED STEEL PLATE GIRDER SYSTEM™ MAY BE USED FOR SPAN LENGTHS BETWEEN 20 FT. AND 59 FT. AND BRIDGE SKEWS BETWEEN 45° AND 90°. SEE SHEET NO. 5 FOR ADDITIONAL INFORMATION.

THE MAXIMUM C/C GIRDER SPACING IS LIMITED TO 11'-4" DUE TO 12'-0" LANE WIDTH FOR SHIPPING. HOWEVER, GREATER GIRDER SPACING CAN BE ACCOMMODATED IF DECK SLAB IS PRECAST ON SITE. FOR ON SITE CASTING, SUBMIT A QC PLAN TO PENNDOT FOR REVIEW AND ACCEPTANCE. ALLOW A MINIMUM OF 15 DAYS FOR PENNDOT REVIEW.

THE DESIGN IS APPLICABLE FOR SIMPLY SUPPORTED SPANS ONLY. THE DESIGN IS APPLICABLE FOR BOTH CONVENTIONAL ABUTMENTS AND INTEGRAL ABUTMENTS.

THE TRAPEZOIDAL SHAPED GIRDER IS ESSENTIALLY A BOX SECTION. INTERMEDIATE STIFFENERS, DIAPHRAGMS, OR CROSS FRAMES ARE NOT REQUIRED.

ELEVEN (11) STANDARD FOLDED STEEL PLATE GIRDER DESIGNATIONS WITH BOTH A ⅜" AND ½" PLATE THICKNESS ARE AVAILABLE FOR USE. INDIVIDUAL PLATE DIMENSIONS MAY BE MODIFIED BY CDR BRIDGE SYSTEMS, LLC AS REQUIRED BY DESIGN.

THE COMPOSTIE GIRDER IS COMPACT. THE TOP FLANGE OF THE NON-COMPOSITE GIRDER IS A NON-COMPACT SLENDER ELEMENT.

BRIDGE BARRIERS IN ACCORDANCE WITH THE PENNDOT BD-600M AND BC-700 SERIES STANDARD DRAWINGS CAN BE ACCOMMODATED.

BEARING STIFFENERS, BEARINGS, CONCRETE END DIAPHRAGMS, DECK SLAB DESIGN AND DETAILS, BARRIERS, MISCELLANEOUS STEEL DETAILS, APPROACH SLAB DETAILS, AND WATERPROOFING DETAILS ARE IN ACCORDANCE WITH THE PENNDOT BD-600M AND BC-700 SERIES STANDARD DRAWINGS.

FLANGE SEPARATORS ARE USED FOR BRACING OF THE BOTTOM FLANGES.

SHOP WELDING OF THE GIRDERS IS NOT REQUIRED FOR GIRDER FABRICATION.

CREATE GIRDERS FROM A SINGLE PLATE THROUGH COLD FORMING PROCESS. BULLETIN 15 MACHINE SHOP OR AISC AND DEPARTMENT REGISTER OF CERTIFIED PLANT IS REQUIRED FOR FORMING PLATE.

INSIDE RADIUS USED FOR COLD BENDING IS 5 TIMES THE GIRDER PLATE THICKNESS.

STRUCTURAL STEEL FOR GIRDERS IS ASTM A709/A709M, GRADE 50. ALL STRUCTURAL STEEL SHALL BE HOT DIP GALVANIZED.

DUE TO COLD BENDING, THE GIRDERS CANNOT BE CAMBERED. DEAD LOAD DEFLECTION, VERTICAL CURVE, AND CROSS SLOPE SHALL BE ACCOMMODATED IN THE GIRDER HAUNCH.

RAISED SIDEWALKS ARE NOT CONSIDERED FOR THE DESIGN.

3.0 GENERAL DESIGN

SUBMIT HARD COPIES OR AN ELECTRONIC COPY OF CONSTRUCTION DRAWINGS AND DESIGN CALCULATIONS FOR THE FOLDED STEEL PLATE GIRDER SYSTEM™ TO THE DISTRICT BRIDGE ENGINEER FOR REVIEW AND APPROVAL.

ON THE FIRST SHEET OF THE CONSTRUCTION DRAWINGS AND DESIGN CALCULATIONS, PROVIDE A PROFESSIONAL ENGINEER'S SEAL, LICENSED IN THE COMMONWEALTH OF PENNSYLVANIA, A VALID SIGNATURE IN INK, A BUSINESS NAME AND ADDRESS, AND THE DATE.

ON THE FIRST SHEET OF THE CONSTRUCTION DRAWINGS, INCLUDE THE FOLLOWING STATEMENT PLACED ABOVE THE PROFESSIONAL ENGINEER'S SEAL: "ALL DESIGN ASSUMPTIONS ARE VALIDATED THROUGH EITHER NOTES TO THE CONTRACTOR OR DETAILS ON THESE DRAWINGS."

THE DESIGN IS IN ACCORDANCE WITH THE AASHTO LRFD BRIDGE DESIGN SPECIFICATIONS, 7TH EDITION, 2014, AND AS SUPPLEMENTED BY DESIGN MANUAL, PART 4 (INCLUDING LATEST REVISIONS, APRIL 2015).

IN THE EVENT THAT CERTAIN DESIGN PARAMETERS OR SPECIFICATIONS ARE IN CONFLICT, THE FOLLOWING ORDER OF PRECEDENCE GOVERNS:

A) DESIGN REQUIREMENTS LISTED IN "SPECIAL DRAWINGS AND SPECIAL DESIGN REQUIREMENTS" OF THE SPECIAL PROVISIONS.
B) PENNDOT DESIGN MANUAL, PART 4 (INCLUDING LATEST REVISIONS, APRIL 2015).
C) PENNDOT STANDARD DRAWINGS, CURRENT VERSIONS.
D) AASHTO LRFD BRIDGE DESIGN SPECIFICATIONS, 7TH EDITION, 2014.
E) IN THE EVENT THAT A CLEAR ORDER OF PRECEDENCE CANNOT BE ESTABLISHED, OR A DIFFERENCE IN INTERPRETATION OF THE DESIGN CANNOT BE RESOLVED, THE CHIEF BRIDGE ENGINEER WILL PROVIDE THE ORDER OF PRECEDENCE TO BE USED.

LIVE LOAD DISTRIBUTION TO GIRDERS IS BASED UPON THE DM-4 DISTRIBUTION FACTOR METHOD. DISTRIBUTION FACTORS ARE CALCULATED FOR BOTH STEEL MULTI-GIRDERS AND OPEN STEEL BOX GIRDERS. THE CONTROLLING DISTRIBUTION FACTORS ARE USED FOR DESIGN.

DESIGN IS IN ACCORDANCE WITH THE LRFD METHOD.

DESIGN LIVE LOADS:

PHL-93 OR P-82 (204 KIP PERMIT LOAD)

FATIGUE DESIGN IS BASED ON THE FOLLOWING:
STEEL STRUCTURES: DESIGN YEAR ADTT (ONE DIRECTIONAL)

DESIGN DEAD LOADS:

INCLUDES SURFACE AREA DENSITY OF 0.030 KSF FOR FUTURE WEARING SURFACE ON THE DECK SLAB.

INCLUDES OPTIONAL 0.015 KSF FOR S.I.P. FORMS.

INCLUDES PROVISIONS FOR UTILITIES, EPOXY OVERLAY, AND/OR LATEX MODIFIED CONCRETE (LMC) OVERLAY.

DESIGN PARAMETERS:

CAST-IN-PLACE DECK SLAB: f'c = 4 ksi (MIN.)
CAST-IN-PLACE DIAPHRAGM: f'c = 3.5 ksi (MIN.)
BARRIER: f'c = 3.5 ksi (MIN.)
STRUCTURAL STEEL: Fy = 50 ksi
REINFORCING STEEL: Fy = 60 ksi

USE f'c = 5 KSI MIN FOR PRECAST CONCRETE DECK PANELS. USE OF CLASS AAAP CEMENT CONCRETE IS NOT REQUIRED FOR PRECAST DECK PANELS.

HAUNCH AND BARRIER ARE EXCLUDED FROM THE COMPOSITE GIRDER SECTION PROPERTIES.

DECK SLAB THICKNESS INCLUDES A ½ IN. INTEGRAL WEARING SURFACE, BUT EXCLUDES OVERLAYS. AN OVERLAY CAN BE SUBSTITUTED IN PLACE OF THE INTEGRAL WEARING SURFACE.

PROVIDE STRUCTURAL STEEL CONFORMING TO AASHTO M 270/M 270M, GRADE 50 (ASTM A 709/A 709M, GRADE 50) DESIGNATION, EXCEPT WHEN NOTED OTHERWISE. ALL STRUCTURAL STEEL SHALL BE HOT DIP GALVANIZED.

ALL STRUCTURAL STEEL HARDWARE SHALL BE EITHER HOT DIP GALVANIZED OR MECHANICALLY GALVANIZED:

HIGH STRENGTH BOLTS: ASTM F3125, GRADE A325, TYPE 1 (MECHANICALLY GALVANIZED)

ANCHOR BOLTS: ASTM F1554, GRADE 55 (HOT DIP GALVANIZED)

NUTS: ASTM A563/A563M, GRADE DH (MECHANICALLY GALVANIZED)

WASHERS: ASTM F436/F436M, TYPE 1 (MECHANICALLY GALVANIZED)

SEPARATOR PLATES SHALL BE SPACED BY DESIGN.

4.0 STRUCTURAL DESIGN

APPROXIMATE METHOD USING GIRDER TABLES:

DETERMINE DISTRIBUTION FACTORS, DEAD LOADS, AND LIVE LOADS BY HAND CALCULATION OR BY USING STLRFD FOR A GIVEN C/C BEAM SPACING, OVERHANG WIDTH, SPAN LENGTH, AND SKEW.

SELECT APPLICABLE FOLDED STEEL PLATE GIRDER DESIGNATIONS FROM THE GIRDER TABLE DRAWINGS BASED ON MINIMUM REQUIRED NON-COMPOSITE AND COMPOSITE SECTION PROPERTIES, NOMINAL MOMENT CAPACITY, AND GIRDER DEPTH.

VERIFY GIRDER STRESSES AT THE STRENGTH AND SERVICE LIMIT STATES AND LIVE LOAD DEFLECTION.

CALCULATE INVENTORY AND OPERATING RATINGS FOR ALL LIVE LOADS.

ALTERNATIVELY, INPUT THE "EQUIVALENT PLATE GIRDER FOR STLRFD" FROM THE GIRDER TABLE DRAWINGS INTO STLRFD AND RERUN THE ANALYSIS.

ANALYSIS PROCEDURE:

ASSUME C/C GIRDER SPACING AND OVERHANG WIDTH FOR A GIVEN SPAN LENGTH AND SKEW.

CALCULATE DISTRIBU
DESIGN MANUAL, PAR
MULTI-GIRDERS AND
CONTROLLING DISTRI

CALCULATE THE APPL
MOMENT AND SHEAR I

CALCULATE APPLIED MAXIMUM UNFACTORED LIVE LOAD MOMENTS AND SHEARS FOR ALL LIVE LOAD VEHICLES IN ACCORDANCE WITH A 3.6 & D 3.6.

FACTOR DEAD AND LIVE LOADS INTO LOAD COMBINATIONS PER A 3.4 & D 3.4.

CALCULATE NON-COMPOSITE AND COMPOSITE GIRDER SECTION PROPERTIES.

CALCULATE THE FLEXURAL AND SHEAR RESISTANCE OF THE NON-COMPOSITE GIRDER SECTION PER A 6.12.2.2.2. AND A 6.10.3.3.

CALCULATE THE FLEXURAL AND SHEAR RESISTANCE OF THE COMPOSITE GIRDER SECTION PER A 6.10.7.1.2, A 6.10.9 AND A 6.11.9.

CHECK THE UNCURED DECK SLAB STRESS ON THE NON-COMPOSITE GIRDER PER A 6.10.3.2 AND A 6.10.3.3.

CHECK THE MOMENT AND SHEAR RESISTANCE OF THE COMPOSITE SECTION FOR THE STRENGTH LIMIT STATE PER A 6.10.6.2.2, A 6.10.7.1, A 6.10.7.3 AND A 6.11.9.

CHECK ELASTIC LIVE LOAD DEFLECTION PER D 2.5.2.6.2.

CHECK PERMANENT DEFORMATIONS PER A 6.10.4.2.

CHECK FATIGUE PER A 6.6.1 AND D 6.6.1.

DESIGN SHEAR CONNECTORS PER A 6.10.10 AND D 6.10.10.

CALCULATE LIVE LOAD RATINGS.

DESIGN BEARING STIFFENERS PER A 6.10.11.2 AND D 6.10.11.2.

DESIGN BEARINGS PER A 14.7.6 AND D 14.7.6.

Mark	Description	By	Chk'd.	Recm'd.	Date
1	VARIOUS UPDATES	RTE	WES		

REVISIONS

THIS DRAWING IS THE PROPERTY OF CDR BRIDGE SYSTEMS, LLC. CDR BRIDGE SYSTEMS, LLC IS A LICENSEE OF THE FOLDED STEEL PLATE GIRDER PATENT. NEITHER THE DRAWING OR REPRODUCTION OF IT NOR INFORMATION DERIVED FROM IT IS TO BE GIVEN TO OTHERS WITHOUT THE EXPRESSED CONSENT OF CDR BRIDGE SYSTEMS, LLC. NO USE IS TO BE MADE OF IT WHICH IS OR MAY BE IN ANY WAY INJURIOUS TO AND/OR CONTRARY TO THE INTERESTS OF CDR BRIDGE SYSTEMS, LLC. CDR BRIDGE SYSTEMS, LLC MAKES NO REPRESENTATION OR WARRANTIES AS TO ANY USE OF THIS DRAWING OTHER THAN THAT OF WHICH CDR BRIDGE SYSTEMS, LLC ORIGINALLY INTENDED. THIS FOLDED STEEL PLATE GIRDER SYSTEM IS COVERED UNDER U.S. PATENT NUMBER 7,627,921

PENNDOT DRAWING #14-604-BDTD (REV.1)

PENNSYLVANIA
DEPARTMENT OF TRANSPORTATION
RECOMMENDED
Thomas P Macioce
CHIEF BRIDGE ENGINEER
9/2/2014

PENNSYLVANIA
DEPARTMENT OF TRANSPORTATION
RECOMMENDED
Thomas P Macioce
CHIEF BRIDGE ENGINEER
9/19/2019

COMMONWEALTH OF PENNSYLVANIA
REGISTERED PROFESSIONAL
ROBERT T. ELLIOTT, JR.
ENGINEER
PE-055773-E

DESIGNER
CDR BRIDGE SYSTEMS
D.L. CLARK BUILDING, SUITE 610
503 MARTINDALE STREET
PITTSBURGH, PA 15212-5746
P: 412-322-0313
F: 412-322-2138
WEB: www.cdrbridges.com

DATE:	04/08/19
SCALE:	NOT TO SCALE
DESIGNED:	RTE
DRAWN:	RTE
CHECKED:	WES
CDR JOB #:	

COMMONWEALTH OF PENNSYLVANIA
DEPARTMENT OF TRANSPORTATION
BUREAU OF PROJECT DELIVERY

CDR BRIDGE SYSTEMS, LLC
FOLDED STEEL PLATE GIRDER SYSTEM

DESIGN SPECIFICATIONS

OPERATOR: Robert.Elliott
FILE PATH: P:\CDR BRIDGE\PROPOSALS\P3672.00-Folded_Steel_Plate_Girder\Design\USTN\PennDOT\01-02 FSPG General Notes.dgn

STANDARD DETAILS

FOLDED STEEL PLATE GIRDER SYSTEM™

CONSTRUCTION SPECIFICATIONS

1.0 GENERAL

PROVIDE MATERIALS AND PERFORM WORK IN ACCORDANCE WITH SPECIFICATIONS, PUBLICATION 408, CURRENT VERSION, AASHTO/AWS D1.5/D1.5: 2008 BRIDGE WELDING CODE, AND THE CONTRACT SPECIAL PROVISIONS.

STEEL AND CONCRETE FABRICATORS MUST BE BULLETIN 15 (PENNDOT PUB. 35) APPROVED.

PROVIDE STRUCTURAL STEEL CONFORMING TO AASHTO M 270/M 270M, GRADE 50 (ASTM A 709/A 709M, GRADE 50) DESIGNATION, EXCEPT WHEN NOTED OTHERWISE. ALL STRUCTURAL STEEL SHALL BE HOT DIP GALVANIZED.

PROVIDE FABRICATED STRUCTURAL STEEL IN ACCORDANCE WITH PUBLICATION 408 SECTION 1050 AND 1105, AS MODIFIED BY THE CONTRACT SPECIAL PROVISIONS.

ALL STRUCTURAL STEEL HARDWARE SHALL BE EITHER HOT DIP GALVANIZED OR MECHANICALLY GALVANIZED:

HIGH STRENGTH BOLTS: ASTM F3125, GRADE A325, TYPE 1 (MECHANICALLY GALVANIZED)

ANCHOR BOLTS: ASTM F1554, GRADE 55 (HOT DIP GALVANIZED)

NUTS: ASTM A563/A563M, GRADE DH (MECHANICALLY GALVANIZED)

WASHERS: ASTM F436/F436M, TYPE 1 (MECHANICALLY GALVANIZED)

PROVIDE 2" CONCRETE COVER ON REINFORCEMENT BARS, EXCEPT AS NOTED.

USE CLASS AAAP CEMENT CONCRETE FOR CAST-IN-PLACE DECK SLABS, FOR FUTURE REDECKING, AND END DIAPHRAGMS.

USE CLASS AA CEMENT CONCRETE IN BARRIERS.

PROVIDE CEMENT CONCRETE IN ACCORDANCE WITH PUBLICATION 408 SECTION 704, 714, AND 1001, AS MODIFIED BY THE CONTRACT SPECIAL PROVISIONS.

ULTRA HIGH PERFORMANCE CONCRETE (UHPC) MIX DESIGN AND CONSTRUCTION SHALL BE IN ACCORDANCE WITH THE UHPC STANDARD SPECIAL PROVISION.

A HIGHER CLASS CONCRETE MAY BE SUBSTITUTED FOR A LOWER CLASS CONCRETE AT NO ADDITIONAL COST TO THE DEPARTMENT, IF APPROVED BY THE DISTRICT BRIDGE ENGINEER.

PROVIDE GRADE 60 REINFORCING STEEL BARS THAT MEET THE REQUIREMENTS OF ASTM A 615/A 615M, A 996/A 996M OR A 706/A 706M. DO NOT WELD GRADE 60 REINFORCING STEEL BARS UNLESS SPECIFIED. DO NOT USE RAIL STEEL A 996/A 996M REINFORCEMENT BARS IN BARRIERS OR WHERE BENDING OR WELDING OF THE REINFORCEMENT BARS IS INDICATED.

USE EPOXY-COATED REINFORCEMENT BARS IN THE DECK SLAB, BARRIERS, AND CONCRETE END DIAPHRAGMS.

GALVANIZED REINFORCING STEEL BARS MAY BE SUBSTITUTED FOR EPOXY-COATED REINFORCING STEEL BARS AT NO ADDITIONAL COST TO THE DEPARTMENT.

RAKE-FINISH ALL HORIZONTAL CONSTRUCTION JOINTS, EXCEPT AS INDICATED.

VERIFY ALL DIMENSIONS AND GEOMETRY OF THE EXISTING OR NEW STRUCTURE IN THE FIELD AS NECESSARY FOR PROPER FIT OF THE PROPOSED CONSTRUCTION.

CONSTRUCT DECK SLAB TRANSVERSE CONSTRUCTION JOINTS PARALLEL TO THE BRIDGE CENTERLINE OF BEARINGS.

CHAMFER EXPOSED CONCRETE EDGES 1 IN. BY 1 IN., EXCEPT AS NOTED.

ALL DIMENSIONS SHOWN ARE HORIZONTAL, EXCEPT AS NOTED.

USE REMOVABLE FORMS TO CONSTRUCT THE DECK SLAB.

DECK SLAB THICKNESS INCLUDES A ½ IN. INTEGRAL WEARING SURFACE, BUT EXCLUDES OVERLAYS. AN OVERLAY CAN BE SUBSTITUTED IN PLACE OF THE INTEGRAL WEARING SURFACE.

SUPERSTRUCTURE DIMENSIONS SHOWN ARE FOR A NORMAL TEMPERATURE OF 68°F.

PROVIDE MINIMUM EMBEDMENT AND SPLICE LENGTHS IN ACCORDANCE WITH STANDARD DRAWING BC-736M, UNLESS OTHERWISE INDICATED.

2.0 NOTES FOR STEEL GIRDERS

SHOP OR FIELD SPLICES WILL NOT BE PERMITTED.

DO NOT USE FORM SUPPORT SYSTEMS THAT WILL CAUSE UNACCEPTABLE OVERSTRESS OR DEFORMATION TO PERMANENT BRIDGE MEMBERS.

ALL FASTENERS ARE ⅞ IN. DIAMETER HS BOLTS, EXCEPT AS NOTED.

PREPARE BEARING AREAS AS SPECIFIED IN PUBLICATION 408, SECTION 1001.3(K)9.

THREADED STUDS FOR THE SUPPORT OF THE OVERHANG DECK FORMING BRACKET ARE PERMITTED PROVIDED THE THREADED STUD IS ATTACHED WITH THE SAME WELDING PROCESS AS THE SHEAR STUDS.

WELDING OF REINFORCEMENT BARS DURING FABRICATION OR CONSTRUCTION IS NOT PERMITTED UNLESS SPECIFIED.

PROVIDE WELDED STUD SHEAR CONNECTORS MANUFACTURED FROM STEEL CONFORMING TO ASTM A 108.

SET ANCHOR BOLTS TO TEMPLATE OR IN PREFORMED HOLES. DO NOT DRILL UNLESS SPECIFICALLY INDICATED ON PLANS. FILL THE PREFORMED HOLES WITH NON-SHRINK GROUT. FILL THE CLEARANCE BETWEEN ANCHOR BOLTS AND HOLES IN MASONRY PLATES WITH APPROVED NON-HARDENING CAULKING COMPOUND CONFORMING TO PUBLICATION 408, SECTION 705.8.

DO NOT PAINT FABRICATED STRUCTURAL STEEL. STRUCTURAL STEEL SHALL BE HOT DIP GALVANIZED.

STABILITY OF PARTIAL GIRDERS AND COMPLETE GIRDER UNITS IS TO BE MAINTAINED BY THE CONTRACTOR DURING ERECTION, UNTIL ALL GIRDER UNITS ARE IN-PLACE AND ALL BOLTS AND CLOSURE POURS ARE PROPERLY INSTALLED. ERECTION LOADS INCLUDING SELF WEIGHT OF THE STEEL MEMBERS AND PRECAST DECK, WIND LOADING, AND CONSTRUCTION LIVE LOADING EFFECTS ARE TO BE EVALUATED BY THE CONTRACTOR FOR STABILITY, STRESSES, AND DEFLECTIONS ON THE STEEL MEMBERS DURING ANY STAGE OF ERECTION.

ALL BEARING STIFFENERS SHALL BE VERTICAL AFTER FINAL ERECTION.

THE GIRDERS ARE NOT DESIGNED TO RESIST ANY TORSIONAL OR LATERAL FORCES DUE TO TEMPORARY CONSTRUCTION LOADS. THE CONTRACTOR MUST PROVIDE ANY TEMPORARY BRACING NECESSARY TO SUPPORT THE GIRDER WEB AND FLANGES AGAINST ALL TORSIONAL OR LATERAL FORCES RESULTING FROM CONSTRUCTION LOADS.

THE CONTRACTOR MUST PROVIDE ERECTION METHODS AND DETAILED ERECTION PLANS.

3.0 WELDING NOTES FOR STIFFENERS, BEARING AREAS, LIFTING LUGS, AND STUDS

WELDING SPECIFICATIONS: AASHTO/AWS D1.5M/D1.5 BRIDGE WELDING CODE (2008) CONSISTENT WITH PUBLICATION 408 SECTION 1105.03(m), AND THE CONTRACT SPECIAL PROVISIONS. DO NO FIELD-WELD ON ANY PART OF THE BRIDGE, EXCEPT WHERE SHOWN ON THE DRAWINGS, WITHOUT PRIOR APPROVAL OF THE ENGINEER.

TEST COMPLETED WELDS USING VISUAL AND NONDESTRUCTIVE METHODS IN ACCORDANCE WITH AASHTO/AWS D1.5M/D1.5 BRIDGE WELDING CODE, CHAPTER 6.

BRIDGE LOAD RATINGS

ADTT (AT THE TIME OF DESIGN)

SPAN NO.		FOLDED STEEL PLATE GIRDER					
		H20	HS20	ML-80	TK527	PHL-93	P-82
INVENTORY RATING (IR)	DIST. FACTOR						
	LOCATION						
	LIMIT STATE						
	RATING FACTOR						
OPERATING RATING (OR)	DIST. FACTOR						
	LOCATION						
	LIMIT STATE						
	RATING FACTOR						

PER DESIGN

INDEX OF DRAWINGS

TITLE	SHEET
DESIGN SPECIFICATIONS	1 OF 21
INDEX OF DRAWINGS & CONSTRUCTION SPECIFICATIONS	2 OF 21
GENERAL PLAN & ELEVATION	3 OF 21
TYPICAL SECTIONS	4 OF 21
GIRDER PANEL LAYOUT	5 OF 21
DIAPHRAGM DETAILS - 1	6 OF 21
DIAPHRAGM DETAILS - 2	7 OF 21
GIRDER DETAILS - 1	8 OF 21
GIRDER DETAILS - 2	9 OF 21
GIRDER TOLERANCES	10 OF 21
GIRDER TABLES - 1 THRU 11	11-21 OF 21

PENNDOT DRAWING #14-604-BDTD (REV. 9/2/2014

9/19/2019

DESIGNER

CDR BRIDGE SYSTEMS

D.L. CLARK BUILDING, SUITE 610
503 MARTINDALE STREET
PITTSBURGH, PA 15212-5746
P: 412-322-0313
F: 412-322-2138
WEB: www.cdrbridges.com

DATE:	04/08/19
SCALE:	NOT TO SCALE
DESIGNED:	RTE
DRAWN:	RTE
CHECKED:	WES
CDR JOB #:	

COMMONWEALTH OF PENNSYLVANIA
DEPARTMENT OF TRANSPORTATION
BUREAU OF PROJECT DELIVERY

CDR BRIDGE SYSTEMS, LLC

FOLDED STEEL PLATE GIRDER SYSTEM

INDEX OF DRAWINGS & CONSTRUCTION SPECIFICATIONS

SHEET 2 OF 21

PLOTTED: 4/8/2019 8:01:01 AM

OPERATOR: Robert.Elliott
FILE PATH: P:\CDR BRIDGE\PROPOSALS\P3672.00-Folded_Steel_Plate_Girder\Design\USTN\PennDOT\01-02 FSPG General Notes.dgn

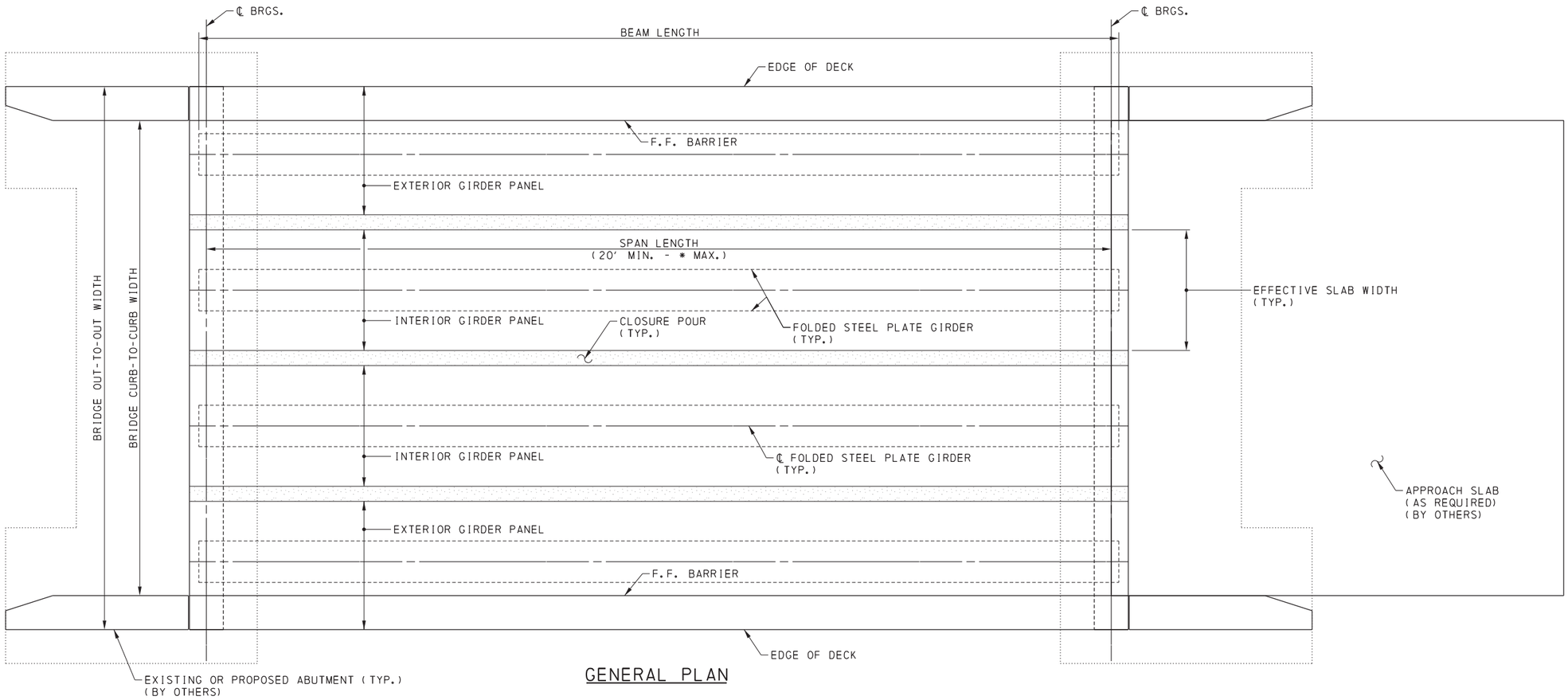

GENERAL PLAN

*FOR MAXIMUM SPAN LENGTHS SEE SHEET NO. 5

NOTE: THIS BRIDGE SYSTEM IS COMPATIBLE WITH ALL SUBSTRUCTURE TYPES.

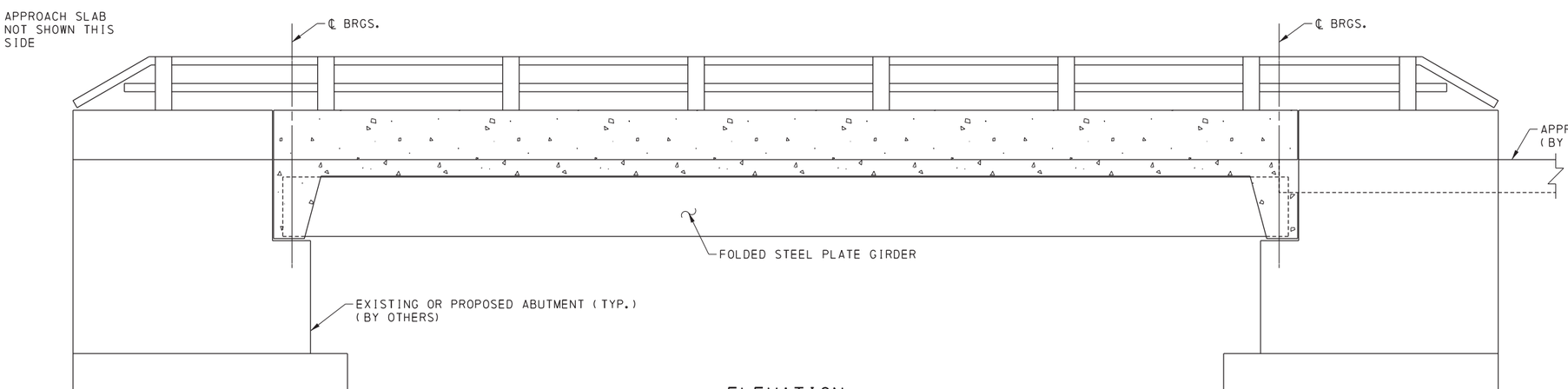

ELEVATION

NOTES:

1. FOR INDEX OF DRAWINGS AND SPECIFICATIONS, SEE SHEET NOS. 1 & 2.
2. FOR TYPICAL SECTION DETAILS, SEE SHEET NO. 4.
3. FOR GIRDER DETAILS, SEE SHEET NOS. 8 & 9.
4. FOR GIRDER PANEL LAYOUT, SEE SHEET NO. 5.
5. FOR DIAPHRAGM DETAILS, SEE SHEET NOS. 6 & 7.
6. FOR GIRDER TABLES, SEE SHEET NOS. 11-21.

PENNDOT DRAWING #14-604-BDTD (REV. 9/2/2014)

COMMONWEALTH OF PENNSYLVANIA
DEPARTMENT OF TRANSPORTATION
BUREAU OF PROJECT DELIVERY

CDR BRIDGE SYSTEMS, LLC

FOLDED STEEL PLATE GIRDER SYSTEM

GENERAL PLAN & ELEVATION

SHEET 3 OF 21

9/19/2019

DESIGNER		
CDR BRIDGE SYSTEMS D.L. CLARK BUILDING, SUITE 610 503 MARTINDALE STREET PITTSBURGH, PA 15212-5746 P: 412-322-0313 F: 412-322-2138 WEB: www.cdrbridges.com	DATE:	04/08/19
	SCALE:	NOT TO SCALE
	DESIGNED:	RTE
	DRAWN:	RTE
	CHECKED:	WES
	CDR JOB #:	

PLOTTED: 4/8/2019 8:01:37 AM
OPERATOR: Robert.Elliott
FILE PATH: P:\CDR BRIDGE\PROPOSALS\P3672.00-Folded_Steel_Plate_Girder\Design\USTN\PennDOT\03 FSPG_Plan&Elev.dgn

PLOTTED: 4/8/2019
8:02:16 AM

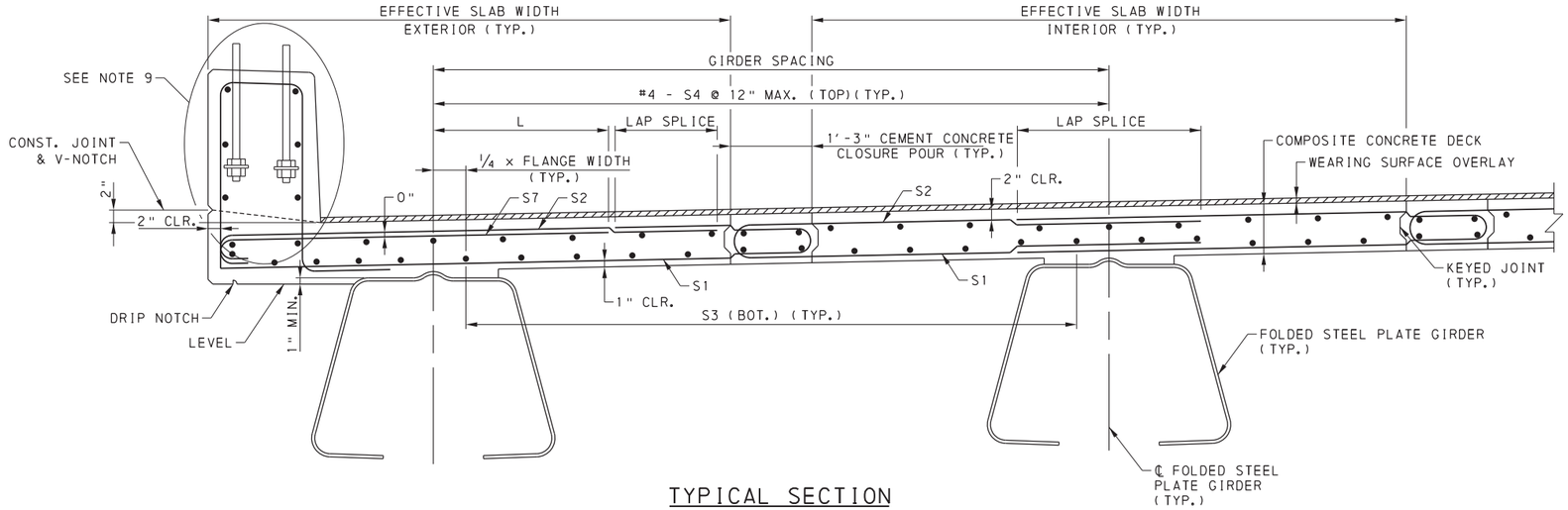

TYPICAL SECTION

(WITH 1'-3" CEMENT CONCRETE CLOSURE POUR)

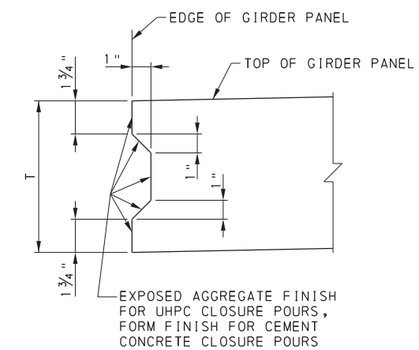

KEYED JOINT DETAIL

N.T.S.
(REBAR NOT SHOWN FOR CLARITY)

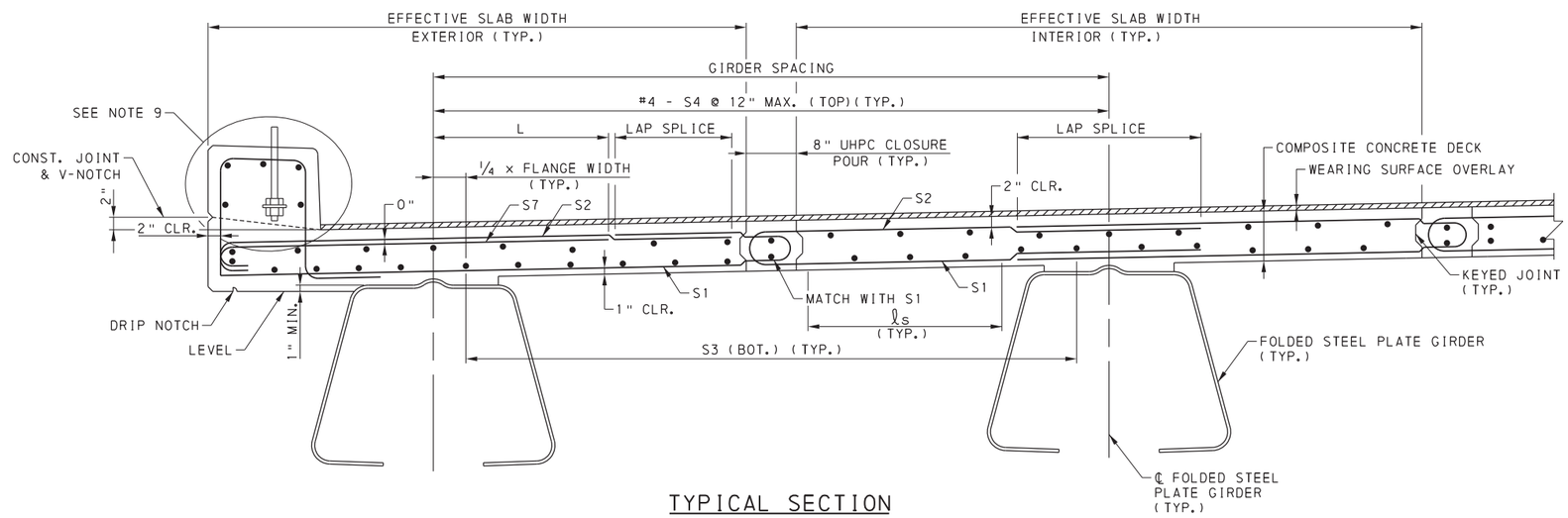

TYPICAL SECTION

(WITH 8" UHPC CLOSURE POUR)

NOTE: PA BRIDGE BARRIER AND PA TYPE 10M BRIDGE BARRIER SHOWN.
OTHER BARRIERS MAY BE ACCOMMODATED.

NOTES:

1. FOR INDEX OF DRAWINGS AND SPECIFICATIONS, SEE SHEET NOS. 1 & 2.
2. FOR GIRDER PANEL LAYOUT, SEE SHEET NO. 5
3. FOR GIRDER DETAILS, SEE SHEET NOS. 8 & 9.
4. FOR DIAPHRAGM DETAILS, SEE SHEET NOS. 6 & 7.
5. FOR DECK SLAB REINFORCEMENT, SEE STD. DWG. BD-601M.
6. FOR DECK SLAB DETAILS, SEE STD. DWG. BD-601M & BC-752M.
7. FOR HAUNCH REINFORCEMENT DETAILS, SEE STD. DWGS. BD-601M & BC-752M.
8. FOR DRIP NOTCH DETAILS, SEE STD. DWG. BC-752M & BC-775M.
9. FOR BARRIER DETAILS, SEE STD. DWG. BD-600M SERIES & BC-700M SERIES.

9/19/2019

DESIGNER		
CDR BRIDGE SYSTEMS D.L. CLARK BUILDING, SUITE 610 503 MARTINDALE STREET PITTSBURGH, PA 15212-5746 P: 412-322-0313 F: 412-322-2138 WEB: www.cdrbridges.com	DATE:	04/08/19
	SCALE:	NOT TO SCALE
	DESIGNED:	RTE
	DRAWN:	RTE
	CHECKED:	WES
	CDR JOB #:	

PENNDOT DRAWING #14-604-BDTD 9/2/2014

COMMONWEALTH OF PENNSYLVANIA
DEPARTMENT OF TRANSPORTATION
BUREAU OF PROJECT DELIVERY

CDR BRIDGE SYSTEMS, LLC

FOLDED STEEL PLATE GIRDER SYSTEM

TYPICAL SECTIONS

OPERATOR: Robert.Elliott
FILE PATH: P:\CDR BRIDGE\PROPOSALS\P3672.00-Folded_Steel_Plate_Girder\Design\USTN\PennDOT\04 FSPG_Typical Sections.dgn

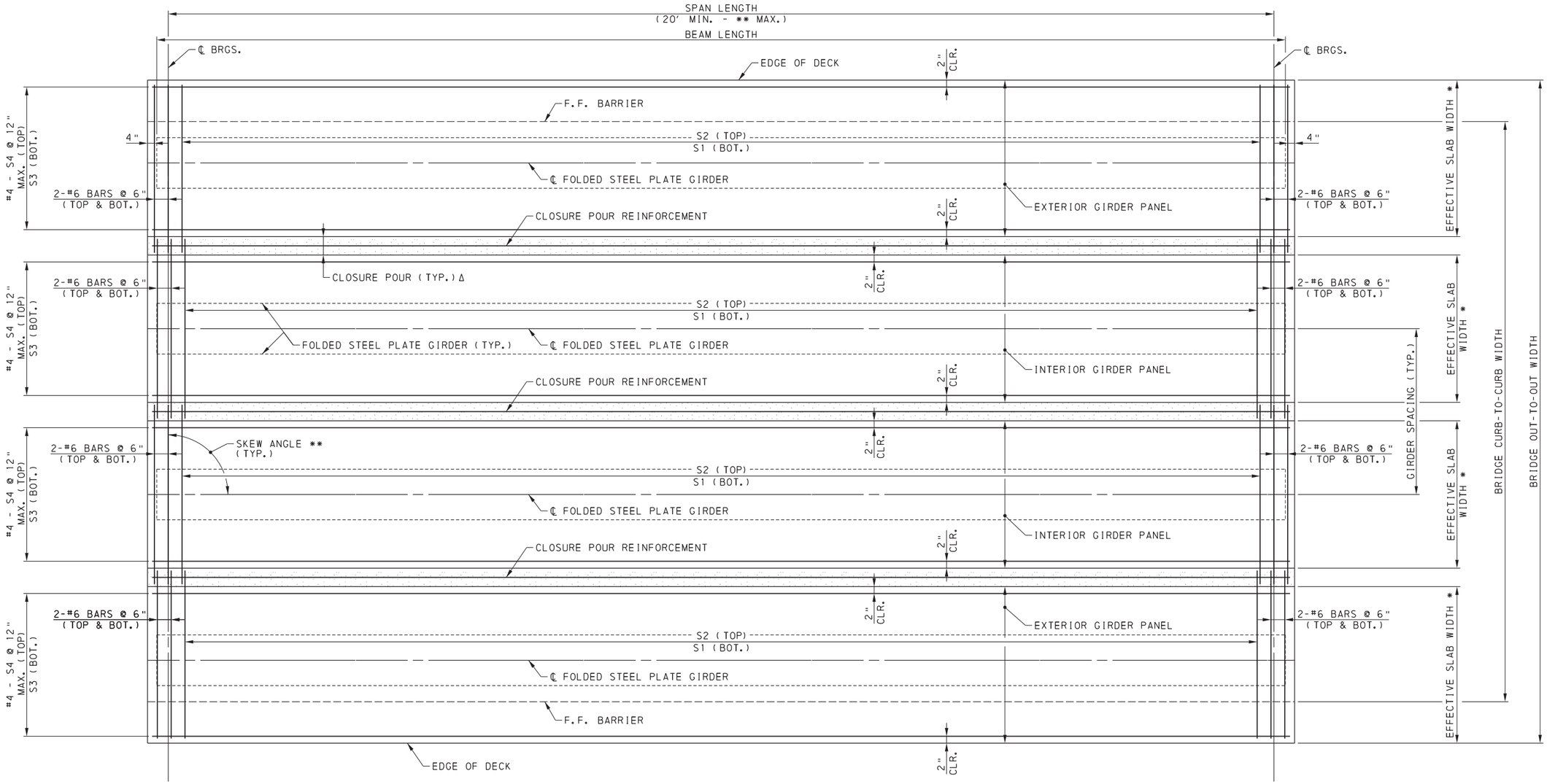

TYPICAL GIRDER PANEL LAYOUT

Δ 8" CLOSURE POUR SHOWN, THE 15" CLOSURE POUR IS SIMILAR.

	*MAX EFFECTIVE SLAB WIDTH	
	8" CLOSURE POUR	15" CLOSURE POUR
INTERIOR SLAB	10'-8"	9'-6"
EXTERIOR SLAB	11'-4"	10'-9"

*BASED ON 12' MAX SHIPPING WIDTH

** MAXIMUM SPAN LENGTH ALLOWABLE BASED ON SKEW	
PENNDOT SKEW	MAXIMUM SPAN LENGTH
90°	59'-0"
85°	58'-8 1/8"
80°	58'-4 1/8"
75°	58'-0 1/8"
70°	57'-7 7/8"
65°	57'-3 3/8"
60°	56'-10 1/2"
55°	56'-5 1/8"
50°	55'-11"
45°	55'-4"

9/19/2019

NOTES:

1. FOR INDEX OF DRAWINGS AND SPECIFICATIONS, SEE SHEET NOS. 1 & 2.
2. FOR TYPICAL SECTION DETAILS, SEE SHEET NO. 4.
3. FOR DIAPHRAGM DETAILS, SEE SHEET NOS. 6 & 7.
4. FOR GIRDER DETAILS, SEE SHEET NOS. 8 & 9.
5. FOR GIRDER TABLES, SEE SHEET NOS. 11-21.
6. FOR DECK SLAB REINFORCEMENT, SEE STD. DWG, BD-601M.

DESIGNER

CDR BRIDGE SYSTEMS
D.L. CLARK BUILDING, SUITE 610
503 MARTINDALE STREET
PITTSBURGH, PA 15212-5746
P: 412-322-0313
F: 412-322-2138
WEB: www.cdrbridges.com

DATE:	04/08/19
SCALE:	NOT TO SCALE
DESIGNED:	RTE
DRAWN:	RTE
CHECKED:	WES
CDR JOB #:	

PENNDOT DRAWING #14-604-BDTD (REV. 9/2/2014)

COMMONWEALTH OF PENNSYLVANIA
DEPARTMENT OF TRANSPORTATION
BUREAU OF PROJECT DELIVERY

CDR BRIDGE SYSTEMS, LLC

FOLDED STEEL PLATE GIRDER SYSTEM

GIRDER PANEL LAYOUT

PLOTTED: 4/8/2019 8:03:13 AM
OPERATOR: Robert.Elliott
FILE PATH: P:\CDR BRIDGE\PROPOSALS\P3672.00-Folded_Steel_Plate_Girder\Design\UST\PennDOT\05 FSPG_Panel Plan View.dgn

PLOTTED: 4/8/2019
8:04:53 AM

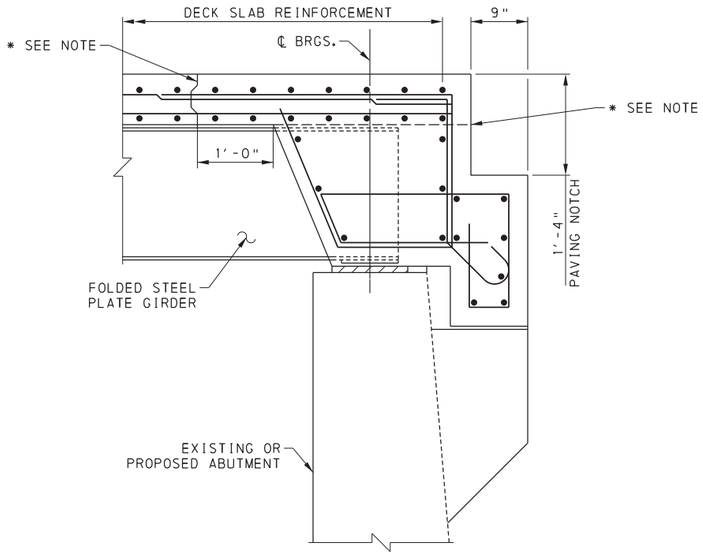

TYPE 1 APPROACH SLAB

FOR BEAM DEPTHS LESS THAN 2'-1½"

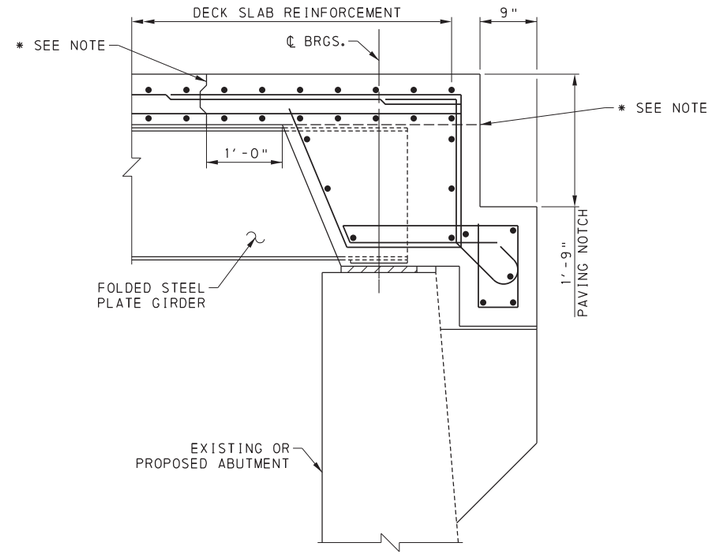

TYPE 2 APPROACH SLAB

FOR BEAM DEPTHS LESS THAN 2'-6½"

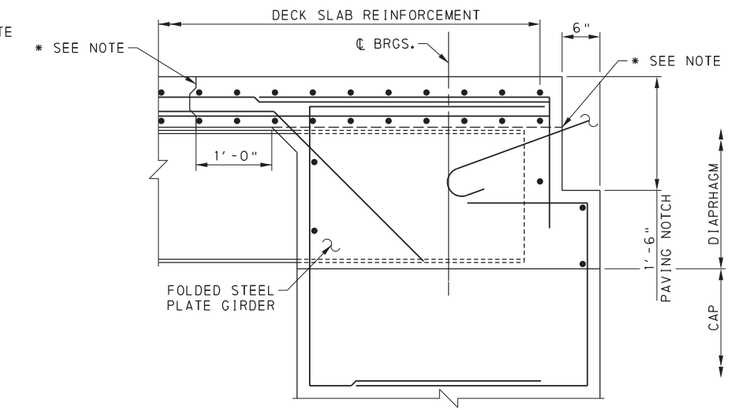

TYPE 5 APPROACH SLAB

FOR BEAM DEPTHS LESS THAN 2'-0"

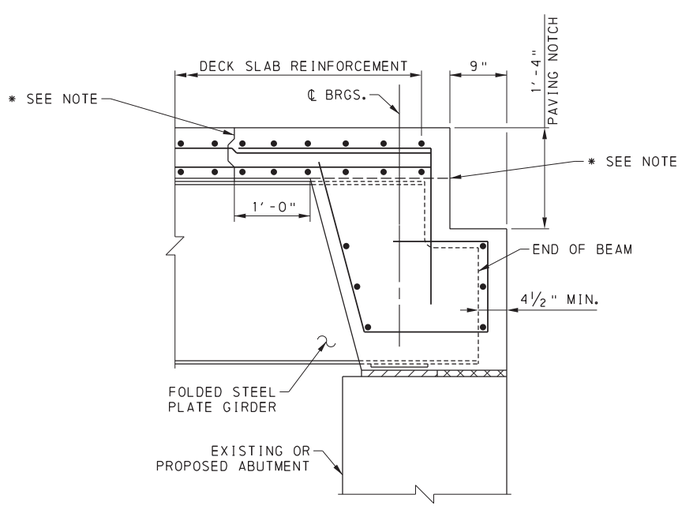

TYPE 1 APPROACH SLAB

FOR BEAM DEPTHS 2'-1½" AND GREATER

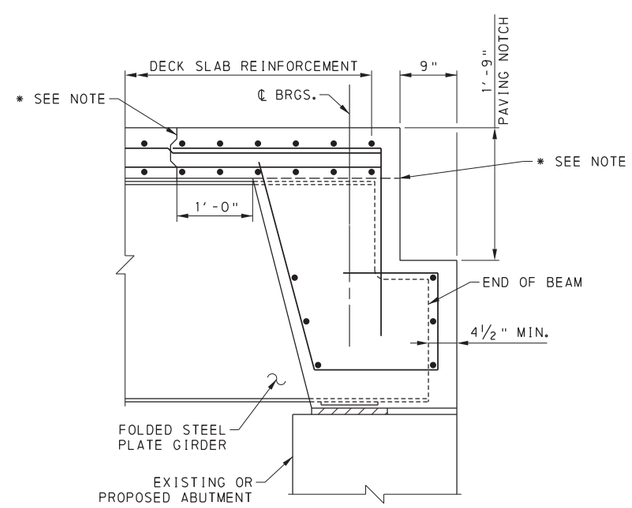

TYPE 2 APPROACH SLAB

FOR BEAM DEPTHS 2'-6½" AND GREATER

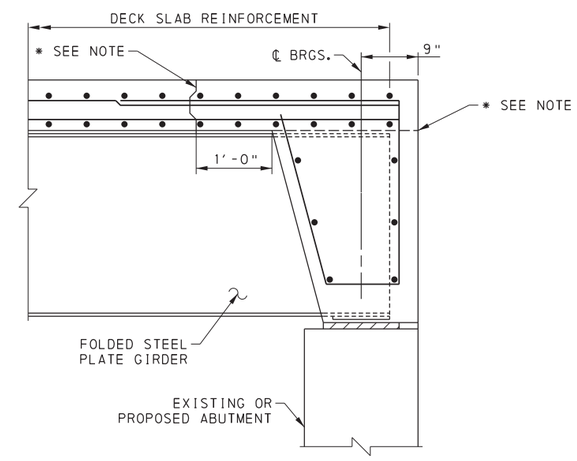

FULL DEPTH END DIAPHRAGM WITHOUT BACKWALL AND PAVING NOTCH

* NOTE: FOR PRECAST CONCRETE END DIAPHRAGMS, PROVIDE CONSTRUCTION JOINT AT THE UNDERSIDE OF DECK SLAB. FOR CAST-IN-PLACE CONCRETE END DIAPHRAGMS, PROVIDE VERTICAL CONSTRUCTION JOINT AT 1'-0" FROM FACE OF END DIAPHRAGM.

NOTES:

1. FOR INDEX OF DRAWINGS AND SPECIFICATIONS, SEE SHEET NOS. 1 & 2.
2. FOR TYPICAL SECTION DETAILS, SEE SHEET NO. 4.
3. FOR GIRDER PANEL LAYOUT, SEE SHEET NO. 5.
4. FOR ADDITIONAL DIAPHRAGM DETAILS, SEE SHEET NO. 7.
6. FOR GIRDER DETAILS, SEE SHEET NOS. 8 & 9.
7. FOR GIRDER TABLES, SEE SHEET NOS. 11-21.
8. FOR ADDITIONAL END DIAPHRAGM DETAILS, SEE STD. DWG. BD-611M, BD-628M AND BD-667M.
9. FOR ADDITIONAL APPROACH SLAB DETAILS, SEE STD. DWG. BD-628M.
10. FOR WATERPROOFING DETAILS, SEE STD. DWG. BC-788M.

9/19/2019

DESIGNER
CDR BRIDGE SYSTEMS
D.L. CLARK BUILDING, SUITE 610
503 MARTINDALE STREET
PITTSBURGH, PA 15212-5746
P: 412-322-0313
F: 412-322-2138
WEB: www.cdrbridges.com

DATE:	04/08/19
SCALE:	NOT TO SCALE
DESIGNED:	RTE
DRAWN:	RTE
CHECKED:	WES
CDR JOB #:	

PENNDOT DRAWING #14-604-BDTD (~~9/2/2014~~)

COMMONWEALTH OF PENNSYLVANIA
DEPARTMENT OF TRANSPORTATION
BUREAU OF PROJECT DELIVERY

CDR BRIDGE SYSTEMS, LLC

FOLDED STEEL PLATE GIRDER SYSTEM

DIAPHGRAGM DETAILS - 1

OPERATOR: Robert.Elliott
FILE PATH: P:\CDR BRIDGE\PROPOSALS\P3672.00-Folded_Steel_Plate_Girder\Design\USTN\PennDOT\06 FSPG Diaphragm Details_1.dgn

PLOTTED: 4/8/2019
8:05:23 AM

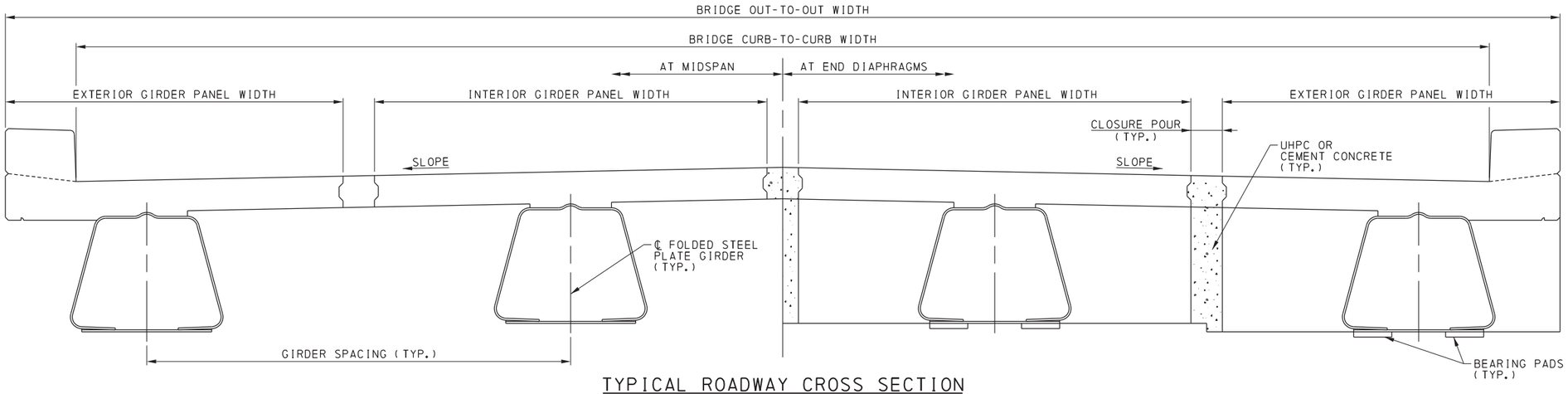

TYPICAL ROADWAY CROSS SECTION

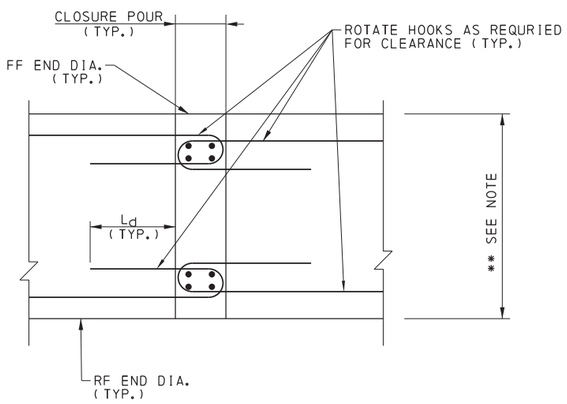

SECTION A-A

** NOTE: 4'-0" FOR INTEGRAL ABUTMENTS, 1'-3" (MIN.) & VARIES FOR CONCRETE END DIAPHRAGMS USED IN SIMPLY SUPPORTED APPLICATIONS.

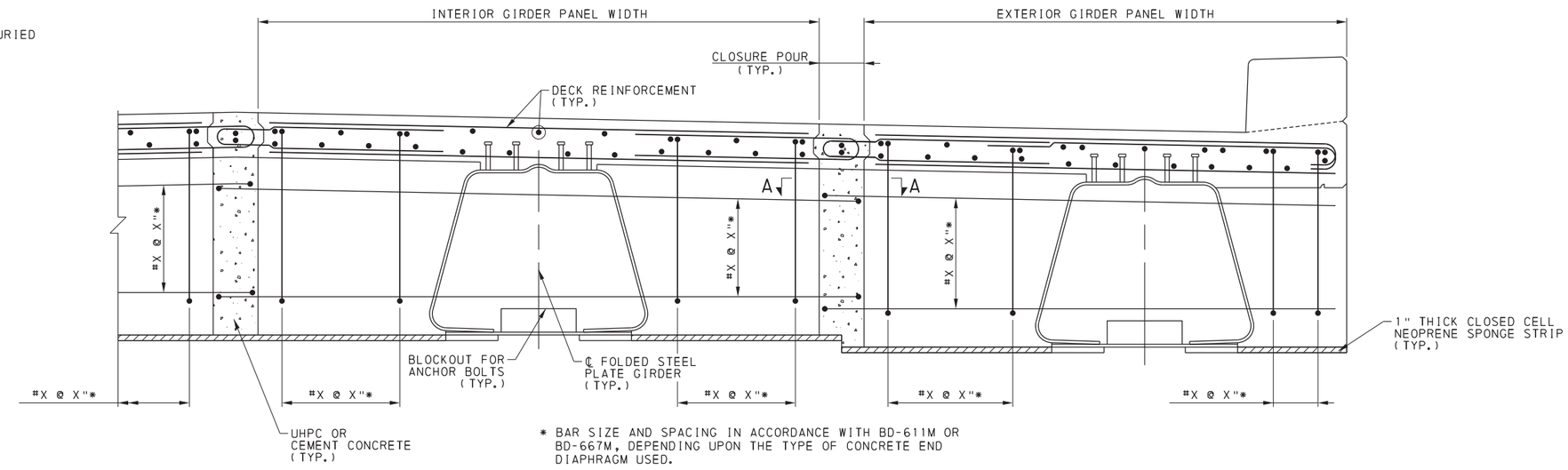

* BAR SIZE AND SPACING IN ACCORDANCE WITH BD-611M OR BD-667M, DEPENDING UPON THE TYPE OF CONCRETE END DIAPHRAGM USED.

END DIAPHRAGM ELEVATION

NOTES:

1. FOR INDEX OF DRAWINGS AND SPECIFICATIONS, SEE SHEET NOS. 1 & 2.
2. FOR TYPICAL SECTION DETAILS, SEE SHEET NO. 4.
3. FOR GIRDER PANEL LAYOUT, SEE SHEET NO. 5.
4. FOR ADDITIONAL DIAPHRAGM DETAILS, SEE SHEET NO. 6.
6. FOR GIRDER DETAILS, SEE SHEET NOS. 8 & 9.
7. FOR GIRDER TABLES, SEE SHEET NOS. 11-21.
8. FOR ADDITIONAL END DIAPHRAGM DETAILS, SEE STD. DWG. BD-611M, BD-628M AND BD-667M.
9. FOR ADDITIONAL APPROACH SLAB DETAILS, SEE STD. DWG. BD-628M.
10. FOR WATERPROOFING DETAILS, SEE STD. DWG. BC-788M.

9/19/2019

DESIGNER		
CDR BRIDGE SYSTEMS D.L. CLARK BUILDING, SUITE 610 503 MARTINDALE STREET PITTSBURGH, PA 15212-5746 P: 412-322-0313 F: 412-322-2138 WEB: www.cdrbridges.com	DATE:	04/08/19
	SCALE:	NOT TO SCALE
	DESIGNED:	RTE
	DRAWN:	RTE
	CHECKED:	WES
	CDR JOB #:	

PENNDOT DRAWING #14-604-BDTD (REV 9/2/2014

COMMONWEALTH OF PENNSYLVANIA
DEPARTMENT OF TRANSPORTATION
BUREAU OF PROJECT DELIVERY

CDR BRIDGE SYSTEMS, LLC
FOLDED STEEL PLATE GIRDER SYSTEM

DIAPHRAGM DETAILS - 2

SHEET 7 OF 21

OPERATOR: Robert.Elliott
FILE PATH: P:\CDR BRIDGE\PROPOSALS\P3672.00-Folded_Steel_Plate_Girder\Design\USTN\PennDOT\07 FSPG Diaphragm Details.2.dgn

PLOTTED: 4/8/2019
8:05:52 AM

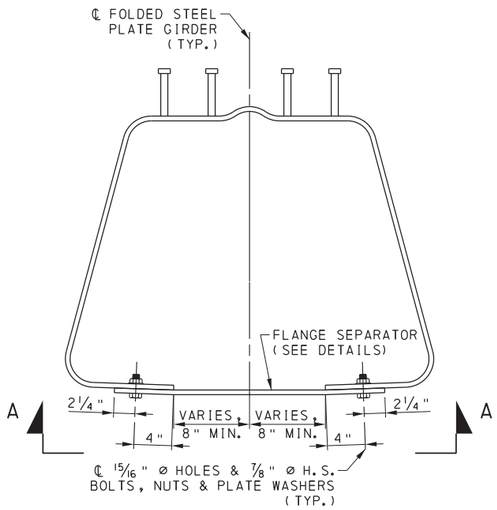

GIRDER SECTION AT FLANGE SEPARATOR

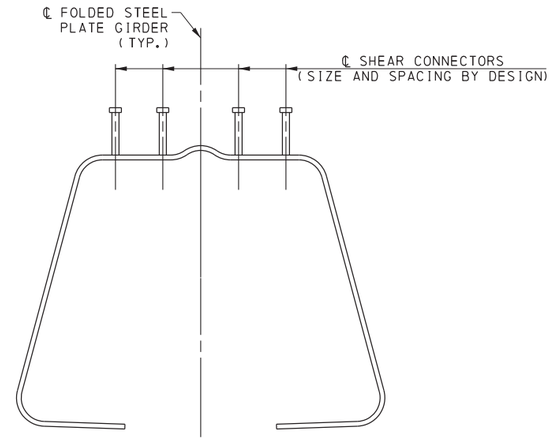

SHEAR CONNECTOR DETAIL

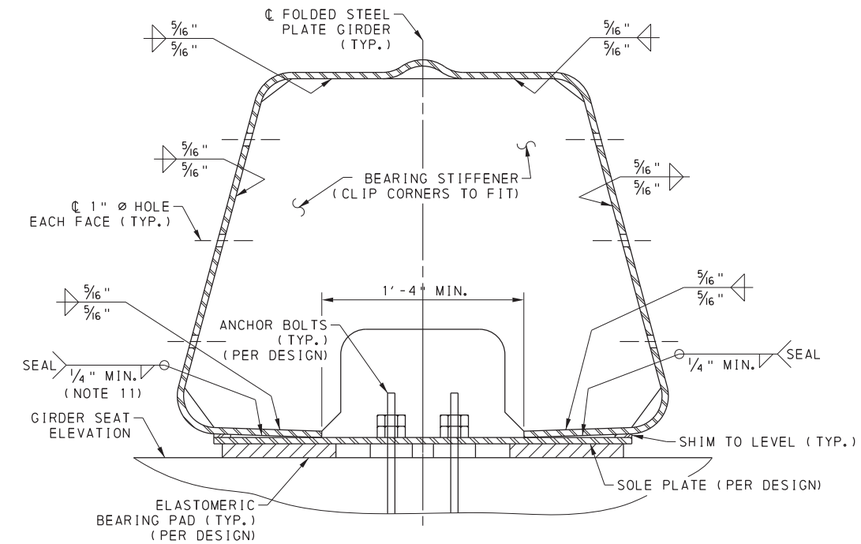

GIRDER SECTION AT ℄ BEARING - CONVENTIONAL ABUTMENT

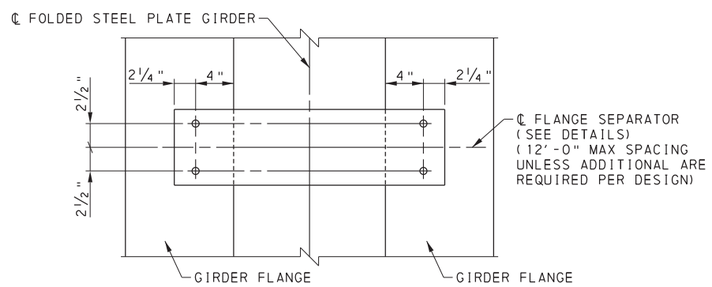

SECTION A-A

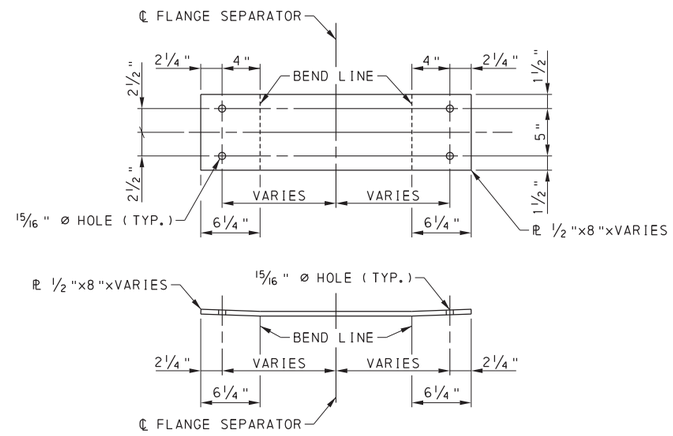

FLANGE SEPARATOR DETAILS

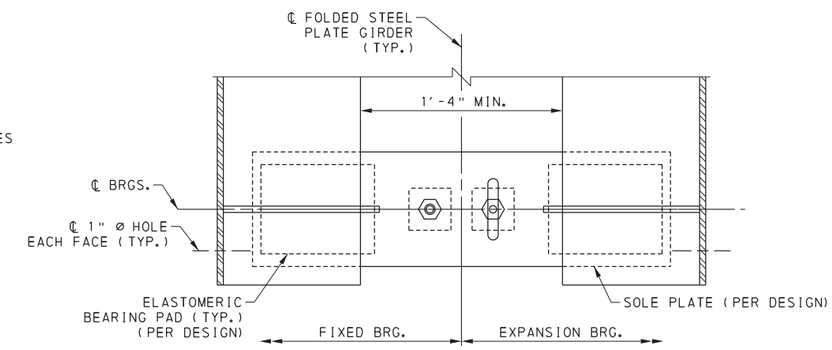

GIRDER PLAN VIEW AT BEARINGS - CONVENTIONAL ABUTMENT

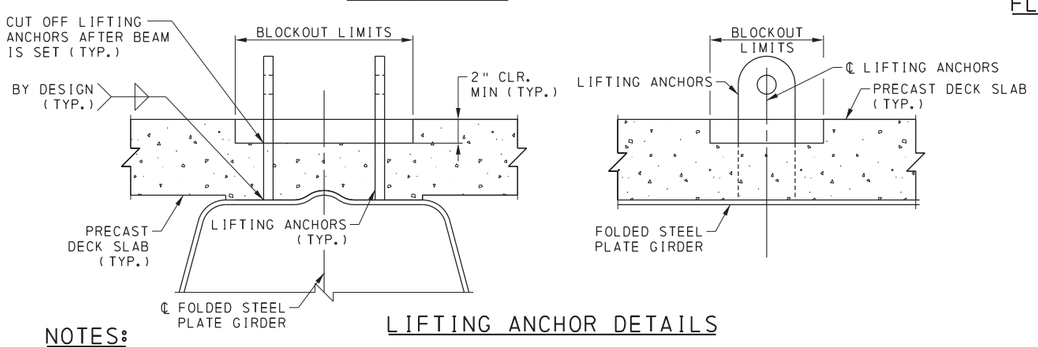

LIFTING ANCHOR DETAILS

NOTES:

1. FOR INDEX OF DRAWINGS AND SPECIFICATIONS, SEE SHEET NOS. 1 & 2.
2. FOR TYPICAL SECTION DETAILS, SEE SHEET NO. 4.
3. FOR GIRDER PANEL LAYOUT, SEE SHEET NO. 5.
4. FOR DIAPHRAGM DETAILS, SEE SHEET NOS. 6 & 7.
5. FOR ADDITIONAL GIRDER DETAILS, SEE SHEET NO. 9.
6. FOR GIRDER TOLERANCES, SEE SHEET NO. 10.
7. FOR GIRDER TABLES, SEE SHEET NOS. 11-21.
8. FOR ADDITIONAL SHEAR STUD DETAILS, SEE STD. DWG. BC-753M.
9. FOR ADDITIONAL BEARING STIFFENER DETAILS, SEE STD. DWG. BC-753M.
10. FOR ADDITIONAL BEARING DETAILS, SEE STD. DWG. BD-653M AND BC-755M.
11. FOR WELDING DETAILS AND REQUIREMENTS, SEE AWS D1.5.

9/19/2019

DESIGNER
CDR BRIDGE SYSTEMS
D.L. CLARK BUILDING, SUITE 610
503 MARTINDALE STREET
PITTSBURGH, PA 15212-5746
P: 412-322-0313
F: 412-322-2138
WEB: www.cdrbridges.com

DATE:	04/08/19
SCALE:	NOT TO SCALE
DESIGNED:	RTE
DRAWN:	RTE
CHECKED:	WES
CDR JOB #:	

PENNDOT DRAWING #14-604-BDTD (FEB 9/2/2014

COMMONWEALTH OF PENNSYLVANIA
DEPARTMENT OF TRANSPORTATION
BUREAU OF PROJECT DELIVERY

CDR BRIDGE SYSTEMS, LLC
FOLDED STEEL PLATE GIRDER SYSTEM

GIRDER DETAILS - 1

OPERATOR: Robert.Elliott
FILE PATH: P:\CDR BRIDGE\PROPOSALS\P3672.00-Folded_Steel_Plate_Girder\Design\USTN\PennDOT\08 FSPG Beam Details_1.dgn

PLOTTED: 4/8/2019
8:06:17 AM

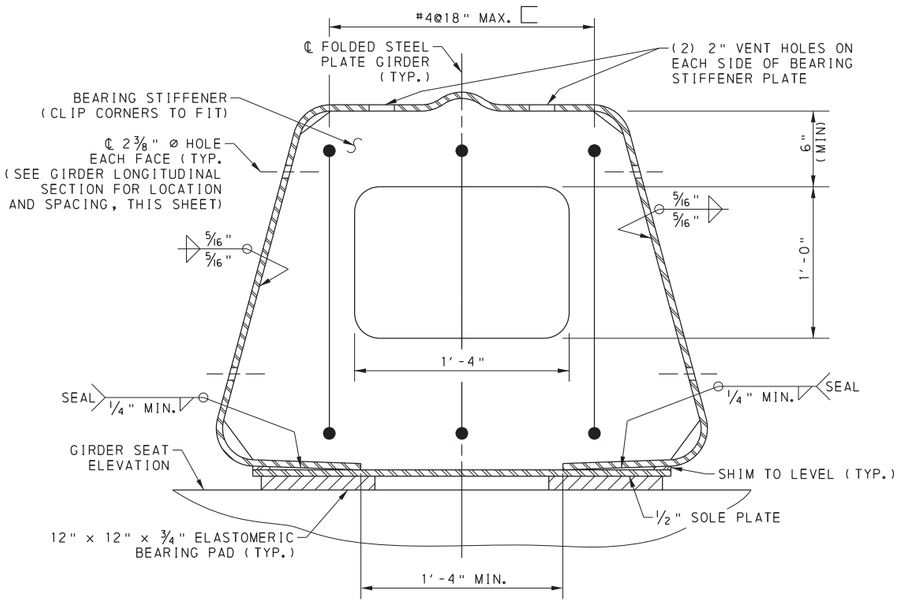

GIRDER SECTION AT ℄ BEARING - INTEGRAL ABUTMENT

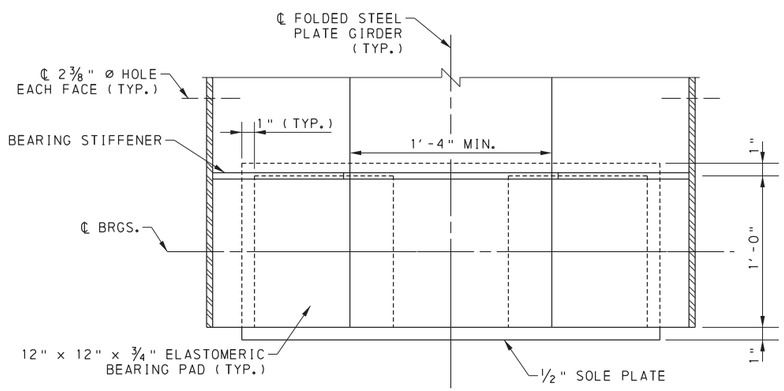

GIRDER PLAN VIEW AT BEARINGS - INTEGRAL ABUTMENT

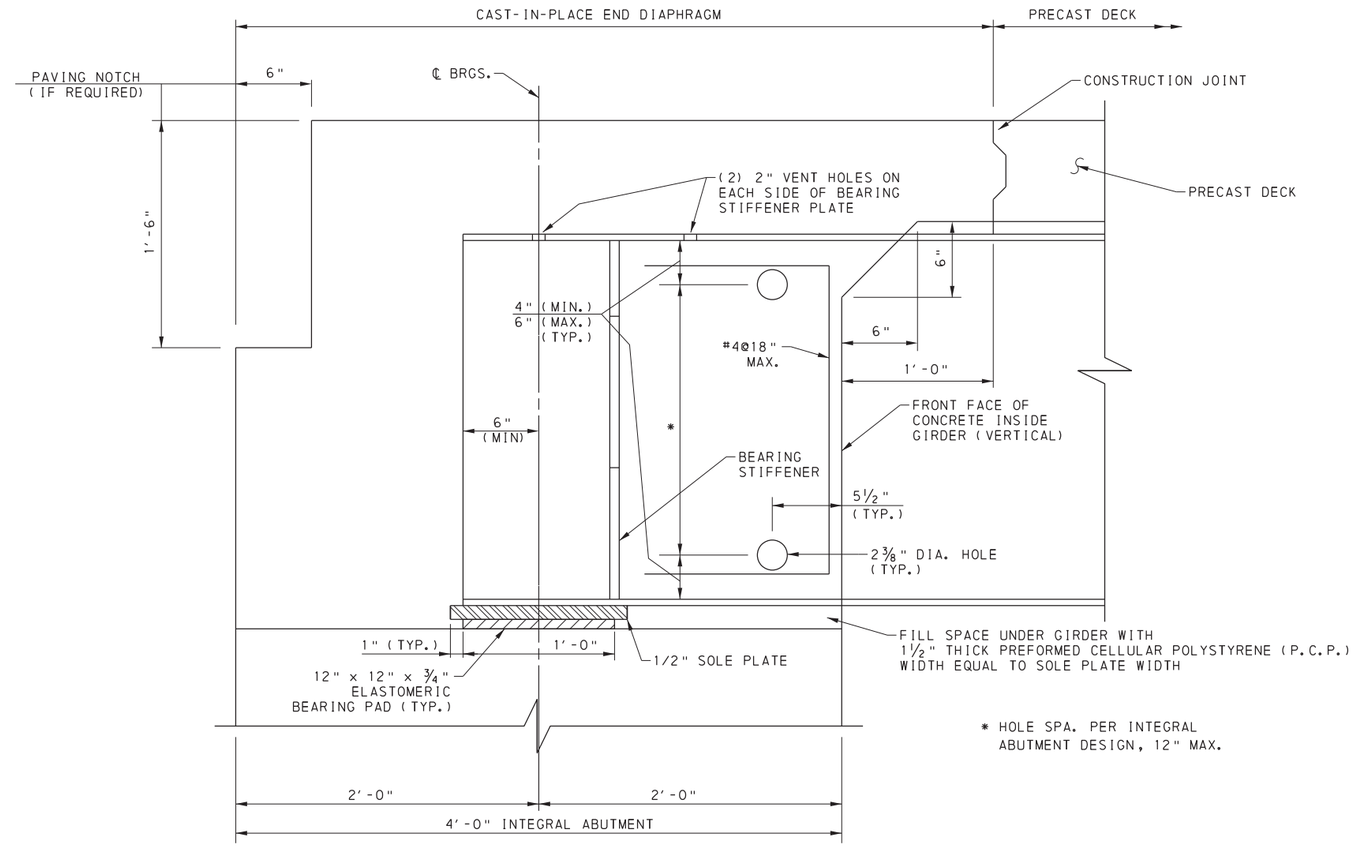

* HOLE SPA. PER INTEGRAL ABUTMENT DESIGN, 12" MAX.

GIRDER LONGITUDINAL SECTION - INTEGRAL ABUTMENT

NOTE:

THE DETAILS ON THIS SHEET APPLY TO INTEGRAL ABUTMENTS WITH CAST-IN-PLACE END DIAPHRAGMS ONLY.
IF PRECAST END DIAPRHAGMS ARE USED, DETAILS FOR ANCHORAGE AND/OR DOWELS MUST BE SUBMITTED FOR APPROVAL.

NOTES:

1. FOR INDEX OF DRAWINGS AND SPECIFICATIONS, SEE SHEET NOS. 1 & 2.
2. FOR TYPICAL SECTION DETAILS, SEE SHEET NO. 4.
3. FOR GIRDER PANEL LAYOUT, SEE SHEET NO. 5.
4. FOR DIAPHRAGM DETAILS, SEE SHEET NOS. 6 & 7.
5. FOR ADDITIONAL GIRDER DETAILS, SEE SHEET NO. 8.
6. FOR GIRDER TOLERANCES, SEE SHEET NO. 10.
7. FOR GIRDER TABLES, SEE SHEET NOS. 11-21.
8. FOR ADDITIONAL SHEAR STUD DETAILS, SEE STD. DWG. BC-753M.
9. FOR ADDITIONAL BEARING STIFFENER DETAILS, SEE STD. DWG. BC-753M.
10. FOR ADDITIONAL BEARING DETAILS, SEE STD. DWG. BD-653M AND BC-755M

9/19/2019

DESIGNER
CDR BRIDGE SYSTEMS
D.L. CLARK BUILDING, SUITE 610
503 MARTINDALE STREET
PITTSBURGH, PA 15212-5746
P: 412-322-0313
F: 412-322-2138
WEB: www.cdrbridges.com

DATE:	04/08/19
SCALE:	NOT TO SCALE
DESIGNED:	RTE
DRAWN:	RTE
CHECKED:	WES
CDR JOB #:	

PENNDOT DRAWING #14-604-BDTD (R3 9/2/2014

COMMONWEALTH OF PENNSYLVANIA
DEPARTMENT OF TRANSPORTATION
BUREAU OF PROJECT DELIVERY

CDR BRIDGE SYSTEMS, LLC
FOLDED STEEL PLATE GIRDER SYSTEM

GIRDER DETAILS - 2

OPERATOR: Robert.Elliott
FILE PATH: P:\CDR BRIDGE\PROPOSALS\P3672.00-Folded_Steel_Plate_Girder\Design\USTN\PennDOT\09 FSPG Beam Details_2.dgn

PLOTTED: 4/8/2019
8:06:43 AM

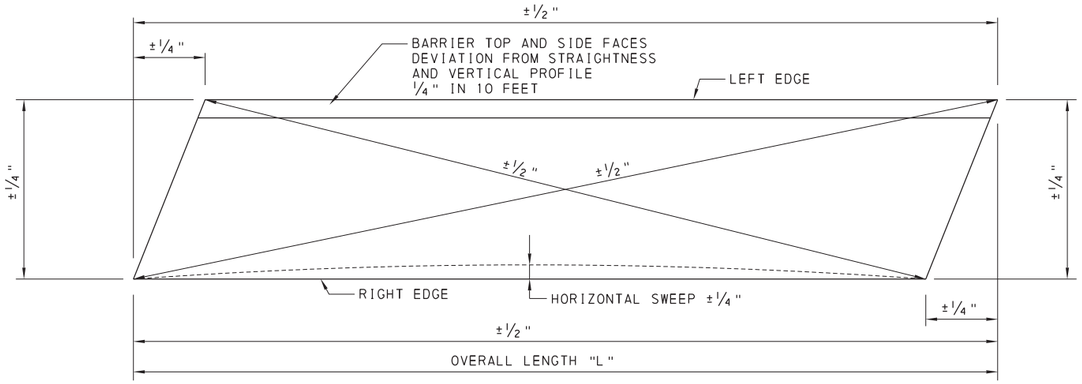

PLAN

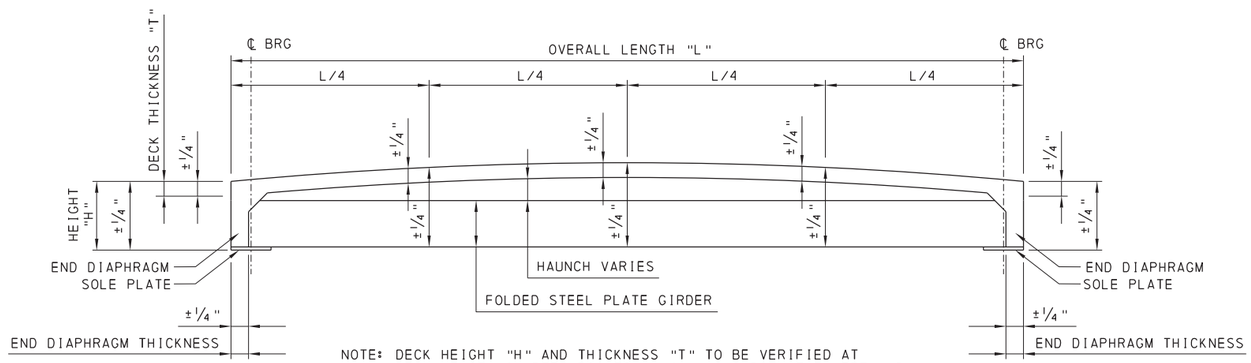

NOTE: DECK HEIGHT "H" AND THICKNESS "T" TO BE VERIFIED AT DECK LENGTH QUARTER POINTS "L/4" ALONG BOTH THE LEFT AND RIGHT EDGES AND AT ANY CROSS SLOPE BREAK POINTS ON THE DECK.

ELEVATION

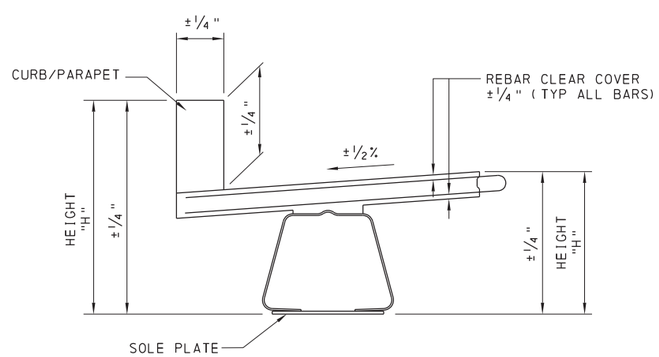

SECTION

PRECAST COMPOSITE CONCRETE DECK TOLERANCES

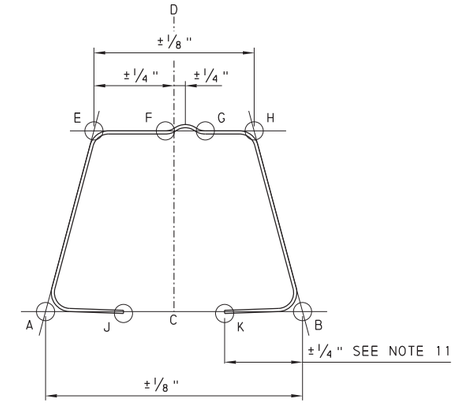

NOTE: TOLERANCES SHOWN APPLY TO THE GIRDER BETWEEN THE BEARING STIFFENER PLATES. SEE ALLOWABLE FLARE DIMENSIONS FOR AREAS AT ENDS OF GIRDER

FOLDED STEEL PLATE GIRDER TOLERANCES

TOLERANCES:

1. ESTABLISH BASELINE BETWEEN BOTTOM TANGENT POINTS (A-B)
2. DETERMINE MIDPOINT ON BASELINE (C)
3. ESTABLISH PERPENDICULAR REFERENCE LINE (C-D)
4. VERTICAL DISTANCE FROM BASELINE TOLERANCE:
   E AND H: ±1/8"
   F AND G: +1/2"/-0"
   J AND K: ±1/4"
5. MAX HEIGHT DIFFERENCE OF POINTS F AND G SHALL BE 1/8"
6. OVERALL BOTTOM WIDTH TOLERANCE APPLIES TO BEARING STIFFENER AND FLANGE SEPARATOR LOCATIONS
7. SWEEP TOLERANCE IS ±1/8"/12'-0" (MAX. 1/2")
8. SOLE PLATE FLATNESS ±1/8"
9. POSITIVE CAMBER +1/4"/-0" (EXCLUSIVE OF SELF WEIGHT DEFLECTION)
10. TWIST ±1/8"/12'-0" (MAX. 1/2")
11. COMBINED WIDTH TOLERANCE FOR BOTH BOTTOM FLANGES IS +1/2"/-1/4"
12. CAMBER, SWEEP, AND TWIST TOLERANCES ARE TO BE MEASURED WITH FSPG IN UPRIGHT POSITION SUPPORTED AT ℄ BEARINGS AND SUPPORTED ON BLOCKING SPACED AT 5FT MAX ALONG THE LENGTH OF THE GIRDER.

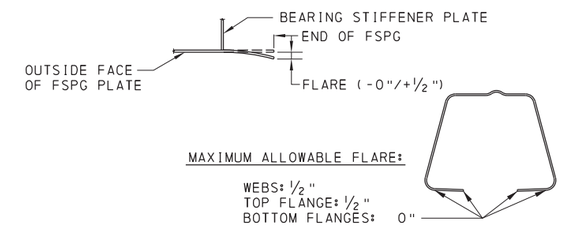

MAXIMUM ALLOWABLE FLARE:

WEBS: 1/2"
TOP FLANGE: 1/2"
BOTTOM FLANGES: 0"

ANY FLARE PRESENT AT BOTTOM FLANGES MUST BE STRAIGHTENED SO THAT SOLE PLATES CAN BE ATTACHED PER THE DETAILS ON SHEETS 8 AND 9.

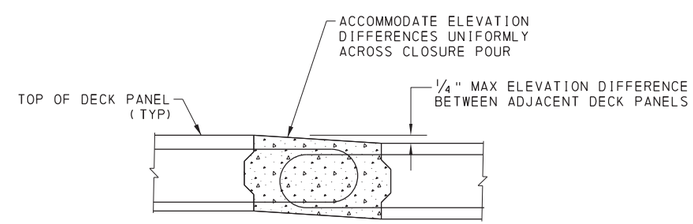

ERECTION TOLERANCE DETAIL

N.T.S.

NOTES:

1. FOR INDEX OF DRAWINGS AND SPECIFICATIONS, SEE SHEET NOS. 1 & 2.
2. FOR DIAPHRAGM DETAILS, SEE SHEET NOS. 6 & 7.
3. FOR GIRDER DETAILS, SEE SHEET NOS. 8 & 9.
4. FOR GIRDER TABLES, SEE SHEET NOS. 11-21.

PENNDOT DRAWING #14-604-BDTD (REV.) 9/2/2014

9/19/2019

DESIGNER		
CDR BRIDGE SYSTEMS D.L. CLARK BUILDING, SUITE 610 503 MARTINDALE STREET PITTSBURGH, PA 15212-5746 P: 412-322-0313 F: 412-322-2138 WEB: www.cdrbridges.com	DATE:	04/08/19
	SCALE:	NOT TO SCALE
	DESIGNED:	RTE
	DRAWN:	RTE
	CHECKED:	WES
	CDR JOB #:	

COMMONWEALTH OF PENNSYLVANIA
DEPARTMENT OF TRANSPORTATION
BUREAU OF PROJECT DELIVERY

CDR BRIDGE SYSTEMS, LLC

FOLDED STEEL PLATE GIRDER SYSTEM

GIRDER TOLERANCES

SHEET 10 OF 21

OPERATOR: Robert.Elliott
FILE PATH: P:\CDR BRIDGE\PROPOSALS\P3672.00-Folded_Steel_Plate_Girder\Design\USTN\PennDOT\10 FSPG Tolerances.dgn

FSPG DESIGNATION: W36 H16 016 A77

NON-COMPOSITE SECTION PROPERTIES			
I_{xx}	S_x TOP	S_x BOT.	r_x
1295 in^4	182.6 in^3	139.5 in^3	6.70 in

N=8 COMPOSITE SECTION PROPERTIES	EFFECTIVE SLAB WIDTH				
	6'-0"	7'-0"	8'-0"	9'-0"	10'-0"
I_{xx}	3980 in^4	4139 in^4	4278 in^4	4401 in^4	4514 in^4
S_x TOP SLAB	567.6 in^3	620.4 in^3	668.9 in^3	713.7 in^3	755.5 in^3
S_x TOP STEEL	-8154.3 in^3	-4995.5 in^3	-3872.5 in^3	-3301.9 in^3	-2959.7 in^3
S_x BOT. STEEL	236.0 in^3	240.6 in^3	244.7 in^3	248.6 in^3	252.2 in^3

NOTE: NEGATIVE S_x TOP STEEL INDICATES TOP FLANGE IS BELOW NEUTRAL AXIS

3N=24 COMPOSITE SECTION PROPERTIES	EFFECTIVE SLAB WIDTH				
	6'-0"	7'-0"	8'-0"	9'-0"	10'-0"
I_{xx}	2880 in^4	3027 in^4	3158 in^4	3275 in^4	3381 in^4
S_x TOP SLAB	292.1 in^3	320.5 in^3	347.6 in^3	373.6 in^3	398.5 in^3
S_x TOP STEEL	1220.5 in^3	1556.1 in^3	1993.9 in^3	2588.5 in^3	3440.9 in^3
S_x BOT. STEEL	205.5 in^3	209.8 in^3	213.5 in^3	216.7 in^3	219.6 in^3

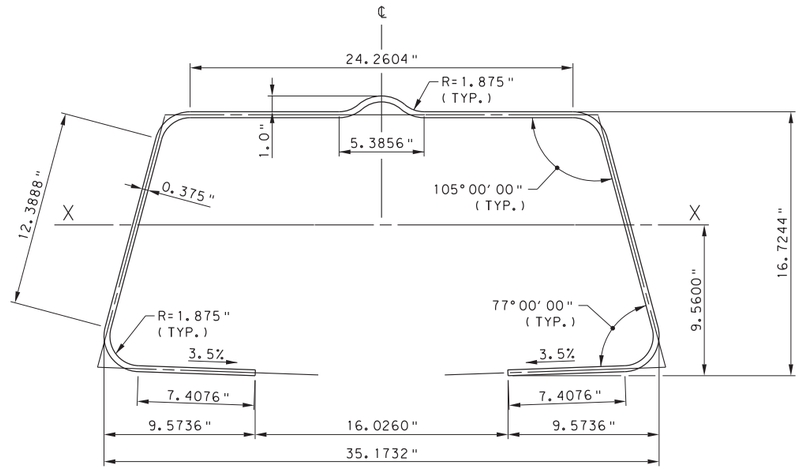

MOMENT CAPACITY	EFFECTIVE SLAB WIDTH				
	6'-0"	7'-0	8'-0"	9'-0"	10'-0"
PLASTIC, M_p	1403 KIP-FT	1453 KIP-FT	1490 KIP-FT	1519 KIP-FT	1543 KIP-FT
NOMINAL, M_n	1260 KIP-FT	1341 KIP-FT	1403 KIP-FT	1452 KIP-FT	1492 KIP-FT

EQUIVALENT PLATE GIRDER FOR STLRFD

TOP FLANGE: 27.5" x 0.375"
WEB: 15.625" x 0.776"
BOTTOM FLANGE: 17.0" x 0.375"

3/8" PLATE INFORMATION

PLATE WIDTH ALONG ℄ PLATE: 77.15 in
AREA: 28.93 in^2
WEIGHT: 98.44 plf

NON-COMPOSITE SECTION PROPERTIES			
I_{xx}	S_x TOP	S_x BOT.	r_x
1672 in^4	236.9 in^3	177.0 in^3	6.66 in

N=8 COMPOSITE SECTION PROPERTIES	EFFECTIVE SLAB WIDTH				
	6'-0"	7'-0"	8'-0"	9'-0"	10'-0"
I_{xx}	4806 in^4	5011 in^4	5190 in^4	5348 in^4	5490 in^4
S_x TOP SLAB	628.8 in^3	689.5 in^3	745.8 in^3	798.3 in^3	847.4 in^3
S_x TOP STEEL	33724.5 in^3	-21545.5 in^3	-9579.6 in^3	-6676.8 in^3	-5375.0 in^3
S_x BOT. STEEL	293.8 in^3	299.5 in^3	304.5 in^3	309.1 in^3	313.3 in^3

NOTE: NEGATIVE S_x TOP STEEL INDICATES TOP FLANGE IS BELOW NEUTRAL AXIS

3N=24 COMPOSITE SECTION PROPERTIES	EFFECTIVE SLAB WIDTH				
	6'-0"	7'-0"	8'-0"	9'-0"	10'-0"
I_{xx}	3416 in^4	3595 in^4	3756 in^4	3902 in^4	4035 in^4
S_x TOP SLAB	324.1 in^3	354.4 in^3	383.7 in^3	411.9 in^3	439.1 in^3
S_x TOP STEEL	1124.3 in^3	1360.7 in^3	1640.7 in^3	1977.2 in^3	2388.9 in^3
S_x BOT. STEEL	253.7 in^3	259.4 in^3	264.3 in^3	268.6 in^3	272.5 in^3

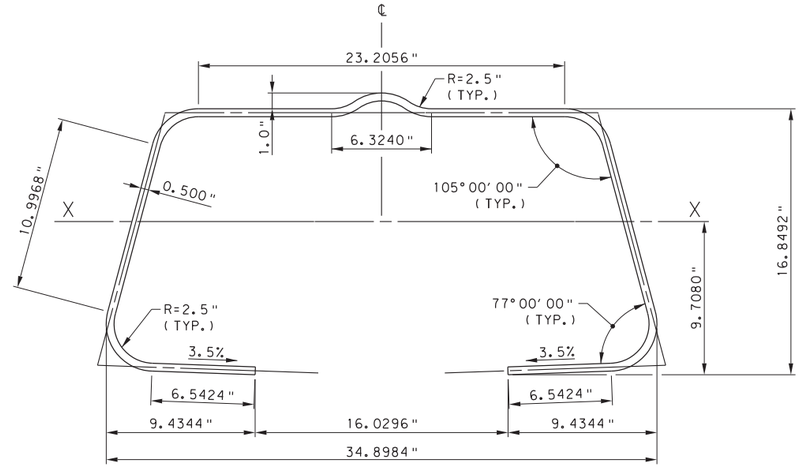

MOMENT CAPACITY	EFFECTIVE SLAB WIDTH				
	6'-0"	7'-0	8'-0"	9'-0"	10'-0"
PLASTIC, M_p	1691 KIP-FT	1776 KIP-FT	1840 KIP-FT	1890 KIP-FT	1930 KIP-FT
NOMINAL, M_n	1439 KIP-FT	1560 KIP-FT	1660 KIP-FT	1740 KIP-FT	1806 KIP-FT

EQUIVALENT PLATE GIRDER FOR STLRFD

TOP FLANGE: 27.5" x 0.5"
WEB: 15.5" x 1.035"
BOTTOM FLANGE: 16.0" x 0.5"

1/2" PLATE INFORMATION

PLATE WIDTH ALONG ℄ PLATE: 75.78 in
AREA: 37.89 in^2
WEIGHT: 128.92 plf

PENNDOT DRAWING #14-604-BDTD (REV.1) 9/2/2014

NOTES:

1. FOR INDEX OF DRAWINGS AND SPECIFICATIONS, SEE SHEET NOS. 1 & 2.
2. PLASTIC MOMENT CALCULATED BASED AASHTO 6.10.7.1.2 (COMPOSITE COMPACT SECTION IN POSITIVE FLEXURE).
3. SECTION PROPERTIES BASED ON A CONCRETE STRENGTH OF 4 KSI AND ASTM A709, GRADE 50 STEEL.
4. SECTION PROPERTIES CONSIDER 8" THICK CONCRETE DECK WITH 1/2" INTEGRAL WEARING SURFACE & 0" HAUNCH.
5. SECTION PROPERTIES ASSUME BOTTOM FLANGES ARE LEVEL.
6. COMPOSITE SECTION PROPERTIES ARE BASED ON EFFECTIVE SLAB WIDTH EXCLUDING THE CLOSURE POUR.

9/19/2019

DESIGNER
CDR BRIDGE SYSTEMS
D.L. CLARK BUILDING, SUITE 610
503 MARTINDALE STREET
PITTSBURGH, PA 15212-5746
P: 412-322-0313
F: 412-322-2138
WEB: www.cdrbridges.com

DATE:	04/08/19
SCALE:	NOT TO SCALE
DESIGNED:	RTE
DRAWN:	RTE
CHECKED:	WES
CDR JOB #:	

COMMONWEALTH OF PENNSYLVANIA
DEPARTMENT OF TRANSPORTATION
BUREAU OF PROJECT DELIVERY

CDR BRIDGE SYSTEMS, LLC
FOLDED STEEL PLATE GIRDER SYSTEM

GIRDER TABLES - 1

PLOTTED: 4/8/2019 8:07:26 AM
OPERATOR: Robert.Elliott
FILE PATH: P:\CDR BRIDGE\PROPOSALS\P3672.00-Folded.Steel.Plate.Girder\Design\USTN\PennDOT\11-21 Beam Tables.dgn

FSPG DESIGNATION: W36 H18 016 A77

NON-COMPOSITE SECTION PROPERTIES			
I_{xx}	S_x TOP	S_x BOT.	r_x
1656 in^4	203.8 in^3	161.7 in^3	7.43 in

N=8 COMPOSITE SECTION PROPERTIES	EFFECTIVE SLAB WIDTH				
	6'-0"	7'-0"	8'-0"	9'-0"	10'-0"
I_{xx}	4894 in^4	5082 in^4	5244 in^4	5387 in^4	5516 in^4
S_x TOP SLAB	659.5 in^3	721.6 in^3	778.7 in^3	831.5 in^3	880.7 in^3
S_x TOP STEEL	-62681.6 in^3	-11114.4 in^3	-6851.3 in^3	-5277.4 in^3	-4463.2 in^3
S_x BOT. STEEL	265.2 in^3	269.9 in^3	274.0 in^3	277.8 in^3	281.3 in^3

NOTE: NEGATIVE S_x TOP STEEL INDICATES TOP FLANGE IS BELOW NEUTRAL AXIS

3N=24 COMPOSITE SECTION PROPERTIES	EFFECTIVE SLAB WIDTH				
	6'-0"	7'-0"	8'-0"	9'-0"	10'-0"
I_{xx}	3568 in^4	3746 in^4	3905 in^4	4047 in^4	4175 in^4
S_x TOP SLAB	338.0 in^3	370.8 in^3	402.2 in^3	432.4 in^3	461.4 in^3
S_x TOP STEEL	1167.0 in^3	1438.2 in^3	1767.6 in^3	2176.1 in^3	2695.3 in^3
S_x BOT. STEEL	232.9 in^3	237.6 in^3	241.6 in^3	245.0 in^3	248.1 in^3

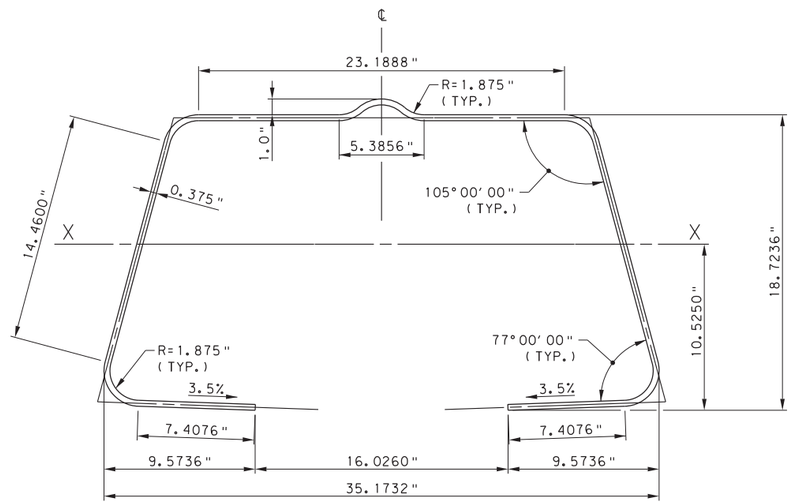

MOMENT CAPACITY	EFFECTIVE SLAB WIDTH				
	6'-0"	7'-0	8'-0"	9'-0"	10'-0"
PLASTIC, M_p	1574 KIP-FT	1628 KIP-FT	1668 KIP-FT	1700 KIP-FT	1725 KIP-FT
NOMINAL, M_n	1425 KIP-FT	1512 KIP-FT	1579 KIP-FT	1632 KIP-FT	1675 KIP-FT

EQUIVALENT PLATE GIRDER FOR STLRFD

TOP FLANGE: 26.25" x 0.375"
WEB: 17.625" x 0.776"
BOTTOM FLANGE: 17.0" x 0.375"

3/8" PLATE INFORMATION

PLATE WIDTH ALONG ℄ PLATE: 80.22 in
AREA: 30.08 in^2
WEIGHT: 102.36 plf

NON-COMPOSITE SECTION PROPERTIES			
I_{xx}	S_x TOP	S_x BOT.	r_x
2140 in^4	264.6 in^3	205.6 in^3	7.38 in

N=8 COMPOSITE SECTION PROPERTIES	EFFECTIVE SLAB WIDTH				
	6'-0"	7'-0"	8'-0"	9'-0"	10'-0"
I_{xx}	5925 in^4	6171 in^4	6383 in^4	6570 in^4	6737 in^4
S_x TOP SLAB	729.4 in^3	800.7 in^3	866.8 in^3	928.6 in^3	986.5 in^3
S_x TOP STEEL	9506.8 in^3	29760.4 in^3	-46825.9 in^3	-15455.8 in^3	-10038.2 in^3
S_x BOT. STEEL	331.5 in^3	337.3 in^3	342.5 in^3	347.1 in^3	351.4 in^3

NOTE: NEGATIVE S_x TOP STEEL INDICATES TOP FLANGE IS BELOW NEUTRAL AXIS

3N=24 COMPOSITE SECTION PROPERTIES	EFFECTIVE SLAB WIDTH				
	6'-0"	7'-0"	8'-0"	9'-0"	10'-0"
I_{xx}	4241 in^4	4459 in^4	4654 in^4	4832 in^4	4994 in^4
S_x TOP SLAB	375.5 in^3	410.4 in^3	444.1 in^3	476.7 in^3	508.2 in^3
S_x TOP STEEL	1117.5 in^3	1324.9 in^3	1561.1 in^3	1832.3 in^3	2146.8 in^3
S_x BOT. STEEL	288.4 in^3	294.6 in^3	299.9 in^3	304.6 in^3	308.8 in^3

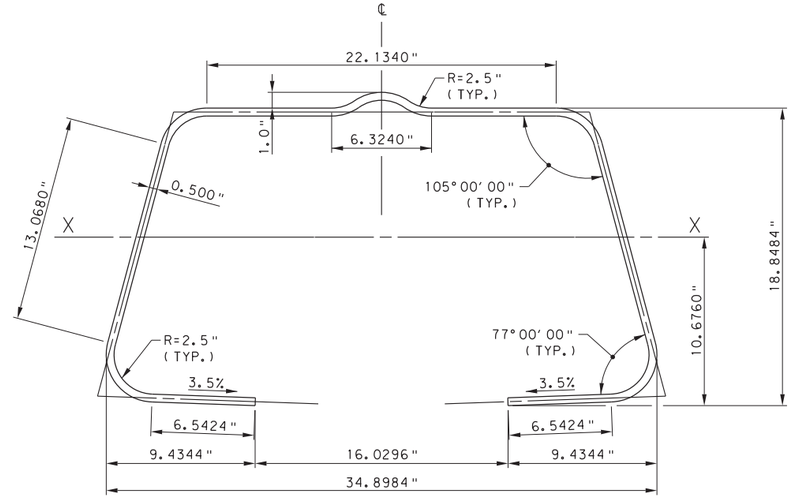

MOMENT CAPACITY	EFFECTIVE SLAB WIDTH				
	6'-0"	7'-0	8'-0"	9'-0"	10'-0"
PLASTIC, M_p	1906 KIP-FT	1994 KIP-FT	2064 KIP-FT	2118 KIP-FT	2161 KIP-FT
NOMINAL, M_n	1652 KIP-FT	1767 KIP-FT	1876 KIP-FT	1963 KIP-FT	2034 KIP-FT

EQUIVALENT PLATE GIRDER FOR STLRFD

TOP FLANGE: 26.25" x 0.5"
WEB: 17.5" x 1.035"
BOTTOM FLANGE: 16.0" x 0.5"

1/2" PLATE INFORMATION

PLATE WIDTH ALONG ℄ PLATE: 78.85 in
AREA: 39.43 in^2
WEIGHT: 134.16 plf

PENNDOT DRAWING #14-604-BDTD (REV.1) 9/2/2014

NOTES:

1. FOR INDEX OF DRAWINGS AND SPECIFICATIONS, SEE SHEET NOS. 1 & 2.
2. PLASTIC MOMENT CALCULATED BASED AASHTO 6.10.7.1.2 (COMPOSITE COMPACT SECTION IN POSITIVE FLEXURE).
3. SECTION PROPERTIES BASED ON A CONCRETE STRENGTH OF 4 KSI AND ASTM A709, GRADE 50 STEEL.
4. SECTION PROPERTIES CONSIDER 8" THICK CONCRETE DECK WITH 1/2" INTEGRAL WEARING SURFACE & 0" HAUNCH.
5. SECTION PROPERTIES ASSUME BOTTOM FLANGES ARE LEVEL.
6. COMPOSITE SECTION PROPERTIES ARE BASED ON EFFECTIVE SLAB WIDTH EXCLUDING THE CLOSURE POUR.

9/18/2019

DESIGNER
CDR BRIDGE SYSTEMS
D.L. CLARK BUILDING, SUITE 610
503 MARTINDALE STREET
PITTSBURGH, PA 15212-5746
P: 412-322-0313
F: 412-322-2138
WEB: www.cdrbridges.com

DATE:	04/08/19
SCALE:	NOT TO SCALE
DESIGNED:	RTE
DRAWN:	RTE
CHECKED:	WES
CDR JOB #:	

COMMONWEALTH OF PENNSYLVANIA
DEPARTMENT OF TRANSPORTATION
BUREAU OF PROJECT DELIVERY

CDR BRIDGE SYSTEMS, LLC
FOLDED STEEL PLATE GIRDER SYSTEM

GIRDER TABLES - 2

PLOTTED: 4/8/2019 8:07:52 AM
OPERATOR: Robert.Elliott
FILE PATH: P:\CDR BRIDGE\PROPOSALS\P3672.00-Folded_Steel_Plate_Girder\Design\USTN\PennDOT\11-21 Beam Tables.dgn

FSPG DESIGNATION: W36 H20 016 A77

NON-COMPOSITE SECTION PROPERTIES			
I_{xx}	S_x TOP	S_x BOT.	r_x
2065 in^4	224.8 in^3	184.6 in^3	8.14 in

N=8 COMPOSITE SECTION PROPERTIES	EFFECTIVE SLAB WIDTH				
	6'-0"	7'-0"	8'-0"	9'-0"	10'-0"
I_{xx}	5938 in^4	6159 in^4	6349 in^4	6516 in^4	6665 in^4
S_x TOP SLAB	756.1 in^3	828.5 in^3	895.2 in^3	956.9 in^3	1014.4 in^3
S_x TOP STEEL	16777.3 in^3	-94237.2 in^3	-15603.5 in^3	-9436.3 in^3	-7168.2 in^3
S_x BOT. STEEL	296.6 in^3	301.3 in^3	305.5 in^3	309.3 in^3	312.8 in^3

NOTE: NEGATIVE S_x TOP STEEL INDICATES TOP FLANGE IS BELOW NEUTRAL AXIS

3N=24 COMPOSITE SECTION PROPERTIES	EFFECTIVE SLAB WIDTH				
	6'-0"	7'-0"	8'-0"	9'-0"	10'-0"
I_{xx}	4347 in^4	4562 in^4	4753 in^4	4924 in^4	5078 in^4
S_x TOP SLAB	385.3 in^3	422.7 in^3	458.7 in^3	493.3 in^3	526.7 in^3
S_x TOP STEEL	1149.2 in^3	1385.7 in^3	1660.7 in^3	1984.5 in^3	2370.9 in^3
S_x BOT. STEEL	262.0 in^3	267.1 in^3	271.4 in^3	275.2 in^3	278.5 in^3

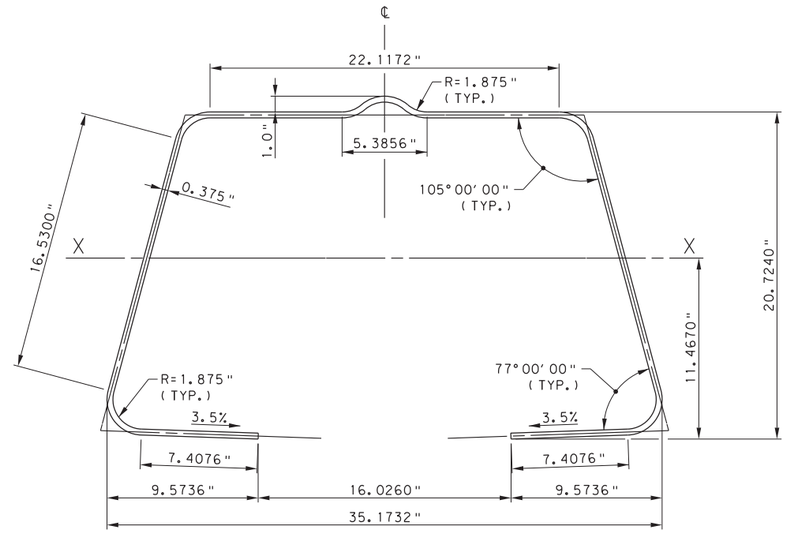

MOMENT CAPACITY	EFFECTIVE SLAB WIDTH				
	6'-0"	7'-0	8'-0"	9'-0"	10'-0"
PLASTIC, M_p	1756 KIP-FT	1815 KIP-FT	1858 KIP-FT	1892 KIP-FT	1919 KIP-FT
NOMINAL, M_n	1600 KIP-FT	1695 KIP-FT	1767 KIP-FT	1824 KIP-FT	1871 KIP-FT

EQUIVALENT PLATE GIRDER FOR STLRFD

TOP FLANGE: 25.25" x 0.375"
WEB: 19.625" x 0.776"
BOTTOM FLANGE: 17.0" x 0.375"

3/8" PLATE INFORMATION

PLATE WIDTH ALONG ℄ PLATE: 83.29 in
AREA: 31.23 in^2
WEIGHT: 106.28 plf

NON-COMPOSITE SECTION PROPERTIES			
I_{xx}	S_x TOP	S_x BOT.	r_x
2671 in^4	292.1 in^3	235.2 in^3	8.09 in

N=8 COMPOSITE SECTION PROPERTIES	EFFECTIVE SLAB WIDTH				
	6'-0"	7'-0"	8'-0"	9'-0"	10'-0"
I_{xx}	7202 in^4	7495 in^4	7747 in^4	7968 in^4	8163 in^4
S_x TOP SLAB	834.6 in^3	917.3 in^3	994.3 in^3	1066.3 in^3	1133.9 in^3
S_x TOP STEEL	6380.4 in^3	11174.5 in^3	26590.4 in^3	-283902.5 in^3	-27149.1 in^3
S_x BOT. STEEL	371.8 in^3	378.0 in^3	383.4 in^3	388.1 in^3	392.5 in^3

3N=24 COMPOSITE SECTION PROPERTIES	EFFECTIVE SLAB WIDTH				
	6'-0"	7'-0"	8'-0"	9'-0"	10'-0"
I_{xx}	5176 in^4	5437 in^4	5673 in^4	5887 in^4	6082 in^4
S_x TOP SLAB	428.4 in^3	468.0 in^3	506.4 in^3	543.7 in^3	579.8 in^3
S_x TOP STEEL	1129.8 in^3	1320.6 in^3	1532.3 in^3	1768.5 in^3	2033.5 in^3
S_x BOT. STEEL	325.1 in^3	331.9 in^3	337.7 in^3	342.9 in^3	347.4 in^3

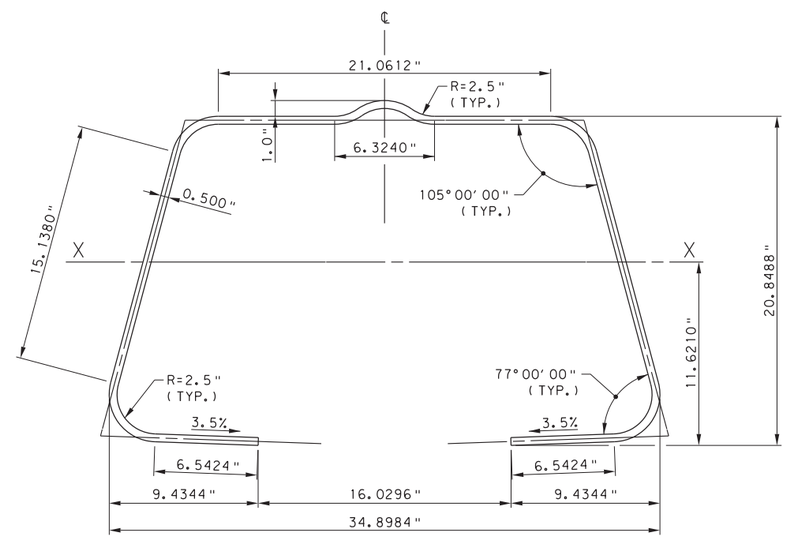

MOMENT CAPACITY	EFFECTIVE SLAB WIDTH				
	6'-0"	7'-0	8'-0"	9'-0"	10'-0"
PLASTIC, M_p	2138 KIP-FT	2229 KIP-FT	2304 KIP-FT	2363 KIP-FT	2409 KIP-FT
NOMINAL, M_n	1882 KIP-FT	1989 KIP-FT	2107 KIP-FT	2201 KIP-FT	2278 KIP-FT

EQUIVALENT PLATE GIRDER FOR STLRFD

TOP FLANGE: 25.25" x 0.5"
WEB: 19.5" x 1.035"
BOTTOM FLANGE: 16.0" x 0.5"

1/2" PLATE INFORMATION

PLATE WIDTH ALONG ℄ PLATE: 81.92 in
AREA: 40.97 in^2
WEIGHT: 139.41 plf

PENNDOT DRAWING #14-604-BDTD (REV.1) 9/2/2014

NOTES:

1. FOR INDEX OF DRAWINGS AND SPECIFICATIONS, SEE SHEET NOS. 1 & 2.
2. PLASTIC MOMENT CALCULATED BASED AASHTO 6.10.7.1.2 (COMPOSITE COMPACT SECTION IN POSITIVE FLEXURE).
3. SECTION PROPERTIES BASED ON A CONCRETE STRENGTH OF 4 KSI AND ASTM A709, GRADE 50 STEEL.
4. SECTION PROPERTIES CONSIDER 8" THICK CONCRETE DECK WITH 1/2" INTEGRAL WEARING SURFACE & 0" HAUNCH.
5. SECTION PROPERTIES ASSUME BOTTOM FLANGES ARE LEVEL.
6. COMPOSITE SECTION PROPERTIES ARE BASED ON EFFECTIVE SLAB WIDTH EXCLUDING THE CLOSURE POUR.

9/19/2019

DESIGNER
CDR BRIDGE SYSTEMS
D.L. CLARK BUILDING, SUITE 610
503 MARTINDALE STREET
PITTSBURGH, PA 15212-5746
P: 412-322-0313
F: 412-322-2138
WEB: www.cdrbridges.com

DATE:	04/08/19
SCALE:	NOT TO SCALE
DESIGNED:	RTE
DRAWN:	RTE
CHECKED:	WES
CDR JOB #:	

COMMONWEALTH OF PENNSYLVANIA
DEPARTMENT OF TRANSPORTATION
BUREAU OF PROJECT DELIVERY

CDR BRIDGE SYSTEMS, LLC
FOLDED STEEL PLATE GIRDER SYSTEM

GIRDER TABLES - 3

PLOTTED: 4/8/2019 8:08:20 AM
OPERATOR: Robert.Elliott
FILE PATH: P:\CDR BRIDGE\PROPOSALS\P3672.00-Folded_Steel_Plate_Girder\Design\USTN\PennDOT\11-21 Beam Tables.dgn

FSPG DESIGNATION: W40 H20 016 A77

NON-COMPOSITE SECTION PROPERTIES			
I_{xx}	S_x TOP	S_x BOT.	r_x
2368 in^4	255.3 in^3	213.3 in^3	8.33 in

N=8 COMPOSITE SECTION PROPERTIES	EFFECTIVE SLAB WIDTH				
	6'-0"	7'-0"	8'-0"	9'-0"	10'-0"
I_{xx}	6520 in^4	6766 in^4	6978 in^4	7163 in^4	7328 in^4
S_x TOP SLAB	800.4 in^3	877.8 in^3	949.3 in^3	1015.8 in^3	1077.8 in^3
S_x TOP STEEL	10100.0 in^3	32466.6 in^3	-46639.1 in^3	-15980.3 in^3	-10451.6 in^3
S_x BOT. STEEL	330.5 in^3	335.5 in^3	340.0 in^3	344.0 in^3	347.7 in^3

NOTE: NEGATIVE S_x TOP STEEL INDICATES TOP FLANGE IS BELOW NEUTRAL AXIS

3N=24 COMPOSITE SECTION PROPERTIES	EFFECTIVE SLAB WIDTH				
	6'-0"	7'-0"	8'-0"	9'-0"	10'-0"
I_{xx}	4764 in^4	4998 in^4	5206 in^4	5394 in^4	5564 in^4
S_x TOP SLAB	409.9 in^3	448.8 in^3	486.3 in^3	522.5 in^3	557.5 in^3
S_x TOP STEEL	1155.4 in^3	1374.5 in^3	1624.1 in^3	1910.9 in^3	2243.6 in^3
S_x BOT. STEEL	293.1 in^3	298.6 in^3	303.2 in^3	307.3 in^3	310.9 in^3

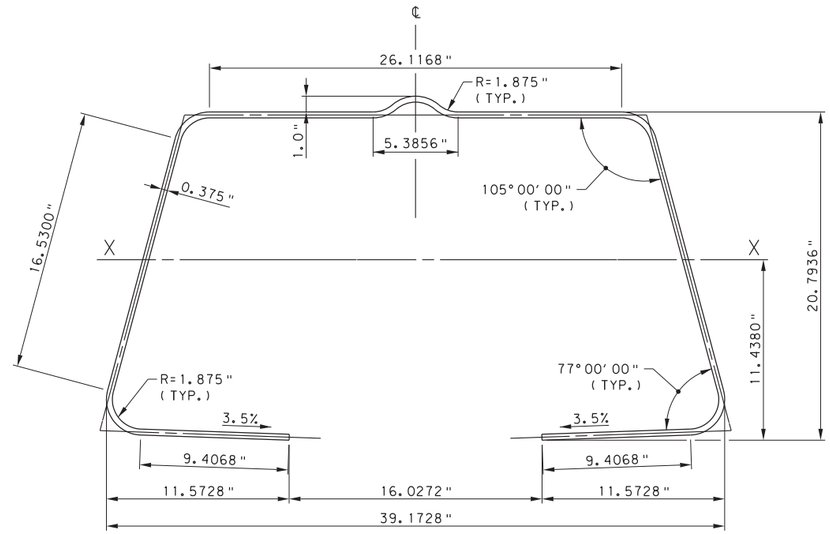

MOMENT CAPACITY	EFFECTIVE SLAB WIDTH				
	6'-0"	7'-0	8'-0"	9'-0"	10'-0"
PLASTIC, M_p	1895 KIP-FT	1965 KIP-FT	2017 KIP-FT	2058 KIP-FT	2091 KIP-FT
NOMINAL, M_n	1697 KIP-FT	1809 KIP-FT	1895 KIP-FT	1963 KIP-FT	2019 KIP-FT

EQUIVALENT PLATE GIRDER FOR STLRFD

TOP FLANGE: 29.25" x 0.375"
WEB: 19.625" x 0.776"
BOTTOM FLANGE: 21.0" x 0.375"

3/8" PLATE INFORMATION

PLATE WIDTH ALONG ℄ PLATE: 91.29 in
AREA: 34.23 in^2
WEIGHT: 116.47 plf

NON-COMPOSITE SECTION PROPERTIES			
I_{xx}	S_x TOP	S_x BOT.	r_x
3075 in^4	332.8 in^3	273.2 in^3	8.28 in

N=8 COMPOSITE SECTION PROPERTIES	EFFECTIVE SLAB WIDTH				
	6'-0"	7'-0"	8'-0"	9'-0"	10'-0"
I_{xx}	7923 in^4	8250 in^4	8532 in^4	8779 in^4	8997 in^4
S_x TOP SLAB	884.7 in^3	972.7 in^3	1054.9 in^3	1132.0 in^3	1204.6 in^3
S_x TOP STEEL	5445.3 in^3	8399.6 in^3	14504.9 in^3	34455.7 in^3	-289632.1 in^3
S_x BOT. STEEL	416.0 in^3	422.7 in^3	428.5 in^3	433.6 in^3	438.2 in^3

3N=24 COMPOSITE SECTION PROPERTIES	EFFECTIVE SLAB WIDTH				
	6'-0"	7'-0"	8'-0"	9'-0"	10'-0"
I_{xx}	5697 in^4	5980 in^4	6236 in^4	6469 in^4	6683 in^4
S_x TOP SLAB	458.7 in^3	499.8 in^3	539.7 in^3	578.5 in^3	616.2 in^3
S_x TOP STEEL	1158.1 in^3	1339.6 in^3	1538.4 in^3	1756.8 in^3	1997.9 in^3
S_x BOT. STEEL	365.6 in^3	372.9 in^3	379.1 in^3	384.7 in^3	389.6 in^3

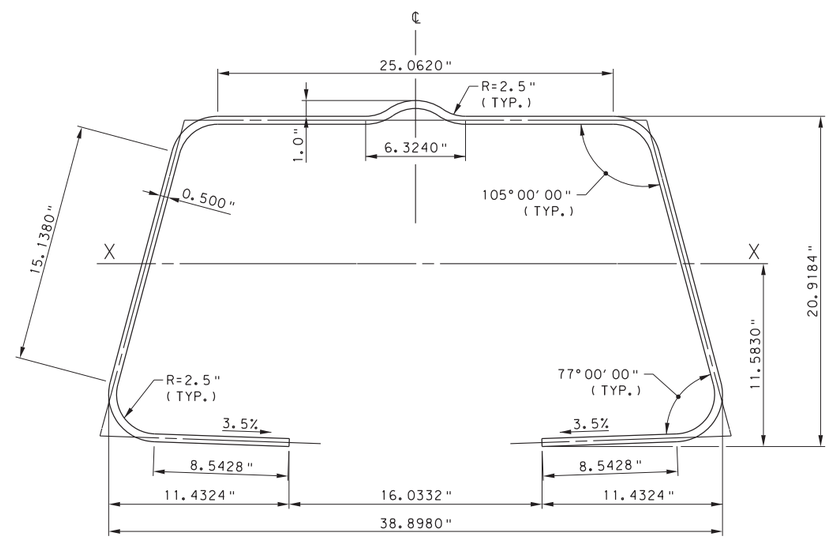

MOMENT CAPACITY	EFFECTIVE SLAB WIDTH				
	6'-0"	7'-0	8'-0"	9'-0"	10'-0"
PLASTIC, M_p	2309 KIP-FT	2403 KIP-FT	2491 KIP-FT	2562 KIP-FT	2618 KIP-FT
NOMINAL, M_n	2029 KIP-FT	2119 KIP-FT	2240 KIP-FT	2352 KIP-FT	2444 KIP-FT

EQUIVALENT PLATE GIRDER FOR STLRFD

TOP FLANGE: 29.25" x 0.5"
WEB: 19.5" x 1.035"
BOTTOM FLANGE: 20.0" x 0.5"

1/2" PLATE INFORMATION

PLATE WIDTH ALONG ℄ PLATE: 89.92 in
AREA: 44.96 in^2
WEIGHT: 152.98 plf

PENNDOT DRAWING #14-604-BDTD (REV.1) 9/2/2014

NOTES:

1. FOR INDEX OF DRAWINGS AND SPECIFICATIONS, SEE SHEET NOS. 1 & 2.
2. PLASTIC MOMENT CALCULATED BASED AASHTO 6.10.7.1.2 (COMPOSITE COMPACT SECTION IN POSITIVE FLEXURE).
3. SECTION PROPERTIES BASED ON A CONCRETE STRENGTH OF 4 KSI AND ASTM A709, GRADE 50 STEEL.
4. SECTION PROPERTIES CONSIDER 8" THICK CONCRETE DECK WITH 1/2" INTEGRAL WEARING SURFACE & 0" HAUNCH.
5. SECTION PROPERTIES ASSUME BOTTOM FLANGES ARE LEVEL.
6. COMPOSITE SECTION PROPERTIES ARE BASED ON EFFECTIVE SLAB WIDTH EXCLUDING THE CLOSURE POUR.

9/19/2019

DESIGNER
CDR BRIDGE SYSTEMS
D.L. CLARK BUILDING, SUITE 610
503 MARTINDALE STREET
PITTSBURGH, PA 15212-5746
P: 412-322-0313
F: 412-322-2138
WEB: www.cdrbridges.com

DATE:	04/08/19
SCALE:	NOT TO SCALE
DESIGNED:	RTE
DRAWN:	RTE
CHECKED:	WES
CDR JOB #:	

COMMONWEALTH OF PENNSYLVANIA
DEPARTMENT OF TRANSPORTATION
BUREAU OF PROJECT DELIVERY

CDR BRIDGE SYSTEMS, LLC
FOLDED STEEL PLATE GIRDER SYSTEM

GIRDER TABLES - 4

PLOTTED: 4/8/2019 8:08:39 AM
OPERATOR: Robert.Elliott
FILE PATH: P:\CDR BRIDGE\PROPOSALS\P3672.00-Folded_Steel_Plate_Girder\Design\USTN\PennDOT\11-21 Beam Tables.dgn

FSPG DESIGNATION: W40 H24 016 A77

NON-COMPOSITE SECTION PROPERTIES			
I_{xx}	S_x TOP	S_x BOT.	r_x
3459 in^4	302.5 in^3	267.2 in^3	9.74 in

N=8 COMPOSITE SECTION PROPERTIES	EFFECTIVE SLAB WIDTH				
	6'-0"	7'-0"	8'-0"	9'-0"	10'-0"
I_{xx}	9215 in^4	9555 in^4	9845 in^4	10096 in^4	10317 in^4
S_x TOP SLAB	1012.9 in^3	1114.2 in^3	1208.3 in^3	1296.2 in^3	1378.4 in^3
S_x TOP STEEL	5769.2 in^3	8879.2 in^3	15201.4 in^3	34933.6 in^3	-663365.4 in^3
S_x BOT. STEEL	404.5 in^3	410.1 in^3	414.9 in^3	419.2 in^3	423.0 in^3

3N=24 COMPOSITE SECTION PROPERTIES	EFFECTIVE SLAB WIDTH				
	6'-0"	7'-0"	8'-0"	9'-0"	10'-0"
I_{xx}	6756 in^4	7084 in^4	7377 in^4	7640 in^4	7879 in^4
S_x TOP SLAB	513.3 in^3	562.2 in^3	609.5 in^3	655.3 in^3	699.8 in^3
S_x TOP STEEL	1193.3 in^3	1388.7 in^3	1602.4 in^3	1837.1 in^3	2095.9 in^3
S_x BOT. STEEL	361.0 in^3	367.5 in^3	373.1 in^3	377.9 in^3	382.2 in^3

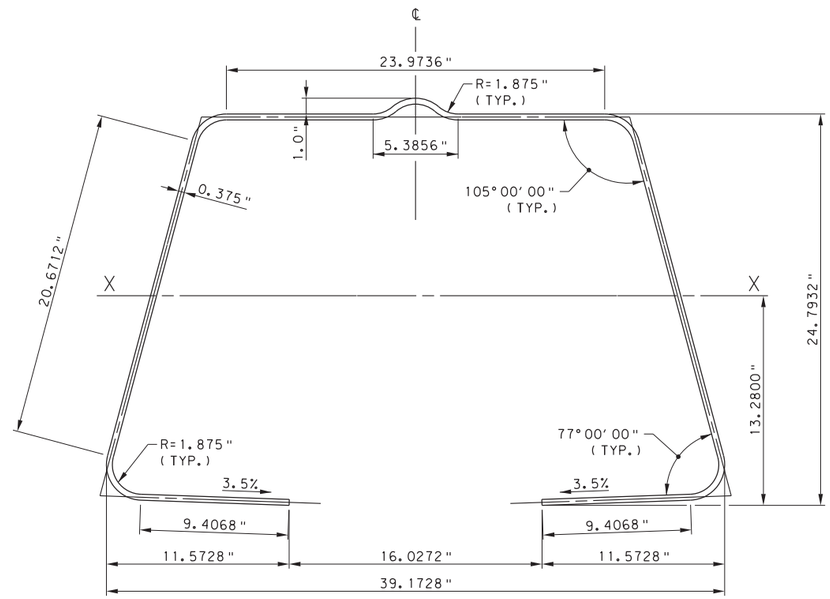

MOMENT CAPACITY	EFFECTIVE SLAB WIDTH				
	6'-0"	7'-0	8'-0"	9'-0"	10'-0"
PLASTIC, M_p	2314 KIP-FT	2394 KIP-FT	2454 KIP-FT	2501 KIP-FT	2538 KIP-FT
NOMINAL, M_n	2100 KIP-FT	2228 KIP-FT	2326 KIP-FT	2405 KIP-FT	2468 KIP-FT

EQUIVALENT PLATE GIRDER FOR STLRFD

TOP FLANGE: 27.25" x 0.375"
WEB: 23.625" x 0.776"
BOTTOM FLANGE: 21.0" x 0.375"

3/8" PLATE INFORMATION

PLATE WIDTH ALONG ℄ PLATE: 97.43 in
AREA: 36.53 in^2
WEIGHT: 124.31 plf

NON-COMPOSITE SECTION PROPERTIES			
I_{xx}	S_x TOP	S_x BOT.	r_x
4498 in^4	394.8 in^3	343.2 in^3	9.69 in

N=8 COMPOSITE SECTION PROPERTIES	EFFECTIVE SLAB WIDTH				
	6'-0"	7'-0"	8'-0"	9'-0"	10'-0"
I_{xx}	11217 in^4	11675 in^4	12066 in^4	12407 in^4	12707 in^4
S_x TOP SLAB	1115.1 in^3	1228.9 in^3	1336.0 in^3	1436.9 in^3	1532.4 in^3
S_x TOP STEEL	4382.9 in^3	5836.8 in^3	7875.6 in^3	10935.9 in^3	16032.7 in^3
S_x BOT. STEEL	511.2 in^3	518.9 in^3	525.4 in^3	531.0 in^3	536.0 in^3

3N=24 COMPOSITE SECTION PROPERTIES	EFFECTIVE SLAB WIDTH				
	6'-0"	7'-0"	8'-0"	9'-0"	10'-0"
I_{xx}	8096 in^4	8491 in^4	8849 in^4	9176 in^4	9476 in^4
S_x TOP SLAB	575.2 in^3	626.4 in^3	676.3 in^3	725.0 in^3	772.5 in^3
S_x TOP STEEL	1231.5 in^3	1402.4 in^3	1584.6 in^3	1779.2 in^3	1987.6 in^3
S_x BOT. STEEL	451.7 in^3	460.3 in^3	467.8 in^3	474.4 in^3	480.2 in^3

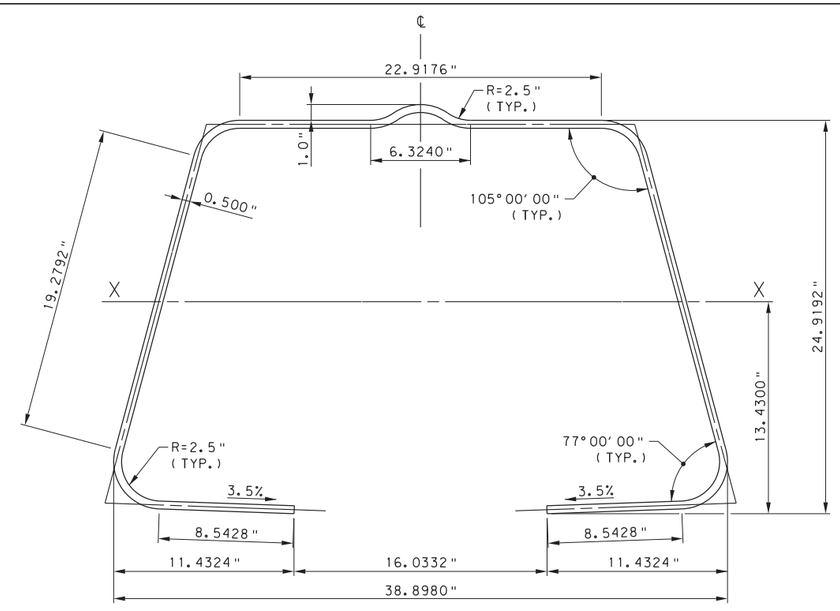

MOMENT CAPACITY	EFFECTIVE SLAB WIDTH				
	6'-0"	7'-0	8'-0"	9'-0"	10'-0"
PLASTIC, M_p	2854 KIP-FT	2952 KIP-FT	3044 KIP-FT	3125 KIP-FT	3189 KIP-FT
NOMINAL, M_n	2570 KIP-FT	2667 KIP-FT	2771 KIP-FT	2900 KIP-FT	3005 KIP-FT

EQUIVALENT PLATE GIRDER FOR STLRFD

TOP FLANGE: 27.25" x 0.5"
WEB: 23.5" x 1.035"
BOTTOM FLANGE: 20.0" x 0.5"

1/2" PLATE INFORMATION

PLATE WIDTH ALONG ℄ PLATE: 96.06 in
AREA: 48.04 in^2
WEIGHT: 163.46 plf

PENNDOT DRAWING #14-604-BDTD (REV.1) 9/2/2014

NOTES:

1. FOR INDEX OF DRAWINGS AND SPECIFICATIONS, SEE SHEET NOS. 1 & 2.
2. PLASTIC MOMENT CALCULATED BASED AASHTO 6.10.7.1.2 (COMPOSITE COMPACT SECTION IN POSITIVE FLEXURE).
3. SECTION PROPERTIES BASED ON A CONCRETE STRENGTH OF 4 KSI AND ASTM A709, GRADE 50 STEEL.
4. SECTION PROPERTIES CONSIDER 8" THICK CONCRETE DECK WITH 1/2" INTEGRAL WEARING SURFACE & 0" HAUNCH.
5. SECTION PROPERTIES ASSUME BOTTOM FLANGES ARE LEVEL.
6. COMPOSITE SECTION PROPERTIES ARE BASED ON EFFECTIVE SLAB WIDTH EXCLUDING THE CLOSURE POUR.

9/19/2019

DESIGNER
CDR BRIDGE SYSTEMS
D.L. CLARK BUILDING, SUITE 610
503 MARTINDALE STREET
PITTSBURGH, PA 15212-5746
P: 412-322-0313
F: 412-322-2138
WEB: www.cdrbridges.com

DATE:	04/08/19
SCALE:	NOT TO SCALE
DESIGNED:	RTE
DRAWN:	RTE
CHECKED:	WES
CDR JOB #:	

COMMONWEALTH OF PENNSYLVANIA
DEPARTMENT OF TRANSPORTATION
BUREAU OF PROJECT DELIVERY

CDR BRIDGE SYSTEMS, LLC
FOLDED STEEL PLATE GIRDER SYSTEM

GIRDER TABLES - 5

PLOTTED: 4/8/2019 8:09:03 AM
OPERATOR: Robert.Elliott
FILE PATH: P:\CDR BRIDGE\PROPOSALS\P3672.00-Folded.Steel_Plate.Girder\Design\USTN\PennDOT\11-21 Beam Tables.dgn

FSPG DESIGNATION: W40 H28 016 A77

NON-COMPOSITE SECTION PROPERTIES			
I_{xx}	S_x TOP	S_x BOT.	r_x
4766 in^4	349.1 in^3	323.7 in^3	11.09 in

N=8 COMPOSITE SECTION PROPERTIES	EFFECTIVE SLAB WIDTH				
	6'-0"	7'-0"	8'-0"	9'-0"	10'-0"
I_{xx}	12518 in^4	12981 in^4	13372 in^4	13709 in^4	14004 in^4
S_x TOP SLAB	1236.3 in^3	1364.1 in^3	1483.6 in^3	1595.7 in^3	1701.2 in^3
S_x TOP STEEL	4768.6 in^3	6438.8 in^3	8836.8 in^3	12564.5 in^3	19140.2 in^3
S_x BOT. STEEL	486.1 in^3	492.5 in^3	497.8 in^3	502.5 in^3	506.6 in^3

3N=24 COMPOSITE SECTION PROPERTIES	EFFECTIVE SLAB WIDTH				
	6'-0"	7'-0"	8'-0"	9'-0"	10'-0"
I_{xx}	9163 in^4	9608 in^4	10007 in^4	10366 in^4	10692 in^4
S_x TOP SLAB	619.6 in^3	678.8 in^3	736.4 in^3	792.4 in^3	847.0 in^3
S_x TOP STEEL	1257.3 in^3	1444.0 in^3	1643.5 in^3	1857.2 in^3	2086.6 in^3
S_x BOT. STEEL	434.6 in^3	442.4 in^3	449.0 in^3	454.8 in^3	459.9 in^3

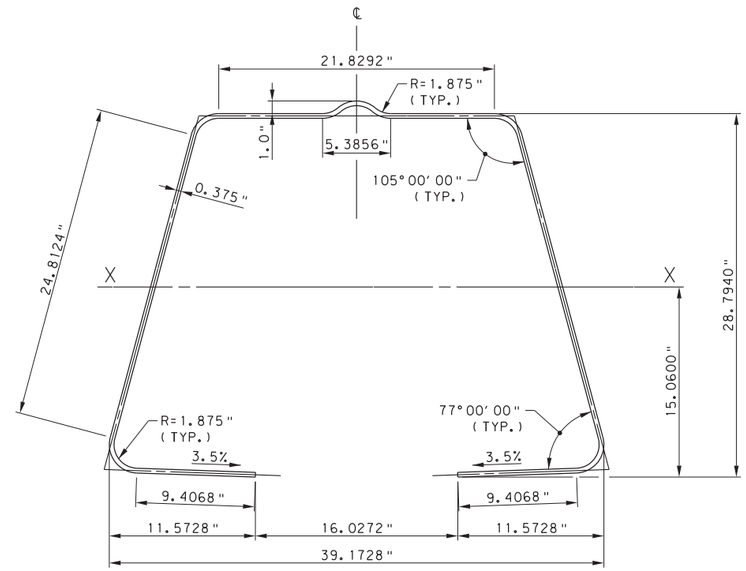

MOMENT CAPACITY	EFFECTIVE SLAB WIDTH				
	6'-0"	7'-0	8'-0"	9'-0"	10'-0"
PLASTIC, M_p	2784 KIP-FT	2872 KIP-FT	2939 KIP-FT	2992 KIP-FT	3034 KIP-FT
NOMINAL, M_n	2569 KIP-FT	2694 KIP-FT	2806 KIP-FT	2895 KIP-FT	2967 KIP-FT

EQUIVALENT PLATE GIRDER FOR STLRFD

TOP FLANGE: 25.0" x 0.375"
WEB: 27.625" x 0.776"
BOTTOM FLANGE: 21.0" x 0.375"

3/8" PLATE INFORMATION

PLATE WIDTH ALONG ℄ PLATE: 103.57 in
AREA: 38.84 in^2
WEIGHT: 132.15 plf

NON-COMPOSITE SECTION PROPERTIES			
I_{xx}	S_x TOP	S_x BOT.	r_x
6205 in^4	455.9 in^3	416.7 in^3	11.04 in

N=8 COMPOSITE SECTION PROPERTIES	EFFECTIVE SLAB WIDTH				
	6'-0"	7'-0"	8'-0"	9'-0"	10'-0"
I_{xx}	15243 in^4	15869 in^4	16404 in^4	16867 in^4	17274 in^4
S_x TOP SLAB	1355.4 in^3	1497.4 in^3	1631.7 in^3	1759.2 in^3	1880.3 in^3
S_x TOP STEEL	4068.6 in^3	5122.3 in^3	6425.8 in^3	8078.3 in^3	10239.6 in^3
S_x BOT. STEEL	615.8 in^3	624.7 in^3	632.2 in^3	638.6 in^3	644.2 in^3

3N=24 COMPOSITE SECTION PROPERTIES	EFFECTIVE SLAB WIDTH				
	6'-0"	7'-0"	8'-0"	9'-0"	10'-0"
I_{xx}	10991 in^4	11524 in^4	12010 in^4	12455 in^4	12863 in^4
S_x TOP SLAB	694.8 in^3	756.5 in^3	816.8 in^3	875.8 in^3	933.5 in^3
S_x TOP STEEL	1321.4 in^3	1490.0 in^3	1667.1 in^3	1853.0 in^3	2048.6 in^3
S_x BOT. STEEL	544.6 in^3	555.0 in^3	564.0 in^3	571.9 in^3	578.9 in^3

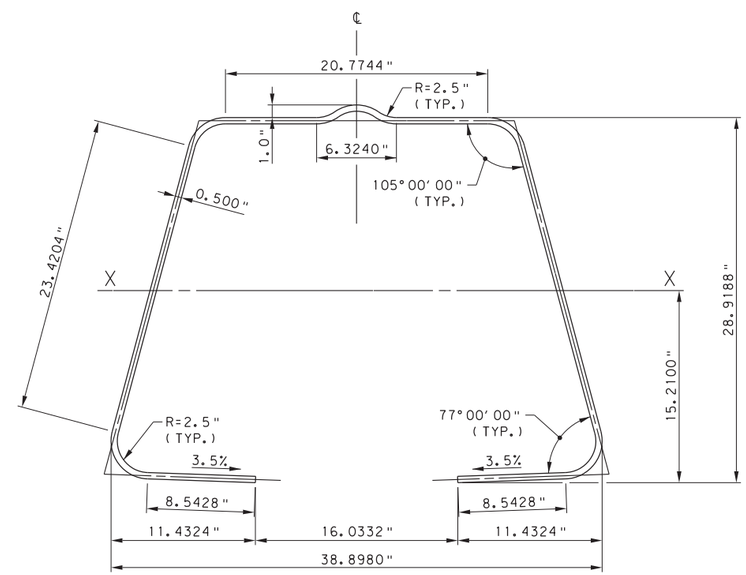

MOMENT CAPACITY	EFFECTIVE SLAB WIDTH				
	6'-0"	7'-0	8'-0"	9'-0"	10'-0"
PLASTIC, M_p	3465 KIP-FT	3567 KIP-FT	3662 KIP-FT	3751 KIP-FT	3824 KIP-FT
NOMINAL, M_n	3179 KIP-FT	3284 KIP-FT	3382 KIP-FT	3510 KIP-FT	3630 KIP-FT

EQUIVALENT PLATE GIRDER FOR STLRFD

TOP FLANGE: 25.0" x 0.5"
WEB: 27.5" x 1.035"
BOTTOM FLANGE: 20.0" x 0.5"

1/2" PLATE INFORMATION

PLATE WIDTH ALONG ℄ PLATE: 102.20 in
AREA: 51.11 in^2
WEIGHT: 173.90 plf

PENNDOT DRAWING #14-604-BDTD (REV.1) 9/2/2014

NOTES:

1. FOR INDEX OF DRAWINGS AND SPECIFICATIONS, SEE SHEET NOS. 1 & 2.
2. PLASTIC MOMENT CALCULATED BASED AASHTO 6.10.7.1.2 (COMPOSITE COMPACT SECTION IN POSITIVE FLEXURE).
3. SECTION PROPERTIES BASED ON A CONCRETE STRENGTH OF 4 KSI AND ASTM A709, GRADE 50 STEEL.
4. SECTION PROPERTIES CONSIDER 8" THICK CONCRETE DECK WITH 1/2" INTEGRAL WEARING SURFACE & 0" HAUNCH.
5. SECTION PROPERTIES ASSUME BOTTOM FLANGES ARE LEVEL.
6. COMPOSITE SECTION PROPERTIES ARE BASED ON EFFECTIVE SLAB WIDTH EXCLUDING THE CLOSURE POUR.

9/19/2019

DESIGNER
CDR BRIDGE SYSTEMS
D.L. CLARK BUILDING, SUITE 610
503 MARTINDALE STREET
PITTSBURGH, PA 15212-5746
P: 412-322-0313
F: 412-322-2138
WEB: www.cdrbridges.com

DATE:	04/08/19
SCALE:	NOT TO SCALE
DESIGNED:	RTE
DRAWN:	RTE
CHECKED:	WES
CDR JOB #:	

COMMONWEALTH OF PENNSYLVANIA
DEPARTMENT OF TRANSPORTATION
BUREAU OF PROJECT DELIVERY

CDR BRIDGE SYSTEMS, LLC
FOLDED STEEL PLATE GIRDER SYSTEM

GIRDER TABLES - 6

PLOTTED: 4/8/2019 8:09:25 AM
OPERATOR: Robert.Elliott
FILE PATH: P:\CDR BRIDGE\PROPOSALS\P3672.00-Folded_Steel_Plate_Girder\Design\USTN\PennDOT\11-21 Beam Tables.dgn

FSPG DESIGNATION: W40 H32 016 A77

NON-COMPOSITE SECTION PROPERTIES			
I_{xx}	S_x TOP	S_x BOT.	r_x
6292 in^4	395.0 in^3	382.6 in^3	12.38 in

N=8 COMPOSITE SECTION PROPERTIES	EFFECTIVE SLAB WIDTH				
	6'-0"	7'-0"	8'-0"	9'-0"	10'-0"
I_{xx}	16465 in^4	17083 in^4	17604 in^4	18051 in^4	18441 in^4
S_x TOP SLAB	1467.0 in^3	1623.3 in^3	1770.4 in^3	1909.2 in^3	2040.5 in^3
S_x TOP STEEL	4421.5 in^3	5649.7 in^3	7204.6 in^3	9234.3 in^3	11993.0 in^3
S_x BOT. STEEL	574.7 in^3	582.0 in^3	588.2 in^3	593.4 in^3	598.0 in^3

3N=24 COMPOSITE SECTION PROPERTIES	EFFECTIVE SLAB WIDTH				
	6'-0"	7'-0"	8'-0"	9'-0"	10'-0"
I_{xx}	12000 in^4	12588 in^4	13117 in^4	13594 in^4	14028 in^4
S_x TOP SLAB	727.6 in^3	797.5 in^3	865.6 in^3	932.2 in^3	997.2 in^3
S_x TOP STEEL	1334.4 in^3	1519.3 in^3	1714.0 in^3	1919.2 in^3	2135.8 in^3
S_x BOT. STEEL	513.2 in^3	522.6 in^3	530.6 in^3	537.5 in^3	543.6 in^3

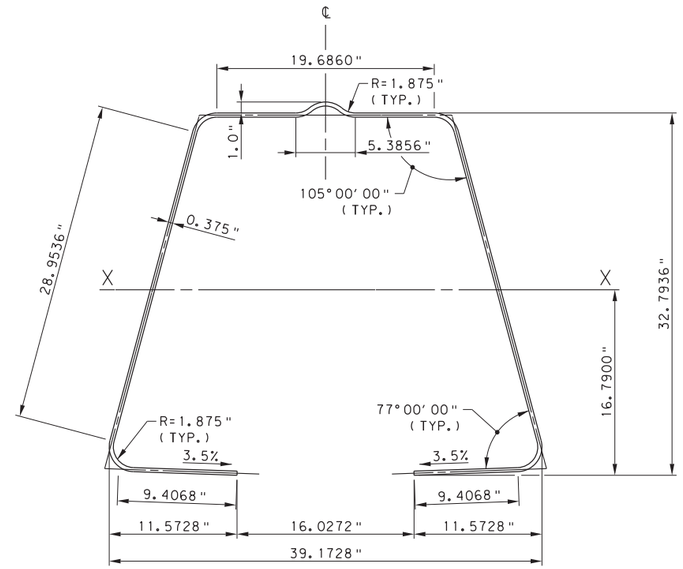

MOMENT CAPACITY	EFFECTIVE SLAB WIDTH				
	6'-0"	7'-0	8'-0"	9'-0"	10'-0"
PLASTIC, M_p	3304 KIP-FT	3397 KIP-FT	3473 KIP-FT	3532 KIP-FT	3580 KIP-FT
NOMINAL, M_n	3094 KIP-FT	3208 KIP-FT	3334 KIP-FT	3434 KIP-FT	3515 KIP-FT

EQUIVALENT PLATE GIRDER FOR STLRFD

TOP FLANGE: 22.75" x 0.375"
WEB: 31.625" x 0.776"
BOTTOM FLANGE: 21.0" x 0.375"

3/8" PLATE INFORMATION

PLATE WIDTH ALONG ℄ PLATE: 109.70 in
AREA: 41.14 in^2
WEIGHT: 139.99 plf

NON-COMPOSITE SECTION PROPERTIES			
I_{xx}	S_x TOP	S_x BOT.	r_x
8198 in^4	516.1 in^3	493.3 in^3	12.32 in

N=8 COMPOSITE SECTION PROPERTIES	EFFECTIVE SLAB WIDTH				
	6'-0"	7'-0"	8'-0"	9'-0"	10'-0"
I_{xx}	20042 in^4	20879 in^4	21594 in^4	22213 in^4	22756 in^4
S_x TOP SLAB	1602.0 in^3	1773.9 in^3	1937.5 in^3	2093.5 in^3	2242.4 in^3
S_x TOP STEEL	4000.0 in^3	4889.5 in^3	5923.8 in^3	7140.8 in^3	8592.8 in^3
S_x BOT. STEEL	729.1 in^3	739.6 in^3	748.4 in^3	755.8 in^3	762.3 in^3

3N=24 COMPOSITE SECTION PROPERTIES	EFFECTIVE SLAB WIDTH				
	6'-0"	7'-0"	8'-0"	9'-0"	10'-0"
I_{xx}	14395 in^4	15097 in^4	15739 in^4	16327 in^4	16869 in^4
S_x TOP SLAB	816.2 in^3	888.5 in^3	959.5 in^3	1029.1 in^3	1097.5 in^3
S_x TOP STEEL	1420.0 in^3	1590.6 in^3	1767.7 in^3	1951.8 in^3	2143.3 in^3
S_x BOT. STEEL	643.7 in^3	656.2 in^3	667.0 in^3	676.5 in^3	684.9 in^3

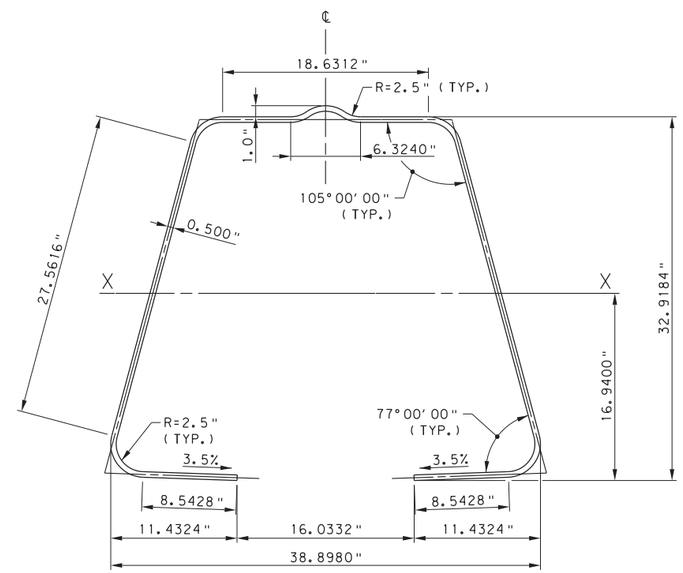

MOMENT CAPACITY	EFFECTIVE SLAB WIDTH				
	6'-0"	7'-0	8'-0"	9'-0"	10'-0"
PLASTIC, M_p	4140 KIP-FT	4249 KIP-FT	4349 KIP-FT	4441 KIP-FT	4524 KIP-FT
NOMINAL, M_n	3853 KIP-FT	3967 KIP-FT	4072 KIP-FT	4183 KIP-FT	4318 KIP-FT

EQUIVALENT PLATE GIRDER FOR STLRFD

TOP FLANGE: 22.75" x 0.5"
WEB: 31.5" x 1.035"
BOTTOM FLANGE: 20.0" x 0.5"

1/2" PLATE INFORMATION

PLATE WIDTH ALONG ℄ PLATE: 108.34 in
AREA: 54.17 in^2
WEIGHT: 184.34 plf

PENNDOT DRAWING #14-604-BDTD (REV.1) 9/2/2014

NOTES:

1. FOR INDEX OF DRAWINGS AND SPECIFICATIONS, SEE SHEET NOS. 1 & 2.
2. PLASTIC MOMENT CALCULATED BASED AASHTO 6.10.7.1.2 (COMPOSITE COMPACT SECTION IN POSITIVE FLEXURE).
3. SECTION PROPERTIES BASED ON A CONCRETE STRENGTH OF 4 KSI AND ASTM A709, GRADE 50 STEEL.
4. SECTION PROPERTIES CONSIDER 8" THICK CONCRETE DECK WITH 1/2" INTEGRAL WEARING SURFACE & 0" HAUNCH.
5. SECTION PROPERTIES ASSUME BOTTOM FLANGES ARE LEVEL.
6. COMPOSITE SECTION PROPERTIES ARE BASED ON EFFECTIVE SLAB WIDTH EXCLUDING THE CLOSURE POUR.

9/19/2019

DESIGNER
CDR BRIDGE SYSTEMS
D.L. CLARK BUILDING, SUITE 610
503 MARTINDALE STREET
PITTSBURGH, PA 15212-5746
P: 412-322-0313
F: 412-322-2138
WEB: www.cdrbridges.com

DATE:	04/08/19
SCALE:	NOT TO SCALE
DESIGNED:	RTE
DRAWN:	RTE
CHECKED:	WES
CDR JOB #:	

COMMONWEALTH OF PENNSYLVANIA
DEPARTMENT OF TRANSPORTATION
BUREAU OF PROJECT DELIVERY

CDR BRIDGE SYSTEMS, LLC
FOLDED STEEL PLATE GIRDER SYSTEM

GIRDER TABLES - 7

PLOTTED: 4/8/2019 8:09:47 AM
OPERATOR: Robert.Elliott
FILE PATH: P:\CDR BRIDGE\PROPOSALS\P3672.00-Folded_Steel_Plate_Girder\Design\USTN\PennDOT\11-21 Beam Tables.dgn

FSPG DESIGNATION: W40 H34 016 A77

NON-COMPOSITE SECTION PROPERTIES			
I_{xx}	S_x TOP	S_x BOT.	r_x
7137 in^4	417.8 in^3	412.8 in^3	13.00 in

N=8 COMPOSITE SECTION PROPERTIES	EFFECTIVE SLAB WIDTH				
	6'-0"	7'-0"	8'-0"	9'-0"	10'-0"
I_{xx}	18692 in^4	19401 in^4	19998 in^4	20510 in^4	20956 in^4
S_x TOP SLAB	1584.2 in^3	1755.4 in^3	1917.0 in^3	2069.9 in^3	2214.8 in^3
S_x TOP STEEL	4348.3 in^3	5462.2 in^3	6821.1 in^3	8514.5 in^3	10681.7 in^3
S_x BOT. STEEL	621.5 in^3	629.4 in^3	636.0 in^3	641.6 in^3	646.5 in^3

3N=24 COMPOSITE SECTION PROPERTIES	EFFECTIVE SLAB WIDTH				
	6'-0"	7'-0"	8'-0"	9'-0"	10'-0"
I_{xx}	13583 in^4	14254 in^4	14857 in^4	15402 in^4	15898 in^4
S_x TOP SLAB	781.9 in^3	857.2 in^3	930.8 in^3	1002.7 in^3	1073.0 in^3
S_x TOP STEEL	1376.0 in^3	1561.5 in^3	1755.7 in^3	1959.2 in^3	2172.8 in^3
S_x BOT. STEEL	554.3 in^3	564.6 in^3	573.3 in^3	580.9 in^3	587.6 in^3

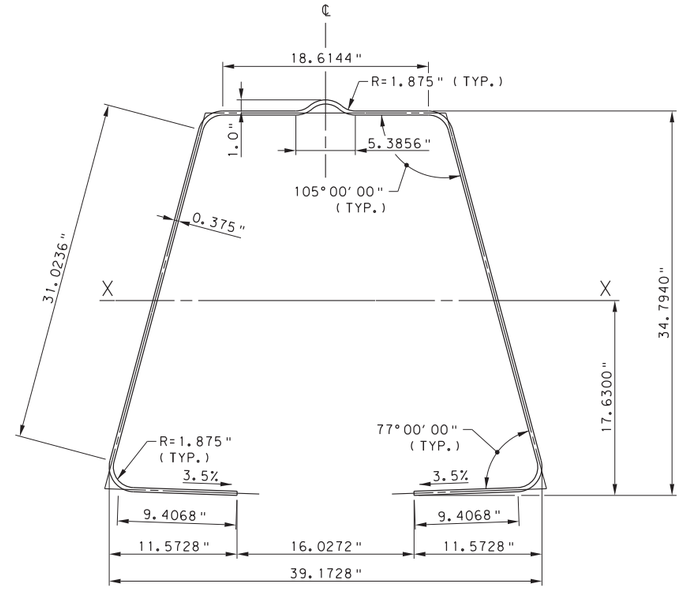

MOMENT CAPACITY	EFFECTIVE SLAB WIDTH				
	6'-0"	7'-0	8'-0"	9'-0"	10'-0"
PLASTIC, M_p	3583 KIP-FT	3677 KIP-FT	3758 KIP-FT	3821 KIP-FT	3871 KIP-FT
NOMINAL, M_n	3376 KIP-FT	3483 KIP-FT	3617 KIP-FT	3723 KIP-FT	3808 KIP-FT

EQUIVALENT PLATE GIRDER FOR STLRFD

TOP FLANGE: 21.75" x 0.375"
WEB: 33.625" x 0.776"
BOTTOM FLANGE: 21.0" x 0.375"

3/8" PLATE INFORMATION

PLATE WIDTH ALONG ℄ PLATE: 112.77 in
AREA: 42.29 in^2
WEIGHT: 143.91 plf

NON-COMPOSITE SECTION PROPERTIES			
I_{xx}	S_x TOP	S_x BOT.	r_x
9303 in^4	546.0 in^3	532.7 in^3	12.94 in

N=8 COMPOSITE SECTION PROPERTIES	EFFECTIVE SLAB WIDTH				
	6'-0"	7'-0"	8'-0"	9'-0"	10'-0"
I_{xx}	22742 in^4	23703 in^4	24523 in^4	25234 in^4	25857 in^4
S_x TOP SLAB	1726.9 in^3	1914.2 in^3	2093.0 in^3	2263.8 in^3	2427.3 in^3
S_x TOP STEEL	4011.4 in^3	4854.6 in^3	5815.3 in^3	6919.5 in^3	8201.4 in^3
S_x BOT. STEEL	788.8 in^3	800.3 in^3	809.8 in^3	817.9 in^3	824.9 in^3

3N=24 COMPOSITE SECTION PROPERTIES	EFFECTIVE SLAB WIDTH				
	6'-0"	7'-0"	8'-0"	9'-0"	10'-0"
I_{xx}	16292 in^4	17091 in^4	17821 in^4	18492 in^4	19110 in^4
S_x TOP SLAB	877.2 in^3	955.0 in^3	1031.3 in^3	1106.4 in^3	1180.1 in^3
S_x TOP STEEL	1471.3 in^3	1643.8 in^3	1822.3 in^3	2006.9 in^3	2198.2 in^3
S_x BOT. STEEL	695.5 in^3	709.1 in^3	720.9 in^3	731.3 in^3	740.5 in^3

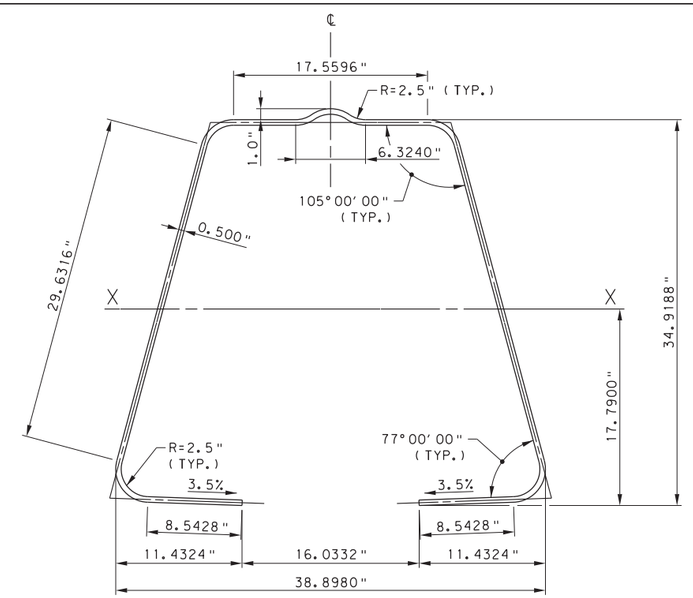

MOMENT CAPACITY	EFFECTIVE SLAB WIDTH				
	6'-0"	7'-0	8'-0"	9'-0"	10'-0"
PLASTIC, M_p	4497 KIP-FT	4614 KIP-FT	4717 KIP-FT	4811 KIP-FT	4897 KIP-FT
NOMINAL, M_n	4300 KIP-FT	4333 KIP-FT	4443 KIP-FT	4546 KIP-FT	4687 KIP-FT

EQUIVALENT PLATE GIRDER FOR STLRFD

TOP FLANGE: 21.75" x 0.5"
WEB: 33.5" x 1.035"
BOTTOM FLANGE: 20.0" x 0.5"

1/2" PLATE INFORMATION

PLATE WIDTH ALONG ℄ PLATE: 111.41 in
AREA: 55.70 in^2
WEIGHT: 189.53 plf

PENNDOT DRAWING #14-604-BDTD (REV. 9/2/2014)

NOTES:

1. FOR INDEX OF DRAWINGS AND SPECIFICATIONS, SEE SHEET NOS. 1 & 2.
2. PLASTIC MOMENT CALCULATED BASED AASHTO 6.10.7.1.2 (COMPOSITE COMPACT SECTION IN POSITIVE FLEXURE).
3. SECTION PROPERTIES BASED ON A CONCRETE STRENGTH OF 4 KSI AND ASTM A709, GRADE 50 STEEL.
4. SECTION PROPERTIES CONSIDER 8" THICK CONCRETE DECK WITH 1/2" INTEGRAL WEARING SURFACE & 0" HAUNCH.
5. SECTION PROPERTIES ASSUME BOTTOM FLANGES ARE LEVEL.
6. COMPOSITE SECTION PROPERTIES ARE BASED ON EFFECTIVE SLAB WIDTH EXCLUDING THE CLOSURE POUR.

9/19/2019

DESIGNER
CDR BRIDGE SYSTEMS
D.L. CLARK BUILDING, SUITE 610
503 MARTINDALE STREET
PITTSBURGH, PA 15212-5746
P: 412-322-0313
F: 412-322-2138
WEB: www.cdrbridges.com

DATE:	04/08/19
SCALE:	NOT TO SCALE
DESIGNED:	RTE
DRAWN:	RTE
CHECKED:	WES
CDR JOB #:	

COMMONWEALTH OF PENNSYLVANIA
DEPARTMENT OF TRANSPORTATION
BUREAU OF PROJECT DELIVERY

CDR BRIDGE SYSTEMS, LLC
FOLDED STEEL PLATE GIRDER SYSTEM

GIRDER TABLES - 8

PLOTTED: 4/8/2019 8:10:05 AM
OPERATOR: Robert.Elliott
FILE PATH: P:\CDR BRIDGE\PROPOSALS\P3672.00-Folded_Steel_Plate_Girder\Design\USTN\PennDOT\11-21 Beam Tables.dgn

FSPG DESIGNATION: W44 H24 016 A77

NON-COMPOSITE SECTION PROPERTIES			
I_{xx}	S_x TOP	S_x BOT.	r_x
3892 in^4	338.8 in^3	302.1 in^3	9.93 in

N=8 COMPOSITE SECTION PROPERTIES	EFFECTIVE SLAB WIDTH				
	6'-0"	7'-0"	8'-0"	9'-0"	10'-0"
I_{xx}	9974 in^4	10348 in^4	10667 in^4	10943 in^4	11187 in^4
S_x TOP SLAB	1061.5 in^3	1168.1 in^3	1267.4 in^3	1360.4 in^3	1447.8 in^3
S_x TOP STEEL	5261.5 in^3	7612.0 in^3	11640.6 in^3	20117.2 in^3	49360.1 in^3
S_x BOT. STEEL	443.7 in^3	449.6 in^3	454.7 in^3	459.2 in^3	463.2 in^3

3N=24 COMPOSITE SECTION PROPERTIES	EFFECTIVE SLAB WIDTH				
	6'-0"	7'-0"	8'-0"	9'-0"	10'-0"
I_{xx}	7310 in^4	7660 in^4	7974 in^4	8258 in^4	8516 in^4
S_x TOP SLAB	542.3 in^3	592.6 in^3	641.4 in^3	688.8 in^3	734.8 in^3
S_x TOP STEEL	1222.6 in^3	1411.7 in^3	1616.7 in^3	1839.5 in^3	2082.6 in^3
S_x BOT. STEEL	397.3 in^3	404.2 in^3	410.1 in^3	415.2 in^3	419.8 in^3

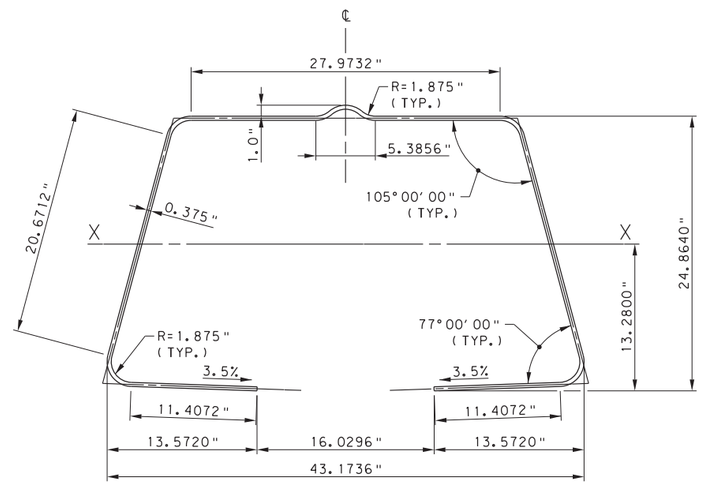

MOMENT CAPACITY	EFFECTIVE SLAB WIDTH				
	6'-0"	7'-0	8'-0"	9'-0"	10'-0"
PLASTIC, M_p	2468 KIP-FT	2558 KIP-FT	2628 KIP-FT	2683 KIP-FT	2726 KIP-FT
NOMINAL, M_n	2232 KIP-FT	2351 KIP-FT	2465 KIP-FT	2555 KIP-FT	2629 KIP-FT

EQUIVALENT PLATE GIRDER FOR STLRFD

TOP FLANGE: 31.25" x 0.375"
WEB: 23.625" x 0.776"
BOTTOM FLANGE: 25.0" x 0.375"

3/8" PLATE INFORMATION

PLATE WIDTH ALONG ℄ PLATE: 105.43 in
AREA: 39.53 in^2
WEIGHT: 134.51 plf

NON-COMPOSITE SECTION PROPERTIES			
I_{xx}	S_x TOP	S_x BOT.	r_x
5077 in^4	443.0 in^3	389.3 in^3	9.89 in

N=8 COMPOSITE SECTION PROPERTIES	EFFECTIVE SLAB WIDTH				
	6'-0"	7'-0"	8'-0"	9'-0"	10'-0"
I_{xx}	12156 in^4	12658 in^4	13089 in^4	13464 in^4	13796 in^4
S_x TOP SLAB	1170.5 in^3	1289.6 in^3	1402.1 in^3	1508.4 in^3	1609.3 in^3
S_x TOP STEEL	4213.2 in^3	5467.0 in^3	7130.6 in^3	9440.7 in^3	12860.5 in^3
S_x BOT. STEEL	562.4 in^3	570.6 in^3	577.5 in^3	583.5 in^3	588.9 in^3

3N=24 COMPOSITE SECTION PROPERTIES	EFFECTIVE SLAB WIDTH				
	6'-0"	7'-0"	8'-0"	9'-0"	10'-0"
I_{xx}	8794 in^4	9213 in^4	9594 in^4	9944 in^4	10266 in^4
S_x TOP SLAB	611.5 in^3	664.1 in^3	715.4 in^3	765.5 in^3	814.6 in^3
S_x TOP STEEL	1278.2 in^3	1445.7 in^3	1623.1 in^3	1811.4 in^3	2011.6 in^3
S_x BOT. STEEL	499.1 in^3	508.2 in^3	516.1 in^3	523.1 in^3	529.3 in^3

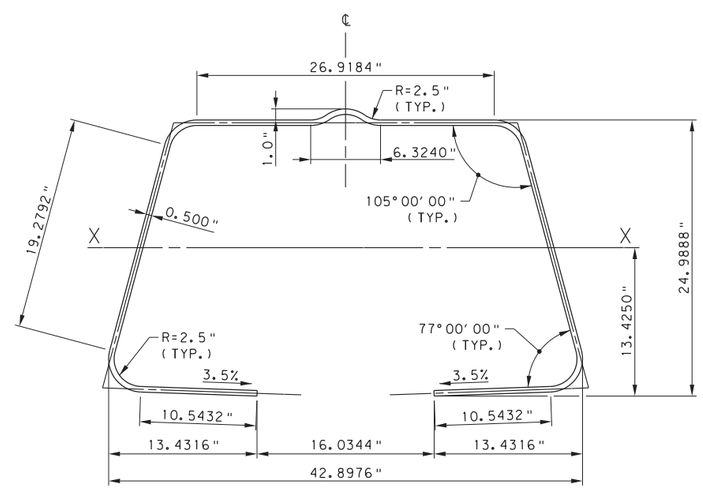

MOMENT CAPACITY	EFFECTIVE SLAB WIDTH				
	6'-0"	7'-0	8'-0"	9'-0"	10'-0"
PLASTIC, M_p	3056 KIP-FT	3156 KIP-FT	3251 KIP-FT	3341 KIP-FT	3417 KIP-FT
NOMINAL, M_n	2750 KIP-FT	2848 KIP-FT	2942 KIP-FT	3061 KIP-FT	3183 KIP-FT

EQUIVALENT PLATE GIRDER FOR STLRFD

TOP FLANGE: 31.25" x 0.5"
WEB: 23.5" x 1.035"
BOTTOM FLANGE: 24.0" x 0.5"

1/2" PLATE INFORMATION

PLATE WIDTH ALONG ℄ PLATE: 104.06 in
AREA: 52.03 in^2
WEIGHT: 177.04 plf

PENNDOT DRAWING #14-604-BDTD (REV. 9/2/2014

NOTES:

1. FOR INDEX OF DRAWINGS AND SPECIFICATIONS, SEE SHEET NOS. 1 & 2.
2. PLASTIC MOMENT CALCULATED BASED AASHTO 6.10.7.1.2 (COMPOSITE COMPACT SECTION IN POSITIVE FLEXURE).
3. SECTION PROPERTIES BASED ON A CONCRETE STRENGTH OF 4 KSI AND ASTM A709, GRADE 50 STEEL.
4. SECTION PROPERTIES CONSIDER 8" THICK CONCRETE DECK WITH 1/2" INTEGRAL WEARING SURFACE & 0" HAUNCH.
5. SECTION PROPERTIES ASSUME BOTTOM FLANGES ARE LEVEL.
6. COMPOSITE SECTION PROPERTIES ARE BASED ON EFFECTIVE SLAB WIDTH EXCLUDING THE CLOSURE POUR.

9/19/2019

DESIGNER
CDR BRIDGE SYSTEMS
D.L. CLARK BUILDING, SUITE 610
503 MARTINDALE STREET
PITTSBURGH, PA 15212-5746
P: 412-322-0313
F: 412-322-2138
WEB: www.cdrbridges.com

DATE:	04/08/19
SCALE:	NOT TO SCALE
DESIGNED:	RTE
DRAWN:	RTE
CHECKED:	WES
CDR JOB #:	

COMMONWEALTH OF PENNSYLVANIA
DEPARTMENT OF TRANSPORTATION
BUREAU OF PROJECT DELIVERY

CDR BRIDGE SYSTEMS, LLC
FOLDED STEEL PLATE GIRDER SYSTEM

GIRDER TABLES - 9

PLOTTED: 4/8/2019 8:10:27 AM
OPERATOR: Robert.Elliott
FILE PATH: P:\CDR BRIDGE\PROPOSALS\P3672.00-Folded_Steel_Plate_Girder\Design\USTN\PennDOT\11-21 Beam Tables.dgn

FSPG DESIGNATION: W44 H32 018 A77

NON-COMPOSITE SECTION PROPERTIES			
I_{xx}	S_x TOP	S_x BOT.	r_x
6859 in^4	437.8 in^3	410.5 in^3	12.59 in

N=8 COMPOSITE SECTION PROPERTIES	EFFECTIVE SLAB WIDTH				
	6'-0"	7'-0"	8'-0"	9'-0"	10'-0"
I_{xx}	17089 in^4	17731 in^4	18273 in^4	18739 in^4	19145 in^4
S_x TOP SLAB	1503.1 in^3	1661.9 in^3	1811.7 in^3	1953.2 in^3	2087.2 in^3
S_x TOP STEEL	4416.6 in^3	5595.5 in^3	7065.7 in^3	8948.7 in^3	11444.7 in^3
S_x BOT. STEEL	599.5 in^3	607.1 in^3	613.4 in^3	618.8 in^3	623.6 in^3

3N=24 COMPOSITE SECTION PROPERTIES	EFFECTIVE SLAB WIDTH				
	6'-0"	7'-0"	8'-0"	9'-0"	10'-0"
I_{xx}	12519 in^4	13115 in^4	13651 in^4	14137 in^4	14580 in^4
S_x TOP SLAB	756.2 in^3	826.4 in^3	895.1 in^3	962.1 in^3	1027.7 in^3
S_x TOP STEEL	1382.4 in^3	1567.1 in^3	1761.1 in^3	1965.2 in^3	2180.2 in^3
S_x BOT. STEEL	536.9 in^3	546.3 in^3	554.4 in^3	561.4 in^3	567.6 in^3

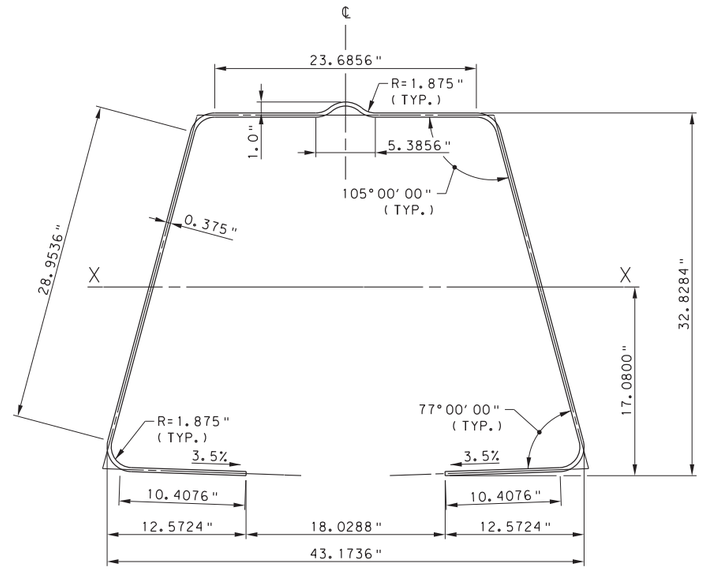

MOMENT CAPACITY	EFFECTIVE SLAB WIDTH				
	6'-0"	7'-0	8'-0"	9'-0"	10'-0"
PLASTIC, M_p	3406 KIP-FT	3500 KIP-FT	3585 KIP-FT	3651 KIP-FT	3703 KIP-FT
NOMINAL, M_n	3188 KIP-FT	3284 KIP-FT	3420 KIP-FT	3530 KIP-FT	3619 KIP-FT

EQUIVALENT PLATE GIRDER FOR STLRFD

TOP FLANGE: 26.75" x 0.375"
WEB: 31.625" x 0.776"
BOTTOM FLANGE: 23.0" x 0.375"

3/8" PLATE INFORMATION

PLATE WIDTH ALONG ℄ PLATE: 115.70 in
AREA: 43.39 in^2
WEIGHT: 147.64 plf

NON-COMPOSITE SECTION PROPERTIES			
I_{xx}	S_x TOP	S_x BOT.	r_x
8951 in^4	573.0 in^3	530.3 in^3	12.53 in

N=8 COMPOSITE SECTION PROPERTIES	EFFECTIVE SLAB WIDTH				
	6'-0"	7'-0"	8'-0"	9'-0"	10'-0"
I_{xx}	20826 in^4	21691 in^4	22432 in^4	23075 in^4	23640 in^4
S_x TOP SLAB	1645.9 in^3	1820.1 in^3	1986.1 in^3	2144.7 in^3	2296.2 in^3
S_x TOP STEEL	4041.4 in^3	4910.1 in^3	5912.1 in^3	7079.7 in^3	8457.3 in^3
S_x BOT. STEEL	761.6 in^3	772.4 in^3	781.4 in^3	789.1 in^3	795.8 in^3

3N=24 COMPOSITE SECTION PROPERTIES	EFFECTIVE SLAB WIDTH				
	6'-0"	7'-0"	8'-0"	9'-0"	10'-0"
I_{xx}	15079 in^4	15786 in^4	16433 in^4	17029 in^4	17579 in^4
S_x TOP SLAB	853.5 in^3	926.2 in^3	997.6 in^3	1067.7 in^3	1136.5 in^3
S_x TOP STEEL	1483.2 in^3	1654.2 in^3	1831.4 in^3	2015.3 in^3	2206.3 in^3
S_x BOT. STEEL	675.2 in^3	687.6 in^3	698.5 in^3	708.0 in^3	716.5 in^3

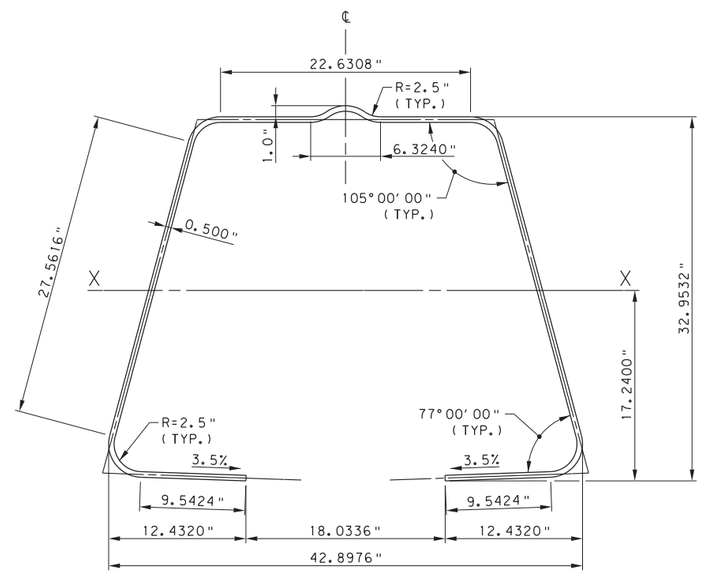

MOMENT CAPACITY	EFFECTIVE SLAB WIDTH				
	6'-0"	7'-0	8'-0"	9'-0"	10'-0"
PLASTIC, M_p	4275 KIP-FT	4384 KIP-FT	4485 KIP-FT	4580 KIP-FT	4669 KIP-FT
NOMINAL, M_n	3980 KIP-FT	4092 KIP-FT	4197 KIP-FT	4296 KIP-FT	4427 KIP-FT

EQUIVALENT PLATE GIRDER FOR STLRFD

TOP FLANGE: 26.75" x 0.5"
WEB: 31.5" x 1.035"
BOTTOM FLANGE: 22.0" x 0.5"

1/2" PLATE INFORMATION

PLATE WIDTH ALONG ℄ PLATE: 114.34 in
AREA: 57.17 in^2
WEIGHT: 194.53 plf

PENNDOT DRAWING #14-604-BDTD (REV.1) 9/2/2014

NOTES:

1. FOR INDEX OF DRAWINGS AND SPECIFICATIONS, SEE SHEET NOS. 1 & 2.
2. PLASTIC MOMENT CALCULATED BASED AASHTO 6.10.7.1.2 (COMPOSITE COMPACT SECTION IN POSITIVE FLEXURE).
3. SECTION PROPERTIES BASED ON A CONCRETE STRENGTH OF 4 KSI AND ASTM A709, GRADE 50 STEEL.
4. SECTION PROPERTIES CONSIDER 8" THICK CONCRETE DECK WITH 1/2" INTEGRAL WEARING SURFACE & 0" HAUNCH.
5. SECTION PROPERTIES ASSUME BOTTOM FLANGES ARE LEVEL.
6. COMPOSITE SECTION PROPERTIES ARE BASED ON EFFECTIVE SLAB WIDTH EXCLUDING THE CLOSURE POUR.

9/19/2019

DESIGNER
CDR BRIDGE SYSTEMS
D.L. CLARK BUILDING, SUITE 610
503 MARTINDALE STREET
PITTSBURGH, PA 15212-5746
P: 412-322-0313
F: 412-322-2138
WEB: www.cdrbridges.com

DATE:	04/08/19
SCALE:	NOT TO SCALE
DESIGNED:	RTE
DRAWN:	RTE
CHECKED:	WES
CDR JOB #:	

COMMONWEALTH OF PENNSYLVANIA
DEPARTMENT OF TRANSPORTATION
BUREAU OF PROJECT DELIVERY

CDR BRIDGE SYSTEMS, LLC
FOLDED STEEL PLATE GIRDER SYSTEM

GIRDER TABLES - 10

PLOTTED: 4/8/2019 8:10:52 AM
OPERATOR: Robert.Elliott
FILE PATH: P:\CDR BRIDGE\PROPOSALS\P3672.00-Folded_Steel_Plate_Girder\Design\USTN\PennDOT\11-21 Beam Tables.dgn

FSPG DESIGNATION: W44 H34 020 A77

NON-COMPOSITE SECTION PROPERTIES			
I_{xx}	S_x TOP	S_x BOT.	r_x
7551 in^4	457.5 in^3	422.5 in^3	13.14 in

N=8 COMPOSITE SECTION PROPERTIES	EFFECTIVE SLAB WIDTH				
	6'-0"	7'-0"	8'-0"	9'-0"	10'-0"
I_{xx}	18717 in^4	19418 in^4	20009 in^4	20518 in^4	20960 in^4
S_x TOP SLAB	1593.9 in^3	1763.6 in^3	1923.8 in^3	2075.5 in^3	2219.3 in^3
S_x TOP STEEL	4411.3 in^3	5531.4 in^3	6897.7 in^3	8600.0 in^3	10778.1 in^3
S_x BOT. STEEL	621.2 in^3	629.1 in^3	635.7 in^3	641.4 in^3	646.3 in^3

3N=24 COMPOSITE SECTION PROPERTIES	EFFECTIVE SLAB WIDTH				
	6'-0"	7'-0"	8'-0"	9'-0"	10'-0"
I_{xx}	13720 in^4	14371 in^4	14957 in^4	15489 in^4	15973 in^4
S_x TOP SLAB	800.0 in^3	874.4 in^3	947.1 in^3	1018.2 in^3	1087.7 in^3
S_x TOP STEEL	1421.6 in^3	1608.2 in^3	1803.6 in^3	2008.3 in^3	2223.1 in^3
S_x BOT. STEEL	554.9 in^3	564.9 in^3	573.5 in^3	580.9 in^3	587.5 in^3

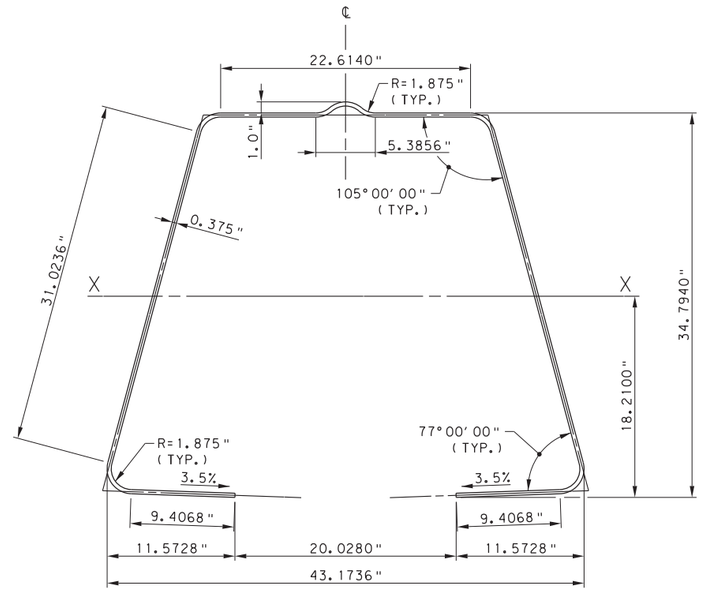

MOMENT CAPACITY	EFFECTIVE SLAB WIDTH				
	6'-0"	7'-0	8'-0"	9'-0"	10'-0"
PLASTIC, M_p	3584 KIP-FT	3679 KIP-FT	3765 KIP-FT	3832 KIP-FT	3886 KIP-FT
NOMINAL, M_n	3377 KIP-FT	3475 KIP-FT	3609 KIP-FT	3721 KIP-FT	3812 KIP-FT

EQUIVALENT PLATE GIRDER FOR STLRFD

TOP FLANGE: 25.75" x 0.375"
WEB: 33.625" x 0.776"
BOTTOM FLANGE: 21.0" x 0.375"

3/8" PLATE INFORMATION

PLATE WIDTH ALONG ℄ PLATE: 116.77 in
AREA: 43.79 in^2
WEIGHT: 149.01 plf

NON-COMPOSITE SECTION PROPERTIES			
I_{xx}	S_x TOP	S_x BOT.	r_x
9847 in^4	598.5 in^3	545.6 in^3	13.08 in

N=8 COMPOSITE SECTION PROPERTIES	EFFECTIVE SLAB WIDTH				
	6'-0"	7'-0"	8'-0"	9'-0"	10'-0"
I_{xx}	22800 in^4	23745 in^4	24554 in^4	25257 in^4	25874 in^4
S_x TOP SLAB	1742.8 in^3	1928.3 in^3	2105.3 in^3	2274.6 in^3	2436.7 in^3
S_x TOP STEEL	4084.3 in^3	4932.2 in^3	5898.2 in^3	7008.4 in^3	8297.0 in^3
S_x BOT. STEEL	788.4 in^3	799.9 in^3	809.4 in^3	817.5 in^3	824.5 in^3

3N=24 COMPOSITE SECTION PROPERTIES	EFFECTIVE SLAB WIDTH				
	6'-0"	7'-0"	8'-0"	9'-0"	10'-0"
I_{xx}	16521 in^4	17292 in^4	17999 in^4	18649 in^4	19250 in^4
S_x TOP SLAB	902.7 in^3	979.5 in^3	1054.9 in^3	1129.1 in^3	1201.9 in^3
S_x TOP STEEL	1529.4 in^3	1702.9 in^3	1882.4 in^3	2068.2 in^3	2260.5 in^3
S_x BOT. STEEL	697.2 in^3	710.3 in^3	721.7 in^3	731.8 in^3	740.8 in^3

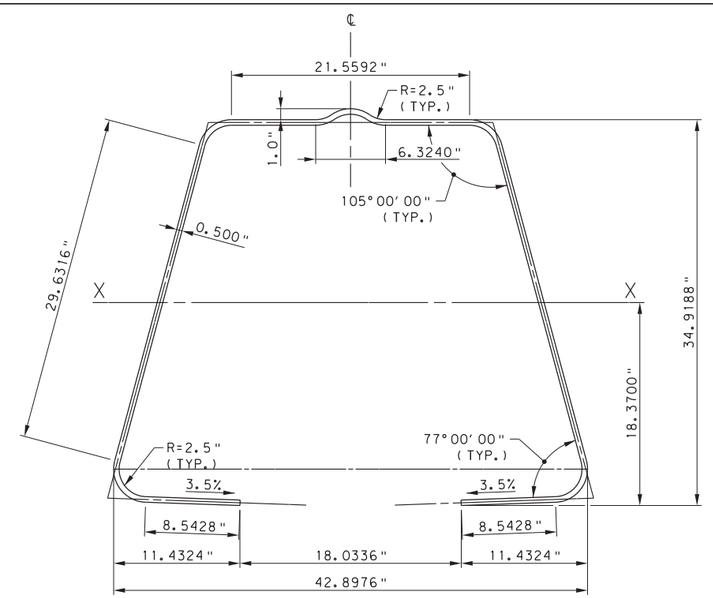

MOMENT CAPACITY	EFFECTIVE SLAB WIDTH				
	6'-0"	7'-0	8'-0"	9'-0"	10'-0"
PLASTIC, M_p	4506 KIP-FT	4616 KIP-FT	4719 KIP-FT	4814 KIP-FT	4904 KIP-FT
NOMINAL, M_n	4222 KIP-FT	4336 KIP-FT	4444 KIP-FT	4545 KIP-FT	4673 KIP-FT

EQUIVALENT PLATE GIRDER FOR STLRFD

TOP FLANGE: 25.75" x 0.5"
WEB: 33.5" x 1.035"
BOTTOM FLANGE: 20.0" x 0.5"

1/2" PLATE INFORMATION

PLATE WIDTH ALONG ℄ PLATE: 115.41 in
AREA: 57.70 in^2
WEIGHT: 196.34 plf

PENNDOT DRAWING #14-604-BDTD (REV.1)

NOTES:

1. FOR INDEX OF DRAWINGS AND SPECIFICATIONS, SEE SHEET NOS. 1 & 2.
2. PLASTIC MOMENT CALCULATED BASED AASHTO 6.10.7.1.2 (COMPOSITE COMPACT SECTION IN POSITIVE FLEXURE).
3. SECTION PROPERTIES BASED ON A CONCRETE STRENGTH OF 4 KSI AND ASTM A709, GRADE 50 STEEL.
4. SECTION PROPERTIES CONSIDER 8" THICK CONCRETE DECK WITH 1/2" INTEGRAL WEARING SURFACE & 0" HAUNCH.
5. SECTION PROPERTIES ASSUME BOTTOM FLANGES ARE LEVEL.
6. COMPOSITE SECTION PROPERTIES ARE BASED ON EFFECTIVE SLAB WIDTH EXCLUDING THE CLOSURE POUR.

9/19/2019

DESIGNER
CDR BRIDGE SYSTEMS
D.L. CLARK BUILDING, SUITE 610
503 MARTINDALE STREET
PITTSBURGH, PA 15212-5746
P: 412-322-0313
F: 412-322-2138
WEB: www.cdrbridges.com

DATE:	04/08/19
SCALE:	NOT TO SCALE
DESIGNED:	RTE
DRAWN:	RTE
CHECKED:	WES
CDR JOB #:	

COMMONWEALTH OF PENNSYLVANIA
DEPARTMENT OF TRANSPORTATION
BUREAU OF PROJECT DELIVERY

CDR BRIDGE SYSTEMS, LLC
FOLDED STEEL PLATE GIRDER SYSTEM

GIRDER TABLES - 11

PLOTTED: 4/8/2019 8:11:10 AM
OPERATOR: Robert.Elliott
FILE PATH: P:\CDR BRIDGE\PROPOSALS\P3672.00-Folded_Steel_Plate_Girder\Design\USTN\PennDOT\11-21 Beam Tables.dgn

Product:

Item 9000-7032 - Metal Foundations for DMS Center-Mount Sign Structures
Shaner Industries
PennDOT Drawing #14-603-BDTD

Approval Date:	**Initiated By SOL:**
April 28, 2015	483-15-02

Application/Use:

Metal Foundations for Dynamic Message Center-Mount Sign Structures manufactured by Shaner Industries of Ambridge, PA have been approved to be used as an "alternate" to drilled concrete caissons and/or spread footings as specified on the attached standard drawing. The use as an "Alternate" or drilled concrete caissons or spread footings is at the discretion of the District Executive.

The usage of Metal Foundations for Dynamic Message Center-Mount Sign Structures has the following restrictions:

- Maximum Sign Area: 300 square feet

This foundation meets both AASHTO and Design Manual, Part 4 design criteria.

Specifications:

Design/Material/Construction Specifications for this foundation are specified on PennDOT Drawing #14-603-BDTD dated April 28, 2015 of Dynamic Message Center-Mount Sign Structures for your use.

Comment:

On those projects permitting the use of this metal foundation as an alternate, a special provision should be included in the proposal to indicate that the "Dynamic Message Center-Mount Sign Structures" as an alternate is allowed.

The contractor will be required to revise the pertinent contract drawings as per DM-4M, PP 1.10 to show the usage of "Dynamic Message Center-Mount Sign Structures" and will also be required to reimburse the Department a fee of $1000 per design for the review and approval of the revision. This should be specified in the contract's Special Provision.

SHANER INDUSTRIES, LLC
METAL FOUNDATIONS
DESIGN SPECIFICATIONS.

1. General:

a. PENNDOT drawing 14-603-BDTD sheets 2 thru 6, provide the design, fabrication and installation criteria for use of standard-sized Metal Foundations (MF) as alternates to the standard-sized concrete foundations shown on PENNDOT Drawing BD-649M, Sheets 4 and 5, for support of center-mount DMS sign structures.

b. Shaner Industries, takes full responsibility for engineering theory and calculations correctness and ensuring documents either by needed details or construction specifications.

2. Design:

a. Drilled shafts (caissons).

Case 1 soil parameters (no site specific soil data)

Maximum design pressure	1.5 tons per square foot
Maximum design lateral displacement	0.5"
Modulus of subgrade reaction	K= 10.0 pounds per cubic inch
Cohesion	0 pounds per square foot
Unit weight of soil	100 pounds per cubic foot
Angle of internal friction	25 degrees

Case 2 soil parameters (site specific soil data)

Maximum design pressure	1.5 tons per square foot
Maximum design lateral displacement	0.5"
Modulus of subgrade reaction:	
above the water table	K= 80.0 pounds per cubic inch
below the water table	K= 60.0 pounds per cubic inch
Cohesion:	
above the water table	15 pounds per square foot
below the water table	0 pounds per square foot
water table	5 feet below grade
Unit weight of soil	120 pounds per cubic foot
Angle of internal friction	30 degrees

PENNSYLVANIA
DEPARTMENT OF TRANSPORTATION
RECOMMENDED
Thomas P Macioce
CHIEF BRIDGE ENGINEER

b. The calculations demonstrate that the Metal Foundations have the same design capacities to resist loads imposed by signs as the concrete foundations they replace.

c. Changes to the design cannot be made unless Shaner Industries designs the changes and the Chief Bridge Engineer approves the changes.

d. If site specific soil information is not available, the metal foundations designed in accordance with case 1 soil design criteria on PennDOT drawing 14-603-BDTD sheet 3 & 4 of 6 must be used. If site specific soil information is available and is equal to or better than the case 2 soil design values in Section 2A, the metal foundations on sheet 5 & 6 of 6 may be used. Evaluation of the specific soil information to determine if material's properties are equal to or better than Case 2 should be performed by a qualified geotechnical engineer, registered in the Commonwealth of Pennsylvania. A copy of the soil evaluation should be submitted with the Metal Foundations design.

3. Use Guidelines:

a. The use of Metal Foundations should consider any site conditions that could effect these foundations including but not limited to site specific soil data, obstructions, voids, rock interference, and buried conduits or pipelines having cathodic protections.

b. Obtain the approval of the Distric Bridge and Geotechnical Engineers before incorporating the Shaner Foundations into a project.

SHANER INDUSTRIES, LLC.
METAL FOUNDATIONS
CONSTRUCTION SPECIFICATIONS.

1. Description:

This work includes the furnishing, constructing and installing of galvanized metal foundations.

2. Materials:

a. General- Provide materials and workmanship in accordance with the effective Pennsylvania Department of Transportation Specifications, Publication 408 Section (948, 1105 and special conditions) as specified in the contract documents and on the construction drawings.

Pipe - Section 1105.02 (a) 2.a, A500 (Grade C) or A53 (Grade B).
Plate - Section 1105.02(a) 2 & (a) 3.c, ASTM A709 or ASTM A572 (Grade 50).
Bolts, Nuts and Washers - Section 1105.02(d) or ASTM A193 (Gr. B7),
ASTM A194 (Gr. 2H), ASTM F436. Galvanized and as required by pole manufacturer.
Galvanizing - Section 1105.02(s), ASTM A123 and ASTM A153.
Welding Materials - Section 1105.03(m), except use effective ANSI/AWS D1.1 for tubular sections.

b. Certifications - Section 106.03(b)3.

3. Fabrication:

Section 1105.03, ASTM and effective ANSI/AWS D1.1 as applicable. Fabricate the foundations to the minimum material thicknesses and dimensions shown on the drawings. Angles of welded structural connections shall be correct to within plus or minus 1 degree. Fabrication, finishing and bolt holes in accordance with Sections 1101 and 1105. Bolt holes shall be factory installed unless otherwise permitted by the Engineer.

4. Construction:

As shown on the standard drawings, approved by the Department and as follows:

a. General - Install the foundation in conformity with the lines, grades, fin orientations, dimensions and locations as shown on the approved drawings according to the contract documents.

Unless otherwise indicated, install the foundations in accordance with Section 1006.3(a) to within a plumbness tolerance equal to 2 percent of the foundation length and within 1 inch of the planned locations. Orient the foundations so that the anchor bolts and fins are within 2 degrees of their planned orientation, unless otherwise permitted by the Engineer. Install anchor bolts using a template equivalent to the base plate of the planned structure so that the center of the completed anchor bolt pattern is within 0.25 inches of the center of the top plate of the foundation. Install anchor bolt pattern to within 2 degrees of planned orientation, unless otherwise permitted by the Engineer.

Any damage to the galvanizing during handling or delivery or bolt hole drilling should be repaired in accordance with Section 1105.02(e).

b. Installation.

Anchor Method (B.1):

Drill a vertical hole, plumb and in the location of the required installed foundation as shown on the construction drawings. The diameter of the completed auger hole shall be no greater than the outside diameter of the required foundation pipe column. Field verify that the completed hole diameter is not larger than the outside diameter of the pipe column. Auger the hole a minimum of two feet deeper than the depth of the bottom of the installed foundation. Record the soil type and classification on the installation report. Install foundation immediately after auger hole is completed.
If rock or obstructions are encountered above the design tip elevation of the foundation, contact the Engineer. If necessary, install the foundation at an alternative location acceptable to the Engineer or replace it with a conventional concrete foundation at the original location, as directed by the Engineer at no additional cost to the Department. Modification of the foundation to accommodate obstructions will not be permitted.
Contact the Engineer if soil conditions are different from those used for the foundation design or if the preaugered hole collapses. If the preaugered hole collapses, that location is rejected.
Lower the installing anchor into the hole and place a centering collar in the hole, around the anchor. Place hydraulic cylinders over the anchor rod, on top of the anchor housing and lock into place with the high strength nut. Expand the hydraulic cylinders to the maximum required rod extension or hydraulic pressure for the installation anchor in use. Secure the anchor lock nut against the anchor housing. Remove the hydraulic cylinders and the centering collar. Record the anchor length, installation pressure and rod extension on the installation log.
Extend the high strength anchor rod to accommodate the total length of the foundation and the hydraulic cylinders. Lift the foundation into position over the installation anchor. Foundation fin orientation must conform to the construction drawings. Position hydraulics on top of the foundation, attach to the anchor rod and lock into position with the high strength nut. Check and adjust orientation, alignment, plumbness and level of the foundation before the first stroke of the cylinders.
Expand the hydraulic cylinders in order to push the foundation into the earth. This may require several strokes of the cylinders to reach the proper elevation. Record the foundation installing forces on the installation report for each one foot of depth below the ground surface.
Release the anchor lock nut, remove the hydraulics and drop the anchor expanding cone below the anchor plates. Withdraw the installing anchor through the foundation column. The soils removed during the auger/drilling operations are then backfilled into the core of the metal foundation to a compacted condition acceptable to the representative. Incorporate installation of conduit and grounding connections, as appropriate.
The structure may be bolted to the foundation immediately after the foundation is installed, back-filled and approved by the inspector. Use the bolts or studs, washers, lock washers and nuts as specified and/or shown on the approved contract drawings.
When additional anchors are required to install the foundation, install the satellite anchors no closer than eight satellite hole diameters from the center of the foundation in the manner as the main anchor. Attach the anchors to spreader beams positioned above the hydraulic cylinders. Expand the cylinders against the beam that employ the resistance of the multiple anchors to install the foundation.
Remove the satellite anchors. Backfill and compact the satellite anchors holes using the material that was removed during the drilling operations. Tamp the back-fill in 4-inch lift to a stable condition equal to or greater than the density of the soil before the excavation.
Observe the installation of the foundation during the entire installation process. If obstructions are encountered that displace the foundation laterally or alter its vertical alignment from that of the predrilled hole, remove and inspect the foundation for damage. If the foundation is not damaged, either reinstall at an alternative location acceptable to the Engineer or replace it with a conventional concrete foundation at the original location, if directed by the Engineer. Field modifications of foundations are not permitted.

Vibratory Method (B.2):

a) Equipment:

The size of the hydraulic vibratory hammer to be used for the installation of the metal foundation system is dependent on the design parameters of the metal foundation as well as the geotechnical soils condition of the intended project site. Normally the driving force of the hydraulic vibratory hammer during installation of the metal foundations is between 45 tons to 65 tons; occasionally hydraulic vibratory hammers with a driving force up to 100 tons are utilized.
The type of hydraulic vibratory hammer used for the installation of the metal foundation system will depend on the type of equipment that the hydraulic vibratory hammer will be attached to during installation such as ABI Mobilram MultiPurpose Machines, Excavators with built-in hydraulic capacity as well as self propelled hydraulic cranes in the 40 ton to 70 ton range. The Metal Foundation Adapter (MFA) is utilized to attach the metal foundation to the hydraulic vibratory hammer for proper installation. The MFA is engineered and designed for the specific project metal foundation(s) to be installed and is furnished with the metal foundation(s).

b) Predrilling of Soils:

Predrilling of the soils may be required depending on site specific data from the geotechnical report or if load testing of the metal foundation is specified. Predrilling may also be utilized to reduce the tonnage size of the hydraulic vibratory hammer to accommodate certain types of equipment based on jobsite conditions. Any soil spoils produced from the drilling operations will be placed back into the core of the metal foundation and will not require the soils to be hauled away.

c) Installation:

The MFA described above is bolted to the metal foundation which then enables the hydraulic vibratory hammer to be connected to the MFA to lift the metal foundation into position for the installation. This method of connection enables the metal foundation to be oriented, aligned and plumbed before activating the hydraulic vibratory hammer to begin the installation of the metal foundation. During the installation process the vibratory system is interrupted periodically to monitor vertical alignment and orientation. The installation of the metal foundation is considered complete once the metal foundation has reached the design depth below grade; the MFA is then removed from the metal foundation and prepared to be mounted to another metal foundation for installation.

Testing procedures (B.3):
This testing procedure is to apply only and exclusively to the Metal Foundations vibratory method of installation described in paragraph (B.2). Upon installation of the new metal foundations, a compression load test will be performed to verify the design axial capacity of the Metal Foundation in accordance with PENNDOT Publication 408, Section 1005.3 (g) 1.
The foundation will be subject to a compression force up to its axial design load, held for thirty (30) minutes and verified that no settlement is recorded, the compressive force will then be increased up to 125% of the design axial load, held for thirty (30) minutes and verified that no more than 0.25 inches of penetration is recorded. Any value exceeding the allowables will be considered test failure.
The equipment used to perform the test will conform to the description in paragraph (B.1).
For projects with multiple foundations at the same site, the first two (2) installed foundations need to be tested in accordance with the above procedures to verify the actual foundation capacity prior to installing the subsequent foundations. If either test is considered failure, use anchor method (B1) to install the remaining foundations. For single foundation project, the compression load test is always required to verify the actual foundation capacity. If the test is considered failure, Item 2) of Section B.4 shall apply.
<u>Single anchor system procedure:</u>
A hole of a depth minimum two feet deeper than the installed foundation will be drilled inside the foundation core pipe.
The anchor/rod/centering collar is lowered into the augered/drilled opening with a crane, the hydraulic cylinders are then placed over the foundation top plate and locked into place with the high strength nut. The hydraulic cylinders are then expanded to engage the anchor and apply the compressive force at the top of the foundation. Previously installed dial gauge system will monitor the compressive force applied to the foundation and the vertical movement recorded at the various stages of the test. All the equipment will be removed at test completion and any soil augered during the drilling operations will be placed inside the hole.
Depending on the soil type and axial design loads, a <u>double anchor satellite system</u> could be used to perform the required test; in this case two satellite holes will be auger/drilled at a safe distance (approximately 3 times the foundation diameter) from the installed foundation, the anchor/rod/centering collar is lowered into the augered/drilled opening with a crane, the hydraulic cylinders are then placed over the anchor rod and locked into place with the high strength nut. The hydraulic cylinders are then expanded to the maximum required rod extension or hydraulic pressure for the anchor being used for the testing.The hydraulic cylinders are then removed from the satellite anchors and placed over the foundation top plate. A cross beam will then be placed over them and secured to the anchor rods with high strength nuts. The hydraulic cylinders are then expanded to obtain the required test compressive force and settlements recorded at each stage.
General (B.4):
1) Immediately after the metal foundation is installed and approved by the project inspector, the structures to be supported may be attached to the metal foundation. Use the anchor stud assemblies as specified and/or shown on the approved metal foundation project drawings.
2) If rock is found to be present after the metal foundation is fabricated and delivered to the project site, it shall be determined from field verification the depth that the rock layer is encountered below finished grade and the depth at which the rock layer ends below finished grade. The metal foundation for those locations will be:
   a) The location of the metal foundation, with approval from the Engineer, will be relocated as directed by the Department to avoid the rock layer.
   b) Replace the proposed metal foundation with a conventional concrete foundation at the original location, as directed by the Engineer at no additional cost to the department.
   c) Modification of the metal foundation or supported structure to accommodate obstructions or mis-installation will not be permitted.

c. Reports - An installation report supplied by the manufacturer must be completed and submitted to the Department for each installation. The report must be completed and signed by the installer and signed by a Department Inspector and shall include the visual classifications of the soils encountered, identification number of the foundation, the installer's name and company, the location of the installation, the date of the installation, the foundation size, the calibration dates of the equipment, the installation forces required at measured depths, any problem encountered and their resolution.

d. Rejection of Units - Units that are damaged or do not conform to the above specifications may be rejected. Replace or repair rejected units at no additional costs in a manner acceptable to the Engineer. Attempting to pull up the over-pushed or over-vibrated metal foundation to match the proposed foundation elevation will not be permitted and the unit may be rejected.

e. Technical Assistance - In the event of unusual problems or special circumstances, provide a qualified designer/installer of metal foundations at the project site to assist the Contractor and Engineer.

COMMONWEALTH OF PENNSYLVANIA
REGISTERED PROFESSIONAL
JASON R. TRUCKENBROD
ENGINEER
No. 51728-E
3-24-15
4/28/2015

THIS DRAWING IS THE PROPERTY OF "SHANER INDUSTRIES", IT IS MADE FOR EXCLUSIVE USE OF "SHANER INDUSTRIES". NEITHER THE DRAWING OR REPRODUCTION OF IT NOR INFORMATION DERIVED FROM IT IS TO BE GIVEN TO OTHERS WITHOUT THE EXPRESSED CONSENT OF "SHANER INDUSTRIES". NO USE IS TO BE MADE OF IT WHICH IS OR MAY BE IN ANY WAY INJURIOUS TO AND/OR CONTRARY TO THE INTERESTS OF "SHANER INDUSTRIES". "SHANER INDUSTRIES" MAKES NO REPRESENTATIONS OR WARRANTIES AS TO ANY USE OF THIS DRAWING OTHER THAN THAT OF WHICH "SHANER INDUSTRIES" ORIGINALLY INTENDED. THIS FOUNDATION TYPE IS COVERED UNDER U.S. PATENT No 5,570,975.

REV. 0	03-12-2015	FINAL ISSUE	

STATE: PA
JOB NUMBER:
PROJECT: COMMONWEALTH OF PENNSYLVANIA, DEPARTMENT OF TRANSPORTATION, BUREAU OF PROJECT DELIVERY.
DESCRIPTION: METAL FOUNDATIONS FOR DYNAMIC MESSAGE SIGN STRUCTURES.

SHANER INDUSTRIES
930 GLENWOOD AVE.
AMBRIDGE, PA 15003
1-855-356-3825
T 724-266-1066
F 724-266-1006

CLIENT:	
DRAWN BY: DL	SCALE: N.T.S.
CHECKED BY: CH	
DATE: 10-18-2014	
DRAWING NUMBER: 14-603-BDTD	

REV. 1 CHANGED METAL FOUNDATIONS, LLC TO SHANER INDUSTRIES, LLC.

METAL FOUNDATIONS - ALL RIGHTS OF THIS TECHNOLOGY AND DESIGN ARE PROPERTY OF SHANER INDUSTRIES. UNAUTHORIZED USE OF THIS CONTENT WITHOUT EXPRESS WRITTEN PERMISSION IS SUBJECT TO LEGAL ACTION AND WILL BE PURSUED TO THE FULLEST EXTENT.

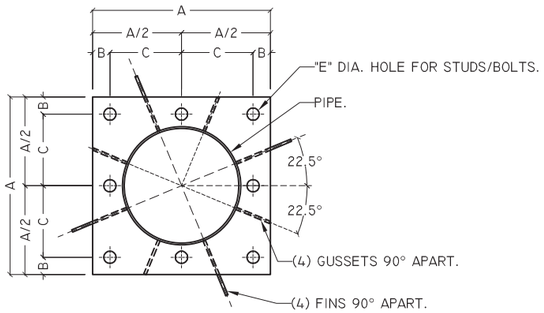

2 TOP PLATE TYPE 'Y'
(SEE BC-741M, SHEET 4 OF 6 FOR DIMENSIONS A,B,C & E BASED ON DMS COLUMN SIZE)

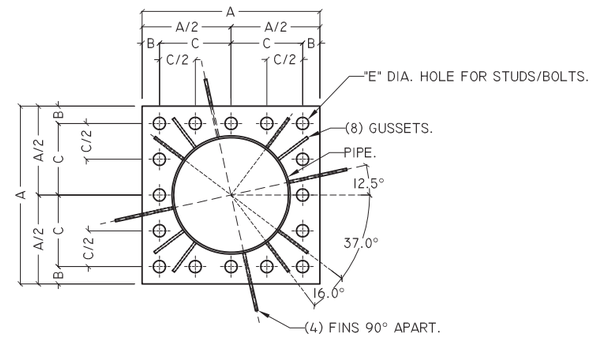

3 TOP PLATE TYPE 'X'
(SEE BC-741M, SHEET 4 OF 6 FOR DIMENSIONS A,B,C & E BASED ON DMS COLUMN SIZE)

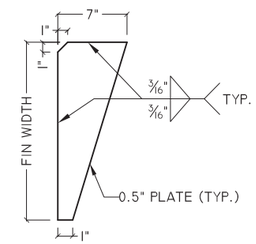

4 GUSSETS DETAIL

NOTES:

GENERAL:

1. THIS STANDARD IS APPLICABLE TO DMS STRUCTURES ONLY.

FABRICATION TOLERANCES:

1. UNLESS OTHERWISE SPECIFIED ALL FABRICATION TOLERANCES ARE:
   LINEAR TOLERANCES - 0"/±1/8"
   ANGULAR TOLERANCES - 0°/±1°.

INSTALLATION TOLERANCES & METHOD:

1. PLUMBNESS WITHIN 1.5" OVER FOUNDATION FULL LENGTH.
2. CENTER OF FOUNDATION WITHIN APPROXIMATELY 3" OF PLANNED LOCATION IN ALL DIRECTIONS.
3. FOUNDATION ORIENTATION WITHIN 7° OF DESIGN ORIENTATION UNLESS OTHERWISE PERMITTED BY ENGINEER.
4. FOUNDATION INSTALLED IN CONFORMITY WITH LINES, GRADES, ORIENTATIONS AND LOCATION SHOWN ON CONTRACT DRAWINGS.
5. PRE-DRILLING MAY BE REQUIRED. SHANER INDUSTRIES RESERVE THE RIGHT TO SELECT THE PREFERRED METHOD OF INSTALLATION FOR EACH SITE AND FOUNDATION TYPE.

MATERIAL NOTES: (PROVIDE MILL CERTS ON ALL MATERIALS)

1. PIPE — ASTM A53 - GR B, 35 KSI.
2. FINS — ASTM A36 - GR 36 & ASTM A572 - GR 50.
3. PLATE — ASTM A36 - GR 36 & ASTM A572 - GR 50.
4. FABRICATION — FABRICATE IN ACCORDANCE WITH AASHTO AWS D1.1M/D1.1-2008 AND PUBLICATION 408, SECTION 1105. FABRICATE IN A BULLETIN 15 APPROVED SHOP HAVING SBR CERTIFICATION.
5. FINISH — H.D. GALVANIZED TO ASTM A123.

FOUNDATION HARDWARE:

1. STUDS — 24" L., ASTM A193 GR. B7 - 105 KSI MIN..
2. NUTS — ASTM A194 GR. 2H.
3. WASHERS — ASTM F436.
4. FINISH — H.D. GALVANIZED TO ASTM A153.

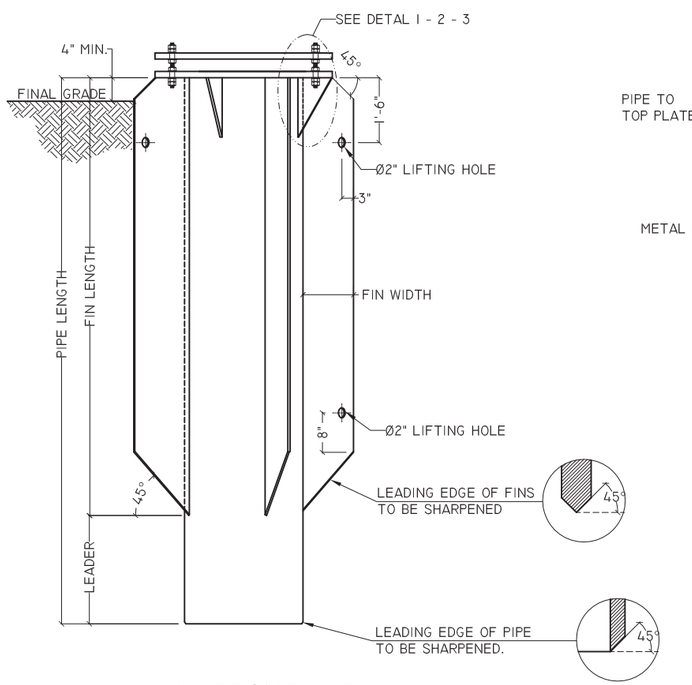

1 MF FRONT VIEW

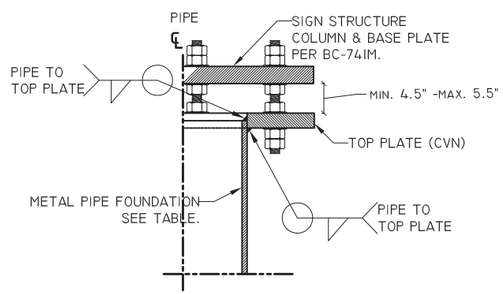

5 DETAIL 1
(TOP PLATE WELDS)

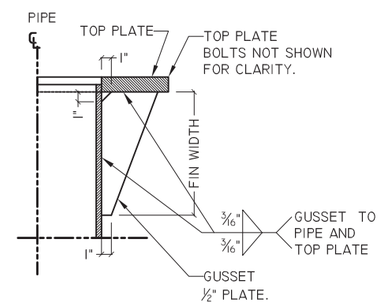

6 DETAIL 2
(GUSSET WELDS)

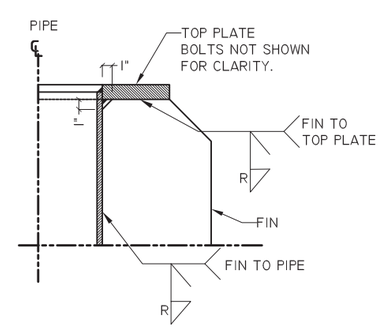

7 DETAIL 3
(FIN WELDS)

4/28/2015

COMMONWEALTH OF PENNSYLVANIA REGISTERED PROFESSIONAL JASON R. TRUCKENBROD ENGINEER No. 41784-E

APR. 2, 2015

METAL FOUNDATIONS - ALL RIGHTS OF THIS TECHNOLOGY AND DESIGN ARE PROPERTY OF SHANER INDUSTRIES. UNAUTHORIZED USE OF THIS CONTENT WITHOUT EXPRESS WRITTEN PERMISSION IS SUBJECT TO LEGAL ACTION AND WILL BE PURSUED TO THE FULLEST EXTENT.

THIS DRAWING IS THE PROPERTY OF "SHANER INDUSTRIES", IT IS MADE FOR EXCLUSIVE USE OF "SHANER INDUSTRIES". NEITHER THE DRAWING OR REPRODUCTION OF IT NOR INFORMATION DERIVED FROM IT IS TO BE GIVEN TO OTHERS WITHOUT THE EXPRESSED CONSENT OF "SHANER INDUSTRIES". NO USE IS TO BE MADE OF IT WHICH IS OR MAY BE IN ANY WAY INJURIOUS TO AND/OR CONTRARY TO THE INTERESTS OF "SHANER INDUSTRIES". "SHANER INDUSTRIES" MAKES NO REPRESENTATIONS OR WARRANTIES AS TO ANY USE OF THIS DRAWING OTHER THAN THAT OF WHICH "SHANER INDUSTRIES" ORIGINALLY INTENDED. THIS FOUNDATION TYPE IS COVERED UNDER U.S. PATENT No 5,570,975.

REV. 0	03-31-2015	FINAL ISSUE	

STATE: PA
JOB NUMBER:
PROJECT: COMMONWEALTH OF PENNSYLVANIA, DEPARTMENT OF TRANSPORTATION, BUREAU OF PROJECT DELIVERY.
DESCRIPTION: METAL FOUNDATIONS FOR DYNAMIC MESSAGE SIGN STRUCTURES.

SHANER INDUSTRIES
930 GLENWOOD AVE.
AMBRIDGE, PA 15003
1-855-356-3825
T 724-266-1066
F 724-266-1006

CLIENT: PENNDOT	
DRAWN BY: DL	SCALE: N.T.S.
CHECKED BY: CH	
DATE: 10-18-2014	
DRAWING NUMBER: 14-603-BDTD	

TABLE 1: SINGLE SIGN FRONT DMS PANEL WITH FRONT ACCESS CATWALK

METAL FOUNDATION DATA FOR SINGLE SIGN FRONT & BACK DMS PANEL WITH FRONT ACCESS CATWALK - CENTER MOUNT - CASE I SOIL PARAMETERS (NO SITE SPECIFIC SOIL DATA)																						
DYNAMIC MESSAGE SIGNS			TOP PLATE			STUDS/BOLTS		PIPE DIMENSION				FIN DIMENSION							WEIGHT NON GALVANIZED	GROUND LOAD REACTIONS			
DESIGN HEIGHT	SIGN AREA	COLUMN SIZE	T	SIZE TYPE	YIELD KSI	QTY.	STUDS DIAMETER	DIAMETER & WALL	LENGTH	WELD PIPE-TOP PLATE	YIELD KSI	WIDTH & THICKNESS	LENGTH	WELD FIN-PIPE + REINFORCING		WELD FIN-TOP PLATE + REINFORCING		YIELD KSI	LBS	OVERTURNING MOMENT	TORSIONAL MOMENT	SHEAR	AXIAL
(FT)	(SF)	(IN)													R		R			KIP-FT	KIP-FT	KIPS	KIPS
16	50	20x0.375	1.25"	Y	36	8	Ø2.00"	20"Ø -0.375" WALL	21'- 6"	1/4"	35	14" -0.375"	13'- 0"	CJP	1/4"	CJP		36	2,830	36.36	2.21	2.24	2.35
	100	20x0.375	1.25"	Y	36	8	Ø2.00"	20"Ø -0.375" WALL	21'- 6"	1/4"	35	14" -0.375"	13'- 0"	CJP	1/4"	CJP		36	2,830	70.38	7.75	4.2	3.82
	150	20x0.375	1.75"	Y	36	8	Ø2.00"	20"Ø -0.375" WALL	28'- 0"	1/4"	35	13" - 0.50"	21'- 0"	CJP		CJP		36	4,356	100.81	13.27	6.06	4.81
	200	20x0.375	1.75"	Y	36	8	Ø2.00"	20"Ø -0.375" WALL	28'- 0"	1/4"	35	13" - 0.50"	21'- 0"	CJP		CJP		36	4,356	134.6	22.12	7.91	6.63
	250	24x0.50	2.25"	Y	36	8	Ø2.25"	20"Ø -0.375" WALL	33'- 0"	1/4"	35	18" - 0.625"	26'- 0"	CJP		CJP	1/4"	36	7,124	166.66	34.57	9.88	8.07
	300	24x0.50	2.25"	Y	36	8	Ø2.25"	24"Ø -0.375" WALL	34'- 0"	1/4"	35	21" - 0.625"	27'- 0"	CJP	1/4"	CJP	1/4"	36	8,467	198.43	53.1	11.82	9.81
20	50	20x0.375	1.25"	Y	36	8	Ø2.00"	20"Ø -0.375" WALL	21'- 6"	1/4"	35	14" -0.375"	13'- 0"	CJP	1/4"	CJP		36	2,830	45.45	2.21	2.3	2.58
	100	20x0.375	1.25"	Y	36	8	Ø2.00"	20"Ø -0.375" WALL	21'- 6"	1/4"	35	14" -0.375"	13'- 0"	CJP	1/4"	CJP		36	2,830	87.3	7.75	4.26	4.06
	150	20x0.375	1.75"	Y	36	8	Ø2.00"	20"Ø -0.375" WALL	28'- 0"	1/4"	35	13" - 0.50"	21'- 0"	CJP		CJP		36	4,356	125.16	13.27	6.12	5.04
	200	24x0.50	2.25"	Y	36	8	Ø2.25"	20"Ø -0.375" WALL	33'- 0"	1/4"	35	18" - 0.625"	26'- 0"	CJP		CJP	1/4"	36	7,124	166.84	22.12	8.05	7.24
	250	24x0.50	2.25"	Y	36	8	Ø2.25"	20"Ø -0.375" WALL	33'- 0"	1/4"	35	18" - 0.625"	26'- 0"	CJP		CJP	1/4"	36	7,124	206.32	34.57	9.95	8.45
	300	24x0.50	2.25"	Y	36	8	Ø2.25"	24"Ø -0.375" WALL	34'- 0"	1/4"	35	21" - 0.625"	27'- 0"	CJP	1/4"	CJP	1/4"	36	8,467	245.86	53.1	11.9	10.19
24	50	20x0.375	1.25"	Y	36	8	Ø2.00"	20"Ø -0.375" WALL	21'- 6"	1/4"	35	14" -0.375"	13'- 0"	CJP	1/4"	CJP		36	2,830	54.8	2.21	2.37	2.82
	100	20x0.375	1.75"	Y	36	8	Ø2.00"	20"Ø -0.375" WALL	28'- 0"	1/4"	35	13" - 0.50"	21'- 0"	CJP		CJP		36	4,356	104.48	7.75	4.32	4.3
	150	20x0.375	1.75"	Y	36	8	Ø2.00"	20"Ø -0.375" WALL	28'- 0"	1/4"	35	13" - 0.50"	21'- 0"	CJP		CJP		36	4,356	149.76	13.27	6.18	5.28
	200	24x0.50	2.25"	Y	36	8	Ø2.25"	20"Ø -0.375" WALL	33'- 0"	1/4"	35	18" - 0.625"	26'- 0"	CJP		CJP	1/8"	36	7,124	199.21	22.12	8.13	7.62
	250	24x0.50	2.25"	Y	36	8	Ø2.25"	24"Ø -0.375" WALL	34'- 0"	1/4"	35	21" - 0.625"	27'- 0"	CJP	1/4"	CJP	1/4"	36	8,467	246.28	34.57	10.04	8.82
	300	24x0.50	2.25"	Y	36	8	Ø2.25"	24"Ø -0.375" WALL	34'- 0"	1/4"	35	21" - 0.625"	27'- 0"	CJP	1/4"	CJP	1/4"	36	8,467	293.6	53.1	11.97	10.57
28	50	20x0.375	1.25"	Y	36	8	Ø2.00"	20"Ø -0.375" WALL	21'- 6"	1/4"	35	14" -0.375"	13'- 0"	CJP	1/4"	CJP		36	2,830	64.4	2.21	2.43	3.06
	100	20x0.375	1.75"	Y	36	8	Ø2.00"	20"Ø -0.375" WALL	28'- 0"	1/4"	35	13" - 0.50"	21'- 0"	CJP		CJP		36	4,356	121.91	7.75	4.39	4.53
	150	24x0.50	2.25"	Y	36	8	Ø2.25"	20"Ø -0.375" WALL	33'- 0"	1/4"	35	18" - 0.625"	26'- 0"	CJP		CJP	1/4"	36	7,124	176.09	13.27	6.34	6.58
	200	24x0.50	2.25"	Y	36	8	Ø2.25"	20"Ø -0.375" WALL	33'- 0"	1/4"	35	18" - 0.625"	26'- 0"	CJP		CJP	1/4"	36	7,124	231.86	22.12	8.20	8
	250	24x0.50	2.25"	Y	36	8	Ø2.25"	24"Ø -0.375" WALL	34'- 0"	1/4"	35	21" - 0.625"	27'- 0"	CJP	1/4"	CJP	1/4"	36	8,467	286.56	34.57	10.11	9.2
	300	24x0.938	2.25"	X	36	16	Ø2.00"	24"Ø -0.375" WALL	34'- 0"	1/4"	35	21" - 0.625"	27'- 0"	CJP		CJP	1/4"	36	8,467	341.64	53.1	12.05	13.35

TABLE 2: DOUBLE SIGN FRONT AND BACK DMS PANELS WITH FRONT ACCESS CATWALK

METAL FOUNDATION DATA FOR DOUBLE SIGN FRONT & BACK DMS PANEL WITH FRONT ACCESS CATWALK - CENTER MOUNT - CASE I SOIL PARAMETERS (NO SITE SPECIFIC SOIL DATA)																							
DYNAMIC MESSAGE SIGNS			TOP PLATE			STUDS/BOLTS		PIPE DIMENSION				FIN DIMENSION							WEIGHT NON GALVANIZED	GROUND LOAD REACTIONS			
DESIGN HEIGHT	SIGN AREA	COLUMN SIZE	T	SIZE TYPE	YIELD KSI	QTY.	STUDS DIAMETER	DIAMETER & WALL	LENGTH	WELD PIPE-TOP PLATE	YIELD KSI	WIDTH & THICKNESS	LENGTH	WELD FIN-PIPE + REINFORCING		WELD FIN-TOP PLATE + REINFORCING		YIELD KSI	LBS	OVERTURNING MOMENT	TORSIONAL MOMENT	SHEAR	AXIAL
(FT)	(SF)	(IN)													R		R			KIP-FT	KIP-FT	KIPS	KIPS
16	50	20x0.375	1.25"	Y	36	8	Ø2.00"	20"Ø -0.375" WALL	21'- 6"	1/4"	35	14" -0.375"	13'- 0"	CJP	1/4"	CJP		36	2,830	33.83	2.21	2.24	3.29
	100	20x0.375	1.25"	Y	36	8	Ø2.00"	20"Ø -0.375" WALL	21'- 6"	1/4"	35	14" -0.375"	13'- 0"	CJP	1/4"	CJP		36	2,830	65.16	7.75	4.2	5.85
	150	20x0.375	1.25"	Y	36	8	Ø2.00"	20"Ø -0.375" WALL	21'- 6"	1/4"	35	14" -0.375"	13'- 0"	CJP	1/4"	CJP		36	2,830	94.88	13.27	6.06	7.79
	200	20x0.375	1.75"	Y	36	8	Ø2.00"	20"Ø -0.375" WALL	28'- 0"	1/4"	35	13" - 0.50"	21'- 0"	CJP		CJP		36	4,356	124.61	22.12	7.91	10.73
	250	24x0.50	2.25"	Y	36	8	Ø2.25"	20"Ø -0.375" WALL	33'- 0"	1/4"	35	18" - 0.625"	26'- 0"	CJP		CJP	1/4"	36	7,124	155.64	34.57	9.88	12.63
	300	24x0.50	2.25"	Y	36	8	Ø2.25"	24"Ø -0.375" WALL	34'- 0"	1/4"	35	21" - 0.625"	27'- 0"	CJP	1/4"	CJP	1/4"	36	8,467	186.71	53.1	11.82	15.63
20	50	20x0.375	1.25"	Y	36	8	Ø2.00"	20"Ø -0.375" WALL	21'- 6"	1/4"	35	14" -0.375"	13'- 0"	CJP	1/4"	CJP		36	2,830	42.92	2.21	2.3	3.53
	100	20x0.375	1.25"	Y	36	8	Ø2.00"	20"Ø -0.375" WALL	21'- 6"	1/4"	35	14" -0.375"	13'- 0"	CJP	1/4"	CJP		36	2,830	82.09	7.75	4.26	6.09
	150	20x0.375	1.75"	Y	36	8	Ø2.00"	20"Ø -0.375" WALL	28'- 0"	1/4"	35	13" - 0.50"	21'- 0"	CJP		CJP		36	4,356	119.23	13.27	6.12	8.02
	200	24x0.50	2.25"	Y	36	8	Ø2.25"	20"Ø -0.375" WALL	33'- 0"	1/4"	35	18" - 0.625"	26'- 0"	CJP		CJP	1/4"	36	7,124	157.2	22.12	8.05	11.34
	250	24x0.50	2.25"	Y	36	8	Ø2.25"	20"Ø -0.375" WALL	33'- 0"	1/4"	35	18" - 0.625"	26'- 0"	CJP		CJP	1/4"	36	7,124	195.3	34.57	9.95	13.01
	300	24x0.50	2.25"	Y	36	8	Ø2.25"	24"Ø -0.375" WALL	34'- 0"	1/4"	35	21" - 0.625"	27'- 0"	CJP	1/4"	CJP	1/4"	36	8,467	234.14	53.1	11.9	16.01
24	50	20x0.375	1.25"	Y	36	8	Ø2.00"	20"Ø -0.375" WALL	21'- 6"	1/4"	35	14" -0.375"	13'- 0"	CJP	1/4"	CJP		36	2,830	52.26	2.21	2.37	3.76
	100	20x0.375	1.75"	Y	36	8	Ø2.00"	20"Ø -0.375" WALL	28'- 0"	1/4"	35	13" - 0.50"	21'- 0"	CJP		CJP		36	4,356	99.26	7.75	4.32	6.33
	150	20x0.375	1.75"	Y	36	8	Ø2.00"	20"Ø -0.375" WALL	28'- 0"	1/4"	35	13" - 0.50"	21'- 0"	CJP		CJP		36	4,356	143.83	13.27	6.18	8.26
	200	24x0.50	2.25"	Y	36	8	Ø2.25"	20"Ø -0.375" WALL	33'- 0"	1/4"	35	18" - 0.625"	26'- 0"	CJP		CJP	1/4"	36	7,124	189.55	22.12	8.13	11.72
	250	24x0.50	2.25"	Y	36	8	Ø2.25"	20"Ø -0.375" WALL	33'- 0"	1/4"	35	18" - 0.625"	26'- 0"	CJP		CJP	1/4"	36	7,124	235.27	34.57	10.04	13.39
	300	24x0.50	2.25"	Y	36	8	Ø2.25"	24"Ø -0.375" WALL	34'- 0"	1/4"	35	21" - 0.625"	27'- 0"	CJP	1/4"	CJP	1/4"	36	8,467	281.88	53.1	11.97	16.38
28	50	20x0.375	1.25"	Y	36	8	Ø2.00"	20"Ø -0.375" WALL	21'- 6"	1/4"	35	14" -0.375"	13'- 0"	CJP	1/4"	CJP		36	2,830	61.86	2.21	2.43	4
	100	20x0.375	1.75"	Y	36	8	Ø2.00"	20"Ø -0.375" WALL	28'- 0"	1/4"	35	13" - 0.50"	21'- 0"	CJP		CJP		36	4,356	116.7	7.75	4.39	6.56
	150	24x0.50	2.25"	Y	36	8	Ø2.25"	20"Ø -0.375" WALL	33'- 0"	1/4"	35	18" - 0.625"	26'- 0"	CJP		CJP	1/4"	36	7,124	170.17	13.27	6.34	9.56
	200	24x0.50	2.25"	Y	36	8	Ø2.25"	20"Ø -0.375" WALL	33'- 0"	1/4"	35	18" - 0.625"	26'- 0"	CJP		CJP	1/4"	36	7,124	222.2	22.12	8.20	12.09
	250	24x0.50	2.25"	Y	36	8	Ø2.25"	24"Ø -0.375" WALL	34'- 0"	1/4"	35	21" - 0.625"	27'- 0"	CJP	1/4"	CJP	1/4"	36	8,467	275.54	34.57	10.11	13.76
	300	24x0.938	2.25"	X	36	16	Ø2.00"	24"Ø -0.375" WALL	34'- 0"	1/4"	35	21" - 0.625"	27'- 0"	CJP		CJP	1/4"	36	8,467	329.93	53.1	12.05	19.16

4/28/2015

NOTES:

GENERAL:

1. THIS STANDARD IS APPLICABLE TO DMS STRUCTURES ONLY.

FABRICATION TOLERANCES:

1. UNLESS OTHERWISE SPECIFIED ALL FABRICATION TOLERANCES ARE:
   LINEAR TOLERANCES - 0"/±1/8"
   ANGULAR TOLERANCES - 0°/±1°.

INSTALLATION TOLERANCES & METHOD:

1. PLUMBNESS WITHIN 1.5" OVER FOUNDATION FULL LENGTH.
2. CENTER OF FOUNDATION WITHIN APPROXIMATELY 3" OF PLANNED LOCATION IN ALL DIRECTIONS.
3. FOUNDATION ORIENTATION WITHIN 7° OF DESIGN ORIENTATION UNLESS OTHERWISE PERMITTED BY ENGINEER.
4. FOUNDATION INSTALLED IN CONFORMITY WITH LINES, GRADES, ORIENTATIONS AND LOCATION SHOWN ON CONTRACT DRAWINGS.
5. PRE-DRILLING MAY BE REQUIRED. SHANER INDUSTRIES RESERVE THE RIGHT TO SELECT THE PREFERRED METHOD OF INSTALLATION FOR EACH SITE AND FOUNDATION TYPE.

MATERIAL NOTES: (PROVIDE MILL CERTS ON ALL MATERIALS)

1. PIPE — ASTM A53 - GR B, 35 KSI.
2. FINS — ASTM A36 - GR 36 & ASTM A572 - GR 50.
3. PLATE — ASTM A36 - GR 36 & ASTM A572 - GR 50.
4. FABRICATION — FABRICATE IN ACCORDANCE WITH AASHTO AWS DI.IM/DI.1-2008 AND PUBLICATION 408, SECTION 1105. FABRICATE IN A BULLETIN 15 APPROVED SHOP HAVING SBR CERTIFICATION.
5. FINISH — H.D. GALVANIZED TO ASTM A123.

FOUNDATION HARDWARE:

1. STUDS — 24" L., ASTM A193 GR. B7 - 105 KSI MIN..
2. NUTS — ASTM A194 GR. 2H.
3. WASHERS — ASTM F436.
4. FINISH — H.D. GALVANIZED TO ASTM A153.

COMMONWEALTH OF PENNSYLVANIA
REGISTERED PROFESSIONAL
JASON R. TRUCKENBROD
ENGINEER
No. 51728-E

3-24-15

METAL FOUNDATIONS - ALL RIGHTS OF THIS TECHNOLOGY AND DESIGN ARE PROPERTY OF SHANER INDUSTRIES. UNAUTHORIZED USE OF THIS CONTENT WITHOUT EXPRESS WRITTEN PERMISSION IS SUBJECT TO LEGAL ACTION AND WILL BE PURSUED TO THE FULLEST EXTENT.

THIS DRAWING IS THE PROPERTY OF "SHANER INDUSTRIES", IT IS MADE FOR EXCLUSIVE USE OF "SHANER INDUSTRIES". NEITHER THE DRAWING OR REPRODUCTION OF IT NOR INFORMATION DERIVED FROM IT IS TO BE GIVEN TO OTHERS WITHOUT THE EXPRESSED CONSENT OF "SHANER INDUSTRIES". NO USE IS TO BE MADE OF IT WHICH IS OR MAY BE IN ANY WAY INJURIOUS TO AND/OR CONTRARY TO THE INTERESTS OF "SHANER INDUSTRIES". "SHANER INDUSTRIES" MAKES NO REPRESENTATIONS OR WARRANTIES AS TO ANY USE OF THIS DRAWING OTHER THAN THAT OF WHICH "SHANER INDUSTRIES" ORIGINALLY INTENDED. THIS FOUNDATION TYPE IS COVERED UNDER U.S. PATENT No 5,570,975.

REV. 0	03-12-2015	FINAL ISSUE	

STATE: PA
JOB NUMBER:
PROJECT: COMMONWEALTH OF PENNSYLVANIA, DEPARTMENT OF TRANSPORTATION, BUREAU OF PROJECT DELIVERY.
DESCRIPTION: METAL FOUNDATIONS FOR DYNAMIC MESSAGE SIGN STRUCTURES.

SHANER INDUSTRIES
930 GLENWOOD AVE.
AMBRIDGE, PA 15003
1-855-356-3825
T 724-266-1066
F 724-266-1006

CLIENT: PENNDOT	
DRAWN BY: DL	SCALE: N.T.S.
CHECKED BY: CH	
DATE: 10-18-2014	
DRAWING NUMBER: 14-603-BDTD	

TABLE 3: SINGLE SIGN DMS PANEL WITH WALK-IN ACCESS PLATFORM

METAL FOUNDATION DATA FOR SINGLE SIGN FRONT & BACK DMS PANEL WITH WALK-IN ACCESS PLATFORM - CENTER MOUNT - CASE I SOIL PARAMETERS (NO SITE SPECIFIC SOIL DATA)																							
DYNAMIC MESSAGE SIGNS			TOP PLATE			STUDS/BOLTS		PIPE DIMENSION				FIN DIMENSION						WEIGHT NON GALVANIZED	GROUND LOAD REACTIONS			
DESIGN HEIGHT	SIGN AREA	COLUMN SIZE	T	SIZE TYPE	YIELD KSI	QTY.	STUDS DIAMETER	DIAMETER & WALL	LENGTH	WELD PIPE-TOP PLATE	YIELD KSI	WIDTH & THICKNESS	LENGTH	WELD FIN-PIPE + REINFORCING	R	WELD FIN-TOP PLATE + REINFORCING	R	YIELD KSI	LBS	OVERTURNING MOMENT	TORSIONAL MOMENT	SHEAR	AXIAL
(FT)	(SF)	(IN)																		KIP-FT	KIP-FT	KIPS	KIPS
16	200	20X0.375	2.00"	Y	36	8	Ø2.00"	20"Ø -0.375" WALL	33'- 0"	1/4"	35	18" - 0.625"	26'- 0"	CJP		CJP	1/4"	36	6,865	155.74	31.98	8.76	7.43
	250	24X0.50	2.25"	Y	36	8	Ø2.25"	24"Ø -0.375" WALL	34'- 0"	1/4"	35	21" - 0.625"	27'- 0"	CJP	1/4"	CJP	1/4"	36	8,467	192.15	46.54	10.86	9.56
	300	24X0.50	2.00"	Y	50	8	Ø2.25"	24"Ø -0.375" WALL	37'- 0"	3/8"	35	21" - 0.750"	29'- 0"	CJP		CJP	5/16"	50	9,812	232.79	63.88	13.06	12.01
20	200	24X0.50	2.25"	Y	36	8	Ø2.25"	20"Ø -0.375" WALL	33'- 0"	1/4"	35	18" - 0.625"	26'- 0"	CJP		CJP	1/4"	36	7,124	191.67	31.98	8.89	8.46
	250	24X0.50	2.25"	Y	36	8	Ø2.25"	24"Ø -0.375" WALL	34'- 0"	1/4"	35	21" - 0.625"	27'- 0"	CJP	1/4"	CJP	1/4"	36	8,467	235.65	46.54	10.93	9.94
	300	24X0.50	2.00"	Y	50	8	Ø2.25"	24"Ø -0.375" WALL	37'- 0"	3/8"	35	21" - 0.750"	29'- 0"	CJP		CJP	5/16"	50	9,812	285.12	63.88	13.15	12.39
24	200	24X0.50	2.25"	Y	36	8	Ø2.25"	20"Ø -0.375" WALL	33'- 0"	1/4"	35	18" - 0.625"	26'- 0"	CJP		CJP	1/4"	36	7,124	227.38	31.98	8.97	8.84
	250	24X0.50	2.25"	Y	36	8	Ø2.25"	24"Ø -0.375" WALL	34'- 0"	1/4"	35	21" - 0.625"	27'- 0"	CJP	1/4"	CJP	1/4"	36	8,467	279.5	46.54	11.01	10.32
	300	24X0.938	2.00"	X	50	16	Ø2.00"	24"Ø -0.375" WALL	37'- 0"	3/8"	35	21" - 0.750"	29'- 0"	CJP		CJP	5/16"	50	9,812	337.78	63.88	13.22	14.86
28	200	24X0.50	2.25"	Y	36	8	Ø2.25"	24"Ø -0.375" WALL	34'- 0"	1/4"	35	21" - 0.625"	27'- 0"	CJP	1/4"	CJP	1/4"	36	8,467	263.4	31.98	9.04	9.21
	250	24X0.938	2.25"	X	36	16	Ø2.00"	24"Ø -0.375" WALL	34'- 0"	1/4"	35	21" - 0.625"	27'- 0"	CJP		CJP	1/4"	36	8,467	323.65	46.54	11.08	13.11
	300	24X0.938	2.00"	X	50	16	Ø2.00"	24"Ø -0.375" WALL	37'- 0"	3/8"	35	21" - 0.750"	29'- 0"	CJP		CJP	5/16"	50	9,812	390.77	63.88	13.3	15.56

TABLE 4: DOUBLE SIGN DMS PANELS WITH WALK-IN ACCESS PLATFORMS

METAL FOUNDATION DATA FOR DOUBLE SIGN FRONT & BACK DMS PANEL WITH WALK-IN ACCESS PLATFORM - CENTER MOUNT- CASE I SOIL PARAMETERS (NO SITE SPECIFIC SOIL DATA)																							
DYNAMIC MESSAGE SIGNS			TOP PLATE			STUDS/BOLTS		PIPE DIMENSION				FIN DIMENSION						WEIGHT NON GALVANIZED	GROUND LOAD REACTIONS			
DESIGN HEIGHT	SIGN AREA	COLUMN SIZE	T	SIZE TYPE	YIELD KSI	QTY.	STUDS DIAMETER	DIAMETER & WALL	LENGTH	WELD PIPE-TOP PLATE	YIELD KSI	WIDTH & THICKNESS	LENGTH	WELD FIN-PIPE + REINFORCING	R	WELD FIN-TOP PLATE + REINFORCING	R	YIELD KSI	LBS	OVERTURNING MOMENT	TORSIONAL MOMENT	SHEAR	AXIAL
(FT)	(SF)	(IN)																		KIP-FT	KIP-FT	KIPS	KIPS
16	200	20X0.375	2.00"	Y	36	8	Ø2.00"	20"Ø -0.375" WALL	33'- 0"	1/4"	35	18" - 0.625"	26'- 0"	CJP		CJP	1/4"	36	6,865	143.43	31.98	8.76	11.74
	250	24X0.50	2.25"	Y	36	8	Ø2.25"	24"Ø -0.375" WALL	34'- 0"	1/4"	35	21" - 0.625"	27'- 0"	CJP	1/4"	CJP	1/4"	36	8,467	177.74	46.54	10.86	14.49
	300	24X0.50	2.00"	Y	50	8	Ø2.25"	24"Ø -0.375" WALL	37'- 0"	3/8"	35	21" - 0.750"	29'- 0"	CJP		CJP	5/16"	50	9,812	214.73	63.88	13.06	17.88
20	200	24X0.50	2.25"	Y	36	8	Ø2.25"	20"Ø -0.375" WALL	33'- 0"	1/4"	35	18" - 0.625"	26'- 0"	CJP		CJP	1/4"	36	7,124	179.14	31.98	8.89	12.77
	250	24X0.50	2.25"	Y	36	8	Ø2.25"	24"Ø -0.375" WALL	34'- 0"	1/4"	35	21" - 0.625"	27'- 0"	CJP	1/4"	CJP	1/4"	36	8,467	221	46.54	10.93	14.87
	300	24X0.50	2.00"	Y	50	8	Ø2.25"	24"Ø -0.375" WALL	37'- 0"	3/8"	35	21" - 0.750"	29'- 0"	CJP		CJP	5/16"	50	9,812	266.74	63.88	13.15	18.26
24	200	24X0.50	2.25"	Y	36	8	Ø2.25"	20"Ø -0.375" WALL	33'- 0"	1/4"	35	18" - 0.625"	26'- 0"	CJP		CJP	1/4"	36	7,124	214.7	31.98	8.97	13.14
	250	24X0.50	2.25"	Y	36	8	Ø2.25"	24"Ø -0.375" WALL	34'- 0"	1/4"	35	21" - 0.625"	27'- 0"	CJP	1/4"	CJP	1/4"	36	8,467	264.67	46.54	11.01	15.24
	300	24X0.938	2.00"	X	50	16	Ø2.00"	24"Ø -0.375" WALL	37'- 0"	3/8"	35	21" - 0.750"	29'- 0"	CJP		CJP	5/16"	50	9,812	319.18	63.88	13.22	20.73
28	200	24X0.50	2.25"	Y	36	8	Ø2.25"	24"Ø -0.375" WALL	34'- 0"	1/4"	35	21" - 0.625"	27'- 0"	CJP	1/4"	CJP	1/4"	36	8,467	250.62	31.98	9.04	13.52
	250	24X0.938	2.25"	X	36	16	Ø2.00"	24"Ø -0.375" WALL	34'- 0"	1/4"	35	21" - 0.625"	27'- 0"	CJP		CJP	1/4"	36	8,467	308.7	46.54	11.08	18.04
	300	24X0.938	2.00"	X	50	16	Ø2.00"	24"Ø -0.375" WALL	37'- 0"	3/8"	35	21" - 0.750"	29'- 0"	CJP		CJP	5/16"	50	9,812	372.01	63.88	13.3	21.43

NOTES:

GENERAL:

1. THIS STANDARD IS APPLICABLE TO DMS STRUCTURES ONLY.

FABRICATION TOLERANCES:

1. UNLESS OTHERWISE SPECIFIED ALL FABRICATION TOLERANCES ARE:
   LINEAR TOLERANCES - 0"/±1/8"
   ANGULAR TOLERANCES - 0°/±1°.

INSTALLATION TOLERANCES & METHOD:

1. PLUMBNESS WITHIN 1.5" OVER FOUNDATION FULL LENGTH.
2. CENTER OF FOUNDATION WITHIN APPROXIMATELY 3" OF PLANNED LOCATION IN ALL DIRECTIONS.
3. FOUNDATION ORIENTATION WITHIN 7° OF DESIGN ORIENTATION UNLESS OTHERWISE PERMITTED BY ENGINEER.
4. FOUNDATION INSTALLED IN CONFORMITY WITH LINES, GRADES, ORIENTATIONS AND LOCATION SHOWN ON CONTRACT DRAWINGS.
5. PRE-DRILLING MAY BE REQUIRED. SHANER INDUSTRIES RESERVE THE RIGHT TO SELECT THE PREFERRED METHOD OF INSTALLATION FOR EACH SITE AND FOUNDATION TYPE.

MATERIAL NOTES: (PROVIDE MILL CERTS ON ALL MATERIALS)

1. PIPE — ASTM A53 - GR B, 35 KSI.
2. FINS — ASTM A36 - GR 36 & ASTM A572 - GR 50.
3. PLATE — ASTM A36 - GR 36 & ASTM A572 - GR 50.
4. FABRICATION — FABRICATE IN ACCORDANCE WITH AASHTO AWS DI.IM/DI.1-2008 AND PUBLICATION 408, SECTION 1105. FABRICATE IN A BULLETIN 15 APPROVED SHOP HAVING SBR CERTIFICATION.
5. FINISH — H.D. GALVANIZED TO ASTM A123.

FOUNDATION HARDWARE:

1. STUDS — 24" L., ASTM A193 GR. B7 - 105 KSI MIN..
2. NUTS — ASTM A194 GR. 2H.
3. WASHERS — ASTM F436.
4. FINISH — H.D. GALVANIZED TO ASTM A153.

METAL FOUNDATIONS - ALL RIGHTS OF THIS TECHNOLOGY AND DESIGN ARE PROPERTY OF SHANER INDUSTRIES. UNAUTHORIZED USE OF THIS CONTENT WITHOUT EXPRESS WRITTEN PERMISSION IS SUBJECT TO LEGAL ACTION AND WILL BE PURSUED TO THE FULLEST EXTENT.

COMMONWEALTH OF PENNSYLVANIA
REGISTERED PROFESSIONAL
JACOB R. TRUCKENBROD
ENGINEER
No. 077847-E

APR. 2, 2015

4/28/2015

THIS DRAWING IS THE PROPERTY OF "SHANER INDUSTRIES", IT IS MADE FOR EXCLUSIVE USE OF "SHANER INDUSTRIES". NEITHER THE DRAWING OR REPRODUCTION OF IT NOR INFORMATION DERIVED FROM IT IS TO BE GIVEN TO OTHERS WITHOUT THE EXPRESSED CONSENT OF "SHANER INDUSTRIES". NO USE IS TO BE MADE OF IT WHICH IS OR MAY BE IN ANY WAY INJURIOUS TO AND/OR CONTRARY TO THE INTERESTS OF "SHANER INDUSTRIES". "SHANER INDUSTRIES" MAKES NO REPRESENTATIONS OR WARRANTIES AS TO ANY USE OF THIS DRAWING OTHER THAN THAT OF WHICH "SHANER INDUSTRIES" ORIGINALLY INTENDED. THIS FOUNDATION TYPE IS COVERED UNDER U.S. PATENT No 5,570,975.

REV.	DATE	DESCRIPTION
0	03-31-2015	FINAL ISSUE

STATE: PA
JOB NUMBER:
PROJECT: COMMONWEALTH OF PENNSYLVANIA, DEPARTMENT OF TRANSPORTATION, BUREAU OF PROJECT DELIVERY.
DESCRIPTION: METAL FOUNDATIONS FOR DYNAMIC MESSAGE SIGN STRUCTURES.

SHANER INDUSTRIES
930 GLENWOOD AVE.
AMBRIDGE, PA 15003
1-855-356-3825
T 724-266-1066
F 724-266-1006

CLIENT: PENNDOT
DRAWN BY: DL
SCALE: N.T.S.
CHECKED BY: CH
DATE: 10-18-2014
DRAWING NUMBER: 14-603-BDTD

TABLE 5: SINGLE SIGN FRONT DMS PANEL WITH FRONT ACCESS CATWALK

METAL FOUNDATION DATA FOR SINGLE SIGN FRONT & BACK DMS PANEL WITH FRONT ACCESS CATWALK - CENTER MOUNT - CASE 2 SOIL PARAMETERS (SITE SPECIFIC SOIL DATA)																							
DYNAMIC MESSAGE SIGNS			TOP PLATE			STUDS/BOLTS		PIPE DIMENSION				FIN DIMENSION							WEIGHT NON GALVANIZED	GROUND LOAD REACTIONS			
DESIGN HEIGHT	SIGN AREA	COLUMN SIZE	T	SIZE TYPE	YIELD KSI	QTY.	STUDS DIAMETER	DIAMETER & WALL	LENGTH	WELD PIPE-TOP PLATE	YIELD KSI	WIDTH & THICKNESS	LENGTH	WELD FIN-PIPE + REINFORCING		WELD FIN-TOP PLATE + REINFORCING		YIELD KSI	LBS	OVERTURNING MOMENT	TORSIONAL MOMENT	SHEAR	AXIAL
(FT)	(SF)	(IN)													R		R			KIP-FT	KIP-FT	KIPS	KIPS
16	50	20x0.375	1.25"	Y	36	8	Ø2.00"	20"Ø -0.375" WALL	13'- 0"	1/4"	35	5" -0.375"	11'- 0"	CJP		CJP		36	1,539	36.36	2.21	2.24	2.35
	100	20x0.375	1.25"	Y	36	8	Ø2.00"	20"Ø -0.375" WALL	13'- 0"	1/4"	35	5" -0.375"	11'- 0"	CJP		CJP		36	1,539	70.38	7.75	4.2	3.82
	150	20x0.375	1.75"	Y	36	8	Ø2.00"	20"Ø -0.375" WALL	15'- 6"	1/4"	35	9" - 0.375"	10'- 6"	CJP	1/4"	CJP		36	2,029	100.81	13.27	6.06	4.81
	200	20x0.375	1.75"	Y	36	8	Ø2.00"	20"Ø -0.375" WALL	15'- 6"	1/4"	35	9" - 0.375"	10'- 6"	CJP	1/4"	CJP		36	2,029	134.6	22.12	7.91	6.63
	250	24x0.50	2.25"	Y	36	8	Ø2.25"	20"Ø -0.375" WALL	18'- 6"	1/4"	35	10" - 0.50"	13'- 0"	CJP		CJP		36	2,679	166.66	34.57	9.88	8.07
	300	24x0.50	2.25"	Y	36	8	Ø2.25"	24"Ø -0.375" WALL	19'- 0"	1/4"	35	12" - 0.50"	14'- 0"	CJP	1/4"	CJP		36	3,403	198.43	53.1	11.82	9.81
20	50	20x0.375	1.25"	Y	36	8	Ø2.00"	20"Ø -0.375" WALL	13'- 0"	1/4"	35	5" -0.375"	11'- 0"	CJP		CJP		36	1,539	45.45	2.21	2.3	2.58
	100	20x0.375	1.25"	Y	36	8	Ø2.00"	20"Ø -0.375" WALL	13'- 0"	1/4"	35	5" -0.375"	11'- 0"	CJP		CJP		36	1,539	87.3	7.75	4.26	4.06
	150	20x0.375	1.75"	Y	36	8	Ø2.00"	20"Ø -0.375" WALL	15'- 6"	1/4"	35	9" - 0.375"	10'- 6"	CJP	1/4"	CJP		36	2,029	125.16	13.27	6.12	5.04
	200	24x0.50	2.25"	Y	36	8	Ø2.25"	20"Ø -0.375" WALL	18'- 6"	1/4"	35	10" - 0.50"	13'- 0"	CJP		CJP		36	2,679	166.84	22.12	8.05	7.24
	250	24x0.50	2.25"	Y	36	8	Ø2.25"	20"Ø -0.375" WALL	18'- 6"	1/4"	35	10" - 0.50"	13'- 0"	CJP		CJP		36	2,679	206.32	34.57	9.95	8.45
	300	24x0.50	2.25"	Y	36	8	Ø2.25"	24"Ø -0.375" WALL	19'- 0"	1/4"	35	12" - 0.50"	14'- 0"	CJP	1/4"	CJP		36	3,403	245.86	53.1	11.9	10.19
24	50	20x0.375	1.25"	Y	36	8	Ø2.00"	20"Ø -0.375" WALL	13'- 0"	1/4"	35	5" -0.375"	11'- 0"	CJP		CJP		36	1,539	54.8	2.21	2.37	2.82
	100	20x0.375	1.75"	Y	36	8	Ø2.00"	20"Ø -0.375" WALL	15'- 6"	1/4"	35	9" - 0.375"	10'- 6"	CJP	1/4"	CJP		36	2,029	104.48	7.75	4.32	4.3
	150	20x0.375	1.75"	Y	36	8	Ø2.00"	20"Ø -0.375" WALL	15'- 6"	1/4"	35	9" - 0.375"	10'- 6"	CJP	1/4"	CJP		36	2,029	149.76	13.27	6.18	5.28
	200	24x0.50	2.25"	Y	36	8	Ø2.25"	20"Ø -0.375" WALL	18'- 6"	1/4"	35	10" - 0.50"	13'- 0"	CJP		CJP		36	2,679	199.21	22.12	8.13	7.62
	250	24x0.50	2.25"	Y	36	8	Ø2.25"	24"Ø -0.375" WALL	19'- 0"	1/4"	35	12" - 0.50"	14'- 0"	CJP	1/4"	CJP		36	3,403	246.28	34.57	10.04	8.82
	300	24x0.50	2.25"	Y	36	8	Ø2.25"	24"Ø -0.375" WALL	19'- 0"	1/4"	35	12" - 0.50"	14'- 0"	CJP	1/4"	CJP		36	3,403	293.6	53.1	11.97	10.57
28	50	20x0.375	1.25"	Y	36	8	Ø2.00"	20"Ø -0.375" WALL	13'- 0"	1/4"	35	5" -0.375"	11'- 0"	CJP		CJP		36	1,539	64.4	2.21	2.43	3.06
	100	20x0.375	1.75"	Y	36	8	Ø2.00"	20"Ø -0.375" WALL	15'- 6"	1/4"	35	9" - 0.375"	10'- 6"	CJP	1/4"	CJP		36	2,029	121.91	7.75	4.39	4.53
	150	24x0.50	2.25"	Y	36	8	Ø2.25"	20"Ø -0.375" WALL	18'- 6"	1/4"	35	10" - 0.50"	13'- 0"	CJP		CJP		36	2,679	176.09	13.27	6.34	6.58
	200	24x0.50	2.25"	Y	36	8	Ø2.25"	20"Ø -0.375" WALL	18'- 6"	1/4"	35	10" - 0.50"	13'- 0"	CJP	1/4"	CJP		36	2,679	231.86	22.12	8.20	8
	250	24x0.50	2.25"	Y	36	8	Ø2.25"	24"Ø -0.375" WALL	19'- 0"	1/4"	35	12" - 0.50"	14'- 0"	CJP	1/4"	CJP		36	3,403	286.56	34.57	10.11	9.2
	300	24x0.938	2.25"	X	36	16	Ø2.00"	24"Ø -0.375" WALL	19'- 0"	1/4"	35	12" - 0.50"	14'- 0"	CJP	1/4"	CJP		36	3,403	341.64	53.1	12.05	13.35

TABLE 6: DOUBLE SIGN FRONT AND BACK DMS PANELS WITH FRONT ACCESS CATWALK

METAL FOUNDATION DATA FOR DOUBLE SIGN FRONT & BACK DMS PANEL WITH FRONT ACCESS CATWALK - CENTER MOUNT - CASE 2 SOIL PARAMETERS (SITE SPECIFIC SOIL DATA)																							
DYNAMIC MESSAGE SIGNS			TOP PLATE			STUDS/BOLTS		PIPE DIMENSION				FIN DIMENSION							WEIGHT NON GALVANIZED	GROUND LOAD REACTIONS			
DESIGN HEIGHT	SIGN AREA	COLUMN SIZE	T	SIZE TYPE	YIELD KSI	QTY.	STUDS DIAMETER	DIAMETER & WALL	LENGTH	WELD PIPE-TOP PLATE	YIELD KSI	WIDTH & THICKNESS	LENGTH	WELD FIN-PIPE + REINFORCING		WELD FIN-TOP PLATE + REINFORCING		YIELD KSI	LBS	OVERTURNING MOMENT	TORSIONAL MOMENT	SHEAR	AXIAL
(FT)	(SF)	(IN)													R		R			KIP-FT	KIP-FT	KIPS	KIPS
16	50	20x0.375	1.25"	Y	36	8	Ø2.00"	20"Ø -0.375" WALL	13'- 0"	1/4"	35	5" -0.375"	11'- 0"	CJP		CJP		36	1,539	33.83	2.21	2.24	3.29
	100	20x0.375	1.25"	Y	36	8	Ø2.00"	20"Ø -0.375" WALL	13'- 0"	1/4"	35	5" -0.375"	11'- 0"	CJP		CJP		36	1,539	65.16	7.75	4.2	5.85
	150	20x0.375	1.25"	Y	36	8	Ø2.00"	20"Ø -0.375" WALL	13'- 0"	1/4"	35	5" -0.375"	11'- 0"	CJP		CJP		36	1,539	94.88	13.27	6.06	7.79
	200	20x0.375	1.75"	Y	36	8	Ø2.00"	20"Ø -0.375" WALL	15'- 6"	1/4"	35	9" - 0.375"	10'- 6"	CJP	1/4"	CJP		36	2,029	124.61	22.12	7.91	10.73
	250	24x0.50	2.25"	Y	36	8	Ø2.25"	20"Ø -0.375" WALL	18'- 6"	1/4"	35	10" - 0.50"	13'- 0"	CJP		CJP		36	2,679	155.64	34.57	9.88	12.63
	300	24x0.50	2.25"	Y	36	8	Ø2.25"	24"Ø -0.375" WALL	19'- 0"	1/4"	35	12" - 0.50"	14'- 0"	CJP	1/4"	CJP		36	3,403	186.71	53.1	11.82	15.63
20	50	20x0.375	1.25"	Y	36	8	Ø2.00"	20"Ø -0.375" WALL	13'- 0"	1/4"	35	5" -0.375"	11'- 0"	CJP		CJP		36	1,539	42.92	2.21	2.3	3.53
	100	20x0.375	1.25"	Y	36	8	Ø2.00"	20"Ø -0.375" WALL	13'- 0"	1/4"	35	5" -0.375"	11'- 0"	CJP		CJP		36	1,539	82.09	7.75	4.26	6.09
	150	20x0.375	1.75"	Y	36	8	Ø2.00"	20"Ø -0.375" WALL	15'- 6"	1/4"	35	9" - 0.375"	10'- 6"	CJP	1/4"	CJP		36	2,029	119.23	13.27	6.12	8.02
	200	24x0.50	2.25"	Y	36	8	Ø2.25"	20"Ø -0.375" WALL	18'- 6"	1/4"	35	10" - 0.50"	13'- 0"	CJP		CJP		36	2,679	157.2	22.12	8.05	11.34
	250	24x0.50	2.25"	Y	36	8	Ø2.25"	20"Ø -0.375" WALL	18'- 6"	1/4"	35	10" - 0.50"	13'- 0"	CJP		CJP		36	2,679	195.3	34.57	9.95	13.01
	300	24x0.50	2.25"	Y	36	8	Ø2.25"	24"Ø -0.375" WALL	19'- 0"	1/4"	35	12" - 0.50"	14'- 0"	CJP	1/4"	CJP		36	3,403	234.14	53.1	11.9	16.01
24	50	20x0.375	1.25"	Y	36	8	Ø2.00"	20"Ø -0.375" WALL	13'- 0"	1/4"	35	5" -0.375"	11'- 0"	CJP		CJP		36	1,539	52.26	2.21	2.37	3.76
	100	20x0.375	1.75"	Y	36	8	Ø2.00"	20"Ø -0.375" WALL	15'- 6"	1/4"	35	9" - 0.375"	10'- 6"	CJP	1/4"	CJP		36	2,029	99.26	7.75	4.32	6.33
	150	20x0.375	1.75"	Y	36	8	Ø2.00"	20"Ø -0.375" WALL	15'- 6"	1/4"	35	9" - 0.375"	10'- 6"	CJP	1/4"	CJP		36	2,029	143.83	13.27	6.18	8.26
	200	24x0.50	2.25"	Y	36	8	Ø2.25"	20"Ø -0.375" WALL	18'- 6"	1/4"	35	10" - 0.50"	13'- 0"	CJP		CJP		36	2,679	189.55	22.12	8.13	11.72
	250	24x0.50	2.25"	Y	36	8	Ø2.25"	20"Ø -0.375" WALL	18'- 6"	1/4"	35	10" - 0.50"	13'- 0"	CJP		CJP		36	2,679	235.27	34.57	10.04	13.39
	300	24x0.50	2.25"	Y	36	8	Ø2.25"	24"Ø -0.375" WALL	19'- 0"	1/4"	35	12" - 0.50"	14'- 0"	CJP	1/4"	CJP		36	3,403	281.88	53.1	11.97	16.38
28	50	20x0.375	1.25"	Y	36	8	Ø2.00"	20"Ø -0.375" WALL	13'- 0"	1/4"	35	5" -0.375"	11'- 0"	CJP		CJP		36	1,539	61.86	2.21	2.43	4
	100	20x0.375	1.75"	Y	36	8	Ø2.00"	20"Ø -0.375" WALL	15'- 6"	1/4"	35	9" - 0.375"	10'- 6"	CJP	1/4"	CJP		36	2,029	116.7	7.75	4.39	6.56
	150	24x0.50	2.25"	Y	36	8	Ø2.25"	20"Ø -0.375" WALL	18'- 6"	1/4"	35	10" - 0.50"	13'- 0"	CJP		CJP		36	2,679	170.17	13.27	6.34	9.56
	200	24x0.50	2.25"	Y	36	8	Ø2.25"	20"Ø -0.375" WALL	18'- 6"	1/4"	35	10" - 0.50"	13'- 0"	CJP		CJP		36	2,679	222.2	22.12	8.20	12.09
	250	24x0.50	2.25"	Y	36	8	Ø2.25"	24"Ø -0.375" WALL	19'- 0"	1/4"	35	12" - 0.50"	14'- 0"	CJP	1/4"	CJP		36	3,403	275.54	34.57	10.11	13.76
	300	24x0.938	2.25"	X	36	16	Ø2.00"	24"Ø -0.375" WALL	19'- 0"	1/4"	35	12" - 0.50"	14'- 0"	CJP	1/4"	CJP		36	3,403	329.93	53.1	12.05	19.16

4/28/2015

NOTES:

GENERAL:

1. THIS STANDARD IS APPLICABLE TO DMS STRUCTURES ONLY.

FABRICATION TOLERANCES:

1. UNLESS OTHERWISE SPECIFIED ALL FABRICATION TOLERANCES ARE:
   LINEAR TOLERANCES - 0"/±1/8"
   ANGULAR TOLERANCES - 0°/±1°.

INSTALLATION TOLERANCES & METHOD:

1. PLUMBNESS WITHIN 1.5" OVER FOUNDATION FULL LENGTH.
2. CENTER OF FOUNDATION WITHIN APPROXIMATELY 3" OF PLANNED LOCATION IN ALL DIRECTIONS.
3. FOUNDATION ORIENTATION WITHIN 7° OF DESIGN ORIENTATION UNLESS OTHERWISE PERMITTED BY ENGINEER.
4. FOUNDATION INSTALLED IN CONFORMITY WITH LINES, GRADES, ORIENTATIONS AND LOCATION SHOWN ON CONTRACT DRAWINGS.
5. PRE-DRILLING MAY BE REQUIRED. SHANER INDUSTRIES RESERVE THE RIGHT TO SELECT THE PREFERRED METHOD OF INSTALLATION FOR EACH SITE AND FOUNDATION TYPE.

MATERIAL NOTES: (PROVIDE MILL CERTS ON ALL MATERIALS)

1. PIPE — ASTM A53 - GR B, 35 KSI.
2. FINS — ASTM A36 - GR 36 & ASTM A572 - GR 50.
3. PLATE — ASTM A36 - GR 36 & ASTM A572 - GR 50.
4. FABRICATION — FABRICATE IN ACCORDANCE WITH AASHTO AWS DI.IM/DI.1-2008 AND PUBLICATION 408, SECTION 1105. FABRICATE IN A BULLETIN 15 APPROVED SHOP HAVING SBR CERTIFICATION.
5. FINISH — H.D. GALVANIZED TO ASTM A123.

FOUNDATION HARDWARE:

1. STUDS — 24" L., ASTM A193 GR. B7 - 105 KSI MIN..
2. NUTS — ASTM A194 GR. 2H.
3. WASHERS — ASTM F436.
4. FINISH — H.D. GALVANIZED TO ASTM A153.

COMMONWEALTH OF PENNSYLVANIA
REGISTERED PROFESSIONAL
JASON R. TRUCKENBROD
ENGINEER
No. 41784-E

APR. 2, 2015

METAL FOUNDATIONS - ALL RIGHTS OF THIS TECHNOLOGY AND DESIGN ARE PROPERTY OF SHANER INDUSTRIES. UNAUTHORIZED USE OF THIS CONTENT WITHOUT EXPRESS WRITTEN PERMISSION IS SUBJECT TO LEGAL ACTION AND WILL BE PURSUED TO THE FULLEST EXTENT.

SHEET 5 OF 6

THIS DRAWING IS THE PROPERTY OF "SHANER INDUSTRIES", IT IS MADE FOR EXCLUSIVE USE OF "SHANER INDUSTRIES". NEITHER THE DRAWING OR REPRODUCTION OF IT NOR INFORMATION DERIVED FROM IT IS TO BE GIVEN TO OTHERS WITHOUT THE EXPRESSED CONSENT OF "SHANER INDUSTRIES". NO USE IS TO BE MADE OF IT WHICH IS OR MAY BE IN ANY WAY INJURIOUS TO AND/OR CONTRARY TO THE INTERESTS OF "SHANER INDUSTRIES". "SHANER INDUSTRIES" MAKES NO REPRESENTATIONS OR WARRANTIES AS TO ANY USE OF THIS DRAWING OTHER THAN THAT OF WHICH "SHANER INDUSTRIES" ORIGINALLY INTENDED. THIS FOUNDATION TYPE IS COVERED UNDER U.S. PATENT No 5,570,975.

REV. 0	03-31-2015	FINAL ISSUE	

STATE: PA
JOB NUMBER:
PROJECT: COMMONWEALTH OF PENNSYLVANIA, DEPARTMENT OF TRANSPORTATION, BUREAU OF PROJECT DELIVERY.
DESCRIPTION: METAL FOUNDATIONS FOR DYNAMIC MESSAGE SIGN STRUCTURES.

SHANER INDUSTRIES
930 GLENWOOD AVE.
AMBRIDGE, PA 15003
1-855-356-3825
T 724-266-1066
F 724-266-1006

CLIENT: PENNDOT
DRAWN BY: DL — SCALE: N.T.S.
CHECKED BY: CH
DATE: 10-18-2014
DRAWING NUMBER: 14-603-BDTD

TABLE 7: SINGLE SIGN DMS PANEL WITH WALK-IN ACCESS PLATFORM

METAL FOUNDATION DATA FOR SINGLE SIGN FRONT & BACK DMS PANEL WITH WALK-IN ACCESS PLATFORM - CENTER MOUNT - CASE 2 SOIL PARAMETERS (SITE SPECIFIC SOIL DATA)																							
DYNAMIC MESSAGE SIGNS			TOP PLATE			STUDS/BOLTS		PIPE DIMENSION				FIN DIMENSION						WEIGHT NON GALVANIZED	GROUND LOAD REACTIONS			
DESIGN HEIGHT	SIGN AREA	COLUMN SIZE	T	SIZE TYPE	YIELD KSI	QTY.	STUDS DIAMETER	DIAMETER & WALL	LENGTH	WELD PIPE-TOP PLATE	YIELD KSI	WIDTH & THICKNESS	LENGTH	WELD FIN-PIPE + REINFORCING		WELD FIN-TOP PLATE + REINFORCING		YIELD KSI	LBS	OVERTURNING MOMENT	TORSIONAL MOMENT	SHEAR	AXIAL
(FT)	(SF)	(IN)												R		R				KIP-FT	KIP-FT	KIPS	KIPS
16	200	20X0.375	2.00"	Y	36	8	Ø2.00"	20"Ø -0.375" WALL	18'- 6"	1/4"	35	10"- 0.50"	13'- 0"	CJP		CJP		36	2,418	155.74	31.98	8.76	7.43
	250	24X0.50	2.25"	Y	36	8	Ø2.25"	24"Ø -0.375" WALL	19'- 0"	1/4"	35	12" - 0.50"	14'- 0"	CJP	1/4"	CJP		36	3,403	192.15	46.54	10.86	9.56
	300	24X0.50	2.00"	Y	50	8	Ø2.25"	24"Ø -0.375" WALL	21'- 0"	1/4"	35	12" - 0.50"	17'- 6"	CJP	1/4"	CJP	1/4"	50	4,528	232.79	63.88	13.06	12.01
20	200	24X0.50	2.25"	Y	36	8	Ø2.25"	20"Ø -0.375" WALL	18'- 6"	1/4"	35	10" - 0.50"	13'- 0"	CJP		CJP		36	2,679	191.67	31.98	8.89	8.46
	250	24X0.50	2.25"	Y	36	8	Ø2.25"	24"Ø -0.375" WALL	19'- 0"	1/4"	35	12" - 0.50"	14'- 0"	CJP	1/4"	CJP		36	3,403	235.65	46.54	10.93	9.94
	300	24X0.50	2.00"	Y	50	8	Ø2.25"	24"Ø -0.375" WALL	21'- 0"	1/4"	35	12" - 0.50"	17'- 6"	CJP	1/4"	CJP	1/4"	50	4,528	285.12	63.88	13.15	12.39
24	200	24X0.50	2.25"	Y	36	8	Ø2.25"	20"Ø -0.375" WALL	18'- 6"	1/4"	35	10" - 0.50"	13'- 0"	CJP		CJP		36	2,679	227.38	31.98	8.97	8.84
	250	24X0.50	2.25"	Y	36	8	Ø2.25"	24"Ø -0.375" WALL	19'- 0"	1/4"	35	12" - 0.50"	14'- 0"	CJP	1/4"	CJP		36	3,403	279.5	46.54	11.01	10.32
	300	24X0.938	2.00"	X	50	16	Ø2.00"	24"Ø -0.375" WALL	21'- 0"	1/4"	35	12" - 0.50"	17'- 6"	CJP	1/4"	CJP	1/4"	50	4,528	337.78	63.88	13.22	14.86
28	200	24X0.50	2.25"	Y	36	8	Ø2.25"	24"Ø -0.375" WALL	19'- 0"	1/4"	35	12" - 0.50"	14'- 0"	CJP	1/4"	CJP		36	3,403	263.4	31.98	9.04	9.21
	250	24X0.938	2.25"	X	36	16	Ø2.00"	24"Ø -0.375" WALL	19'- 0"	1/4"	35	12" - 0.50"	14'- 0"	CJP	1/4"	CJP		36	3,403	323.65	46.54	11.08	13.11
	300	24X0.938	2.00"	X	50	16	Ø2.00"	24"Ø -0.375" WALL	21'- 0"	1/4"	35	12" - 0.50"	17'- 6"	CJP	1/4"	CJP	1/4"	50	4,528	390.77	63.88	13.3	15.56

TABLE 8: DOUBLE SIGN DMS PANELS WITH WALK-IN ACCESS PLATFORMS

METAL FOUNDATION DATA FOR DOUBLE SIGN DMS PANEL WITH WALK-IN ACCESS PLATFORM - CENTER MOUNT- CASE 2 SOIL PARAMETERS (SITE SPECIFIC SOIL DATA)																							
DYNAMIC MESSAGE SIGNS			TOP PLATE			STUDS/BOLTS		PIPE DIMENSION				FIN DIMENSION						WEIGHT NON GALVANIZED	GROUND LOAD REACTIONS			
DESIGN HEIGHT	SIGN AREA	COLUMN SIZE	T	SIZE TYPE	YIELD KSI	QTY.	STUDS DIAMETER	DIAMETER & WALL	LENGTH	WELD PIPE-TOP PLATE	YIELD KSI	WIDTH & THICKNESS	LENGTH	WELD FIN-PIPE + REINFORCING		WELD FIN-TOP PLATE + REINFORCING		YIELD KSI	LBS	OVERTURNING MOMENT	TORSIONAL MOMENT	SHEAR	AXIAL
(FT)	(SF)	(IN)												R		R				KIP-FT	KIP-FT	KIPS	KIPS
16	200	20X0.375	2.00"	Y	36	8	Ø2.00"	20"Ø -0.375" WALL	18'- 6"	1/4"	35	10"- 0.50"	13'- 0"	CJP		CJP		36	2,418	143.43	31.98	8.76	11.74
	250	24X0.50	2.25"	Y	36	8	Ø2.25"	24"Ø -0.375" WALL	19'- 0"	1/4"	35	12" - 0.50"	14'- 0"	CJP	1/4"	CJP		36	3,403	177.74	46.54	10.86	14.49
	300	24X0.50	2.00"	Y	50	8	Ø2.25"	24"Ø -0.375" WALL	21'- 0"	1/4"	35	12" - 0.50"	17'- 6"	CJP	1/4"	CJP	1/4"	50	4,528	214.73	63.88	13.06	17.88
20	200	24X0.50	2.25"	Y	36	8	Ø2.25"	20"Ø -0.375" WALL	18'- 6"	1/4"	35	10" - 0.50"	13'- 0"	CJP		CJP		36	2,679	179.14	31.98	8.89	12.77
	250	24X0.50	2.25"	Y	36	8	Ø2.25"	24"Ø -0.375" WALL	19'- 0"	1/4"	35	12" - 0.50"	14'- 0"	CJP	1/4"	CJP		36	3,403	221	46.54	10.93	14.87
	300	24X0.50	2.00"	Y	50	8	Ø2.25"	24"Ø -0.375" WALL	21'- 0"	1/4"	35	12" - 0.50"	17'- 6"	CJP	1/4"	CJP	1/4"	50	4,528	266.74	63.88	13.15	18.26
24	200	24X0.50	2.25"	Y	36	8	Ø2.25"	20"Ø -0.375" WALL	18'- 6"	1/4"	35	10" - 0.50"	13'- 0"	CJP		CJP		36	2,679	214.7	31.98	8.97	13.14
	250	24X0.50	2.25"	Y	36	8	Ø2.25"	24"Ø -0.375" WALL	19'- 0"	1/4"	35	12" - 0.50"	14'- 0"	CJP	1/4"	CJP		36	3,403	264.67	46.54	11.01	15.24
	300	24X0.938	2.00"	X	50	16	Ø2.00"	24"Ø -0.375" WALL	21'- 0"	1/4"	35	12" - 0.50"	17'- 6"	CJP	1/4"	CJP	1/4"	50	4,528	319.18	63.88	13.22	20.73
28	200	24X0.50	2.25"	Y	36	8	Ø2.25"	24"Ø -0.375" WALL	19'- 0"	1/4"	35	12" - 0.50"	14'- 0"	CJP	1/4"	CJP		36	3,403	250.62	31.98	9.04	13.52
	250	24X0.938	2.25"	X	36	16	Ø2.00"	24"Ø -0.375" WALL	19'- 0"	1/4"	35	12" - 0.50"	14'- 0"	CJP	1/4"	CJP		36	3,403	308.7	46.54	11.08	18.04
	300	24X0.938	2.00"	X	50	16	Ø2.00"	24"Ø -0.375" WALL	21'- 0"	1/4"	35	12" - 0.50"	17'- 6"	CJP	1/4"	CJP	1/4"	50	4,528	372.01	63.88	13.3	21.43

NOTES:

GENERAL:

1. THIS STANDARD IS APPLICABLE TO DMS STRUCTURES ONLY.

FABRICATION TOLERANCES:

1. UNLESS OTHERWISE SPECIFIED ALL FABRICATION TOLERANCES ARE:
   LINEAR TOLERANCES - 0"/±1/8"
   ANGULAR TOLERANCES - 0°/±1°.

INSTALLATION TOLERANCES & METHOD:

1. PLUMBNESS WITHIN 1.5" OVER FOUNDATION FULL LENGTH.
2. CENTER OF FOUNDATION WITHIN APPROXIMATELY 3" OF PLANNED LOCATION IN ALL DIRECTIONS.
3. FOUNDATION ORIENTATION WITHIN 7° OF DESIGN ORIENTATION UNLESS OTHERWISE PERMITTED BY ENGINEER.
4. FOUNDATION INSTALLED IN CONFORMITY WITH LINES, GRADES, ORIENTATIONS AND LOCATION SHOWN ON CONTRACT DRAWINGS.
5. PRE-DRILLING MAY BE REQUIRED. SHANER INDUSTRIES RESERVE THE RIGHT TO SELECT THE PREFERRED METHOD OF INSTALLATION FOR EACH SITE AND FOUNDATION TYPE.

MATERIAL NOTES: (PROVIDE MILL CERTS ON ALL MATERIALS)

1. PIPE — ASTM A53 - GR B, 35 KSI.
2. FINS — ASTM A36 - GR 36 & ASTM A572 - GR 50.
3. PLATE — ASTM A36 - GR 36 & ASTM A572 - GR 50.
4. FABRICATION — FABRICATE IN ACCORDANCE WITH AASHTO AWS DI.IM/DI.1-2008 AND PUBLICATION 408, SECTION 1105. FABRICATE IN A BULLETIN 15 APPROVED SHOP HAVING SBR CERTIFICATION.
5. FINISH — H.D. GALVANIZED TO ASTM A123.

FOUNDATION HARDWARE:

1. STUDS — 24" L., ASTM A193 GR. B7 - 105 KSI MIN..
2. NUTS — ASTM A194 GR. 2H.
3. WASHERS — ASTM F436.
4. FINISH — H.D. GALVANIZED TO ASTM A153.

METAL FOUNDATIONS - ALL RIGHTS OF THIS TECHNOLOGY AND DESIGN ARE PROPERTY OF SHANER INDUSTRIES. UNAUTHORIZED USE OF THIS CONTENT WITHOUT EXPRESS WRITTEN PERMISSION IS SUBJECT TO LEGAL ACTION AND WILL BE PURSUED TO THE FULLEST EXTENT.

COMMONWEALTH OF PENNSYLVANIA
REGISTERED PROFESSIONAL
JASON R. TRUCKENBROD
ENGINEER
No. 077847

APR. 2, 2015

4/28/2015

THIS DRAWING IS THE PROPERTY OF "SHANER INDUSTRIES", IT IS MADE FOR EXCLUSIVE USE OF "SHANER INDUSTRIES". NEITHER THE DRAWING OR REPRODUCTION OF IT NOR INFORMATION DERIVED FROM IT IS TO BE GIVEN TO OTHERS WITHOUT THE EXPRESSED CONSENT OF "SHANER INDUSTRIES". NO USE IS TO BE MADE OF IT WHICH IS OR MAY BE IN ANY WAY INJURIOUS TO AND/OR CONTRARY TO THE INTERESTS OF "SHANER INDUSTRIES". "SHANER INDUSTRIES" MAKES NO REPRESENTATIONS OR WARRANTIES AS TO ANY USE OF THIS DRAWING OTHER THAN THAT OF WHICH "SHANER INDUSTRIES" ORIGINALLY INTENDED. THIS FOUNDATION TYPE IS COVERED UNDER U.S. PATENT No 5,570,975.

REV. 0	03-31-2015	FINAL ISSUE	

STATE: PA
JOB NUMBER:
PROJECT: COMMONWEALTH OF PENNSYLVANIA, DEPARTMENT OF TRANSPORTATION, BUREAU OF PROJECT DELIVERY.
DESCRIPTION: METAL FOUNDATIONS FOR DYNAMIC MESSAGE SIGN STRUCTURES.

SHANER INDUSTRIES
930 GLENWOOD AVE.
AMBRIDGE, PA 15003
1-855-356-3825
T 724-266-1066
F 724-266-1006

CLIENT: PENNDOT
DRAWN BY: DL — SCALE: N.T.S.
CHECKED BY: CH
DATE: 10-18-2014
DRAWING NUMBER: 14-603-BDTD

Product:

Item 9000-7010 - Metal Foundations for High Mast Lighting Pole
Shaner Industries
PennDOT Drawing #95-291 PE, Rev. 2

Approval Date:	**Initiated By SOL:**
March 7, 2016	483-16-01

Application/Use:

Metal Foundations for High Mast Lighting Pole manufactured by Shaner Industries of Ambridge, PA have been approved to be used as an "alternate" to drilled concrete caissons as specified on the attached standard drawing. The use as an "Alternate" or drilled concrete caissons or spread footings is at the discretion of the District Executive.

The usage of Metal Foundations for High Mast Lighting Pole has the following restriction:

- Maximum Pole Height: 120 feet

This foundation meets both AASHTO and Design Manual, Part 4 design criteria.

Specifications:

Design/Material/Construction Specifications for this foundation are specified on PennDOT Drawing #95-291 PE, Rev. 2 dated March 7, 2016 of Metal Foundations for High Mast Lighting Poles for your use.

Comment:

On those projects permitting the use of this metal foundation as an alternate, a special provision should be included in the proposal to indicate that the "Metal Foundations for High Mast Lighting Pole" as an alternate is allowed.

The contractor will be required to revise the pertinent contract drawings as per DM-4M, PP 1.10 to show the usage of "Metal Foundations for High Mast Lighting Pole" and will also be required to reimburse the Department a fee of $1000 per design for the review and approval of the revision. This should be specified in the contract's Special Provision.

FHWA approval has been secured for Metal Foundations for High Mast Lighting Pole.

This product under the "Metal Foundations, LLC" name was previously approved by the Department on June 22, 2009.

This product under the "SAFE Foundations" name was initially approved by the Department on June 22, 1999.

SHANER INDUSTRIES, LLC
METAL FOUNDATIONS
DESIGN SPECIFICATIONS.

1. General:

A. PENNDOT drawing 95-291-PE sheets 1 and 2, provide the design, fabrication and installation criteria for use of standard-sized Metal Foundations (MF) as alternates to the standard-sized concrete foundations shown on PENNDOT Drawing RC-80M, Sheets 2 of 2, for support of High Mast Lighting Poles.

B. Shaner Industries, takes full responsibility for engineering theory and calculations correctness and ensuring documents either by needed details or construction specifications.

2. Design:

A. The design assumptions and calculations for the standard-sized foundations shown on Sheet 2 of PADOT Drawing #95-291 PE are presented in the GAI Report dated May 13, 1999 for Product Evaluation PE # 95-291, GAI Project 93-503-51.

B. The calculations demonstrate that the Shaner MF foundations have the same structural capacity to resist loads imposed by high mast light poles as the concrete foundations they replace to the limits indicated on Sheet 2 of Drawing #95-291 PE.

C. Changes to the design can not be made unless Shaner Industries designs the changes and the Chief Bridge Engineer approves the changes.

D. The drilled caisson foundation details shown on Sheet 2 of Drawing RC-80M define the foundation sizing except for the depth, which must be designed for each installation. The same is true for the Shaner MF foundation shown on Sheet 2 of Drawing 95-291 PE. In both cases, the depth must be determined according to the procedures for drilled caisson foundations defined in the PennDOT Design Manual. The Shaner MF foundation parameters necessary to perform the required analysis using the COM624P computer code or similar approved program, are presented on Sheet 2 of Drawing # 95-291 PE.

E. If the depth of the MF foundations have not been provided on the project Drawings by the project designer, then provide calculations in accordance with the procedures in the PennDOT Design Manual to define the depth of each Shaner MF foundation to be used for the specific High Mast light pole at the specific location defined on the project Drawings. The calculations shall be prepared under the direction of a professional civil engineer registered in the state of Pennsylvania and shall bear his seal, signature, and date under the certification "I certify that all assumptions made in designing the depths of these MF foundations have been validated either through construction details or special notes and instructions to the fabricator, and contractor".

3. Use Guidelines:

A. The use of MF foundations should consider any site conditions that could effect these foundations including but not limited to obstructions, voids, rock interference, and buried conduits or pipelines having cathodic protections.

B. Obtain the approval of the Distric Bridge and Geotechnical Engineers before incorporating the Shaner Foundations into a project.

SHANER INDUSTRIES, LLC.
METAL FOUNDATIONS
CONSTRUCTION SPECIFICATIONS.

1. Description:

This work includes the furnishing, constructing and installing of galvanized metal foundations.

2. Materials:

A. General- Provide materials and workmanship in accordance with the effective Pennsylvania Department of Transportation Specifications, Publication 408 Section (948, 1105 and special conditions) as specified in the contract documents and on the construction drawings.

Pipe - Section 1105.02 (a) 2.a, A500 (Grade B).
Plate - Section 1105.02(a) 2 & (A) 3.C, ASTM A709 or ASTM A572 (Grade 50).
Bolts, Nuts and Washers - Section 1105.02(d) or ASTM A193 (Gr. B7),
ASTM A194 (Gr. 2H), ASTM F436. Galvanized and as required by pole manufacturer.
Galvanizing - Section 1105.02(s), ASTM A123 AND ASTM A153.
Welding Materials - Section 1105.03(m), except use effective ANSI/AWS D1.1 for tubular sections.

B. Certifications - Section 106.03(b)3.

3. Fabrication:
Section 1105.03, ASTM and effective ANSI/AWS D1.1 as applicable. Fabricate the foundations to the minimum material thickness and dimensions shown on the drawings. Angles of welded structural connections shall be correct to within plus or minus 1 degree. Fabrication, finishing and bolt holes in accordance with Sections 1101 and 1105. Bolt holes shall be factory installed unless otherwise permitted by the Engineer.

4. Construction:

As shown on the standard drawings, approved by the Department and as follows:

A. General - Install the foundation in conformity with the lines, grades, fin orientations, dimensions and locations as shown on the approved drawings according to the contract documents.

Unless otherwise indicated, install the foundations in accordance with Section 1006.3(a) to within a plumbness tolerance equal to 2 percent of the foundation length and within 3 inch of the planned locations. Orient the foundations so that the anchor bolts and fins are within 2 degrees of their planned orientation, unless otherwise permitted by the Engineer. Install anchor bolts using a template equivalent to the base plate of the planned structure so that the center of the completed anchor bolt pattern is within 0.25 inches of the center of the top plate of the foundation. Install anchor bolt pattern to within 2 degrees of planned orientation, unless otherwise permitted by the Engineer.

Any damage to the galvanizing during handling or delivery or bolt hole drilling should be repaired in accordance with Section 1105.02(e).

B. Installation.

Anchor Method (B.1):
Drill a vertical hole, plumb and in the location of the required installed foundation as shown on the construction drawings. The diameter of the completed auger hole shall be no greater than the outside diameter of the required foundation pipe column. Field verify that the completed hole diameter is not larger than the outside diameter of the pipe column. Auger the hole a minimum of two feet deeper than the depth of the bottom of the installed foundation. Record the soil type and classification on the installation report. Install foundation immediately after auger hole is completed.
If rock or obstructions are encountered above the design tip elevation of the foundation, contact the Engineer. If necessary, install the foundation at an alternative location acceptable to the Engineer or replace it with a conventional concrete foundation at the original location, as directed by the Engineer at no additional cost to the Department. Modification of the foundation to accommodate obstructions will not be permitted.
Contact the Engineer if soil conditions are different from those used for the foundation design or if the pre-augered hole collapses. If the pre-augered hole collapses, that location is rejected.
Lower the installing anchor into the hole and place a centering collar in the hole, around the anchor. Place hydraulic cylinders over the anchor rod, on top of the anchor housing and lock into place with the high strength nut. Expand the hydraulic cylinders to the maximum required rod extension or hydraulic pressure for the installation anchor in use. Secure the anchor lock nut against the anchor housing. Remove the hydraulic cylinders and the centering collar. Record the anchor length, installation pressure and rod extension on the installation log.
Extend the high strength anchor rod to accommodate the total length of the foundation and the hydraulic cylinders. Lift the foundation into position over the installation anchor. Foundation fin orientation must conform to the construction drawings. Position hydraulics on top of the foundation, attach to the anchor rod and lock into position with the high strength nut. Check and adjust orientation, alignment, plumbness and level of the foundation before the first stroke of the cylinders.
Expand the hydraulic cylinders in order to push the foundation into the earth. This may require several strokes of the cylinders to reach the proper elevation. Record the foundation installing forces on the installation report for each one foot of depth below the ground surface.
Release the anchor lock nut, remove the hydraulics and drop the anchor expanding cone below the anchor plates. Withdraw the installing anchor through the foundation column. The soils removed during the auger/drilling operations are then backfilled into the core of the metal foundation to a compacted condition acceptable to the representative. Incorporate installation of conduit and grounding connections, as appropriate.
The structure may be bolted to the foundation immediately after the foundation is installed, back-filled and approved by the inspector. Use the bolts or studs, washers, lock washers and nuts as specified and/or shown on the approved contract drawings.
When additional anchors are required to install the foundation, install the satellite anchors no closer than eight satellite hole diameters from the center of the foundation in the manner as the main anchor. Attach the anchors to spreader beams positioned above the hydraulic cylinders. Expand the cylinders against the beam that employ the resistance of the multiple anchors to install the foundation.
Remove the satellite anchors. Backfill and compact the satellite anchors holes using the material that was removed during the drilling operations. Tamp the back-fill in 4-inch lift to a stable condition equal to or greater than the density of the soil before the excavation.
Observe the installation of the foundation during the entire installation process. If obstructions are encountered that displace the foundation laterally or alter its vertical alignment from that of the predrilled hole, remove and inspect the foundation for damage. If the foundation is not damaged, either reinstall at an alternative location acceptable to the Engineer or replace it with a conventional concrete foundation at the original location, if directed by the Engineer. Field modifications of foundations are not permitted.

Vibratory Method (B.2):
a) Equipment:
The size of the hydraulic vibratory hammer to be used for the installation of the metal foundation system is dependent on the design parameters of the metal foundation as well as the geotechnical soils condition of the intended project site. Normally the driving force of the hydraulic vibratory hammer during installation of the metal foundations is between 45 tons to 65 tons; occasionally hydraulic vibratory hammers with a driving force up to 100 tons are utilized.
The type of hydraulic vibratory hammer used for the installation of the metal foundation system will depend on the type of equipment that the hydraulic vibratory hammer will be attached to during installation such as ABI Mobilram MultiPurpose Machines, Excavators with built-in hydraulic capacity as well as self propelled hydraulic cranes in the 40 ton to 70 ton range. The Metal Foundation Adapter (MFA) is utilized to attach the metal foundation to the hydraulic vibratory hammer for proper installation. The MFA is engineered and designed for the specific project metal foundation(s) to be installed and is furnished with the metal foundation(s).

b) Predrilling of Soils:
Predrilling of the soils may be required depending on site specific data from the geotechnical report or if load testing of the metal foundation is specified. Predrilling may also be utilized to reduce the tonnage size of the hydraulic vibratory hammer to accommodate certain types of equipment based on jobsite conditions. Any soil spoils produced from the drilling operations will be placed back into the core of the metal foundation and will not require the soils to be hauled away.
c) Installation:
The MFA described above is bolted to the metal foundation which then enables the hydraulic vibratory hammer to be connected to the MFA to lift the metal foundation into position for the installation. This method of connection enables the metal foundation to be oriented, aligned and plumbed before activating the hydraulic vibratory hammer to begin the installation of the metal foundation. During the installation process the vibratory system is interrupted periodically to monitor vertical alignment and orientation. The installation of the metal foundation is considered complete once the metal foundation has reached the design depth below grade; the MFA is then removed from the metal foundation and prepared to be mounted to another metal foundation for installation.

Testing procedures (B.3):
This testing procedure is to apply only and exclusively to the Metal Foundations vibratory method of installation described in paragraph (B.2). Upon installation of the new metal foundations, a compression load test will be performed to verify the design axial capacity of the Metal Foundation in accordance with PENNDOT Publication 408, Section 1005.3 (g) 1.
The foundation will be subject to a compression force up to its axial design load, held for thirty (30) minutes and verified that no settlement is recorded, the compressive force will then be increased up to 125% of the design axial load, held for thirty (30) minutes and verified that no more than 0.25 inches of penetration is recorded. Any value exceeding the allowables will be considered test failure. The equipment used to perform the test will conform to the description in paragraph (B.1).
For projects with multiple foundations at the same site, the first two (2) installed foundations need to be tested in accordance with the above procedures to verify the actual foundation capacity prior to installing the subsequent foundations. If either test is considered failure, use anchor method (B1) to install the remaining foundations. For single foundation project, the compression load test is always required to verify the actual foundation capacity. If the test is considered failure, Item 2) of Section B.4 shall apply.
<u>Single anchor system procedure:</u>
A hole of a depth minimum two feet deeper than the installed foundation will be drilled inside the foundation core pipe.
The anchor/rod/centering collar is lowered into the augered/drilled opening with a crane, the hydraulic cylinders are then placed over the foundation top plate and locked into place with the high strength nut. The hydraulic cylinders are then expanded to engage the anchor and apply the compressive force at the top of the foundation. Previously installed dial gauge system will monitor the compressive force applied to the foundation and the vertical movement recorded at the various stages of the test. All the equipment will be removed at test completion and any soil augered during the drilling operations will be placed inside the hole.
Depending on the soil type and axial design loads, a <u>double anchor satellite system</u> could be used to perform the required test; in this case two satellite holes will be auger/drilled at a safe distance (approximately 3 times the foundation diameter) from the installed foundation, the anchor/rod/centering collar is lowered into the augered/drilled opening with a crane, the hydraulic cylinders are then placed over the anchor rod and locked into place with the high strength nut. The hydraulic cylinders are then expanded to the maximum required rod extension or hydraulic pressure for the anchor being used for the testing.The hydraulic cylinders are then removed from the satellite anchors and placed over the foundation top plate. A cross beam will then be placed over them and secured to the anchor rods with high strength nuts. The hydraulic cylinders are then expanded to obtain the required test compressive force and settlements recorded at each stage.
General (B.4):
1) Immediately after the metal foundation is installed and approved by the project inspector, the structures to be supported may be attached to the metal foundation. Use the anchor stud assemblies as specified and/or shown on the approved metal foundation project drawings.
2) If rock is found to be present after the metal foundation is fabricated and delivered to the project site, it shall be determined from field verification the depth that the rock layer is encountered below finished grade and the depth at which the rock layer ends below finished grade. The metal foundation for those locations will be:
a) The location of the metal foundation, with approval from the Engineer, will be relocated as directed by the Department to avoid the rock layer.
b) Replace the proposed metal foundation with a conventional concrete foundation at the original location, as directed by the Engineer at no additional cost to the department.
c) Modification of the metal foundation or supported structure to accommodate obstructions or mis-installation will not be permitted.

C. Reports - An installation report supplied by the manufacturer must be completed and submitted to the Department for each installation. The report must be completed and signed by the installer and signed by a Department Inspector and shall include the visual classifications of the soils encountered, identification number of the foundation, the installer's name and company, the location of the installation, the date of the installation, the foundation size, the calibration dates of the equipment, the installation forces required at measured depths, and any problem encountered and their resolution.

D. Rejection of Units - Units that are damaged or do not conform to the above specifications may be rejected. Replace or repair rejected units at no additional costs in a manner acceptable to the Engineer. Attempting to pull up the over-pushed or over-vibrated metal foundation to match the proposed foundation elevation will not be permitted and the unit may be rejected.

E. Technical Assistance - In the event of unusual problems or special circumstances, provide a qualified designer/installer of metal foundations at the project site to assist the Contractor and Engineer.

SHEET 1 OF 2

3/7/2016
Rev. 1 Approval on 6/22/2009
Initial Approval on 6/22/1999

PENNSYLVANIA
DEPARTMENT OF TRANSPORTATION
RECOMMENDED
Thomas P Macioce
CHIEF BRIDGE ENGINEER

COMMONWEALTH OF PENNSYLVANIA
REGISTERED PROFESSIONAL
JASON R. TRUCKENBROD
ENGINEER
8-18-15

METAL FOUNDATIONS - ALL RIGHTS OF THIS TECHNOLOGY AND DESIGN ARE PROPERTY OF SHANER INDUSTRIES.
UNAUTHORIZED USE OF THIS CONTENT WITHOUT EXPRESS WRITTEN PERMISSION IS SUBJECT TO LEGAL ACTION AND WILL BE PURSUED TO THE FULLEST EXTENT.

REV. 2 CHANGED Metal Foundations, LLC to Shaner Industries, LLC.

THIS DRAWING IS THE PROPERTY OF "SHANER INDUSTRIES", IT IS MADE FOR EXCLUSIVE USE OF "SHANER INDUSTRIES". NEITHER THE DRAWING OR REPRODUCTION OF IT NOR INFORMATION DERIVED FROM IT IS TO BE GIVEN TO OTHERS WITHOUT THE EXPRESSED CONSENT OF "SHANER INDUSTRIES". NO USE IS TO BE MADE OF IT WHICH IS OR MAY BE IN ANY WAY INJURIOUS TO AND/OR CONTRARY TO THE INTERESTS OF "SHANER INDUSTRIES". "SHANER INDUSTRIES" MAKES NO REPRESENTATIONS OR WARRANTIES AS TO ANY USE OF THIS DRAWING OTHER THAN THAT OF WHICH "SHANER INDUSTRIES" ORIGINALLY INTENDED. THIS FOUNDATION TYPE IS COVERED UNDER U.S. PATENT No 5,570,975.

Rev. 2	08-06-2015	FINAL ISSUE.	

STATE: PA
JOB NUMBER:
PROJECT: COMMONWEALTH OF PENNSYLVANIA, DEPARTMENT OF TRANSPORTATION, BUREAU OF PROJECT DELIVERY.
DESCRIPTION: METAL FOUNDATIONS FOR HIGH MAST LIGHTING POLE.

SHANER INDUSTRIES
260 PULLMAN SQUARE #169.
BUTLER, PA 16001
T 724-266-1066

CLIENT:	
DRAWN BY: DL	SCALE: N.T.S.
CHECKED BY: JS	
DATE: 5-26-2015	
DRAWING NUMBER: 95-291 PE,Rev. 2	

METAL FOUNDATION DATA FOR HIGH MAST LIGHTING POLES - HIGHWAY LIGHTING FOUNDATIONS - SELECTION TABLE																		
HIGH MAST LIGHTING POLE	TOP PLATE			STUDS/BOLTS			PIPE DIMENSION				FIN DIMENSION						GROUND LOAD REACTIONS	
POLE HEIGHTS	T	DIAMETER	YIELD KSI	QTY.	STUDS DIAMETER	BOLT CIRCLE DIAMETER	DIAMETER & WALL	LENGTH "H"	WELD PIPE-TOP PLATE	YIELD KSI	WIDTH & THICKNESS	LENGTH	WELD FIN-PIPE + REINFORCING		WELD FIN-TOP PLATE + REINFORCING		YIELD KSI	OVERTURNING MOMENT	SHEAR
(FT)						MAXIMUM							R		R			KIP-FT	KIPS
60'	1.5"	32"Ø	50	6	Ø1.50"	Ø26"	16"Ø -0.375" WALL	TBD (MIN 150 IN)	1/4"	42	14" -0.50"	TBD	CJP		CJP		50	185	3.0
70'	1.5"	32"Ø	50	8	Ø1.50"	Ø26"	16"Ø -0.375" WALL	TBD (MIN 150 IN)	1/4"	42	14" -0.50"	TBD	CJP		CJP		50	185	3.0
80'	1.5"	32"Ø	50	8	Ø1.50"	Ø26"	16"Ø -0.375" WALL	TBD (MIN 150 IN)	1/4"	42	14" -0.50"	TBD	CJP		CJP		50	185	3.0
90'	1.5"	32"Ø	50	8	Ø1.50"	Ø26"	16"Ø -0.375" WALL	TBD (MIN 150 IN)	1/4"	42	14" -0.50"	TBD	CJP		CJP		50	185	3.0
100'	2.00"	38"Ø	50	10	Ø1.50"	Ø30"	16"Ø -0.50" WALL	TBD (MIN 186 IN)	3/8"	42	18" - 0.625"	TBD	CJP		CJP		50	355	4.6
110'	2.00"	38"Ø	50	10	Ø1.50"	Ø30"	16"Ø -0.50" WALL	TBD (MIN 186 IN)	3/8"	42	18" - 0.625"	TBD	CJP		CJP		50	355	4.6
120'	2.00"	38"Ø	50	12	Ø1.75"	Ø30"	16"Ø -0.50" WALL	TBD (MIN 186 IN)	3/8"	42	18" - 0.625"	TBD	CJP		CJP		50	355	4.6

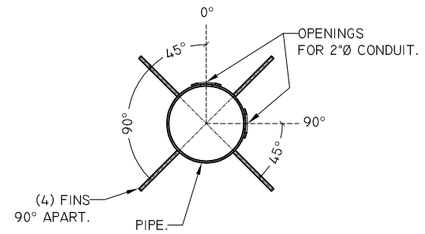

6 SECTION "A"
(TYP)

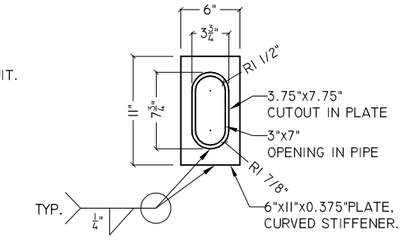

7 OPENING DETAIL
(Ø2" CONDUIT)
QTY. 2, 90° APART
NTS

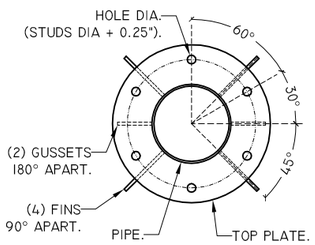

2 TOP PLATE
(6 BOLT PATTERN)

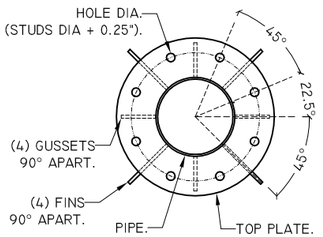

3 TOP PLATE
(8 BOLT PATTERN)

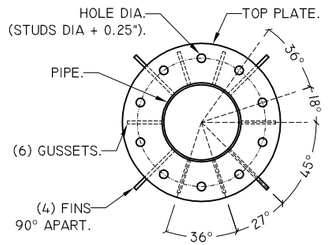

4 TOP PLATE
(10 BOLT PATTERN)

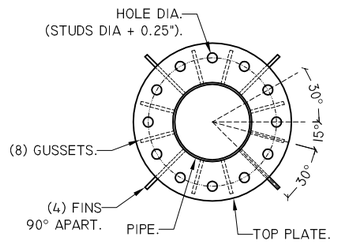

5 TOP PLATE
(12 BOLT PATTERN)

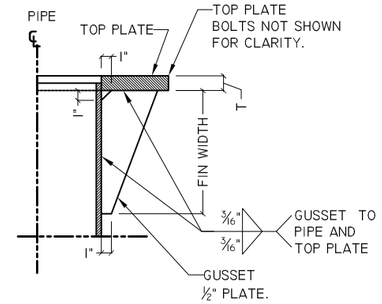

8 DETAIL 2
(GUSSET WELDS)

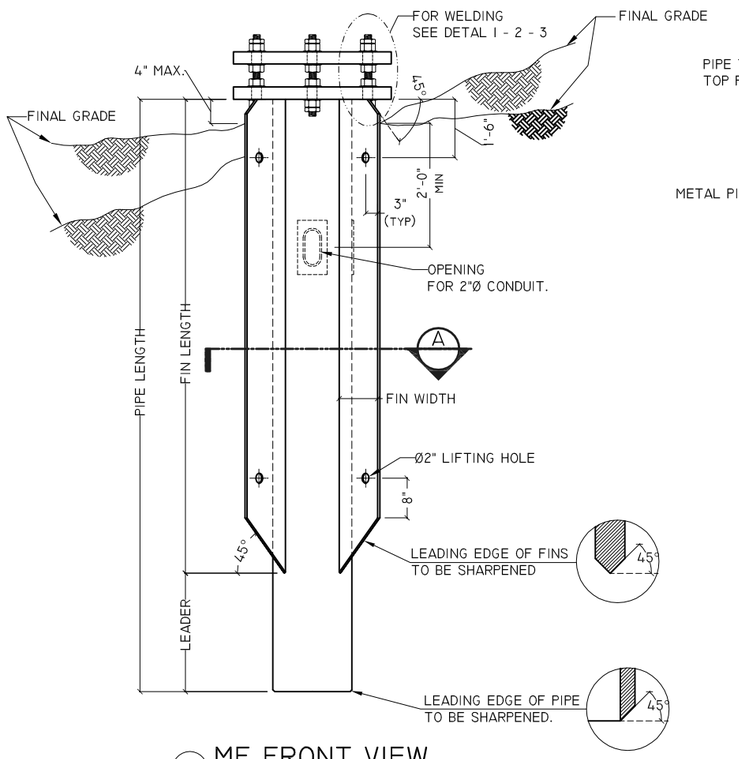

1 MF FRONT VIEW

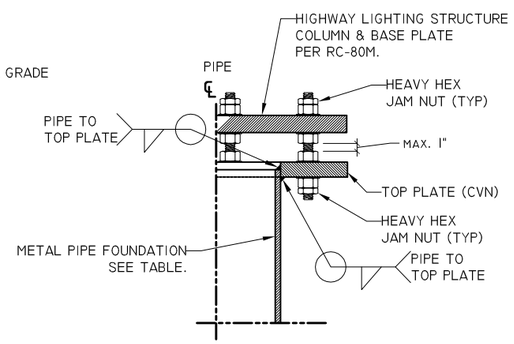

10 DETAIL 1
(TOP PLATE WELDS)

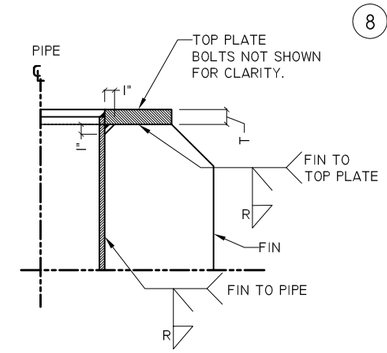

9 DETAIL 3
(FIN WELDS)

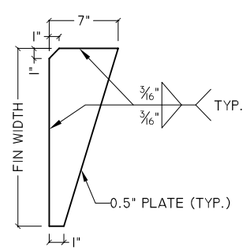

11 GUSSETS DETAIL

NOTES:

GENERAL:

1. THIS STANDARD IS APPLICABLE TO HIGH MAST LIGHTING STRUCTURES ONLY.
2. SEE SHEET 1 OF PADOT DRAWING #95-291PE FOR DESIGN SPECIFICATIONS. THE LENGTH OF THE FOUNDATION (H) SHALL BE DETERMINED USING THE SAME PROCEDURES USED FOR DRILLED CAISSON FOUNDATIONS IN THE PENNDOT DESIGN MANUAL APPLICABLE FOR HIGH MAST LIGHTING POLE FOUNDATIONS. THE FOLLOWING STRUCTURAL PARAMETERS APPLY TO THIS FOUNDATION SIZE AND MAY BE USED AS INPUT VALUES FOR COM624 PROGRAM ANALYSIS TO DETERMINE ACCEPTABLE LENGTHS OF FOUNDATIONS BASED ON SITE SOIL CONDITIONS:
   FOUNDATION MODULUS OF ELASTICITY = 29,000,000 PSI
   FOUNDATION EFFECTIVE DIAMETER = 31.11" (60' TO 90' POLE), 36.77" (100' TO 120' POLE)
   FOUNDATION MOMENT OF INERTIA = 3941 IN^4 (60' TO 90' POLE), 7843 IN^4 (100' TO 120' POLE)
   FOUNDATION AREA = 46.41 IN^2 (60' TO 90' POLE), 69.35 IN^2 (100' TO 120' POLE)
   FOR SOIL STRENGTH LESS THAN OR EQUAL TO 40 DEGREES.
3. PROVIDE MATERIALS AND WORKMANSHIP IN ACCORDANCE WITH SPECIFICATIONS PUB. 408 WITH INTERIM REVISIONS ANSI/AASHTO/AWS D 1.5-2002 AND D 1.1 BRIDGE WELDING CODE AND CONTRACT SPECIAL PROVISIONS.
4. ALL STRUCTURAL STEEL MATERIAL AND FABRICATION SHALL COMPLY WITH PUB. 408, SECTION 1105, "FABRICATED STRUCTURAL STEEL", AND WITH SECTION 1101, "HIGHWAY LIGHTING".
5. ENTER FOUNDATION SELECTION TABLE WITH REQUIRED POLE HEIGHT AND FIND APPROPRIATE FOUNDATION VALUES AS SHOWN IN DETAILS.
6. PIPE, ASTM A500, GRADE B.
7. FINS, GUSSETS AND TOP PLATE ASTM A-572 STEEL.
8. CERTIFICATION AS SPECIFIED IN 106.03 (B) 3. OF PUBLICATION 408. FURNISH A COPY OF THE RESULTS OF ALL TESTS PERFORMED WHICH ARE NECESSARY TO ASSURE COMPLIANCE WITH THE SPECIFICATIONS.
9. FOUNDATIONS TO BE GALVANIZED PER ASTM A-123 AFTER COMPLETE WELDED ASSEMBLY.
10. WELDING IN ACCORDANCE WITH ANSI/AASHTO/AWS D 1.5-2002 AND D 1.1 AND SECTION 1105-03(M) OF PUBLICATION 408 USING E-60XX WELDING ELECTRODES OR BETTER.
11. INSTALL IN ACCORDANCE WITH THE SPECIFICATIONS ON PADOT DRAWING #95-291 PE SHEET 1 OF 2, NO FIELD MODIFICATIONS OF FOUNDATIONS ARE PERMITTED.
12. BOLT HOLES FACTORY INSTALLED PRIOR TO GALVANIZING FOUNDATION. DRILL HOLES THRU TOP PLATE, SIZE, QUANTITY AND PATTERN AS REQUIRED FOR PARTICULAR LIGHT POLE ANCHOR BOLTS. GUSSETS ARE REQUIRED. PROVIDE HOT DIPPED GALVANIZED BOLTS, NUTS, AND WASHERS AS REQUIRED BY THE POLE MANUFACTURER FOR THIS TYPE OF FOUNDATION CONNECTION. TACK WELD NUTS.
13. SEE DRAWING RC-80M, SHEET 1 AND 2 FOR GENERAL NOTES, CONDUIT AND GROUNDING DETAILS, DELETE GROUNDING CONNECTIONS WHEN TESTING VERIFIES THAT SUPPLEMENTAL GROUNDING IS NOT REQUIRED.
14. INSTALLATION TOLERANCES:
   - PLUMBNESS WITHIN 2% OF FOUNDATION LENGTH.
   - CENTER OF ANCHOR BOLT PATTERN WITHIN ¼" OF CENTER OF FOUNDATION.
   - CENTER OF FOUNDATION WITHIN 3 INCHES OF PLANNED LOCATION UNLESS OTHERWISE PERMITTED BY THE ENGINEER.
   - FOUNDATION INSTALLED IN CONFORMITY WITH LINES, GRADES, FIN ORIENTATIONS, DIMENSIONS, AND LOCATIONS SHOWN ON CONTRACT DRAWINGS.

MATERIAL NOTES: (PROVIDE MILL CERTS ON ALL MATERIALS)

1.	PIPE	ASTM A500 - GR B, 42 KSI MIN.
2.	FINS	ASTM A572 - GR 50.
3.	PLATE	ASTM A572 - GR 50.
4.	FABRICATION	FABRICATE IN ACCORDANCE WITH AASHTO AWS D1.1M/D1.1-2008 AND PUBLICATION 408, SECTION 1105. FABRICATE IN A BULLETIN 15 APPROVED SHOP HAVING SBR CERTIFICATION.
5.	FINISH	H.D. GALVANIZED TO ASTM A123.

FOUNDATION HARDWARE:

1.	STUDS	18" L., ASTM A193 GR. B7 - 105 KSI MIN..
2.	NUTS	ASTM A194 GR. 2H.
3.	WASHERS	ASTM F436.
4.	FINISH	H.D. GALVANIZED TO ASTM A153.

METAL FOUNDATIONS - ALL RIGHTS OF THIS TECHNOLOGY AND DESIGN ARE PROPERTY OF SHANER INDUSTRIES. UNAUTHORIZED USE OF THIS CONTENT WITHOUT EXPRESS WRITTEN PERMISSION IS SUBJECT TO LEGAL ACTION AND WILL BE PURSUED TO THE FULLEST EXTENT.

THIS DRAWING IS THE PROPERTY OF "SHANER INDUSTRIES". IT IS MADE FOR EXCLUSIVE USE OF "SHANER INDUSTRIES". NEITHER THE DRAWING OR REPRODUCTION OF IT NOR INFORMATION DERIVED FROM IT IS TO BE GIVEN TO OTHERS WITHOUT THE EXPRESSED CONSENT OF "SHANER INDUSTRIES". NO USE IS TO BE MADE OF IT WHICH IS OR MAY BE IN ANY WAY INJURIOUS TO AND/OR CONTRARY TO THE INTERESTS OF "SHANER INDUSTRIES". "SHANER INDUSTRIES" MAKES NO REPRESENTATIONS OR WARRANTIES AS TO ANY USE OF THIS DRAWING OTHER THAN THAT OF WHICH "SHANER INDUSTRIES" ORIGINALLY INTENDED. THIS FOUNDATION TYPE IS COVERED UNDER U.S. PATENT No 5,570,975.

Rev. 2	08-06-2015	FINAL ISSUE.	

STATE: PA
JOB NUMBER:
PROJECT: COMMONWEALTH OF PENNSYLVANIA, DEPARTMENT OF TRANSPORTATION, BUREAU OF PROJECT DELIVERY.
DESCRIPTION: METAL FOUNDATIONS FOR HIGH MAST LIGHTING POLE.

COMMONWEALTH OF PENNSYLVANIA
REGISTERED PROFESSIONAL
JASON R. TRUCKENBROD
ENGINEER
8-18-15

3/7/2016

SHANER INDUSTRIES
260 PULLMAN SQUARE #169.
BUTLER, PA 16001
T 724-266-1066

CLIENT: PENNDOT	
DRAWN BY: DL	SCALE: N.T.S.
CHECKED BY: JS	
DATE: 5-26-2015	
DRAWING NUMBER: 95-291 PE,Rev. 2	

Product:
Spliced Post-Tensioned Concrete U-Girder Standards
Central Atlantic Bridge Associates (CABA)
PennDOT Drawing # 15-601-BDTD

Approval Date:	**Initiated By SOL:**
May 31, 2016	483-16-04

Application/Use:

Spliced Post-Tensioned Concrete U-Girder Standards developed by Central Atlantic Bridge Associates has been approved for use as Design Build Projects or as an Alternate Bridge Type at the discretion of the District Executive. This bridge type should not be included as the "As-Designed" Bridge without approval of the Chief Bridge Engineer.

- Minimum and Maximum length of a Continuous Unit: 250' – 1200'
- Minimum and Maximum end span length: 75' – 250'
- Minimum and Maximum inner span length: 100'-300'
- Maximum Beam Depth: 8 ft for constant depth girders and 11 ft for haunched girder
- Minimum pier beam length: 40' -120' (max)
- Maximum pier beam depth: 11 ft.
- Maximum beam segment weight: 175 tons
- Maximum single tendon length: 1200'
- Minimum skew angle: 30°
- Bridges with a central angle less than 12° within all spans can be analyzed as a straight girder and torsion can be ignored. Bridges with a degree of curvature between 12° and 34° in any span require a curved girder line model. Bridges with a curvature greater than 34° in any span require a refined 3 dimensional analysis.
- Minimum Radius: 750', although tighter radii have been successfully used.
- Structure configuration: simple span or full continuity for deck dead load, superimposed dead loads, and live load. Structures may also be straight or horizontally curved.
- Minimum Beam Spacing: 12'
- Maximum Beam Spacing: 26'

The Spliced Post-Tensioned Concrete U-Girders are to be designed/analyzed to meet AASHTO, Design Manual, Part 4 criteria, and these standards provided details, erection alternates and grouting specifications. A Load Rating Table and Rating Procedure must be incorporated on the Contract Drawings based on both the actual post-tensioned tendon configuration and an equivalent number of single strand configuration. Contact the Bridge Design & Technology Division (BDTD) for design and/or analysis questions.

As part of the construction contract, a special provision is to be included requiring the contractor to use a design engineer as well as an independent peer review engineer. The independent peer review engineer is to ensure the final moments, shears and deflections are accurate. In addition, the erection method, creep and shrinkage analysis and re-decking analysis need to be designed in design stage and reviewed by the independent peer review engineer.

Specifications:

Design/Material/Construction Specifications for this product are specified on PennDOT Drawing 15-601-BDTD dated on May 31, 2016 for your use.

Comments:

None.

INTRODUCTION

THESE PLANS ARE INTENDED TO SERVE AS THE BASIS FOR STANDARDIZING THE DESIGN, DETAILING, FABRICATION, AND ERECTION OF PLANT-CAST PRECAST, PRETENSIONED CONCRETE GIRDERS THAT HAVE BEEN SEGMENTED FOR TRANSPORTATION AND ERECTION PURPOSES AND ASSEMBLED AT THE PROJECT SITE USING POST-TENSIONING TECHNOLOGY. SEGMENTATION IS ASSUMED TO RESULT IN MULTIPLE PIECES OF VARYING LENGTH. ASSEMBLY OF THE SEGMENTS IS ASSUMED TO TAKE PLACE ON FALSEWORK IN THE GIRDERS' FINAL POSITION IN THE BRIDGE

WHILE THESE STANDARDS HAVE BEEN DEVELOPED TO BE APPLICABLE FOR A TYPICAL RANGE OF VARIATION OF PROJECT PARAMETERS, IT SHOULD BE RECOGNIZED THAT THE DESIGN CRITERIA AND THE PARTICULAR GEOMETRY FOR A BRIDGE PROJECT MAY NECESSITATE THAT THE DETAILS CONTAINED HEREIN BE ADAPTED TO CONFORM TO THE SPECIFICS OF THE PROJECT. PROPER ENGINEERING JUDGEMENT MUST BE USED IN ALL CASES.

GENERAL NOTES

1. SPECIFICATIONS

PENNDOT DESIGN MANUAL DM-4.
AASHTO LRFD BRIDGE DESIGN SPECIFICATIONS, CURRENT EDITION.
PENNDOT SPECIFICATIONS, PUBLICATION 408/CURRENT EDITION.

1.1 DESIGN CRITERIA

BEAMS AND POST-TENSIONING SHALL BE DESIGNED IN ACCORDANCE WITH PENNDOT SOFTWARE.

FOR THE BEAM PRESTRESSING SEGMENT DESIGN, USE APPROPRIATE CONSTRUCTION LOAD OF AASHTO SECTION 5.14.2.3.2 AS THE DESIGN LOAD. THE BEAM SEGMENT DESIGN IS SPECIFIED IN AASHTO SECTION 5.14.13.3.

DESIGN LIVE LOADS AND DEAD LOADS IN ACCORDANCE WITH DM-4 SECTION PP1.7.

2. MATERIALS

2.1 CONCRETE

MINIMUM CONCRETE 28-DAY STRENGTH:
GIRDER SEGMENTS: PER DESIGN
CLOSURE POURS: PER DESIGN (NOTE THAT CLOSURE POURS ARE C.I.P., CLOSURE f'c NEED NOT MATCH GIRDER f'c)

2.2 REINFORCING STEEL

GRADE 60 REINFORCING STEEL BARS THAT MEET THE REQUIREMENTS OF ASTM A615/A615M-96A, A996/A996M OR 706/A706M-96-B (WWF MEETING ASTM 1064 MAY BE SUBSTITUTED AT EOR'S APPROVAL).

MINIMUM LAP AND EMBEDMENT LENGTH OF 30 DIAMETERS OR IN ACCORDANCE WITH AASHTO, AS MODIFIED BY DM-4, WHICHEVER IS GREATER.

2.3 PRESTRESSING STEEL

2.3.1 PRETENSIONING

UNCOATED 7-WIRE LOW-RELAXATION STRANDS MEETING THE REQUIREMENTS OF ASTM A416 GRADE 270, MODULUS OF ELASTICITY 28,000 KSI SHALL BE USED.

2.3.2 POST-TENSIONING

2.3.2.1 GENERAL

UNCOATED 7-WIRE LOW-RELAXATION STRANDS MEETING THE REQUIREMENTS OF ASTM A416 GRADE 270, MODULUS OF ELASTICITY 28,000 KSI SHALL BE USED.
MAXIMUM JACKING STRESS: 216 KSI
MAXIMUM ANCHORING STRESS AS ANCHORAGE: 189 KSI
ANCHOR SET: ⅜"
FRICTION COEFFICIENT: 0.18
WOBBLE COEFFICIENT: 0.0002 RAD/FT

2.3.2.2 ACCEPTANCE TESTING OF SPECIAL ANCHORAGE DEVICES

SPECIAL ANCHORAGE DEVICES SHALL COMPLY WITH THE TESTING REQUIREMENTS OF ARTICLE 10.3.2.3 OF THE AASHTO LRFD CONSTRUCTION SPECIFICATIONS.

2.4 DUCTS

USE CORRUGATED PLASTIC POST-TENSIONING DUCTS WHERE APPLICABLE. CORRUGATED GALVANIZED STEEL DUCTS MUST BE USED WHEN REQUIRED TO MEET AASHTO ALLOWABLE RADIUS LIMITS.

2.4.1 PLASTIC DUCTS

CORRUGATED DUCT MANUFACTURED FORM NON-COLORED, UNFILLED POLYPROPYLENE MEETING THE REQUIREMENTS OF ASTM D4101 STANDARD SPECIFICATION FOR POLYPROPYLENE PLASTIC INJECTION AND EXTRUSION MATERIALS WITH A CELL CLASSIFICATION RANGE OF PP0340B14541 TO PP0340B67884 SHALL BE USED. THE DUCT SHALL BE WHITE IN COLOR CONTAINING ANTIOXIDANT(S) WITH A MINIMUM OXIDATION INDUCTION TIME (OIT) ACCORDING TO ASTM D3895 OF 20 MINUTES AND CONTAINING A NON-YELLOWING LIGHT STABILIZER. THE DUCT DIAMETER SHALL BE APPROPRIATELY SIZED BY THE DESIGN ENGINEER WITH A MINIMUM WALL THICKNESS OF 0.10". THE AREA OF THE DUCT SHALL BE AT LEAST TWICE THE NET AREA OF THE PRESTRESSING STEEL IN THE DUCT.

CARE SHALL BE USED IN HANDLING AND INSTALLING DUCTS DURING THE FABRICATION PROCESS. DUCT ENDS SHALL BE CAPPED DURING CONCRETING OPERATIONS AND DURING SHIPPING TO PROTECT AGAINST INFILTRATION OF FOREIGN MATTER. DUCTS SHALL BE PROTECTED FROM DAMAGE AND SHIELDED FROM PROLONGED EXPOSURE TO SUNLIGHT DURING STORAGE, SHIPPING AND DURING THE SEGMENT ASSEMBLY PROCESS.

2.4.2 METAL DUCTS

METAL DUCTS SHALL BE CORRUGATED GRADE 60 GALVANIZED IN CONFORMANCE WITH ASTM A653. DUCT WALLS SHALL HAVE A MINIMUM THICKNESS OF 24 GAUGE.

2.5 GROUT

ONLY GROUTS LISTED IN PENNDOT BULLETIN 15, APPROVED CONSTRUCTION MATERIALS SHALL BE USED.

3. DESIGN

3.1 GIRDER SHAPE AND SIZE

PCI PRECAST U-GIRDER STANDARDS SERVE AS THE BASIS FOR THESE STANDARDS.

3.2 SEGMENT DESIGN

GIRDER SEGMENTS SHALL BE DESIGNED TO RESIST BEAM SELF-WEIGHT PLUS HANDLING AND CONSTRUCTION LOADS AS PER THE SPECIFICATIONS. PRETENSIONING AND/OR POST-TENSIONING IS ASSUMED TO BE THE PRIMARY FLEXURAL REINFORCEMENT FOR THE SEGMENTS. STRAND PATTERN PROFILES SHALL BE STRAIGHT.

3.3 ASSEMBLED GIRDER

PRIMARY FLEXURAL REINFORCEMENT RESISTING LOADS APPLIED TO THE GIRDER IN ITS FINAL CONFIGURATION IS ASSUMED TO BE POST-TENSIONING. DETAILS AND DUCT LAYOUTS SHOWN IN THESE STANDARDS ARE PRESENTED AS TYPICAL. THE ACTUAL NUMBER, SIZE, AND LAYOUT OF TENDONS ARE PROJECT SPECIFIC. MINIMUM DUCT SPACING SHALL BE 5", THE OUTER DUCT DIAMETER PLUS 1.5 TIMES MAXIMUM AGGREGATE SIZE, OR THE OUTER DUCT DIAMETER PLUS 2", WHICHEVER IS GREATER. SIZE AND SPACING OF NON-PRESTRESSED REINFORCEMENT SHALL BE AS PER PROJECT REQUIREMENTS.

CONSTRUCTION AND WIND LOADS AND ALL OTHER LOADS THAT ACT ON THE GIRDERS THAT MAY CAUSE LATERAL-TORSIONAL INSTABILITY SHALL BE CONSIDERED IN THE DESIGN OF THE GIRDER AND THE DESIGN OF THE CONSTRUCTION AND ERECTION SCHEMES.
TEMPORARY PRESTRESSING MAY BE NECESSARY FOR THE HANDLING, TRANSPORTATION AND ERECTING OF GIRDERS. THE ENGINEER SHALL EVALUATE THE NEED FOR TEMPORARY PRESTRESSING BASED ON PROJECT SPECIFIC CONDITIONS.

3.4 ANCHORAGE ZONES

LOCAL ZONE REINFORCEMENT SHALL BE DESIGNED BY THE POST-TENSIONING SYSTEM SUPPLIER. GENERAL ZONE REINFORCEMENT SHALL BE DESIGNED BY THE ENGINEER.

4. SEGMENT FABRICATION

4.1 FABRICATION TOLERANCES

FABRICATION TOLERANCES SHALL BE IN ACCORDANCE WITH SECTION 1107 OF THE PENNDOT SPECIFICATIONS, PUBLICATION 408. ADDITIONALLY, VERTICAL AND HORIZONTAL POSITION OF DUCT SHALL BE ±⅛".

4.2 FORMING

METAL SIDE FORMS SHALL BE USED FOR SEGMENT FABRICATION. CARE SHALL BE TAKEN TO ENSURE THAT SEGMENT ENDS AND ALL EXTENDED STRANDS, REINFORCEMENT, AND DUCTS MATCH TO THE CORRESPONDING ENDS OF ADJACENT SEGMENTS

4.3 DUCTS

MAXIMUM SPACING OF SUPPORT BARS FOR THE POST-TENSIONING DUCTS SHALL BE 2' -0". DUCTS SHALL BE AIR-TESTED PRIOR TO CONCRETE PLACEMENT. UPON COMPLETION OF CONCRETE PLACEMENT, POST-TENSIONING DUCTS SHALL BE DEMONSTRATED TO BE FREE AND CLEAR OF ANY OBSTRUCTIONS OR DAMAGE AND ARE ABLE TO ACCEPT THE INTENDED POST-TENSIONING TENDONS BY PASSING A TORPEDO THROUGH THE DUCTS. TORPEDO HAVING THE SAME CROSS-SECTIONAL SHAPE AS THE DUCT AND BE 1/4" SMALLER ALL AROUND THAN THE CLEAR, NOMINAL INSIDE DIMENSION OF THE DUCT.

4.4 PRETENSIONING

GIRDER LENGTHS SHALL BE INCREASED AS NECESSARY TO COMPENSATE FOR SHORTENING DUE TO PRETENSIONING AND POST-TENSIONING AND SHRINKAGE.
EXCEPT FOR EXTENDED STRANDS AS SHOWN, CUT ALL REMAINING STRANDS 1" BELOW SURFACE OF GIRDER END AND PAINT WITH AN APPROVED EPOXY RESIN.

4.5 SURFACE TREATMENTS

4.5.1 TOP OF GIRDER

THE TOP SURFACE OF THE GIRDER FLANGE SHALL RECEIVE A RAKED FINISH TO 1/4" AMPLITUDE

4.5.2 SEGMENT ENDS

SEGMENT ENDS OF CLOSURE POURS SHALL HAVE A SAWTOOTH SURFACE TREATMENT AND PROTRUDING REINFORCEMENT AS DETAILED IN THESE STANDARDS.

5. SEGMENT ASSEMBLY

5.1 SEGMENT HANDLING
SEGMENTS SHALL ONLY BE HANDLED, HAULED, AND STORED IN AN UPRIGHT POSITION. ONLY LIFTING LOOPS OR DEVICES PROVIDED AND ENDS SHALL BE USED TO HANDLE THE SEGMENTS.

5.2 SEGMENT ALIGNMENT

SEGMENTS SHALL BE SET ON PERMANENT SUPPORTS AND FALSEWORK FOUNDED ON LEVEL GROUND CAPABLE OF SAFELY SUPPORTING THE REQUIRED BEARING PRESSURES. CARE SHALL BE TAKEN SO THAT SEGMENTS ARE ERECTED TO THE ELEVATIONS SHOWN ON THE PLANS. ENSURE PROPER ALIGNMENT OF SEGMENTS AT ENDS WITHIN ⅛" IN TRANSVERSE, VERTICAL, AND HORIZONTAL DIRECTIONS. ALIGN SEGMENTS TO ALLOW FOR SPLICING OF PT DUCTS.

5.3 POST-TENSIONING

GIRDERS SHALL NOT BE STRESSED UNTIL THE GIRDER AND CLOSURE POUR CONCRETE MEET THEIR DESIGN STRENGTHS. STRESSING SHALL COMMENCE TO THE SEQUENCE SHOWN IN THE PLANS. CONDUCT POST-TENSIONING OPERATIONS IN ACCORDANCE WITH PUBLICATION 408, SECTION 1108.

5.4 GROUTING

GROUTING OPERATION SHALL BE COMMENCED PROMPTLY AFTER COMPLETION OF POST-TENSIONING OPERATION.

5.5 ANCHORAGE PROTECTION

PERMANENT GROUT END CAPS SHALL BE INSTALLED AND GROUTED IN ACCORDANCE WITH POST-TENSIONING SUPPLIERS RECOMMENDATIONS. ANCHORAGE RECESSES IN END GIRDER END SEGMENTS SHALL BE FILLED WITH EPOXY-MODIFIED MORTAR.
UPON COMPLETION AND INSPECTION OF GROUTING OPERATION, ANCHORAGE BLOCK-OUTS SHALL BE FILLED WITH EPOXY-MODIFIED GROUT.

5.6 CLOSURE POUR

ALIGNMENT OF GIRDER SEGMENTS SHALL BE CHECKED IMMEDIATELY PRIOR TO PLACEMENT OF CLOSURE POUR CONCRETE.

6. HANDLING AND ERECTION OF ASSEMBLED GIRDER

STABILITY OF GIRDERS IS TO BE MAINTAINED BY THE CONTRACTOR DURING ERECTION, UNTIL ALL GIRDERS AND DIAPHRAGMS ARE IN PLACE. ERECTION LOADS INCLUDING SELF WEIGHT OF THE GIRDERS, WIND LOADING AND CONSTRUCTION LIVE LOAD EFFECTS ARE TO BE EVALUATED BY THE CONTRACTOR FOR STABILITY, STRESSES AND DEFLECTIONS ON THE GIRDERS DURING ANY STAGE OF ERECTION.

LIFTING MEANS AND HARDWARE SHALL BE DESIGNED BY THE CONTRACTOR AND SHALL BE INCLUDED IN THE SHOP DRAWINGS. EXTREME CAUTION SHALL BE EXERCISED IN ALL LIFTING, HANDLING, AND PLACING OPERATIONS OF GIRDERS. ADEQUATE BRACING SHALL BE USED TO ENSURE STABILITY AT ALL TIMES AGAINST TIPPING, LATERAL DEFLECTION, AND LATERAL BUCKLING. CONSTRUCTION LOADS AND WIND LOADS AND ALL OTHER LOADS THAT ACT ON THE GIRDERS TO CAUSE VERTICAL AND LATERAL INSTABILITY SHALL BE CONSIDERED IN THE DESIGN OF THE ERECTION SCHEME. CAUTION SHOULD BE EXERCISED WHEN SETTING GIRDERS ON BEARINGS TO ENSURE THAT GIRDER SWEEP IS NOT AMPLIFIED BY INADEQUATE ROTATIONAL RESISTANCE OF BEARINGS. TRANSVERSE BRACING SHOULD BE SECURELY INSTALLED BETWEEN GIRDERS PRIOR TO REMOVAL OF CRANE LOAD FROM GIRDER ENDS. ADDITIONAL INTERMEDIATE CROSS BRACING SHOULD BE INSTALLED ONCE THE GIRDER ENDS ARE SECURE.

INDEX OF DRAWINGS

U-1	GENERAL NOTES
U-2	TYPICAL BRIDGE CROSS SECTIONS
U-3	SINGLE SPAN GIRDER LAYOUT -CONSTANT DEPTH GIRDERS
U-4	THREE SPAN GIRDER LAYOUT - CONSTANT DEPTH GIRDERS
U-5	THREE SPAN GIRDER LAYOUT - VARIABLE AND CONSTANT DEPTH GIRDERS
U-6	TYPICAL DETAILS 1 - GIRDER DIMENSIONS & REINFORCEMENT
U-7	TYPICAL DETAILS 2 - GIRDER END DIAPHRAGMS & SPLICES
U-8	TYPICAL DETAILS 3 - EXPANSION END DETAILS
U-9	ANCHORAGE BLOCKOUT DETAILS
U-10	PRECAST GIRDER DETAILS 1 - END GIRDER
U-11	PRECAST GIRDER DETAILS 2 - PIER GIRDER
U-12	PRECAST GIRDER DETAILS 3 - DROP IN GIRDER
U-13	SUBSTRUCTURE DETAILS 1 - EXPANSION PIERS & ABUTMENTS
U-14	SUBSTRUCTURE DETAILS 2 - INTERIOR PIERS
U-15	ERECTION SCHEMATICS 1 - SINGLE SPAN, CONSTANT DEPTH
U-16	ERECTION SCHEMATICS 2 - 3 SPAN UNIT, CONSTANT DEPTH
U-17	ERECTION SCHEMATICS 3 - 3 SPAN UNIT, VARIABLE DEPTH
U-18	CONSTRUCTION DETAILS 1 - TEMPORARY SHORING AND GEOMETRY CONTROL
U-19	CONSTRUCTION DETAILS 2 - ERECTION AND LIFT PLAN
U-20	GROUTING SPECIFICATIONS 1
U-21	GROUTING SPECIFICATIONS 2
U-22	GROUTING SPECIFICATIONS 3
U-23	RATING PROCEDURE AND NOTES - 1
U-24	RATING PROCEDURE AND NOTES - 2
U-25	MOMENTS, SHEARS, TORSIONS; AND REACTIONS

PENNDOT DRAWING
15-601-BDTD

PENNSYLVANIA
DEPARTMENT OF TRANSPORTATION
RECOMMENDED
Thomas P Macioce
CHIEF BRIDGE ENGINEER

5/31/2016

COMMONWEALTH OF PENNSYLVANIA
REGISTERED PROFESSIONAL
GREGG A. REESE
ENGINEER
No. 044122R

5/20/16

CENTRAL ATLANTIC BRIDGE ASSOCIATES (CABA)	Summit Engineering Group, Incorporated — Consulting Structural Engineers — 10822 W. Toller Drive, Ste 330, Littleton, CO 80127, P: 303-933-9114, www.summit-eng-group.com
COMMONWEALTH OF PENNSYLVANIA DEPARTMENT OF TRANSPORTATION	DATE: 2/27/2015 SCALE N/A
SPLICED POST-TENSIONED CONCRETE U-GIRDER STANDARDS	DWN: GAR CH'D: MTR JOB NO.
OVERVIEW OF SYSTEM, INSTRUCTIONS GENERAL NOTES	SHEET NO. 1

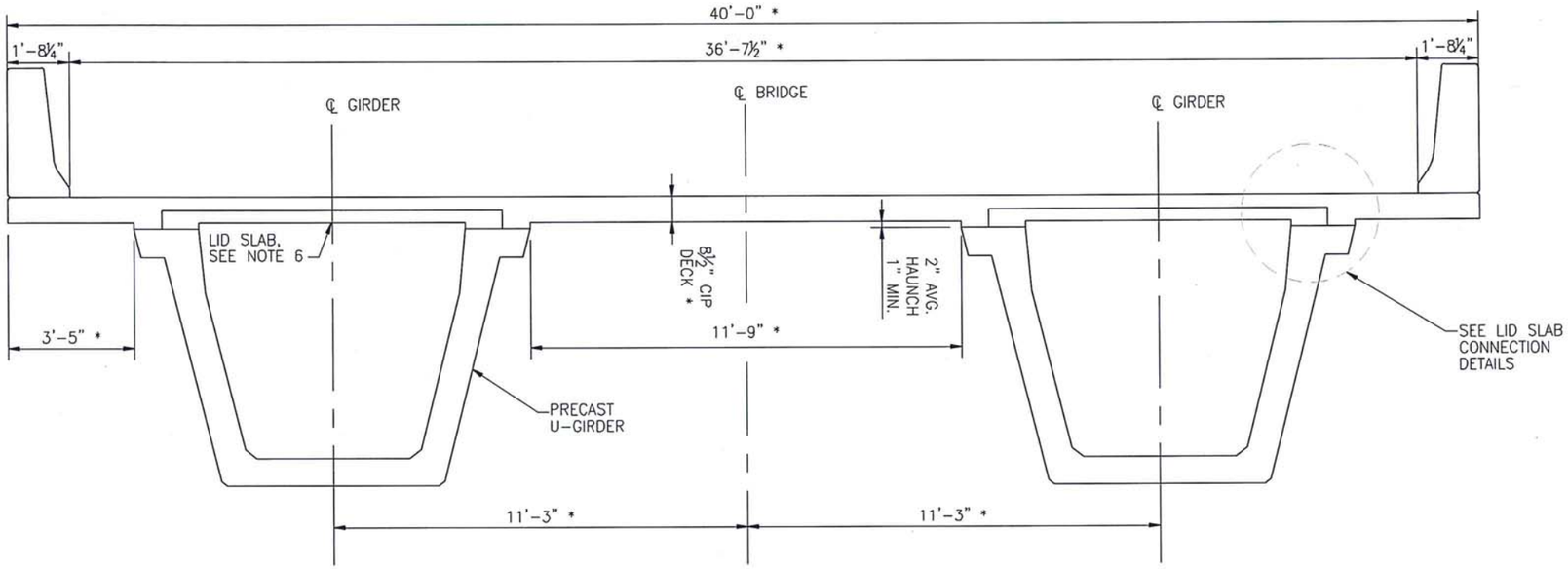

CROSS SECTION WITH GIRDER LID SLABS

(@ CURVED GIRDERS)

* BASED ON DESIGN EXAMPLE, SEE NOTE 5

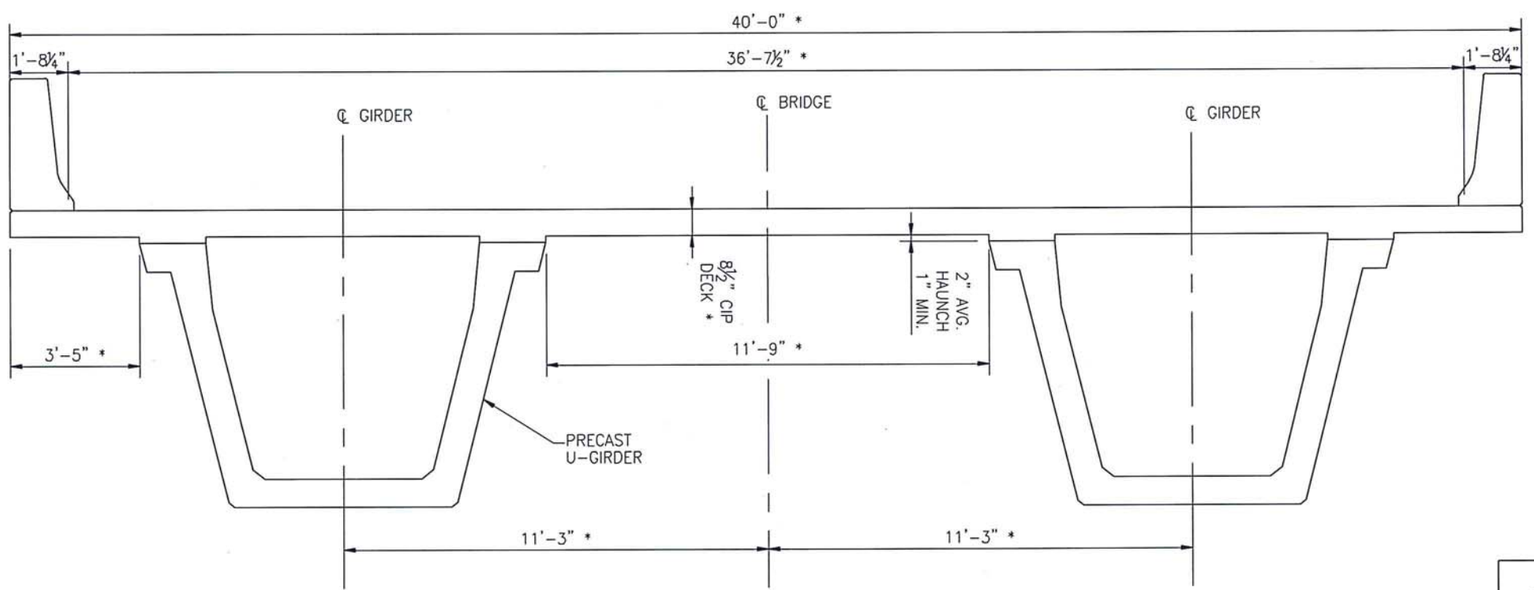

CROSS SECTION WITH CONVENTIONAL DECK

(@ STRAIGHT GIRDERS ONLY)

* BASED ON DESIGN EXAMPLE, SEE NOTE 5

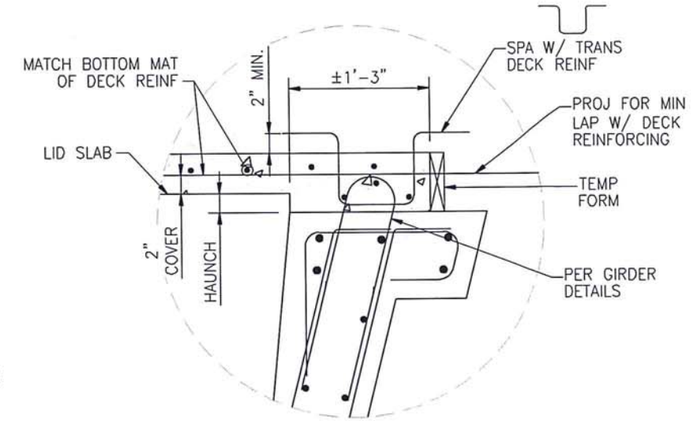

GIRDER/CIP LID SLAB CONNECTION

SEE NOTES 3 & 4

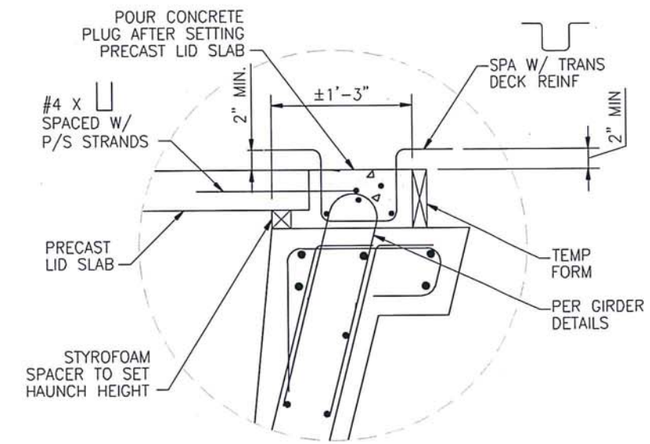

GIRDER/PRECAST LID SLAB CONNECTION

SEE NOTES 3 & 4

NOTES

1. INFORMATION SHOWN ON THIS DRAWING IS INTENDED TO ILLUSTRATE A WORKING CONCEPT FOR SPLICED U-GIRDERS.
2. ALL CONCRETE DIMENSIONS, INCLUDING DECK SLABS, AND REINFORCEMENT SHOWN ARE FOR ILLUSTRATION PURPOSES ONLY AND MAY VARY BASED ON INDIVIDUAL DESIGNS.
3. LID SLABS ARE REQUIRED FOR CURVED PRECAST GIRDER CONSTRUCTION TO PROVIDE A CLOSED CROSS SECTION WHEN CASTING THE DECK SLAB.
4. LID SLABS MAY CONSIST OF PRECAST DECK FORMS OR FORMED CIP CONCRETE AS SHOWN.
5. GIRDER SPACING AND DECK SLAB DIMENSIONS MAY VARY BASED ON ROADWAY DESIGN AND ARE LIMITED BY COST EFFECTIVENESS AND FORMING CONSIDERATIONS.
6. LID SLAB SHALL REMAIN IN PLACE DURING REDECKING OPERATIONS, UNLESS NOTED OTHERWISE.

PENNDOT DRAWING 15-601-BDTD

5/31/2016

COMMONWEALTH OF PENNSYLVANIA
REGISTERED PROFESSIONAL
GREGG A. REESE
ENGINEER
No. 044122R

5/20/16

CENTRAL ATLANTIC BRIDGE ASSOCIATES (CABA)	Summit Engineering Group, Incorporated — Consulting Structural Engineers — 10822 W. TOLLER DRIVE, STE 330 LITTLETON, CO 80127 P: 303-933-9114 www.summit-eng-group.com
COMMONWEALTH OF PENNSYLVANIA DEPARTMENT OF TRANSPORTATION	DATE:
	SCALE
SPLICED POST-TENSIONED CONCRETE U-GIRDER STANDARDS	DWN: CH'D:
	JOB NO.
TYPICAL BRIDGE CROSS SECTIONS	SHEET NO. 2

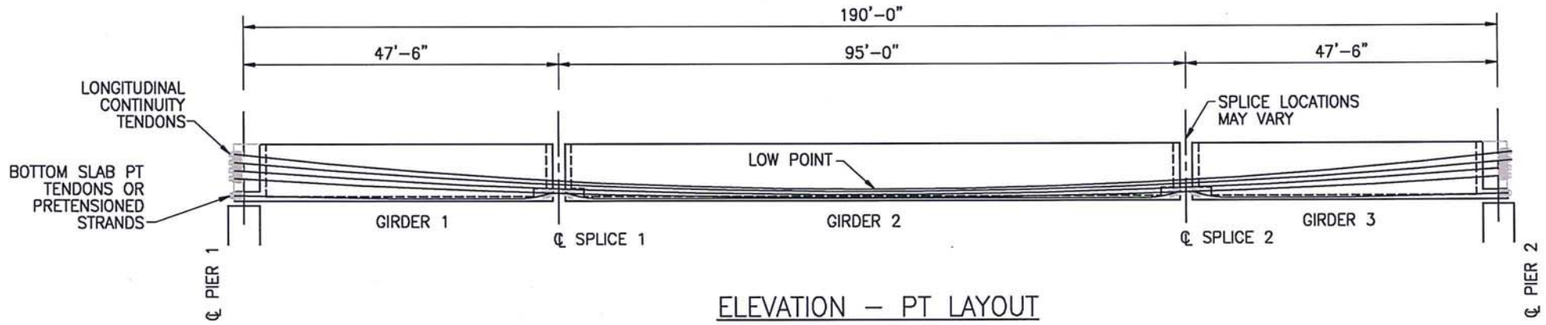

ELEVATION – PT LAYOUT

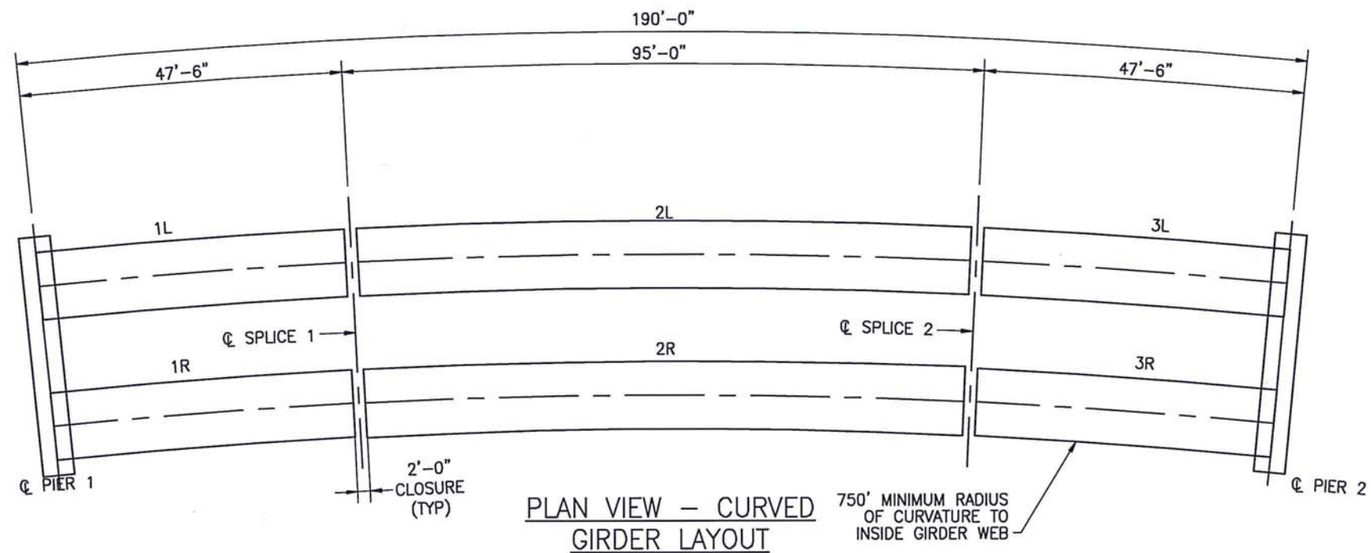

PLAN VIEW – CURVED GIRDER LAYOUT

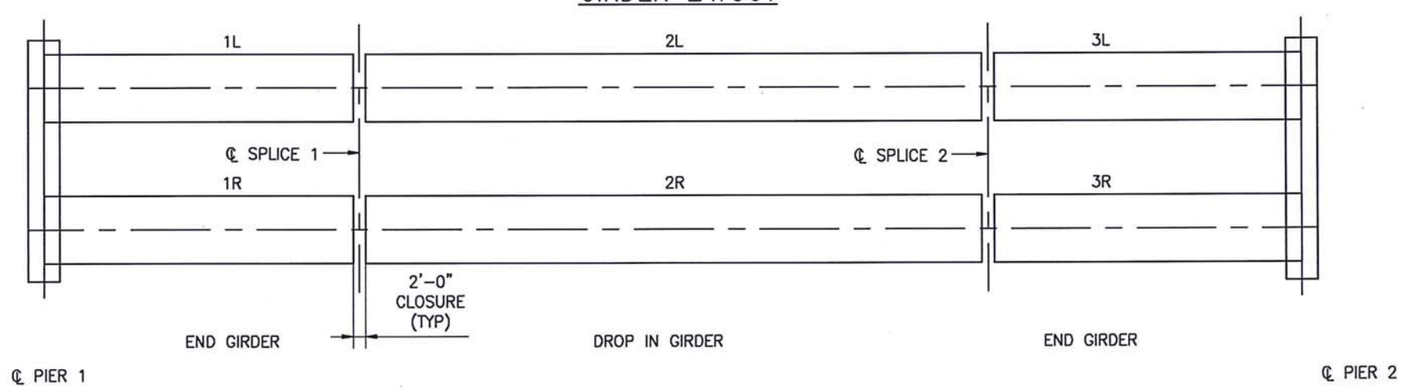

PLAN VIEW – STRAIGHT GIRDER LAYOUT

NOTES

1. THE SIMPLE SPAN UNIT SHOWN ON THIS DRAWING IS INTENDED TO ILLUSTRATE A WORKING CONCEPT FOR SPLICED U-GIRDERS.
2. SPAN LENGTHS MAY VARY UP TO A MAXIMUM RECOMMENDED SPAN/DEPTH RATIO OF ±25 (INCLUDING DECK SLAB).
3. GIRDER LENGTHS ARE DETERMINED BY HAULING LIMITS, SITE CONDITIONS AND/OR POSSIBLE LOCATIONS FOR SHORING TOWERS.
4. SPLICES MAY BE LOCATED AT ANY POINT ALONG THE SPAN.
5. SPLICE CONCRETE IS PLACED ON SITE WITH STRENGTHS THAT WILL TYPICALLY VARY FROM GIRDER CONCRETE.
6. ADJACENT CURVED GIRDERS MAY BE CAST ON A COMMON RADIUS, TYPICALLY ALONG THE CENTERLINE OF BRIDGE.
7. ALL CONCRETE DIMENSIONS AND REINFORCEMENT SHOWN ARE FOR ILLUSTRATION PURPOSES ONLY.
8. CURVED AND STRAIGHT GIRDERS MAY BE USED INTERCHANGEABLY WITHIN ANY SPAN TO ACCOMMODATE ROADWAY ALIGNMENT.

PENNDOT DRAWING 15-601-BDTD

5/31/2016

COMMONWEALTH OF PENNSYLVANIA
REGISTERED PROFESSIONAL
GREGG A. REESE
ENGINEER
No. 044122R

5/20/16

CENTRAL ATLANTIC BRIDGE ASSOCIATES (CABA)	Summit Consulting Structural Engineers, Incorporated — 10822 W. TOLLER DRIVE, STE 330, LITTLETON, CO 80127, P: 303-933-9114, www.summit-eng-group.com
COMMONWEALTH OF PENNSYLVANIA DEPARTMENT OF TRANSPORTATION	DATE:
	SCALE
SPLICED POST-TENSIONED CONCRETE U-GIRDER STANDARDS	DWN: / CH'D:
	JOB NO.
SINGLE SPAN GIRDER LAYOUT W/ CONSTANT DEPTH GIRDERS	SHEET NO. 3

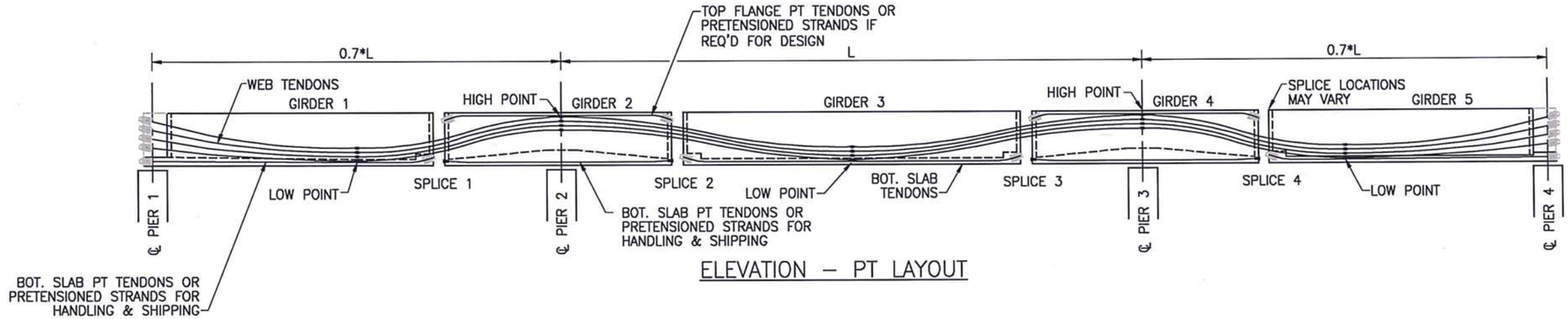

ELEVATION – PT LAYOUT

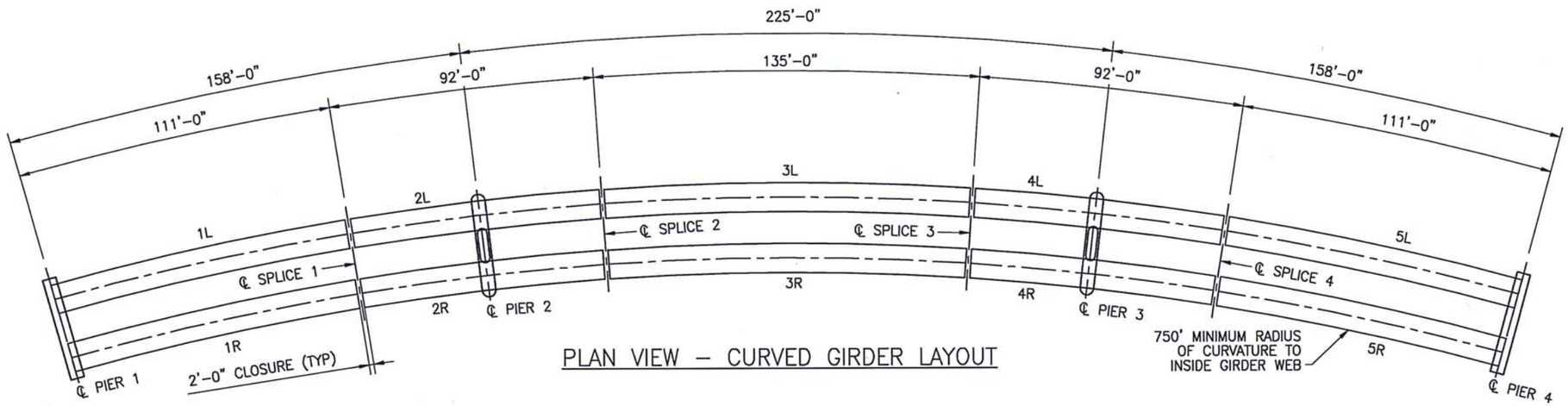

PLAN VIEW – CURVED GIRDER LAYOUT

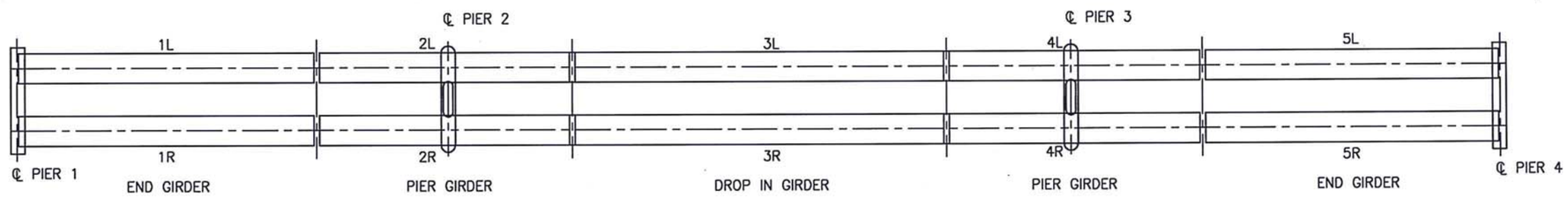

PLAN VIEW – STRAIGHT GIRDER LAYOUT

NOTES

1. THE 3 SPAN CONTINUOUS UNIT SHOWN ON THIS DRAWING IS INTENDED TO ILLUSTRATE A WORKING CONCEPT FOR SPLICED U-GIRDERS.
2. SPAN LENGTHS MAY VARY UP TO A MAXIMUM RECOMMENDED SPAN/DEPTH RATIO (INCLUDING DECK SLAB) OF ±30 FOR INTERIOR SPANS AND ±25 FOR END SPANS.
3. GIRDER LENGTHS ARE DETERMINED BY HAULING LIMITS, SITE CONDITIONS AND/OR POSSIBLE LOCATIONS FOR SHORING TOWERS.
4. SPLICES MAY BE LOCATED AT ANY POINT ALONG THE SPAN BUT ARE TYPICALLY PLACED AT 1/4 POINTS TO MINIMIZE FLEXURAL STRESSES.
5. SPLICE CONCRETE IS PLACED ON SITE WITH STRENGTHS THAT WILL TYPICALLY VARY FROM GIRDER CONCRETE.
6. ADJACENT CURVED GIRDERS MAY BE CAST ON A COMMON RADIUS, TYPICALLY ALONG THE CENTERLINE OF BRIDGE.
7. ALL CONCRETE DIMENSIONS AND REINFORCEMENT SHOWN ARE FOR ILLUSTRATION PURPOSES ONLY.
8. CURVED AND STRAIGHT GIRDERS MAY BE USED INTERCHANGEABLY WITHIN ANY SPAN TO ACCOMMODATE ROADWAY ALIGNMENT.

PENNDOT DRAWING 15-601-BDTD

5/31/2016

COMMONWEALTH OF PENNSYLVANIA
REGISTERED PROFESSIONAL
GREGG A. REESE
ENGINEER
No. 044122R

5/20/16

CENTRAL ATLANTIC BRIDGE ASSOCIATES (CABA)	Summit Engineering, Incorporated — Consulting Structural Engineers — 10622 W. TOLLER DRIVE, STE 330, LITTLETON, CO 80127, P: 303-933-9114, www.summit-eng-group.com
COMMONWEALTH OF PENNSYLVANIA DEPARTMENT OF TRANSPORTATION	DATE:
	SCALE
SPLICED POST-TENSIONED CONCRETE U-GIRDER STANDARDS	DWN: CH'D:
	JOB NO.
THREE-SPAN GIRDER LAYOUT W/ CONSTANT DEPTH GIRDERS	SHEET NO. 4

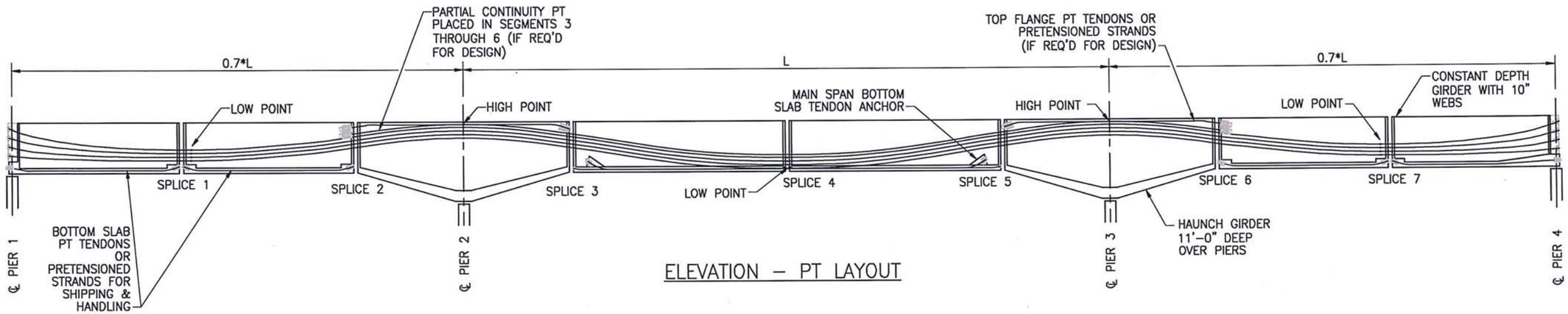

ELEVATION – PT LAYOUT

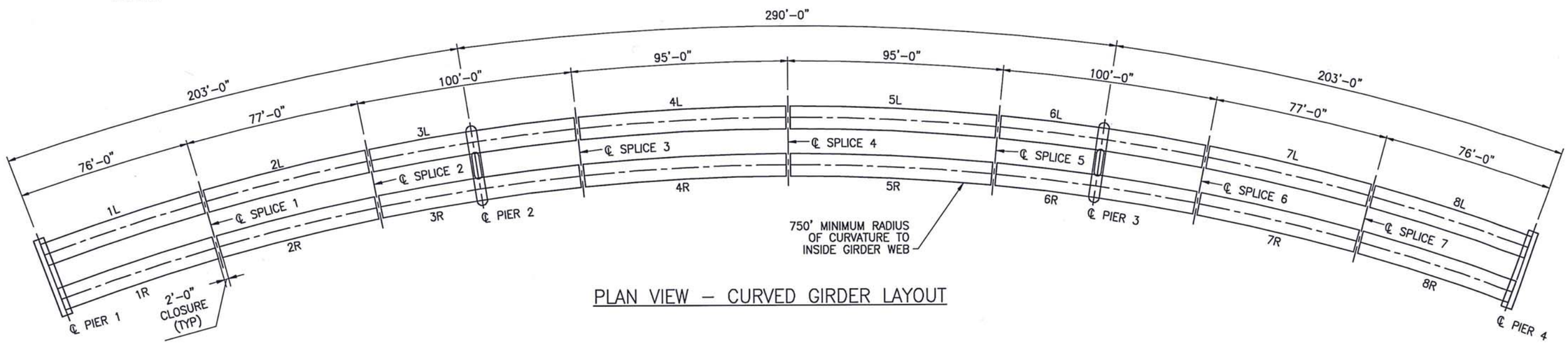

PLAN VIEW – CURVED GIRDER LAYOUT

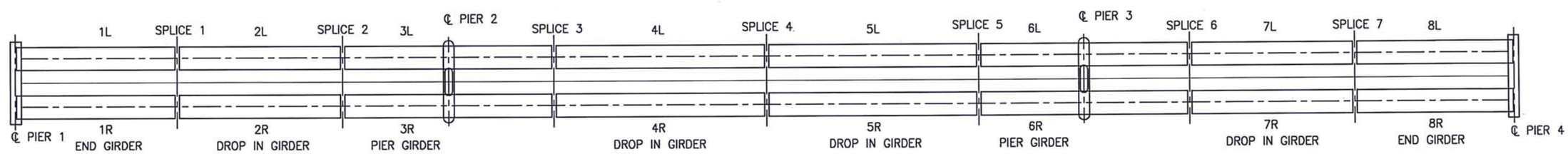

PLAN VIEW – STRAIGHT GIRDER LAYOUT

NOTES

1. THE 3 SPAN CONTINUOUS UNIT SHOWN ON THIS DRAWING IS INTENDED TO ILLUSTRATE A WORKING CONCEPT FOR SPLICED U-GIRDERS.
2. SPAN LENGTHS MAY VARY UP TO A MAXIMUM RECOMMENDED SPAN/DEPTH RATIO (@ MAX HAUNCH, INCLUDING SLAB) OF ±25 FOR INTERIOR SPANS.
3. GIRDER LENGTHS ARE DETERMINED BY HAULING LIMITS, SITE CONDITIONS AND/OR POSSIBLE LOCATIONS FOR SHORING TOWERS.
4. SPLICES MAY BE LOCATED AT ANY POINT ALONG THE SPAN BUT ARE TYPICALLY PLACED AT 1/4 POINTS TO MINIMIZE FLEXURAL STRESSES.
5. SPLICE CONCRETE IS PLACED ON SITE WITH STRENGTHS THAT WILL TYPICALLY VARY FROM GIRDER CONCRETE.
6. ADJACENT CURVED GIRDERS MAY BE CAST ON A COMMON RADIUS, TYPICALLY ALONG THE CENTERLINE OF BRIDGE.
7. ALL CONCRETE DIMENSIONS AND REINFORCEMENT SHOWN ARE FOR ILLUSTRATION PURPOSES ONLY.
8. CURVED AND STRAIGHT GIRDERS MAY BE USED INTERCHANGEABLY WITHIN ANY SPAN TO ACCOMMODATE ROADWAY ALIGNMENT.

PENNDOT DRAWING 15-601-BDTD

5/31/2016

COMMONWEALTH OF PENNSYLVANIA
REGISTERED PROFESSIONAL
GREGG A. REESE
ENGINEER
No. 044122R

5/20/16

CENTRAL ATLANTIC BRIDGE ASSOCIATES (CABA)	Summit Design, Incorporated Consulting Structural Engineers — 10822 W. TOLLER DRIVE, STE 330 LITTLETON, CO 80127 P: 303-933-9114 www.summit-eng-group.com	
COMMONWEALTH OF PENNSYLVANIA DEPARTMENT OF TRANSPORTATION	DATE:	
	SCALE	
SPLICED POST-TENSIONED CONCRETE U-GIRDER STANDARDS	DWN:	CH'D:
	JOB NO.	
THREE SPAN GIRDER LAYOUT W/ VARIABLE & CONSTANT DEPTH GIRDERS	SHEET NO. 5	

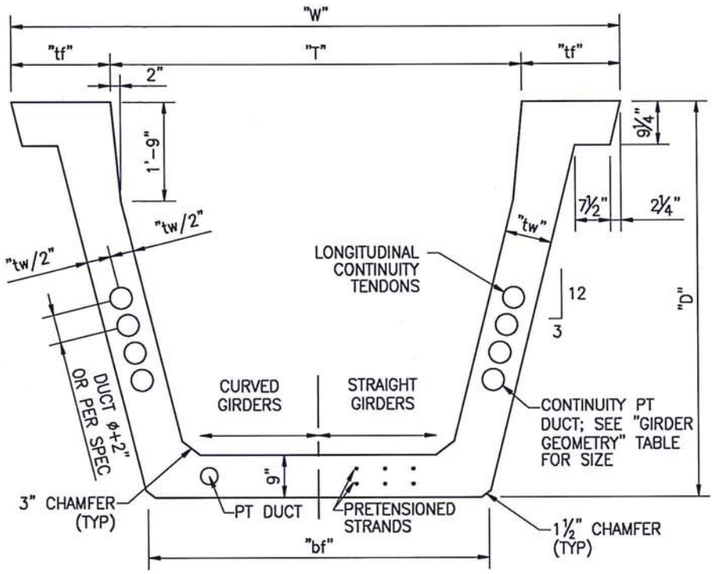

TYPICAL GIRDER GEOMETRY

** PT TENDONS REQ'D IN BOTTOM OF CURVED GIRDERS. PT TENDONS OR PRETENSIONED STRANDS MAY BE USED IN STRAIGHT GIRDERS.

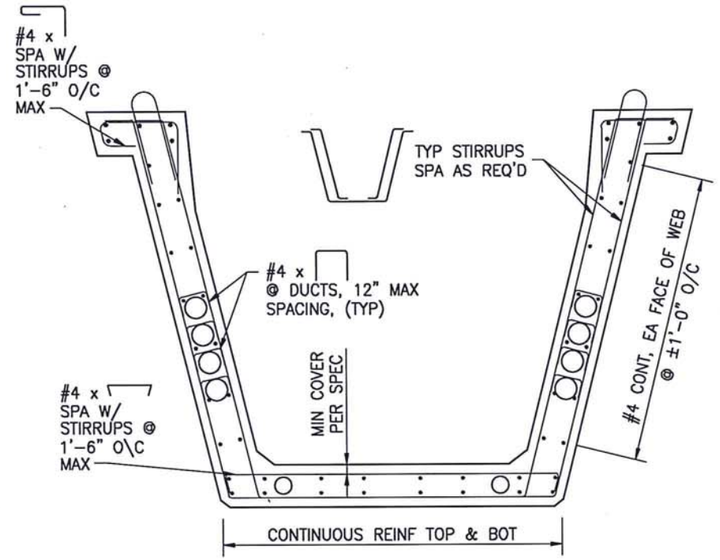

TYPICAL GIRDER REINFORCING

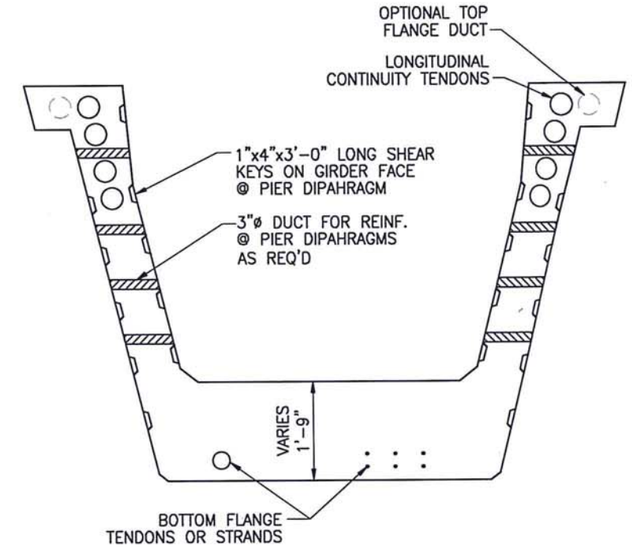

GIRDER GEOMETRY OVER PIER

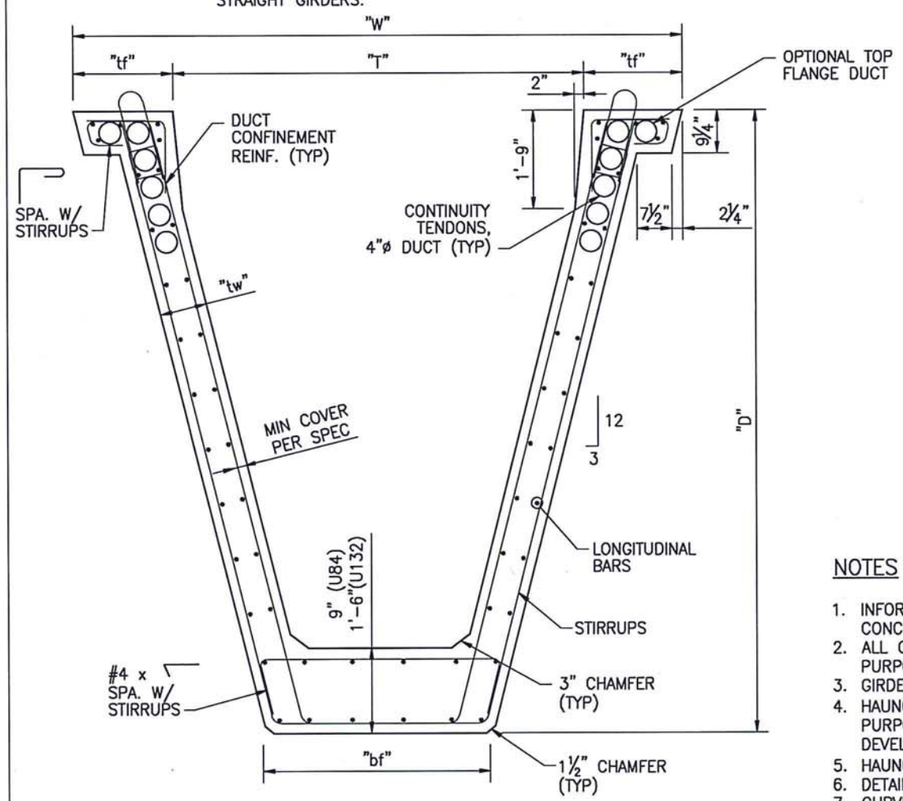

HAUNCHED GIRDER GEOMETRY & REINFORCING

GIRDER GEOMETRY

GIRDER	D	DUCT ø	tw	W	T	tf	bf	WEIGHT
U72-3	6'-0"	3"	9"	10'-1"	6'-9"	1'-8"	5'-10"	2,117 plf
U84-3	7'-0"	3"	9"	10'-7"	7'-3"	1'-8"	5'-10"	2,349 plf
U96-3	8'-0"	3"	9"	11'-1"	7'-9"	1'-8"	5'-10"	2,581 plf
U72-4	6'-0"	4"	10"	10'-3"	6'-9"	1'-9"	6'-0"	2,271 plf
U84-4	7'-0"	4"	10"	10'-9"	7'-3"	1'-9"	6'-0"	2,529 plf
U96-4	8'-0"	4"	10"	11'-3"	7'-9"	1'-9"	6'-0"	2,787 plf
U84/132 HAUNCH	7'-0" @ ENDS	4"	10"	10'-9"	7'-3"	1'-9"	6'-0"	300 kips
	11'-0" @ MIDSPAN	4"	10"	10'-9"	7'-3"	1'-9"	4'-0"	

NOTES

1. INFORMATION SHOWN ON THIS DRAWING IS INTENDED TO ILLUSTRATE A WORKING CONCEPT FOR SPLICED U-GIRDERS.
2. ALL CONCRETE DIMENSIONS AND REINFORCEMENT SHOWN ARE FOR ILLUSTRATION PURPOSES ONLY AND MAY VARY BASED ON INDIVIDUAL DESIGNS.
3. GIRDER WEIGHTS ARE CALCULATED ASSUMING 150 PCF CONCRETE.
4. HAUNCHED GIRDER IS ASSUMED TO VARY FROM 84" TO 132" IN DEPTH FOR PURPOSES OF DEVELOPING STANDARD SHAPES. ALTERNATE DIMENSIONS MAY BE DEVELOPED TO MEET DIFFERING PROJECT REQUIREMENTS.
5. HAUNCHED GIRDER WEIGHT AS SHOWN ASSUMES 98' LENGTH.
6. DETAILS FOR BOTH CURVED AND STRAIGHT GIRDERS ARE SHOWN.
7. CURVED AND STRAIGHT GIRDERS MAY BE USED INTERCHANGEABLY WITHIN ANY SPAN TO ACCOMODATE ROADWAY ALIGNMENT.

5/31/2016

PENNDOT DRAWING 15-601-BDTD

COMMONWEALTH OF PENNSYLVANIA
REGISTERED PROFESSIONAL
GREGG A. REESE
ENGINEER
No. 044122R

5/20/16

CENTRAL ATLANTIC BRIDGE ASSOCIATES (CABA)	Summit Engineering Group, Incorporated — Consulting Structural Engineers — 10822 W. TOLLER DRIVE, STE 330, LITTLETON, CO 80127, P: 303-933-9114, www.summit-eng-group.com
COMMONWEALTH OF PENNSYLVANIA DEPARTMENT OF TRANSPORTATION	DATE:
	SCALE
SPLICED POST-TENSIONED CONCRETE U-GIRDER STANDARDS	DWN: CH'D:
	JOB NO.
TYPICAL DETAILS 1 CONCRETE DIMENSIONS AND REINFORCING	SHEET NO. 6

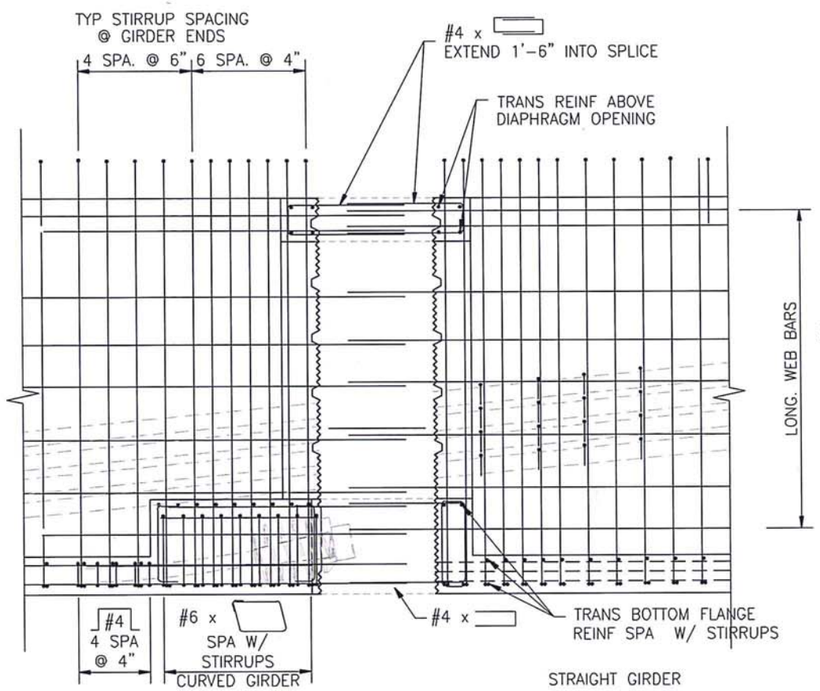

TYPICAL REINFORCING @ END OF GIRDER

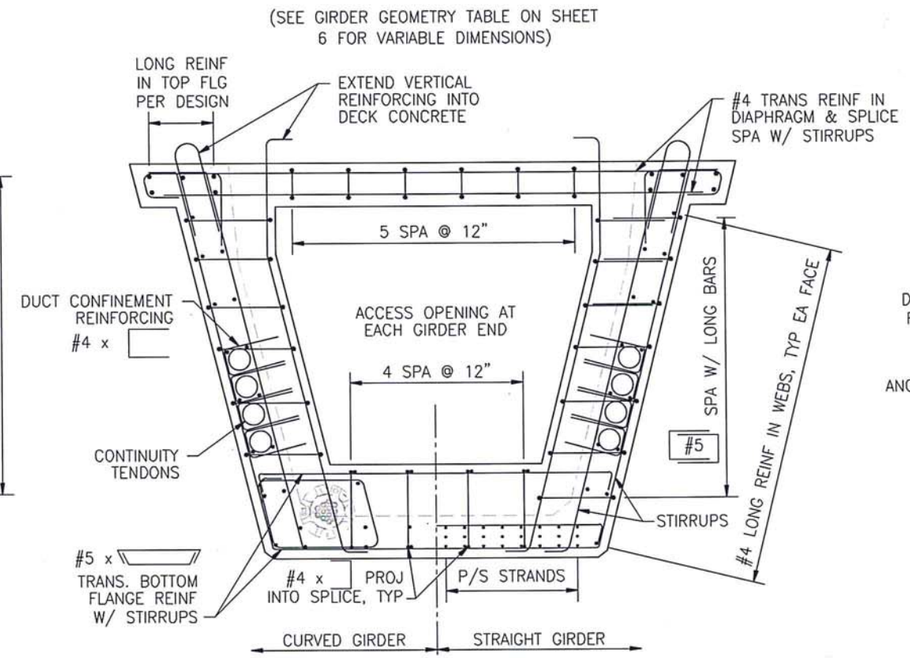

TYPICAL REINFORCING @ SPLICE & DIAPHRAGM

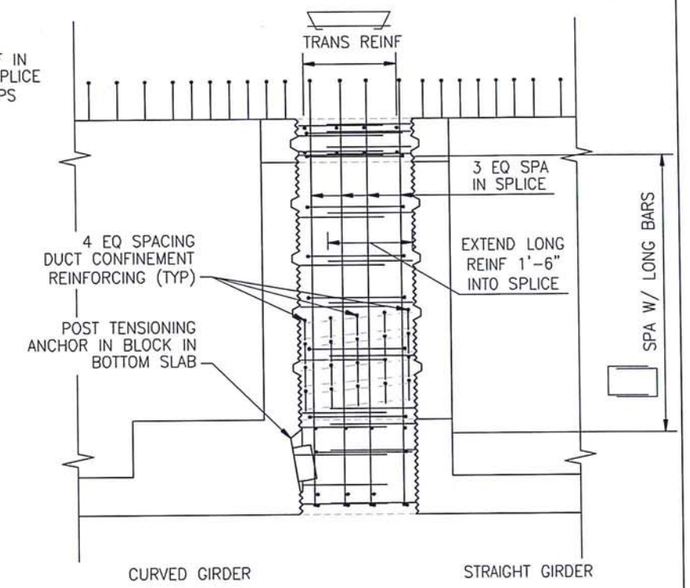

SPLICE REINFORCING SECTION

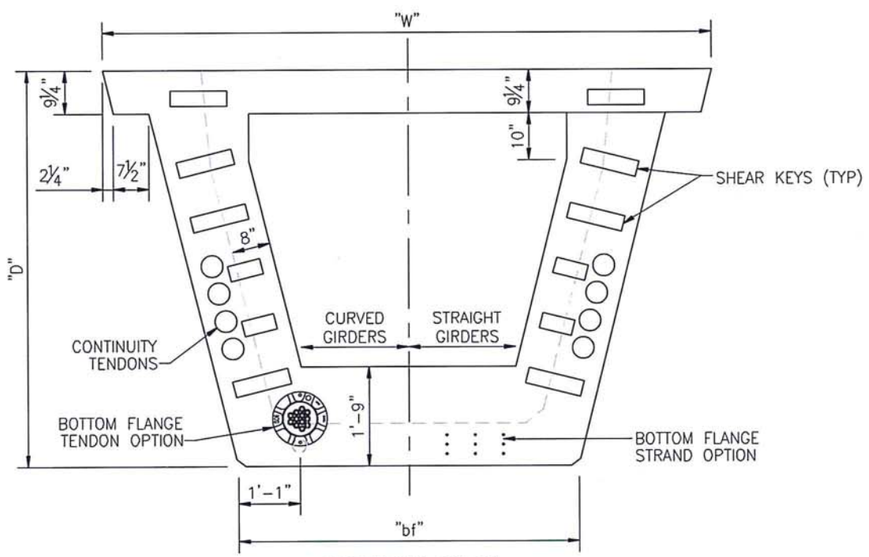

SECTION VIEW

** PT REQ'D IN BOTTOM OF CURVED GIRDERS. PT OR P/S STRANDS MAY BE USED IN STRAIGHT GIRDERS.

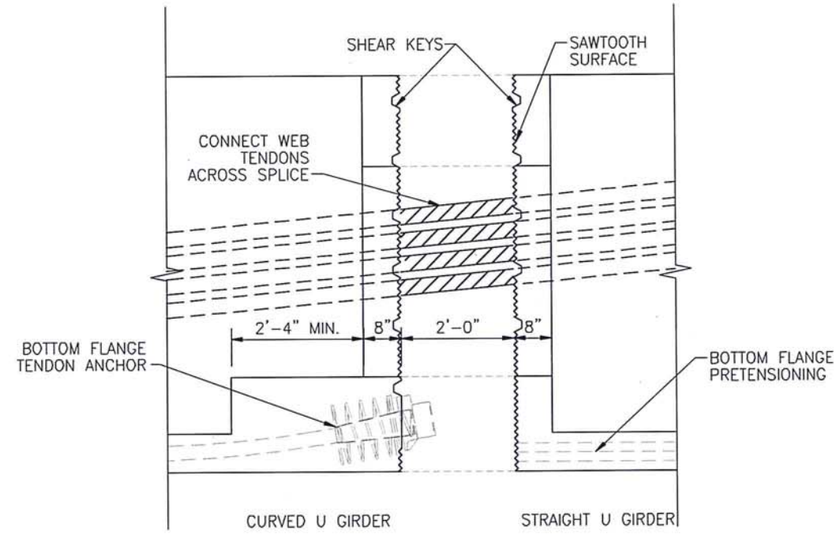

ELEVATION VIEW

GIRDER DIMENSIONS @ TYPICAL END DIAPHRAGMS

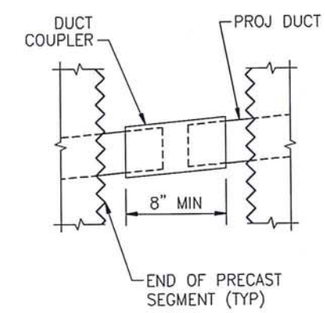

DUCT SPLICE DETAIL

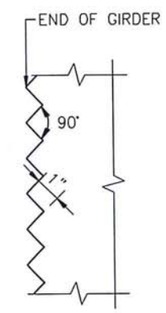

SAWTOOTH DETAIL

PENNDOT DRAWING 15-601-BDTD

NOTES

1. INFORMATION SHOWN ON THIS DRAWING IS INTENDED TO ILLUSTRATE A WORKING CONCEPT FOR SPLICED U-GIRDERS.
2. ALL CONCRETE DIMENSIONS AND REINFORCEMENT SHOWN ARE FOR ILLUSTRATION PURPOSES ONLY.
3. DETAILS FOR BOTH CURVED AND STRAIGHT GIRDERS ARE SHOWN.
4. CURVED AND STRAIGHT GIRDERS MAY BE USED INTERCHANGEABLY WITHIN ANY SPAN TO ACCOMODATE ROADWAY ALIGNMENT.

5/31/2016

5/20/16

COMMONWEALTH OF PENNSYLVANIA
REGISTERED PROFESSIONAL
GREGG A. REESE
ENGINEER
No. 044122R

CENTRAL ATLANTIC BRIDGE ASSOCIATES (CABA)	Summit Engineering Group, Incorporated Consulting Structural Engineers 10822 W. Toller Drive, Ste 330 Littleton, CO 80127 P: 303-933-9114 www.summit-eng-group.com	
COMMONWEALTH OF PENNSYLVANIA DEPARTMENT OF TRANSPORTATION	DATE:	
	SCALE	
SPLICED POST-TENSIONED CONCRETE U-GIRDER STANDARDS	DWN:	CH'D:
	JOB NO.	
TYPICAL DETAILS 2 GIRDER END AND SPLICES	SHEET NO. 7	

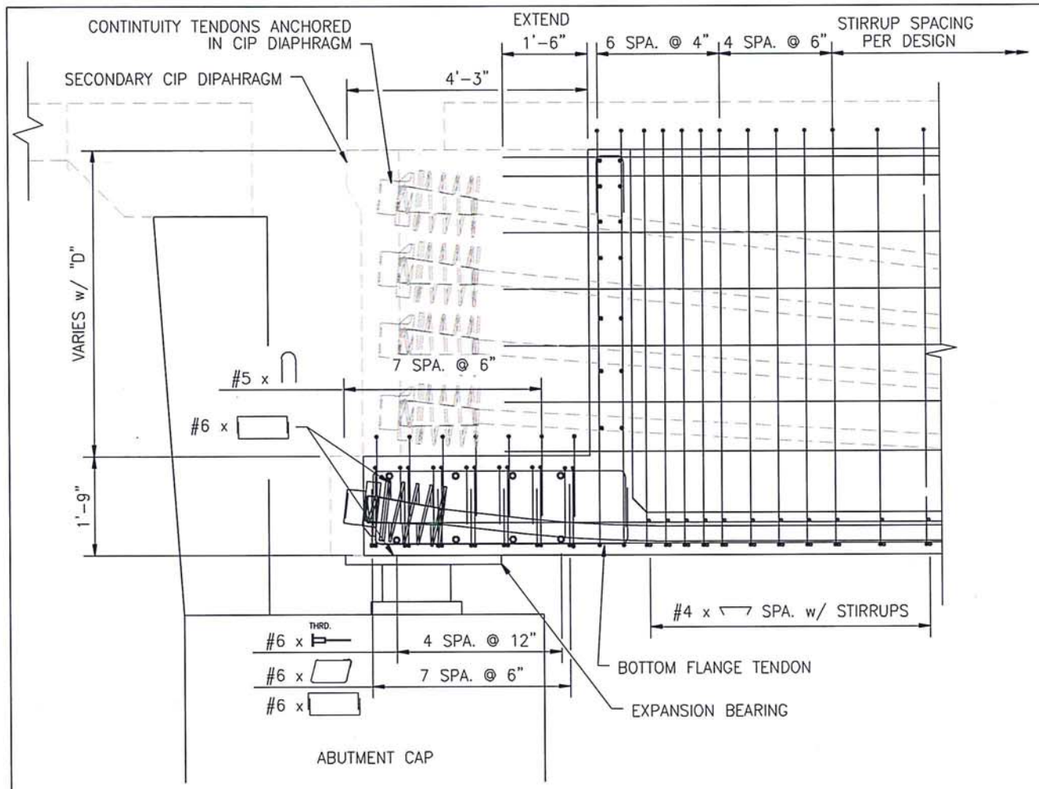

ELEVATION @ ABUTMENT

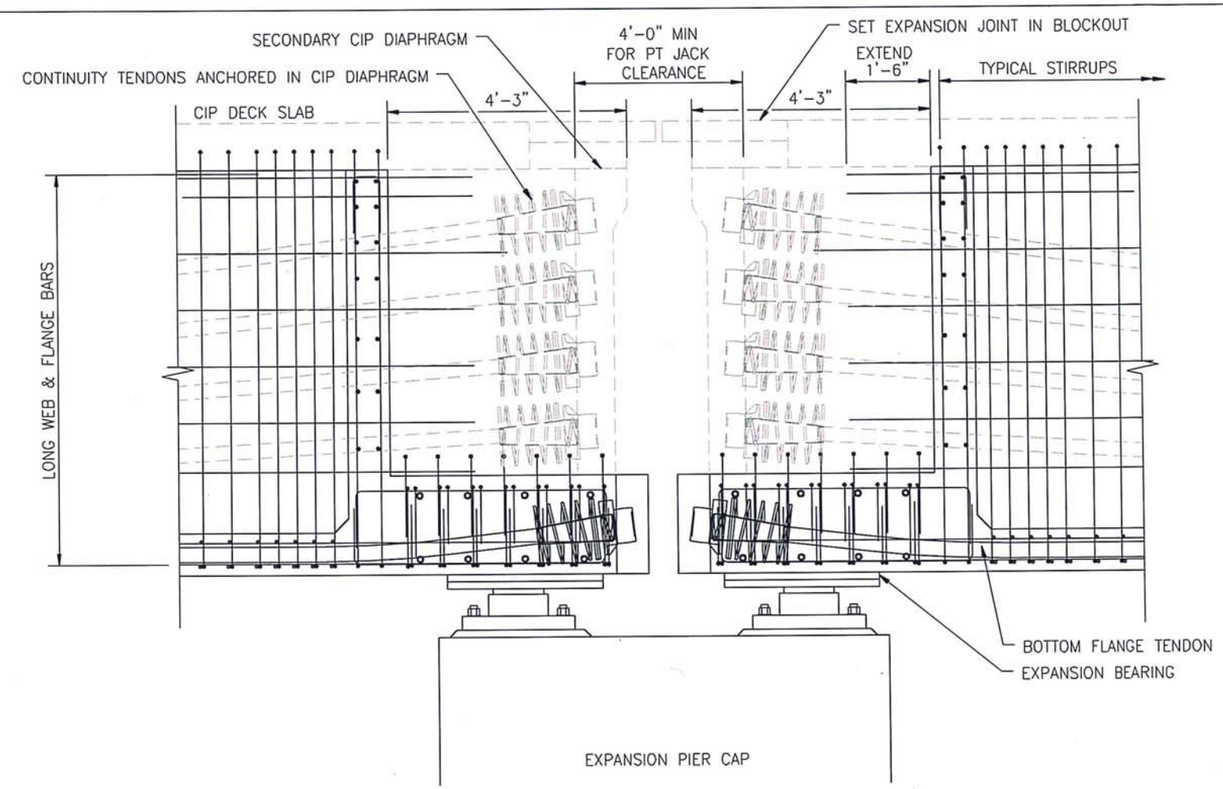

ELEVATION @ EXPANSION PIER

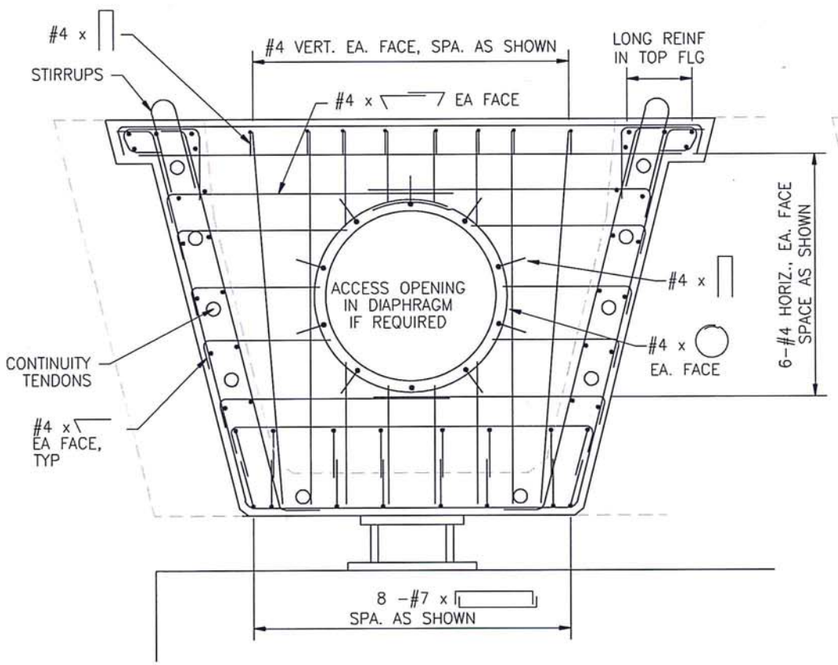

SECTION VIEW – DIAPHRAGM

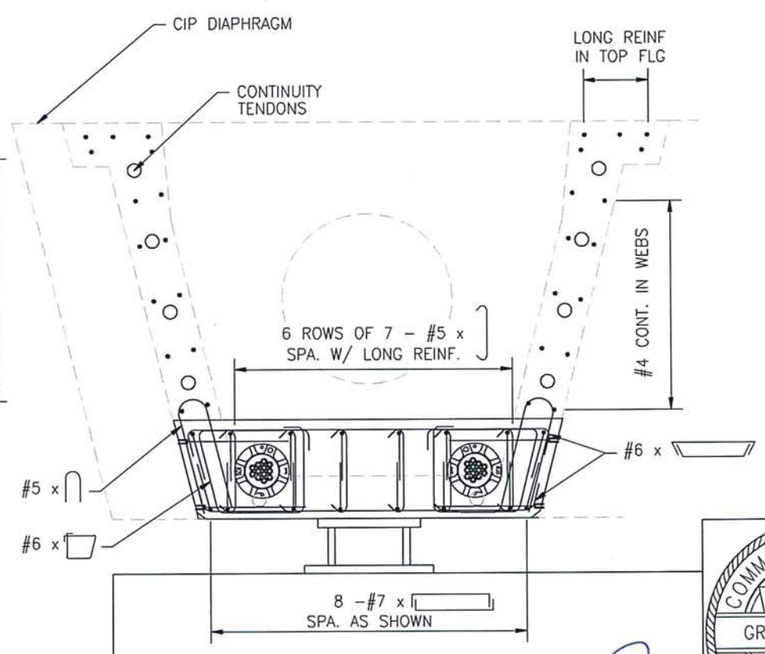

SECTION VIEW @ NOTCH

NOTES

1. INFORMATION SHOWN ON THIS DRAWING IS INTENDED TO ILLUSTRATE A WORKING CONCEPT FOR SPLICED U-GIRDERS.
2. ALL CONCRETE DIMENSIONS AND REINFORCEMENT SHOWN ARE FOR ILLUSTRATION PURPOSES ONLY.

5/31/2016

PENNDOT DRAWING 15-601-BDTD

COMMONWEALTH OF PENNSYLVANIA
REGISTERED PROFESSIONAL
GREGG A. REESE
ENGINEER
No. 044122R

5/20/16

CENTRAL ATLANTIC BRIDGE ASSOCIATES (CABA)	Summit Consulting Structural Engineers — 10822 W. TOLLER DRIVE, STE 330 LITTLETON, CO 80127 P: 303-933-9114 www.summit-eng-group.com
COMMONWEALTH OF PENNSYLVANIA DEPARTMENT OF TRANSPORTATION	DATE:
	SCALE
SPLICED POST-TENSIONED CONCRETE U-GIRDER STANDARDS	DWN: CH'D:
	JOB NO.
TYPICAL DETAILS 3 EXPANSION END DETAILS	SHEET NO. 8

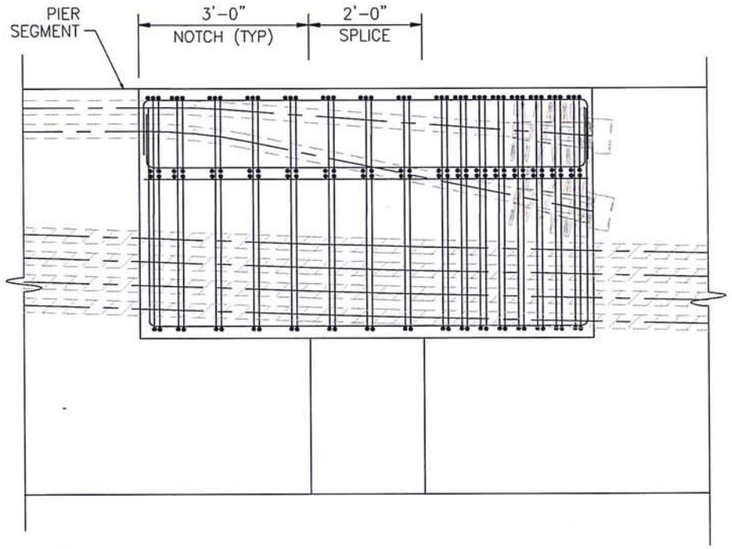

PIER PT ANCHOR/PARTIAL CONT ANCHOR BLOCKOUT ELEVATION

THIS DETAIL SHALL BE USED WHEN PIER AND/OR CONTINUITY PT MUST BE STRESSED AFTER ADJACENT SEGMENTS HAVE BEEN ERECTED.

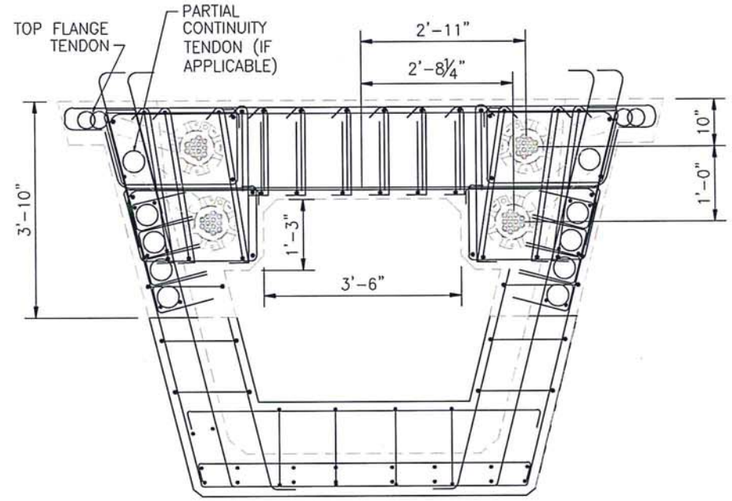

SECTION @ SPLICES 2 AND 6 – ANCHOR BLOCK

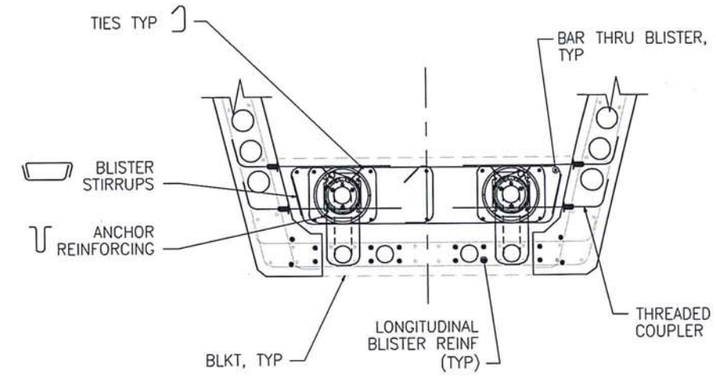

ANCHOR BLISTER DETAIL FOR MAIN SPAN BOTTOM SLAB TENDON

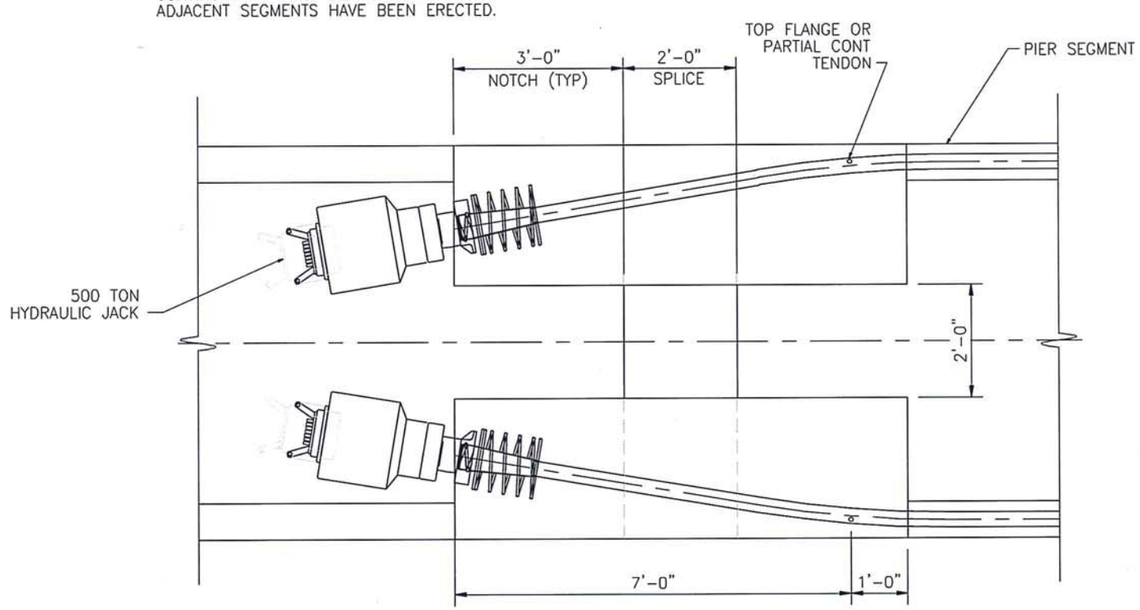

PLAN VIEW – PIER PT ANCHOR/ PARTIAL CONT ANCHOR BLOCKOUT

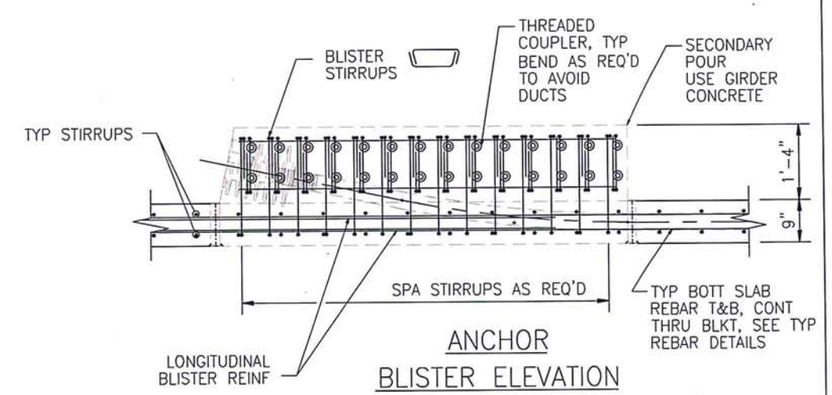

ANCHOR BLISTER ELEVATION

PENNDOT DRAWING 15-601-BDTD

NOTES

1. INFORMATION SHOWN ON THIS DRAWING IS INTENDED TO ILLUSTRATE A WORKING CONCEPT FOR SPLICED U-GIRDERS.
2. ALL CONCRETE DIMENSIONS AND REINFORCEMENT SHOWN ARE FOR ILLUSTRATION PURPOSES ONLY.

5/31/2016

5/20/16

COMMONWEALTH OF PENNSYLVANIA
REGISTERED PROFESSIONAL
GREGG A. REESE
ENGINEER
No. 044122R

CENTRAL ATLANTIC BRIDGE ASSOCIATES (CABA)	Summit Engineering Group, Incorporated Consulting Structural Engineers — 10822 W. TOLLER DRIVE, STE 330 LITTLETON, CO 80127 P: 303-933-9114 www.summit-eng-group.com	
COMMONWEALTH OF PENNSYLVANIA DEPARTMENT OF TRANSPORTATION	DATE:	
	SCALE	
SPLICED POST-TENSIONED CONCRETE U-GIRDER STANDARDS	DWN:	CH'D:
	JOB NO.	
ANCHORAGE BLOCKOUT DETAILS	SHEET NO. 9	

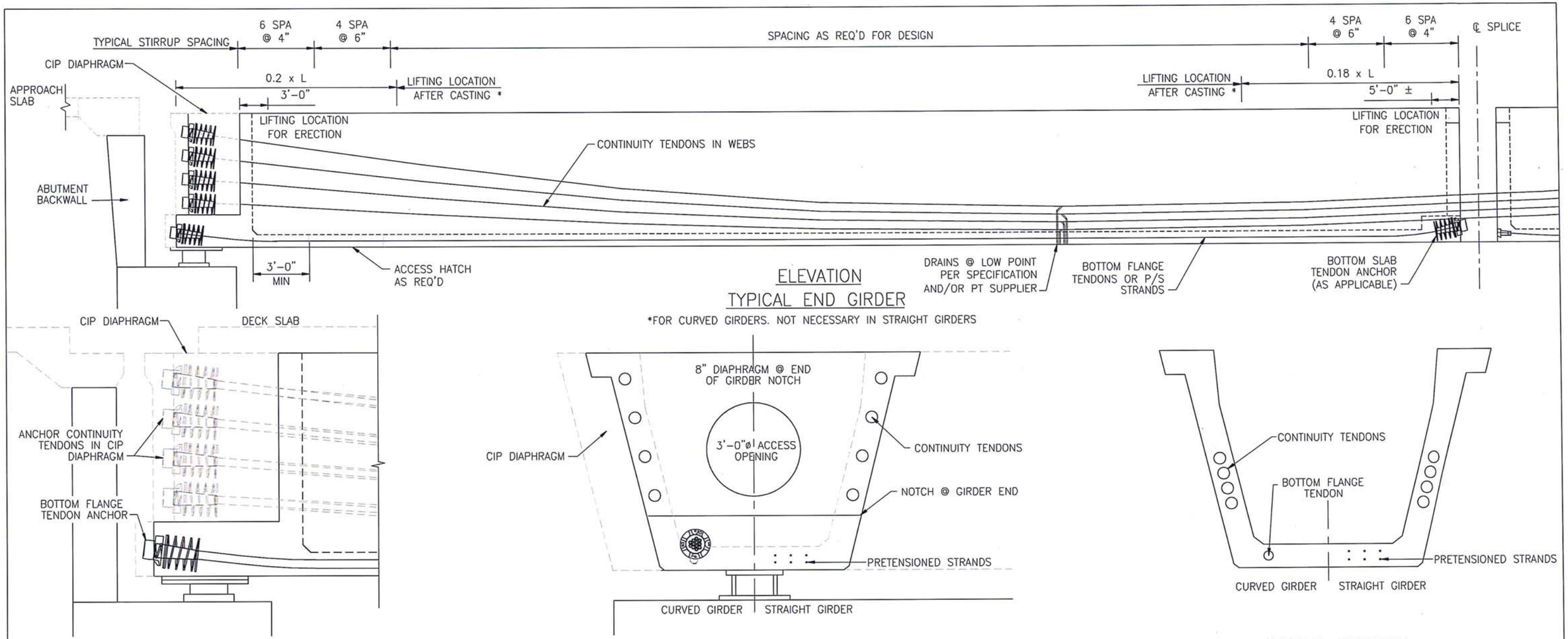

ELEVATION
TYPICAL END GIRDER

*FOR CURVED GIRDERS. NOT NECESSARY IN STRAIGHT GIRDERS

ELEVATION

SECTION VIEW – END OF GIRDER

TYPICAL SECTION

GIRDER DETAILS – NOTCHED END @ ABUTMENT

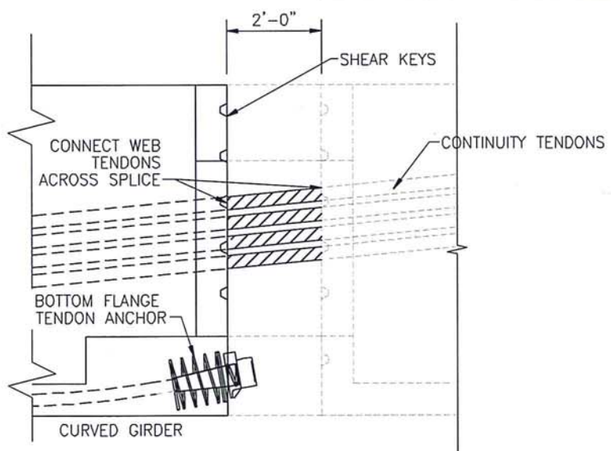

SECTION VIEW

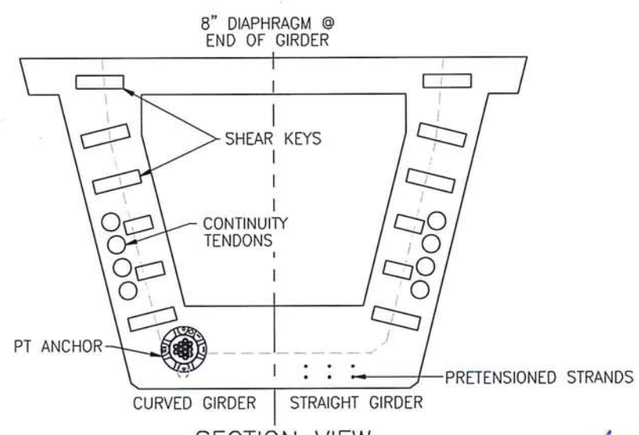

SECTION VIEW

GIRDER DETAILS – SPLICED END

NOTES

1. INFORMATION SHOWN ON THIS DRAWING IS INTENDED TO ILLUSTRATE A WORKING CONCEPT FOR SPLICED U-GIRDERS.
2. ALL CONCRETE DIMENSIONS AND REINFORCEMENT SHOWN ARE FOR ILLUSTRATION PURPOSES ONLY.
3. DETAILS FOR BOTH CURVED AND STRAIGHT GIRDERS ARE SHOWN.
4. CURVED AND STRAIGHT GIRDERS MAY BE USED INTERCHANGEABLY WITHIN ANY SPAN TO ACCOMODATE ROADWAY ALIGNMENT.

PENNDOT DRAWING 15-601-BDTD

5/31/2016

COMMONWEALTH OF PENNSYLVANIA
REGISTERED PROFESSIONAL
GREGG A. REESE
ENGINEER
No. 044122R

5/20/16

CENTRAL ATLANTIC BRIDGE ASSOCIATES (CABA)	Summit Engineering Group, Incorporated Consulting Structural Engineers 10822 W. Toller Drive, Ste 330 Littleton, CO 80127 P: 303-933-9114 www.summit-eng-group.com	
COMMONWEALTH OF PENNSYLVANIA DEPARTMENT OF TRANSPORTATION	DATE:	
	SCALE	
SPLICED POST-TENSIONED CONCRETE U-GIRDER STANDARDS	DWN:	CH'D:
	JOB NO.	
PRECAST GIRDER DETAILS 1 END GIRDER	SHEET NO. 10	

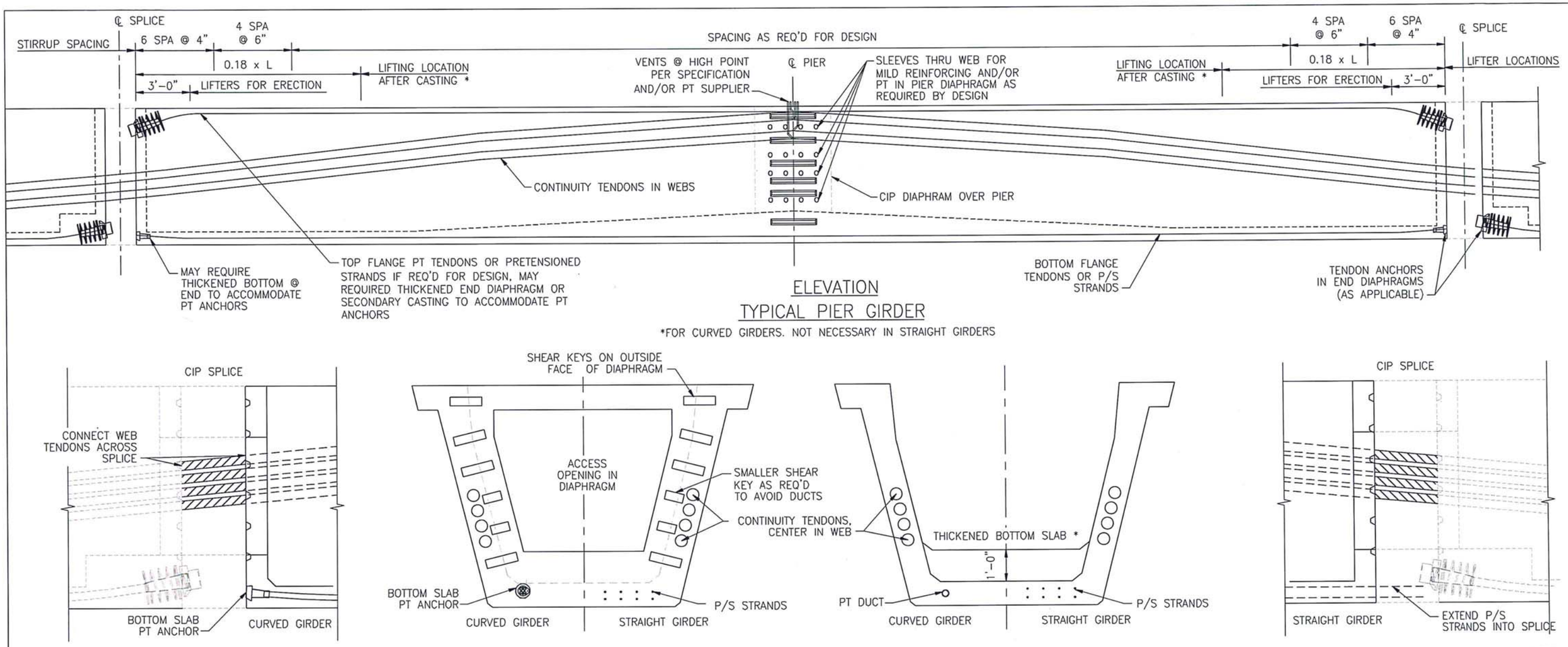

ELEVATION

TYPICAL PIER GIRDER

*FOR CURVED GIRDERS. NOT NECESSARY IN STRAIGHT GIRDERS

SPLICE @ DS END OF GIRDER

END DIAPHRAGM SECTION

TYPICAL GIRDER SECTION

DETAILS SHOW THICKENED BOTTOM FLANGE CAST MONOLITHICALLY w/ GIRDER. MAY BE CAST AS SECONDARY POUR PROVIDED REINFORCING IS DESIGNED/APPROVED BY EOR.

SPLICE @ US END OF GIRDER

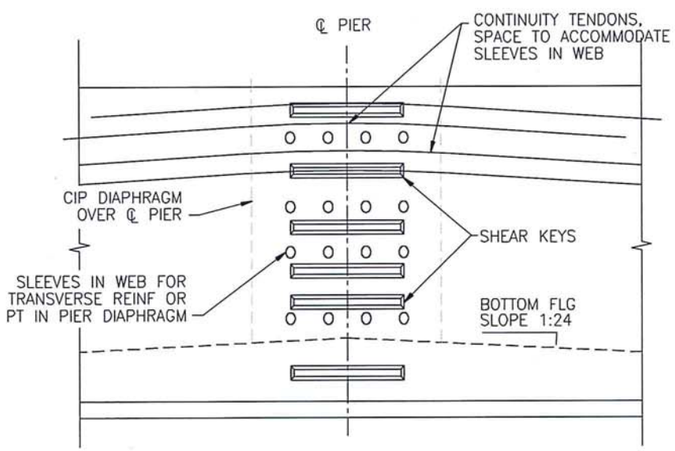

ELEVATION VIEW

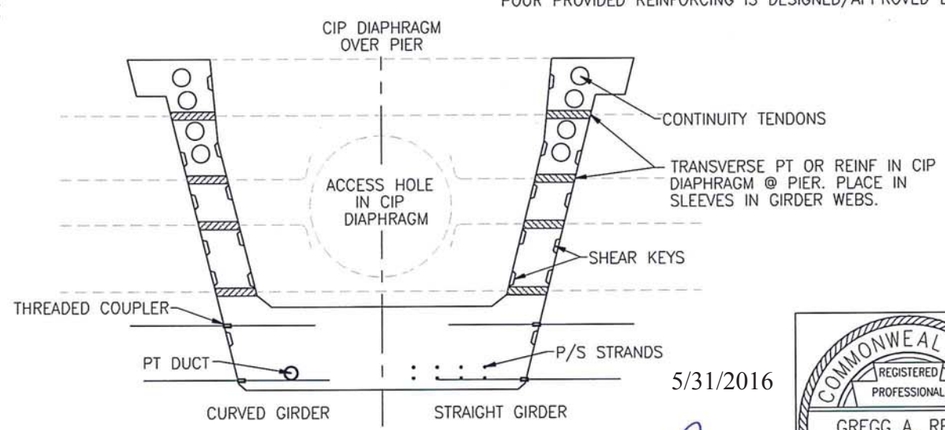

SECTION VIEW

GIRDER DETAILS @ ℄ PIER

NOTES

1. INFORMATION SHOWN ON THIS DRAWING IS INTENDED TO ILLUSTRATE A WORKING CONCEPT FOR SPLICED U-GIRDERS.
2. ALL CONCRETE DIMENSIONS AND REINFORCEMENT SHOWN ARE FOR ILLUSTRATION PURPOSES ONLY.
3. DETAILS FOR BOTH CURVED AND STRAIGHT GIRDERS ARE SHOWN.
4. CURVED AND STRAIGHT GIRDERS MAY BE USED INTERCHANGEABLY WITHIN ANY SPAN TO ACCOMODATE ROADWAY ALIGNMENT.

PENNDOT DRAWING 15-601-BDTD

5/31/2016

5/20/16

COMMONWEALTH OF PENNSYLVANIA
REGISTERED PROFESSIONAL
GREGG A. REESE
ENGINEER
No. 044122R

CENTRAL ATLANTIC BRIDGE ASSOCIATES (CABA)	Summit Engineering Group, Incorporated — Consulting Structural Engineers — 10822 W. Toller Drive, Ste 330, Littleton, CO 80127, P: 303-933-9114, www.summit-eng-group.com
COMMONWEALTH OF PENNSYLVANIA DEPARTMENT OF TRANSPORTATION	DATE:
	SCALE
SPLICED POST-TENSIONED CONCRETE U-GIRDER STANDARDS	DWN: / CH'D:
	JOB NO.
PRECAST GIRDER DETAILS 2 PIER GIRDERS	SHEET NO. 11

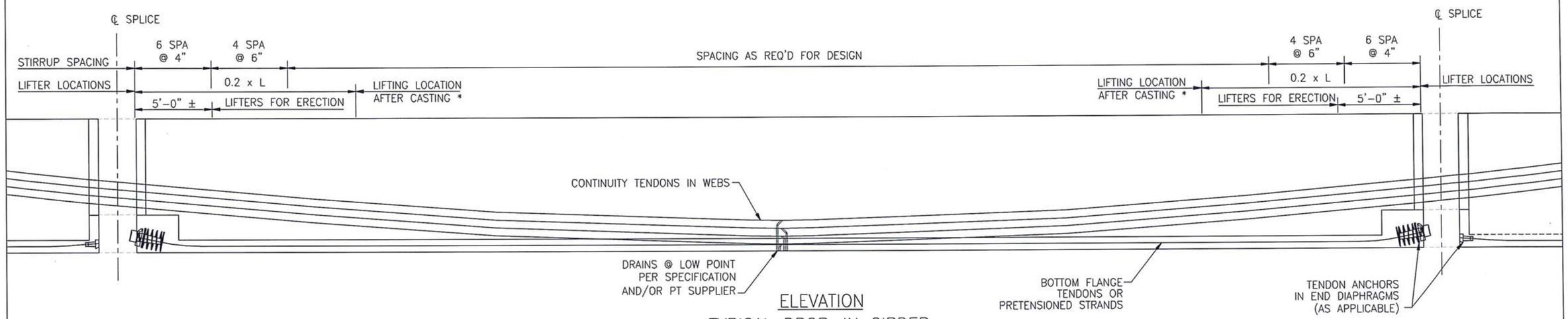

ELEVATION

TYPICAL DROP-IN GIRDER

* FOR CURVED GIRDERS. NOT NECESSARY IN STRAIGHT GIRDERS

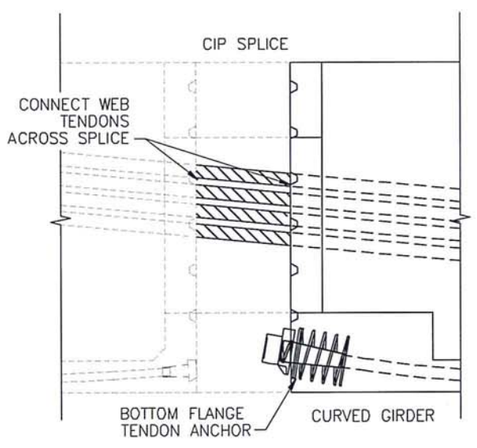

SPLICE @ DS END OF GIRDER

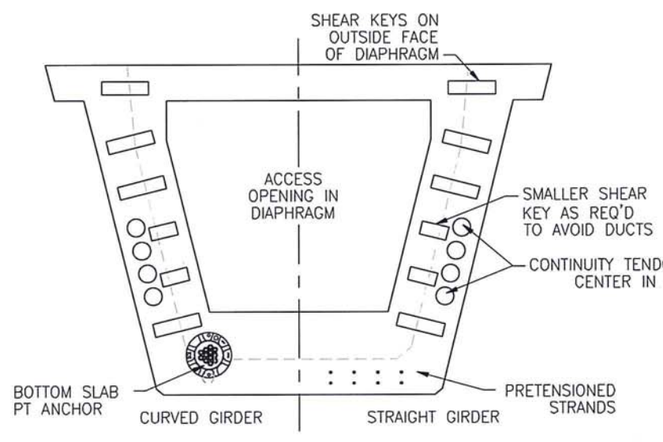

END DIAPHRAGM SECTION

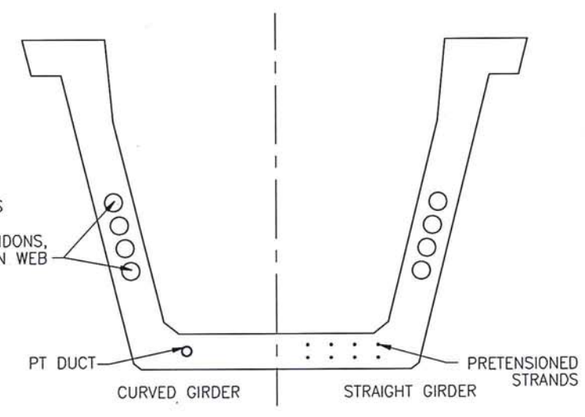

TYPICAL GIRDER SECTION

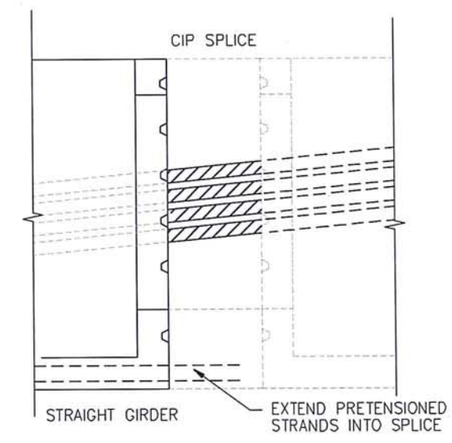

SPLICE @ US END OF GIRDER

NOTES

1. INFORMATION SHOWN ON THIS DRAWING IS INTENDED TO ILLUSTRATE A WORKING CONCEPT FOR SPLICED U-GIRDERS.
2. ALL CONCRETE DIMENSIONS AND REINFORCEMENT SHOWN ARE FOR ILLUSTRATION PURPOSES ONLY.
3. DETAILS FOR BOTH CURVED AND STRAIGHT GIRDERS ARE SHOWN.
4. CURVED AND STRAIGHT GIRDERS MAY BE USED INTERCHANGEABLY WITHIN ANY SPAN TO ACCOMODATE ROADWAY ALIGNMENT.

5/31/2016

COMMONWEALTH OF PENNSYLVANIA
REGISTERED PROFESSIONAL
GREGG A. REESE
ENGINEER
No. 044122R

5/20/16

PENNDOT DRAWING 15-601-BDTD

CENTRAL ATLANTIC BRIDGE ASSOCIATES (CABA)	Summit Engineering Group, Incorporated Consulting Structural Engineers — 10822 W. Toller Drive, Ste 330 Littleton, CO 80127 P: 303-933-9114 www.summit-eng-group.com	
COMMONWEALTH OF PENNSYLVANIA DEPARTMENT OF TRANSPORTATION	DATE:	
	SCALE	
SPLICED POST-TENSIONED CONCRETE U-GIRDER STANDARDS	DWN:	CH'D:
	JOB NO.	
PRECAST GIRDER DETAILS 3 DROP IN GIRDERS	SHEET NO. 12	

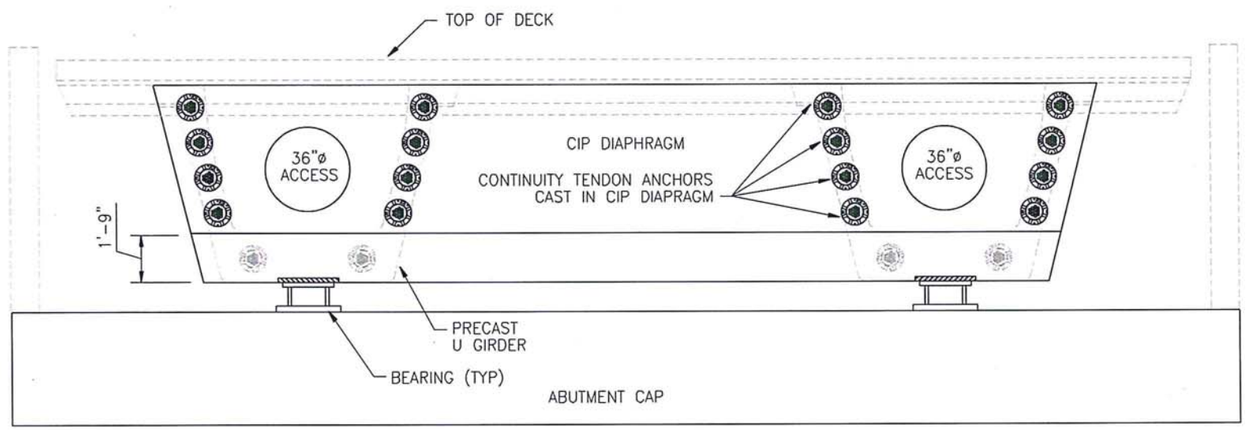

ELEVATION @ ABUTMENT

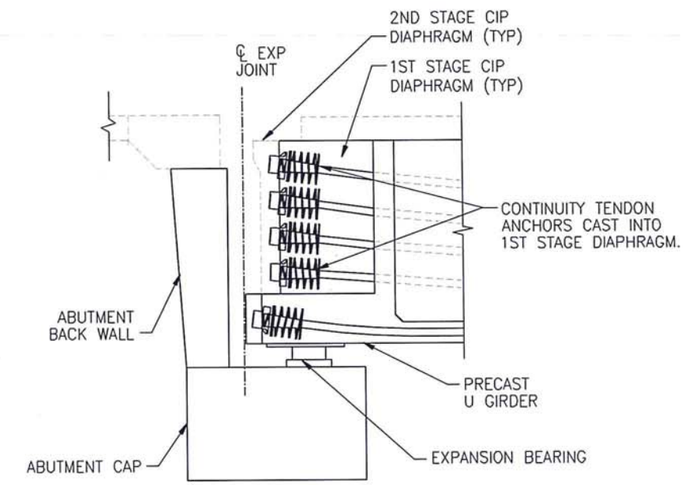

SECTION @ ABUTMENT

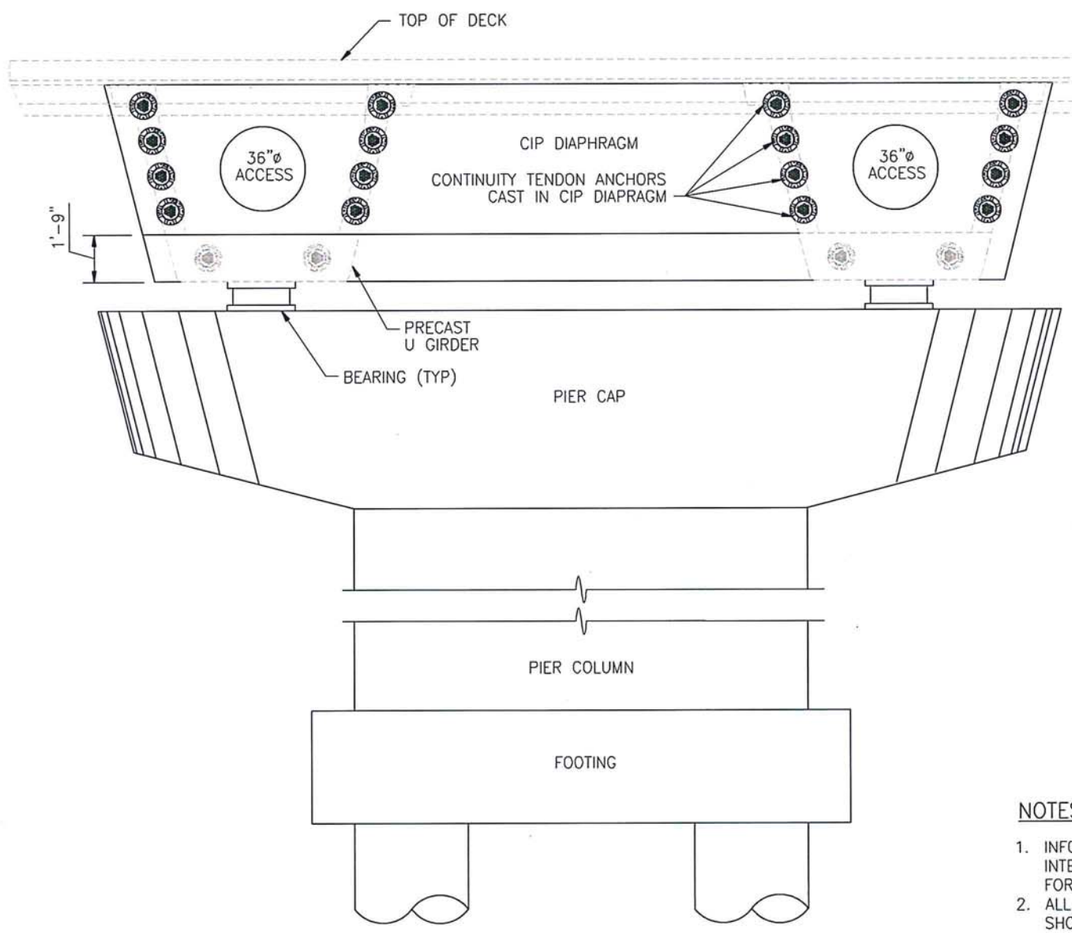

ELEVATION @ EXPANSION PIER

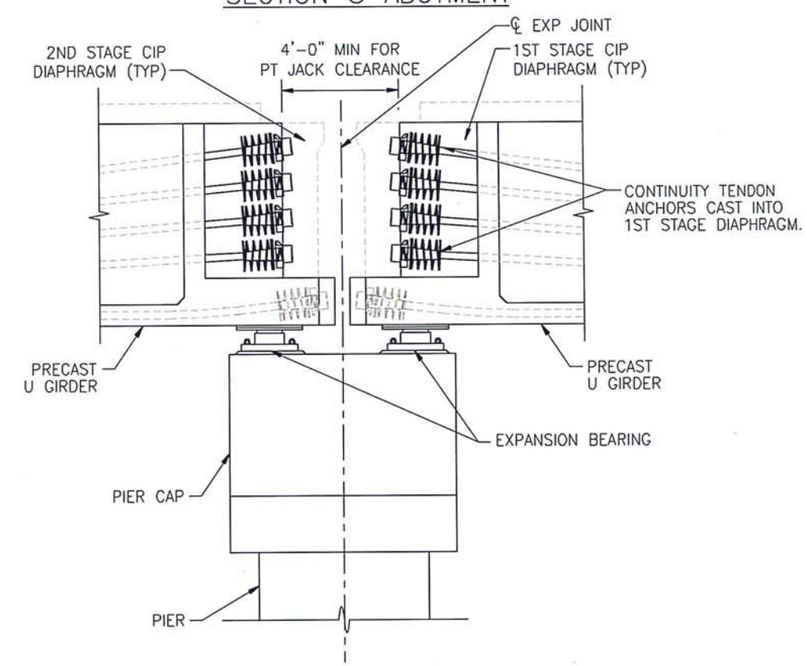

SECTION @ EXPANSION PIER

NOTES

1. INFORMATION SHOWN ON THIS DRAWING IS INTENDED TO ILLUSTRATE A WORKING CONCEPT FOR SPLICED U-GIRDERS.
2. ALL CONCRETE DIMENSIONS AND REINFORCEMENT SHOWN ARE FOR ILLUSTRATION PURPOSES ONLY.

5/31/2016

PENNDOT DRAWING 15-601-BDTD

COMMONWEALTH OF PENNSYLVANIA
REGISTERED PROFESSIONAL
GREGG A. REESE
ENGINEER
No. 044122R

5/20/16

CENTRAL ATLANTIC BRIDGE ASSOCIATES (CABA)	Summit Engineering Group, Incorporated Consulting Structural Engineers, 10822 W. Toller Drive, Ste 330, Littleton, CO 80127, P: 303-933-9114, www.summit-eng-group.com	
COMMONWEALTH OF PENNSYLVANIA DEPARTMENT OF TRANSPORTATION	DATE:	
	SCALE	
SPLICED POST-TENSIONED CONCRETE U-GIRDER STANDARDS	DWN:	CH'D:
	JOB NO.	
SUBSTRUCTURE DETAILS 1 EXPANSION PIERS AND ABUTMENTS	SHEET NO. 13	

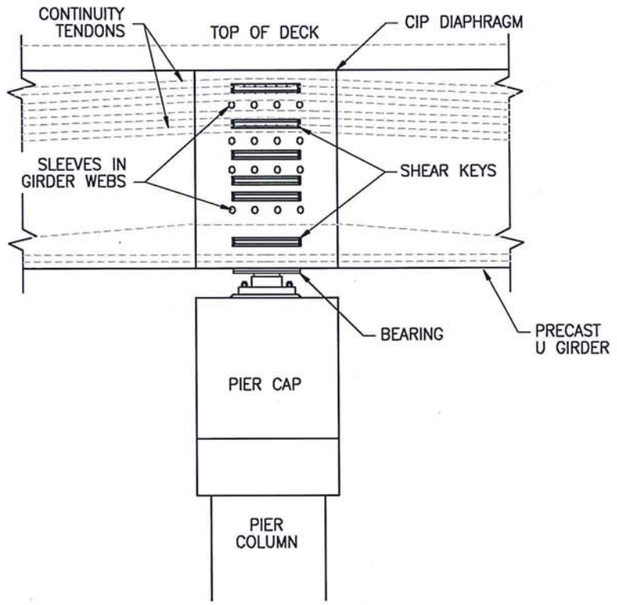

SECTION @ PIER w/ BEARINGS

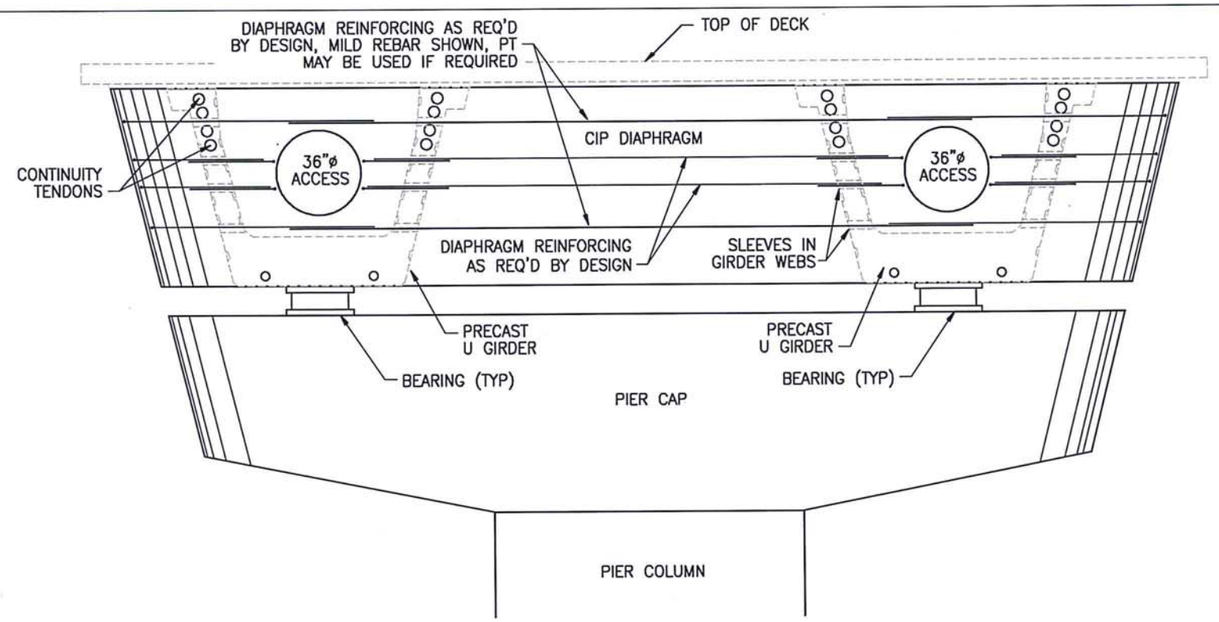

ELEVATION @ PIER w/ BEARINGS

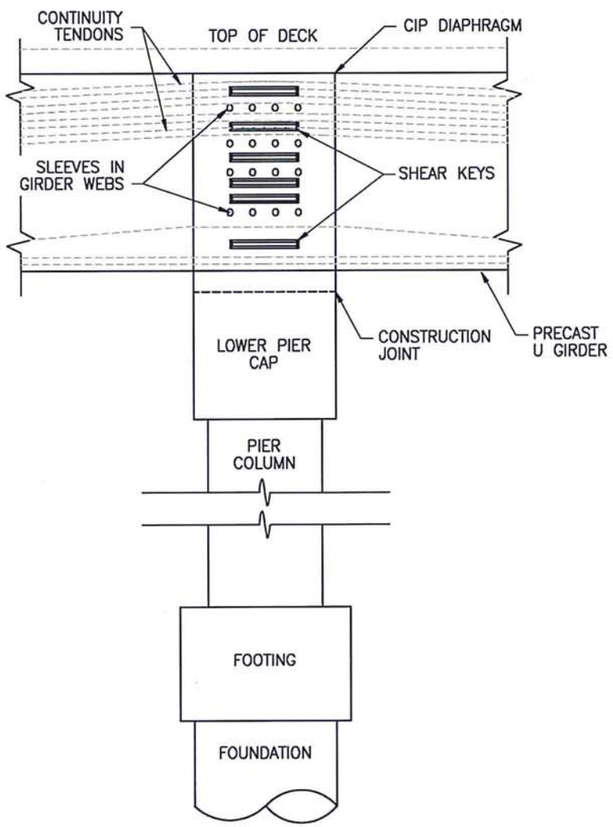

SECTION @ INTEGRAL PIER

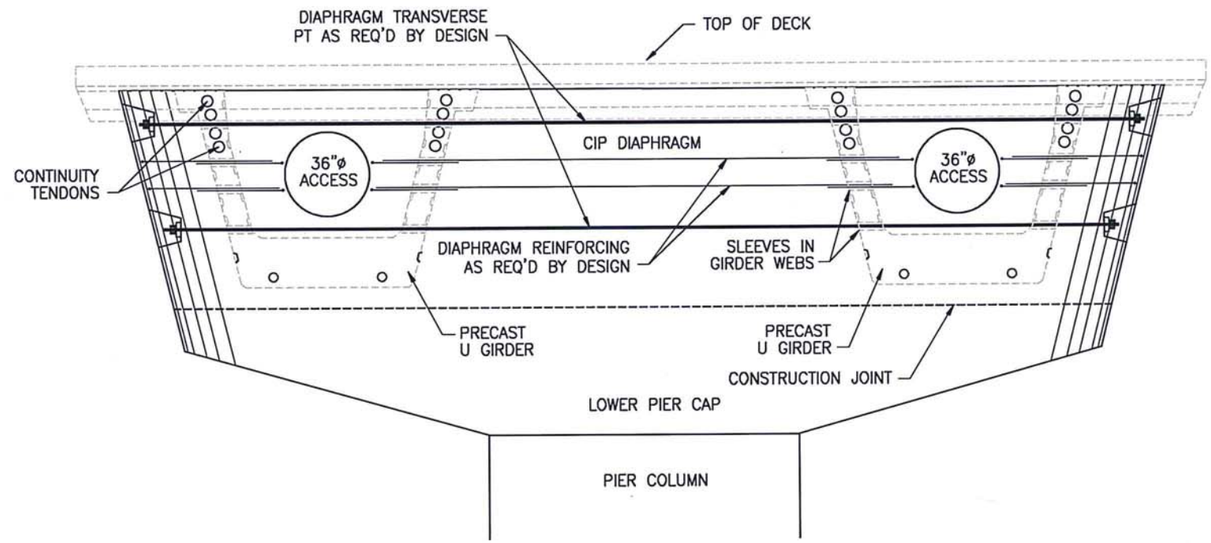

ELEVATION @ INTEGRAL PIER

5/31/2016

PENNDOT DRAWING 15-601-BDTD

NOTES

1. INFORMATION SHOWN ON THIS DRAWING IS INTENDED TO ILLUSTRATE A WORKING CONCEPT FOR SPLICED U-GIRDERS.
2. ALL CONCRETE DIMENSIONS AND REINFORCEMENT SHOWN ARE FOR ILLUSTRATION PURPOSES ONLY.

COMMONWEALTH OF PENNSYLVANIA
REGISTERED PROFESSIONAL
GREGG A. REESE
ENGINEER
No. 044122R

5/20/16

CENTRAL ATLANTIC BRIDGE ASSOCIATES (CABA)	Summit Consulting Structural Engineers 10622 W. TOLLER DRIVE, STE 330 LITTLETON, CO 80127 P: 303-933-9114 www.summit-eng-group.com	
COMMONWEALTH OF PENNSYLVANIA DEPARTMENT OF TRANSPORTATION	DATE:	
	SCALE	
SPLICED POST-TENSIONED CONCRETE U-GIRDER STANDARDS	DWN:	CH'D:
	JOB NO.	
SUBSTRUCTURE DETAILS 2 INTERIOR PIERS	SHEET NO. 14	

PHASE 1 NOTES

1. CONSTRUCT FOUNDATIONS, ABUTMENTS, AND PIERS.
2. PRECAST GIRDERS. STRESS AND GROUT BOTTOM FLANGE PT (IF APPLICABLE).
3. ERECT SHORING TOWERS.

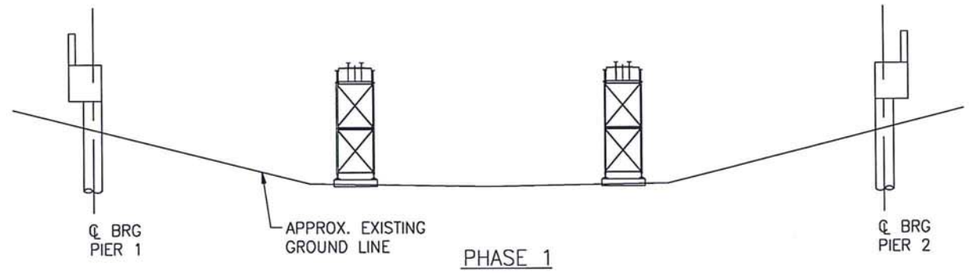

PHASE 1

PHASE 2 NOTES

1. ERECT GIRDER SEGMENTS.
2. BRACE CURVED SEGMENTS BEFORE RELEASING THE FULL WEIGHT ONTO SHORING.
3. CAST ALL CLOSURES AND STAGE 1 OF END DIAPHRAGMS.
4. FORM & CAST LID SLABS OVER CURVED GIRDERS. LID SLABS NOT REQUIRED FOR STRAIGHT GIRDERS.

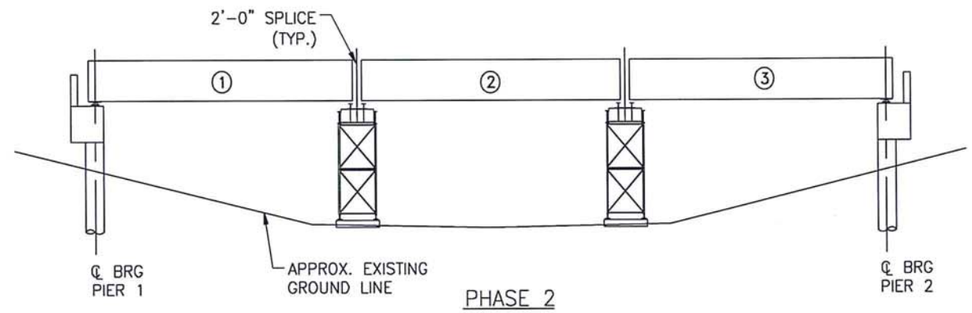

PHASE 2

PHASE 3 NOTES

1. STRESS CONTINUITY TENDONS.
2. GROUT TENDONS.
3. CAST STAGE 2 OF END DIAPHRAGMS.

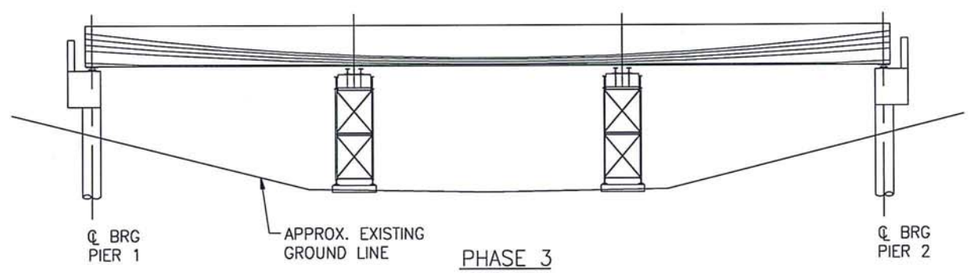

PHASE 3

PHASE 4 NOTES

1. REMOVE ALL SHORING TOWERS.
2. CAST DECK SLAB.
3. CAST APPROACH SLABS AND BRIDGE RAIL.
4. INSTALL EXPANSION JOINTS.

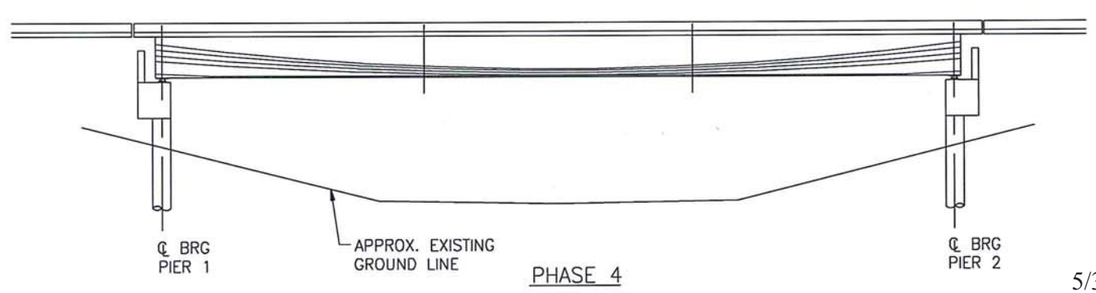

PHASE 4

NOTES

1. INFORMATION SHOWN ON THIS DRAWING IS INTENDED TO ILLUSTRATE A WORKING CONCEPT FOR SPLICED U-GIRDERS.
2. ALL CONCRETE DIMENSIONS AND REINFORCEMENT SHOWN ARE FOR ILLUSTRATION PURPOSES ONLY.
3. TOWER LOCATIONS AND REACTIONS MUST BE INCLUDED IN THE PLANS.

5/20/16

5/31/2016

PENNDOT DRAWING 15-601-BDTD

COMMONWEALTH OF PENNSYLVANIA
REGISTERED PROFESSIONAL
GREGG A. REESE
ENGINEER
No. 044122R

CENTRAL ATLANTIC BRIDGE ASSOCIATES (CABA)	Summit Engineering Group, Incorporated Consulting Structural Engineers — 10822 W. TOLLER DRIVE, STE 330 LITTLETON, CO 80127 P: 303-933-9114 www.summit-eng-group.com	
COMMONWEALTH OF PENNSYLVANIA DEPARTMENT OF TRANSPORTATION	DATE:	
	SCALE	
SPLICED POST-TENSIONED CONCRETE U-GIRDER STANDARDS	DWN:	CH'D:
	JOB NO.	
ERECTION SCHEMATICS 1 SINGLE SPAN UNIT - CONSTANT DEPTH	SHEET NO. 15	

PHASE 1 NOTES

1. CONSTRUCT FOUNDATIONS, ABUTMENTS, AND PIERS.
2. PRECAST GIRDERS. STRESS AND GROUT BOTTOM FLANGE PT (IF APPLICABLE).
3. ERECT SHORING TOWERS.

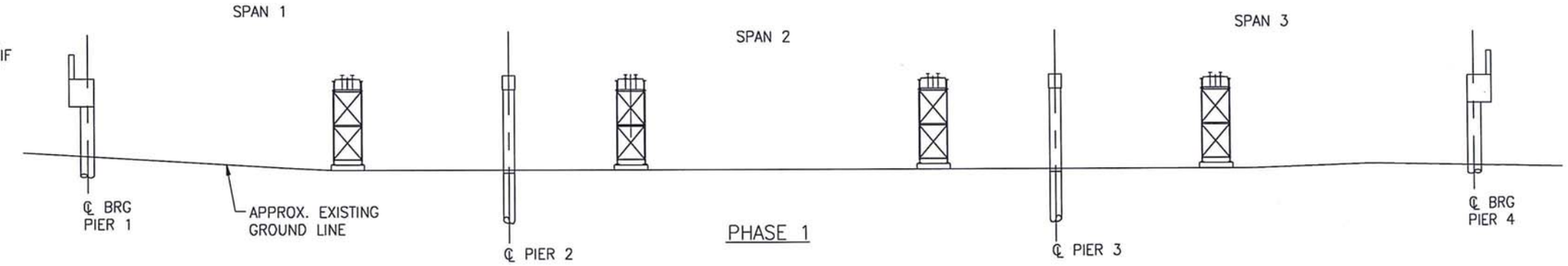

PHASE 2 NOTES

1. ERECT GIRDER SEGMENTS, SUPPORTING EACH END ON SHORING. PIER GIRDERS SHALL NOT BE SUPPORTED ON INTERIOR PIERS AT THIS PHASE.
2. BRACE CURVED SEGMENTS BEFORE RELEASING THE FULL WEIGHT ONTO SHORING.
3. CAST ALL CLOSURES.
4. CAST DIAPHRAGMS OVER INTERIOR PIERS.
5. CAST STAGE 1 OF DIAPHRAGMS AT EXPANSION PIERS/ABUTMENTS.
6. STRESS TRANSVERSE POST TENSIONING TENDONS IN PIER DIAPHRAGMS.
7. GROUT ALL TRANSVERSE TENDONS.
8. FORM & CAST LID SLABS OVER CURVED GIRDERS. LID SLABS NOT REQUIRED FOR STRAIGHT GIRDERS.

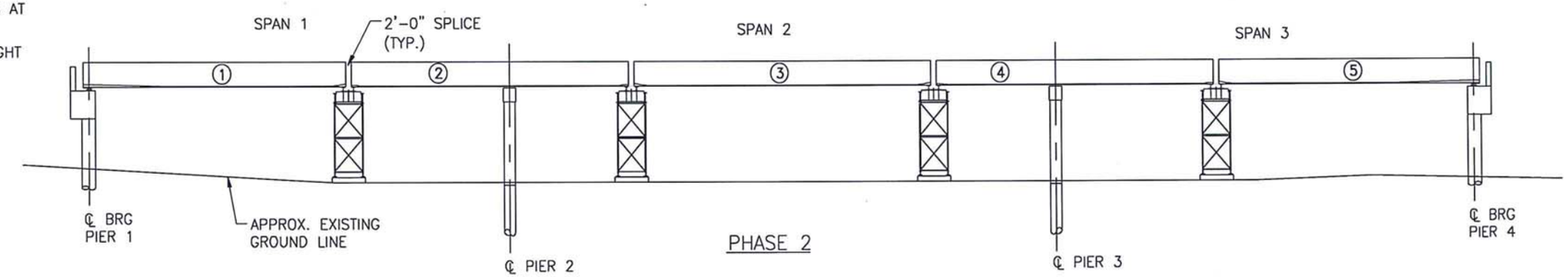

PHASE 3 NOTES

1. STRESS CONTINUITY TENDONS.
2. GROUT ALL CONTINUITY TENDONS.
3. CAST STAGE 2 DIAPHRAGMS AT EXPANSION PIERS/ABUTMENTS.

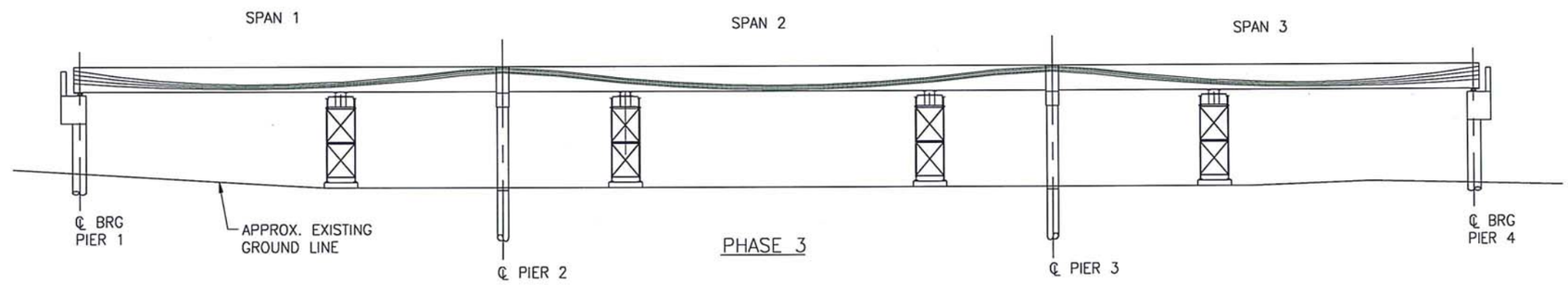

PHASE 4 NOTES

1. REMOVE ALL SHORING TOWERS.
2. CAST DECK SLAB.
3. CAST APPROACH SLABS AND BRIDGE RAIL.
4. INSTALL EXPANSION JOINTS.

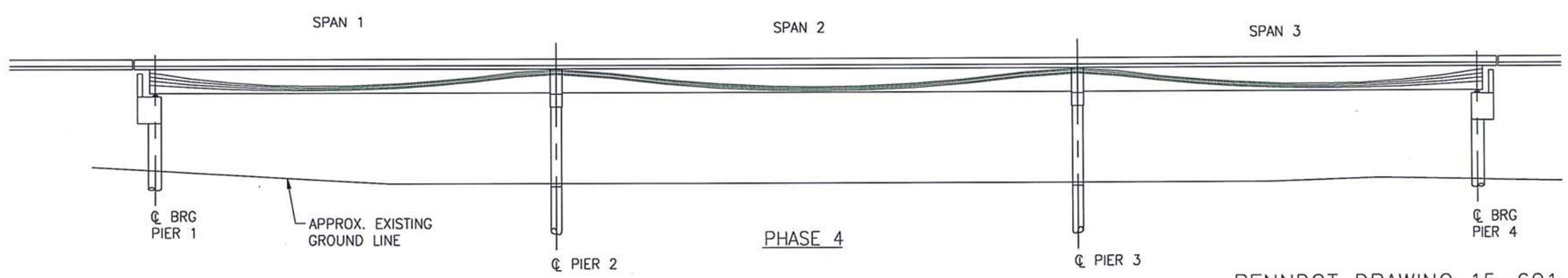

PENNDOT DRAWING 15-601-BDTD

NOTES

1. INFORMATION SHOWN ON THIS DRAWING IS INTENDED TO ILLUSTRATE A WORKING CONCEPT FOR SPLICED U-GIRDERS.
2. ALL CONCRETE DIMENSIONS AND REINFORCEMENT SHOWN ARE FOR ILLUSTRATION PURPOSES ONLY.
3. TOWER LOCATIONS AND REACTIONS MUST BE INCLUDED IN THE PLANS.

5/31/2016

5/20/16

COMMONWEALTH OF PENNSYLVANIA
REGISTERED PROFESSIONAL
GREGG A. REESE
ENGINEER
No. 044122R

CENTRAL ATLANTIC BRIDGE ASSOCIATES (CABA)	Summit Engineering Group, Incorporated Consulting Structural Engineers — 10822 W. TOLLER DRIVE, STE 330 LITTLETON, CO 80127 P: 303-933-9114 www.summit-eng-group.com
COMMONWEALTH OF PENNSYLVANIA DEPARTMENT OF TRANSPORTATION	DATE:
	SCALE
SPLICED POST-TENSIONED CONCRETE U-GIRDER STANDARDS	DWN: CH'D:
	JOB NO.
ERECTION SCHEMATICS 2 THREE SPAN UNIT - CONSTANT DEPTH	SHEET NO. 16

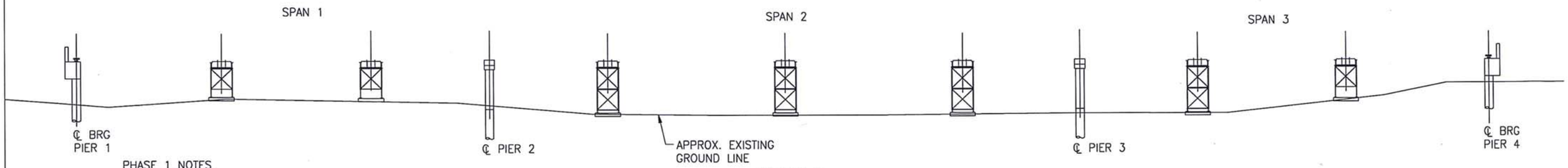

PHASE 1

PHASE 1 NOTES

1. CONSTRUCT FOUNDATIONS, ABUTMENTS, AND PIERS.
2. PRECAST GIRDERS. STRESS AND GROUT BOTTOM FLANGE PT (IF APPLICABLE).
3. ERECT SHORING TOWERS.

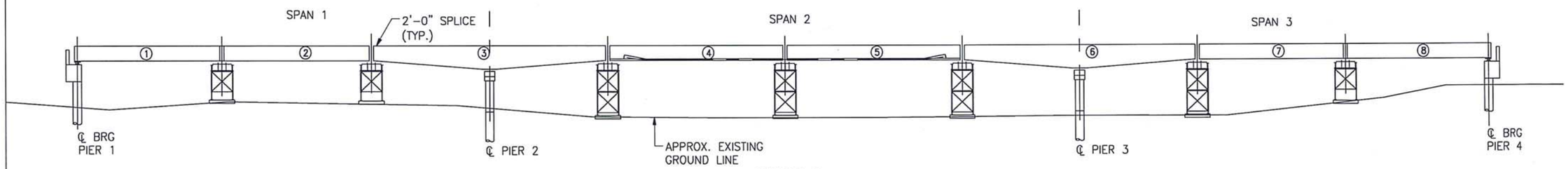

PHASE 2

PHASE 2 NOTES

1. ERECT GIRDER SEGMENTS OVER TEMPORARY SHORING. PIER GIRDERS SHALL NOT BE SUPPORTED ON INTERIOR PIERS AT THIS PHASE.
2. BRACE CURVED SEGMENTS PRIOR TO SETTING FULL WEIGHT ON SHORING
3. CAST CLOSURE BETWEEN DROP IN GIRDERS 4 & 5.
4. STRESS BOTTOM FLANGE TENDON TO CONNECT GIRDER 4 & 5.
5. CAST ALL OTHER CLOSURES.
6. CAST DIAPHRAGMS OVER INTERIOR PIERS.
7. CAST STAGE 1 OF DIAPHRAGMS AT EXPANSION PIERS/ABUTMENTS.
8. FORM & CAST LID SLABS OVER CURVED GIRDERS. LID SLABS NOT REQUIRED FOR STRAIGHT GIRDERS.

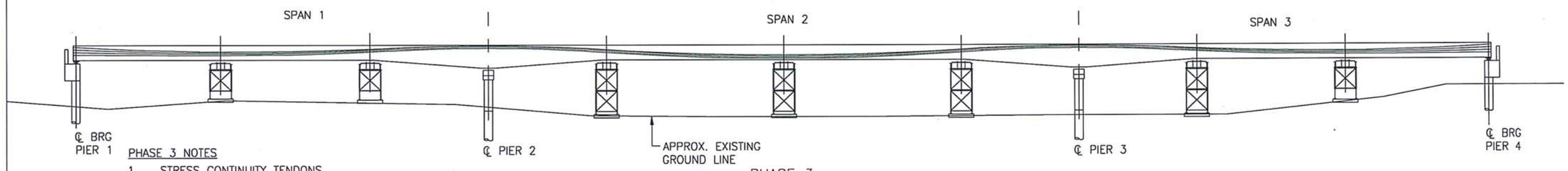

PHASE 3

PHASE 3 NOTES

1. STRESS CONTINUITY TENDONS.
2. GROUT ALL TENDONS
3. CAST STAGE 2 OF DIAPHRAGMS AT EXPANSION PIERS/ABUMTMENTS.

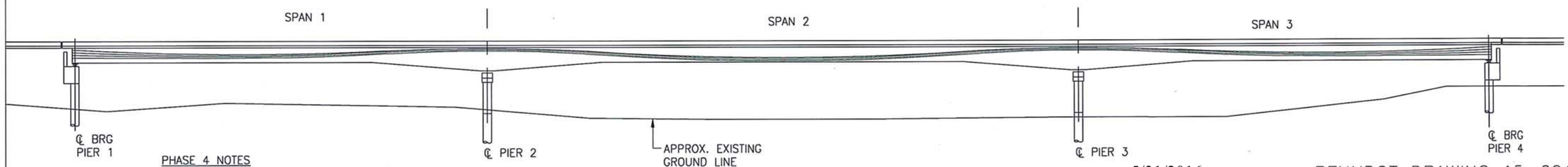

PHASE 4

PHASE 4 NOTES

1. REMOVE ALL SHORING TOWERS.
2. CAST DECK SLAB.
3. CAST APPROACH SLABS AND BRIDGE RAIL.
4. INSTALL EXPANSION JOINTS.

NOTES

1. INFORMATION SHOWN ON THIS DRAWING IS INTENDED TO ILLUSTRATE A WORKING CONCEPT FOR SPLICED U-GIRDERS.
2. ALL CONCRETE DIMENSIONS AND REINFORCEMENT SHOWN ARE FOR ILLUSTRATION PURPOSES ONLY.
3. TOWER LOCATIONS AND REACTIONS MUST BE INCLUDED IN THE PLANS.

5/31/2016

PENNDOT DRAWING 15-601-BDTD

COMMONWEALTH OF PENNSYLVANIA
REGISTERED PROFESSIONAL
GREGG A. REESE
ENGINEER
No. 044122R

5/20/16

CENTRAL ATLANTIC BRIDGE ASSOCIATES (CABA)	Summit Engineering Group, Incorporated Consulting Structural Engineers — 10822 W. TOLLER DRIVE, STE 330 LITTLETON, CO 80127 P: 303-933-9114 www.summit-eng-group.com	
COMMONWEALTH OF PENNSYLVANIA DEPARTMENT OF TRANSPORTATION	DATE:	
	SCALE	
SPLICED POST-TENSIONED CONCRETE U-GIRDER STANDARDS	DWN:	CH'D:
	JOB NO.	
ERECTION SCHEMATICS 3 THREE SPAN UNIT – VARIABLE DEPTH	SHEET NO. 17	

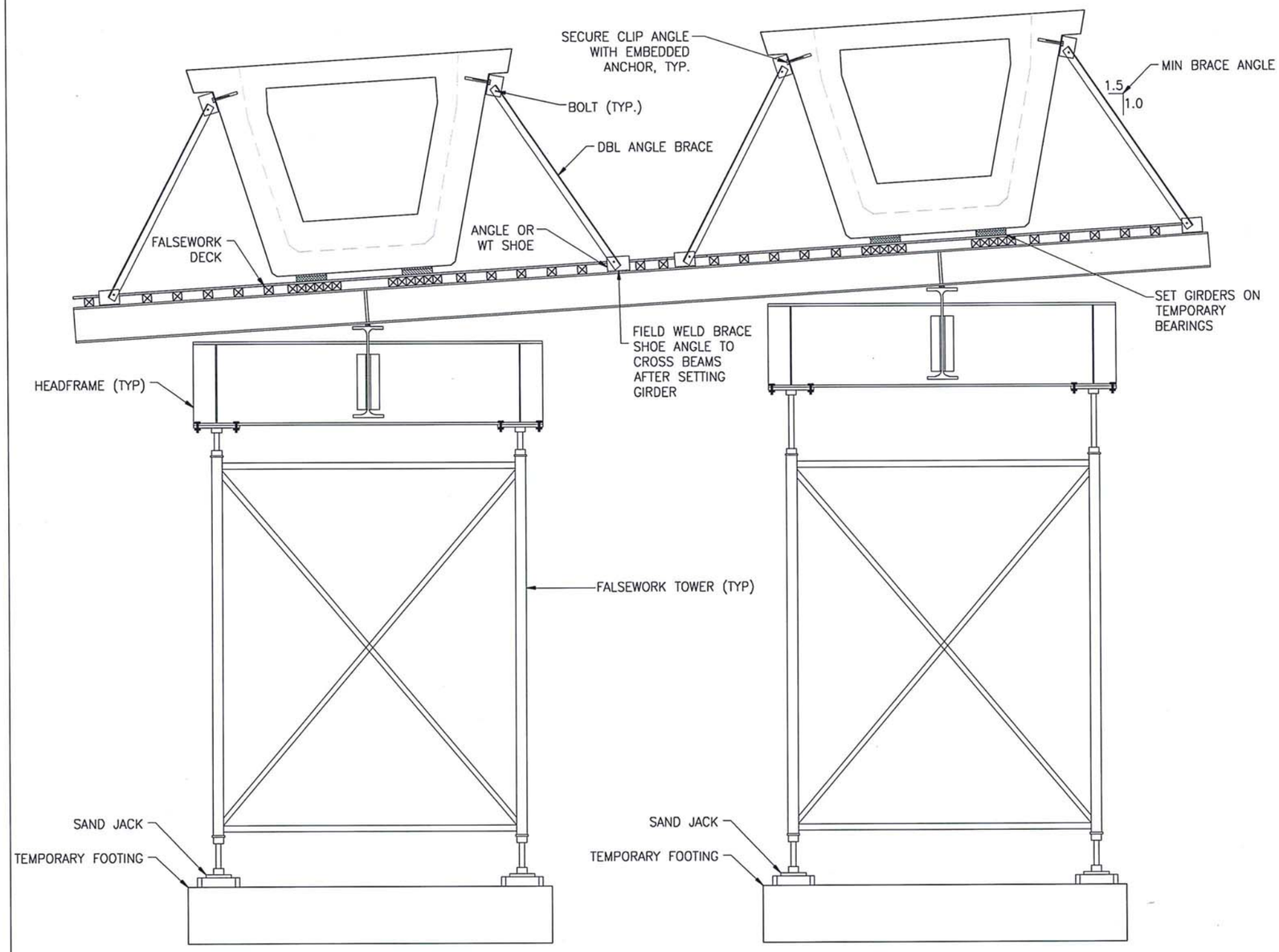

ERECTION BRACING AT ENDS OF PRECAST GIRDERS

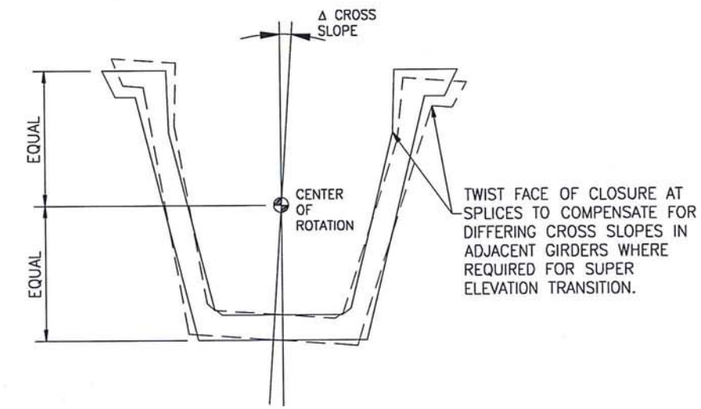

GEOMETRY CONTROL

1. GIRDERS ARE ASSUMED TO BE CAST FLAT IN A CONVENTIONAL PRECAST BED WITH NO COMPENSATION FOR VERTICAL CURVATURE OR CROSS FALL TRANSITION.
2. ADJUSTMENTS FOR VERTICAL CURVATURE AND CAMBER ARE ACCOMPLISHED BY ADJUSTING TEMPORARY BEARING ELEVATIONS ON THE SHORING.
3. ADJUSTMENTS FOR TRANSITION IN CROSS FALL ARE ACCOMPLISHED BY SETTING EACH GIRDER TO A UNIQUE CROSS SLOPE AND CASTING THE TRANSITION BETWEEN THE GIRDERS INTO THE SPLICES.
4. CURVED GIRDERS ARE CAST ALONG A SET CURVE AS DETAILED IN THE APPROVED SHOP DRAWINGS TO MATCH THE HORIZONTAL ALIGNMENT.
5. GIRDERS MAY ALSO BE KINKED AT SPLICES TO ACHIEVE THE DESIRED HORIZONTAL ALIGNMENT.
6. NO OTHER ADJUSTMENTS FOR BRIDGE GEOMETRY, OTHER THAN CASTING HORIZONTALLY CURVED GIRDERS, ARE ASSUMED THAT DIFFER FROM COMMON PRACTICE FOR PRECAST GIRDER FABRICATION.

NOTES:

1. THIS DRAWING IS INTENDED TO REPRESENT SUGGESTED METHODS FOR BRACING THE PRECAST GIRDERS DURING ERECTION TO RESIST ROLLING, PROVIDE STABILITY AND LIMIT TORSIONAL STRESSES AND DEFLECTIONS.
2. GIRDERS SHALL BE SUPPORTED AND TORSIONALLY BRACED ON FALSEWORK AT EACH END AT EACH SPLICE DURING ERECTION.
3. ALL GIRDERS SHALL BE BRACED AT EACH END PRIOR TO RELEASING ANY SIGNIFICANT LOAD FROM ERECTION EQUIPMENT TO PREVENT ROLLING.
4. BRACES AND ALL ASSOCIATED CONNECTIONS SHALL BE DESIGNED BY FALSEWORK ENGINEER.
5. SUPPORTING FALSEWORK SHALL BE DESIGNED TO PROVIDE ADEQUATE STIFFNESS UNDER BRACE LOADS TO PREVENT SIGNIFICANT DEFLECTIONS WHEN RELEASING GIRDERS.
6. INFORMATION SHOWN ON THIS DRAWING IS INTENDED TO ILLUSTRATE A WORKING CONCEPT FOR SPLICED U-GIRDERS.
7. ALL CONCRETE DIMENSIONS, AND SPACING & SIZES OF REINFORCEMENT, SHOWN ARE FOR ILLUSTRATION PURPOSES ONLY.

5/31/2016

PENNDOT DRAWING 15-601-BDTD

5/20/16

COMMONWEALTH OF PENNSYLVANIA
REGISTERED PROFESSIONAL
GREGG A. REESE
ENGINEER
No. 044122R

CENTRAL ATLANTIC BRIDGE ASSOCIATES (CABA)	Summit Engineering Group, Incorporated Consulting Structural Engineers — 10822 W. Toller Drive, Ste 330 Littleton, CO 80127 P: 303-933-9114 www.summit-eng-group.com	
COMMONWEALTH OF PENNSYLVANIA DEPARTMENT OF TRANSPORTATION	DATE:	
	SCALE	
SPLICED POST-TENSIONED CONCRETE U-GIRDER STANDARDS	DWN:	CH'D:
	JOB NO.	
CONSTRUCTION DETAILS 1 TEMPORARY SHORING AND GEOMETRY CONTROL	SHEET NO. 18	

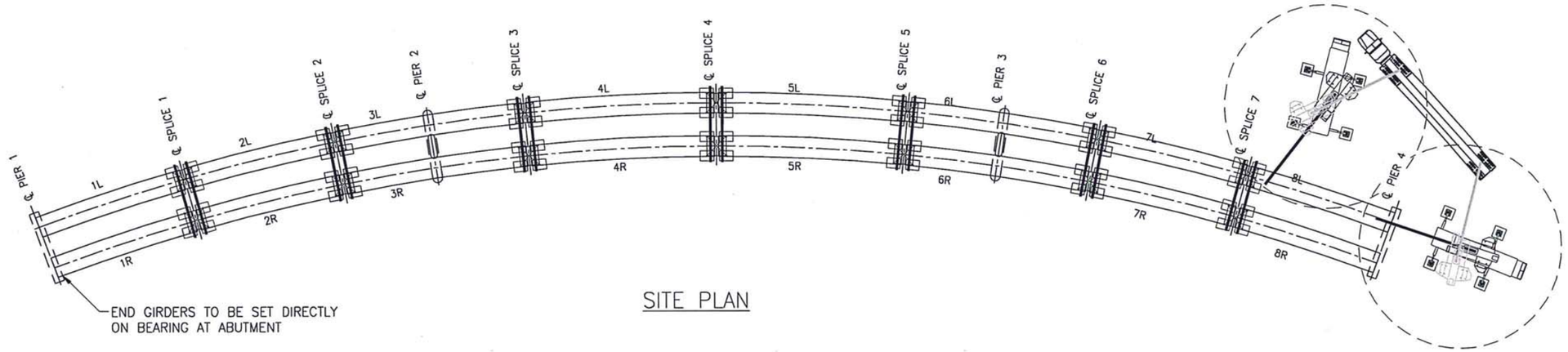

SITE PLAN

GENERAL NOTES

1. INFORMATION SHOWN ON THIS DRAWING IS INTENDED TO ILLUSTRATE A WORKING CONCEPT FOR SPLICED U-GIRDERS.
2. ALL CONCRETE DIMENSIONS AND REINFORCEMENT SHOWN ARE FOR ILLUSTRATION PURPOSES ONLY.
3. SOIL FOR ANY CRANE PAD SHALL BE COMPACTED BY THE CONTRACTOR AND SHALL BE ACCEPTED BY THE CRANE OPERATOR PRIOR TO COMMENCING WITH ERECTION.
4. RIGGING SHALL BE PROVIDED BY THE ERECTOR WITH A MINIMUM SAFE WORKING LOAD OF THE CHARTED MAXIMUM LIFT WEIGHT. FURTHER DETAILS REGARDING RIGGING SHALL BE PROVIDED BY THE ERECTION SUBCONTRACTOR.
5. THE CONTRACTOR SHALL VERIFY THAT CRANE MOVEMENT DOES NOT INTERFERE WITH EXISTING FACILITIES, UTILITIES, OR TERRAIN PRIOR TO PROCEEDING WITH GIRDER ERECTION.
6. GIRDER ERECTION SHALL NOT PROCEED DURING INCLEMENT WEATHER OR WIND SPEEDS IN EXCESS OF 25 MPH.
7. GIRDERS SHALL CONFORM TO PCI TOLERANCES PER PENNDOT SPECIFICATION. BEAMS ACCEPTED BY THE OWNER ARE ASSUMED TO MEET THE SPECIFICATIONS.
8. ACTUAL GIRDER ERECTION SCHEDULE AND DETAILED SCHEDULE REGARDING WORKING HOUR RESTRICTIONS SHALL BE PROVIDED BY CONTRACTOR.
9. GIRDER LAUNCHERS AND TROLLEYS WILL NOT BE USED.
10. REFER TO FALSEWORK DRAWINGS FOR FALSEWORK AND CONNECTION DETAILS AT SPLICES.
11. ALL GIRDERS SHALL BE LIFTED BY LIFT LOOPS PER SHOP DRAWINGS.
12. CONTRACTOR SHALL BE RESPONSIBLE FOR SAFETY ISSUES RELATING TO TRAFFIC IN AREAS ADJACENT TO ERECTION OPERATIONS.

REPRESENTATIVE GIRDER LIFT CHART

GIRDER NUMBER	MAX GIRDER LENGTH (ft.)	MAX GIRDER WEIGHT (kips)	MAX LIFT WEIGHT 300 TON CRANE (kips) **	e (ft.)
1L&R	78.5	193.5	107.0	1.00
2L&R	78.5	203.0	112.0	1.00
3L&R	98.0	306.0	166.0	1.50
4L&R	98.0	248.0	135.0	1.25
5L&R	98.0	248.0	135.0	1.25
6L&R	98.0	306.0	166.0	1.50
7L&R	78.5	203.0	112.0	1.00
8L&R	78.5	193.5	107.0	1.00

** LIFT WEIGHT INCLUDES 5000 LB BLOCK & RIGGING WEIGHT PLUS 5% IMPACT

ERECTION SEQUENCE

GIRDERS WILL BE ERECTED IN THE FOLLOWING ORDER:

1. 1R
2. 1L
3. 2R
4. 2L
5. 3R
6. 3L
7. 4R
8. 4L
9. 5R
10. 5L
11. 6R
12. 6L
13. 7R
14. 7L
15. 8R
16. 8L

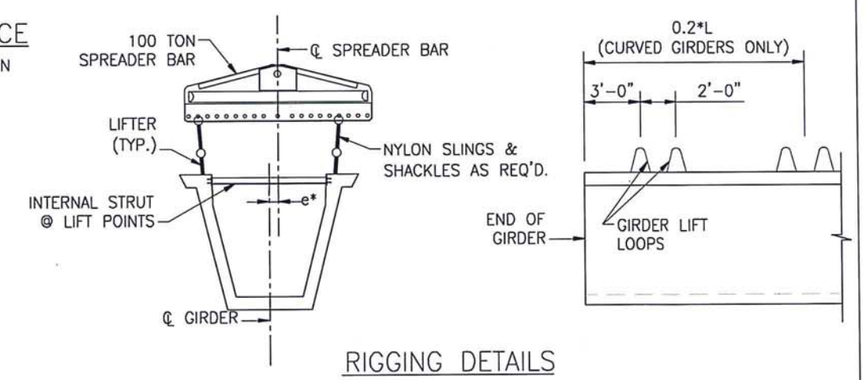

RIGGING DETAILS

* RIGGING OFFSET e IS TOWARD OUTSIDE OF GIRDER CURVE

PENNDOT DRAWING 15-601-BDTD

GIRDER ERECTION PLAN

5/31/2016

5/20/16

COMMONWEALTH OF PENNSYLVANIA
REGISTERED PROFESSIONAL
GREGG A. REESE
ENGINEER
No. 044122R

CENTRAL ATLANTIC BRIDGE ASSOCIATES (CABA)	Summit Engineering Group, Incorporated Consulting Structural Engineers — 10822 W. Toller Drive, Ste 330 Littleton, CO 80127 P: 303-933-9114 www.summit-eng-group.com
COMMONWEALTH OF PENNSYLVANIA DEPARTMENT OF TRANSPORTATION	DATE: / SCALE
SPLICED POST-TENSIONED CONCRETE U-GIRDER STANDARDS	DWN: / CH'D: / JOB NO.
CONSTRUCTION DETAILS 2 ERECTION AND LIFT PLAN	SHEET NO. 19

GENERAL NOTES

DESCRIPTION – THIS WORK IS GROUTING OF STEEL POST-TENSIONING TENDONS IN CONCRETE STRUCTURES. THIS SPECIFICATION APPLIES TO ALL GROUTED POST-TENSIONING OPERATIONS IN BRIDGE SUPERSTRUCTURE AND SUBSTRUCTURE, INCLUDING BOX-GIRDERS, I-GIRDERS, SEGMENTAL GIRDERS, SPLICED GIRDERS, PIER CAPS, AND PIERS.

FOR GROUTING, ONLY PREPACKAGED GROUTS USED WITHIN 150 DAYS OF MANUFACTURE MAY BE USED. A PREPACKAGED GROUT IS ANY DRY BLEND OF THE LISTED MATERIALS FOUND IN CEMENT GROUT PRODUCED AND PACKAGED BY A COMMERCIAL GROUT MANUFACTURER. PROVIDE PREPACKAGED GROUT IN PLASTIC-LINED OR COATED BAGS. PRINT ON EACH BAG: APPLICATION, DATE OF MANUFACTURE, LOT NUMBER AND MIXING INSTRUCTIONS, INCLUDING THE MINIMUM AND MAXIMUM WATER CONTENT. IN ADDITION, SUBMIT TEST VALUES FOR ALL THE REQUIREMENTS IN THIS SECTION AT BOTH THE MINIMUM AND MAXIMUM WATER CONTENT TO THE DEPARTMENT.

MATERIAL

(A) CEMENT

1. PORTLAND CEMENT. TYPE I OR II CEMENT CONFORMING TO ASTM 450, STANDARD SPECIFICATION FOR PORTLAND CEMENT.

2. BLENDED CEMENT. CONFORMING TO ASTM C595, STANDARD SPECIFICATION FOR BLENDED HYDRAULIC CEMENTS.

3. CEMENT SHALL HAVE A BLAINE VALUE BETWEEN 3.85 AND 4.88 YD^2/LB.

(A) WATER

SECTION 720.1. LESS THAN 500 PPM OF CHLORIDE IONS WITHOUT PRESENCE OF ORGANIC MATERIALS.

(B) MINERAL ADDITIVES

1. FLY ASH OR CALCINED NATURAL POZZOLAN FOR USE AS A MINERAL ADMIXTURE IN PORTLAND CEMENT CONCRETE. THE AMOUNT OF FLY ASH GENERALLY VARIES BETWEEN 10% – 30% OF THE PORTLAND CEMENT BY WEIGHT (MASS). SUBMIT A MATERIAL SAFETY DATA SHEET (MSDS). CERTIFY AS SPECIFIED IN SECTION 106.03 (B) 3.

2. GROUND GRANULATED BLAST FURNACE SLAG. GRADE 120 SLAG IN ACCORDANCE WITH ASTM C989, GROUND GRANULATED BLAST FURNACE SLAG FOR USE IN CONCRETE AND MORTARS. THE AMOUNT OF SLAG GENERALLY VARIES BETWEEN 30% – 55% OF THE PORTLAND CEMENT CONTENT BY WEIGHT (MASS). CERTIFY AS SPECIFIED IN SECTION 106.03 (B)

3. SILICA FUME. ASTM C1240 "SILICA FUME FOR USE IN HYDRAULIC CEMENT CONCRETE AND MORTAR." THE AMOUNT OF SILICA FUME GENERALLY VARIES BETWEEN 3% – 10% OF THE PORTLAND CEMENT BY WEIGHT (MASS). IF USED, SHOW THAT SILICA FUME PARTICLES DO NOT AGGLOMERATE THROUGH THE EVALUATION OF THE HARDENED GROUT. CERTIFY AS SPECIFIED IN SECTION 106.03 (B) 3.

(A) CHEMICAL ADMIXTURES.

1. SET CONTROLLING. TYPE D – WATER-REDUCING AND RETARDING ADMIXTURES, TYPE E – NON-CHLORIDE WATER-REDUCING AND ACCELERATING ADMIXTURES, TYPE F – WATER-REDUCING HIGH-RANGE ADMIXTURES, AND TYPE G – WATER-REDUCING HIGH-RANGE AND RETARDING ADMIXTURES IN ACCORDANCE WITH ASTM C494, STANDARD SPECIFICATION FOR CHEMICAL ADMIXTURES FOR CONCRETE. USE TYPES F AND G ONLY UP TO 45 OZ PER 100 LB OF PORTLAND CEMENT.

2. ANTI-BLEED. USE IN GROUT IF NECESSARY TO SATISFY THE TESTING REQUIREMENTS UNDER QUALITY CONTROL. USE NON-CORROSIVE ADMIXTURES.

3. EXPANSIVE AGENTS. USE ONLY INERT GAS FORMING ADMIXTURES. AVOID ANY GAS FORMING SYSTEM THAT PRODUCES HYDROGEN, CARBON DIOXIDE, OXYGEN OR AIR. WHEN INERT GAS IS FORMED, THE LEVEL OF VERTICAL HEIGHT CHANGE SHALL BE NO GREATER THAN 2.0% UP TO 3 HOURS CONFORMING TO ASTM C940, STANDARD TEST METHOD FOR EXPANSION AND BLEEDING OF FRESHLY MIXED GROUTS FOR PRE-PLACED AGGREGATE CONCRETE IN THE LABORATORY. IF THE CEMENT SOURCE OR COMPOSITION CHANGES, RETEST THE MATERIAL.

4. CORROSION INHIBITORS. CORROSION INHIBITORS ARE PROHIBITED.

(A) AGGREGATE

FINE AGGREGATE, TYPE A, WITH A MAXIMUM SIZE OF .039 IN, CONFORMING TO ASTM C33, STANDARD SPECIFICATION FOR CONCRETE AGGREGATES, EXCEPT FOR GRADATION, FROM A SOURCE LISTED IN BULLETIN 14 OR APPROVED BY MTD.

(B) FILLERS ARE NOT PERMITTED IN GROUT.

TESTING AND ACCEPTANCE

(A) TESTING FACILITIES AND EQUIPMENT

PROVIDE SUFFICIENT THERMOMETERS AND EQUIPMENT NEEDED FOR REQUIRED TESTS. HAVE BACK-UP EQUIPMENT AVAILABLE TO ENSURE THAT NO TESTS ARE MISSED. PROVIDE SUFFICIENT INCIDENTAL EQUIPMENT SUCH AS BUCKETS, SCOOPS, ETC., AS NEEDED. PROPERLY MAINTAIN ALL EQUIPMENT USED FOR TESTING. HAVE SCALES, BALANCES, AND THE COMPRESSION MACHINE CALIBRATED AT LEAST ONCE PER YEAR BY AN INDEPENDENT AGENCY ACCEPTABLE TO THE DEPARTMENT. RE-CALIBRATE THE COMPRESSION MACHINE WHEN RELOCATED. MAINTAIN ACCURATE RECORDS OF CALIBRATION. IF THE COMPRESSION MACHINE IS OUT OF TOLERANCE OR MALFUNCTIONS, RETURIN IT TO WORKING ORDER WITHIN 24 HOURS OR SUPPLY A BACK-UP MACHINE UNTIL THE PROBLEM IS CORRECTED.

(B) PRE-QUALIFICATION TESTING

PRE-QUALIFY ALL PREPACKAGED GROUTS IN ACCORDANCE WITH THE REQUIREMENTS OF TABLE A: PERFORMANCE REQUIREMENTS FOR INCLUSION IN BULLETIN 15.

SUBMIT TEST REPORT OF PREPACKAGED GROUTS SHOWING CONFORMANCE TO TABLE A: PERFORMANCE REQUIREMENTS AT THE MAXIMUM AND MINIMUM ALLOWABLE WATER-CEMENTITIOUS MATERIALS RATIO AS STATED ON THE BAG. RETEST AND CERTIFY PREPACKAGED GROUTS A MINIMUM OF EVERY 1 YEAR FOR INCLUSION IN BULLETIN 15. SUBMIT SEPARATE TEST REPORTS FOR EACH PLANT PRODUCING GROUT. ALSO RETEST PREPACKAGED GROUTS WHEN THERE IS A CHANGE OF MATERIAL OR MATERIAL SOURCE. USE GROUT FROM ONE PLANT FOR ANY GIVEN PROJECT LOCATION. STATE ON THE BAG THE METHOD OF FLOW CONE TESTING (STANDARD OR MODIFIED) USED TO TEST GROUT FLUIDITY. ONCE A PREPACKAGED GROUT IS PREQUALIFIED WITHIN THE TWO YEAR PERIOD, THE ONLY TESTING REQUIRED FROM THE LIST BELOW FOR A SPECIFIC PROJECT LOCATION IS QUALITY CONTROL TESTING AS GIVEN IN SECTION (I). ALL GROUTS SHOULD BE USED WITHIN THE SPECIFIED SHELF-LIFE AS GIVEN BY THE MANUFACTURER.

1. SETTING TIME TEST. ASTM C953, STANDARD TEST METHOD FOR TIME OF SETTING OF GROUTS FOR PREPLACED AGGREGATE CONCRETE IN THE LABORATORY. FOR STIFFER PASTE MIXES, FOLLOW AASHTO T-131, STANDARD TEST METHOD FOR TIME OF SETTING OF HYDRAULIC CEMENT BY VICAT NEEDLE.

2. GROUT STRENGTH TEST. ASTM C942, STANDARD TEST METHOD FOR COMPRESSIVE STRENGTH OF GROUTS FOR PREPLACED-AGGREGATE CONCRETE IN THE LABORATORY. IF THE GROUT IS EXPANSIVE, COVER CUBES WITH WEIGHTED PLATES SUFFICIENT TO CONTAIN THE EXPANSION DURING CURE.

3. PERMEABILITY TEST. ATSM C1202, TEST METHOD FOR ELECTRICAL INDICATION OF CONCRETE'S ABILITY TO RESIST CHLORIDE ION PENETRATION. USE A VOLTAGE OF 30 V.

4. VOLUME CHANGE TEST – ASTM C1090, STANDARD TEST METHOD FOR MEASURING CHANGES IN HEIGHT OF CYLINDRICAL SPECIMEN FROM HYDRAULIC-CEMENT GROUT.

5. THIXOTROPIC GROUT PUMPABILITY AND FLUIDITY TEST – MODIFIED VERSION OF ASTM C939. FILL THE FLOW CONE TO THE TOP WITH GROUT AND MEASURE THE EFFLUX TIME TO FILL ONE LITER.

6. WICK INDUCED BLEED TEST – A MODIFICATION OF THE ASTM C940 TEST AS OUTLINED IN SECTION C4.4.6.1 SHALL BE USED. THE TESTING DEVICE SHALL CONSIST OF A TRANSPARENT TUBE AND HAVE THE FOLLOWING APPROXIMATE DIMENSIONS: HEIGHT 40IN. AND INTERNAL NOMINAL DIAMETER OF 3IN. THE MAXIMUM PERMISSIBLE BLEEDING SHALL BE 0.0% AT THREE HOURS WHEN RUN AT A NORMAL AMBIENT ROOM TEMPERATURE OF APPROXIMATELY 68°F.

7. SCHUPACK PRESSURE BLEED TEST – ASTM 1741, ACCEPTABLE BLEED VALUES FOR CLASS B, C, AND D GROUTS ARE SHOWN IN TABLE B.

8. ACCELERATED CORROSION TEST (ACT) – FOLLOW APPENDIX B OF THE GUIDE SPECIFICATION FOR GROUTING OF POST-TENSIONED STRUCTURES, PUBLISHED BY THE POST-TENSIONING INSTITUTE.

9 API MUD BALANCE TEST – API RECOMMENDED PRACTICE 13B-1, STANDARD PROCEDURES FOR FIELD TESTING WATER-BASED DRILLING FLUIDS. THE MUD BALANCE APPARATUS SHOULD BE NON-REACTIVE WITH THE GROUT.

10. CHLORIDE ION CONTENT – ASTM C1152. CHLORIDE ION CONTENT SHOULD BE INDIVIDUALLY TESTED ON THE TRIAL BATCH TO BE SHOWN IT IS BELOW THE LIMIT IN TABLE A FOR THE MIXED GROUT. ALL MATERIALS, INCLUIDNG THE WATER, SHALL BE THE SAME SOURCE AS WILL BE USED FOR THE PRODUCTION GROUTING, ONE CHLORIDE ION CONCENTRATION TEST SHALL BE PERFORMED ON THE MIXED GROUT ONCE PER PROJECT AND MINIMUM EVERY 18 TONS (40,000 LB) OF THE MATERIAL BEFORE THE ADDITION OF WATER.

11. INCLINED TUBE BLEED TEST – GROUT BLEEDING SHALL NOT EXCEED 0.3% OF THE INITIAL VOLUME OF THE GROUT AFTER THREE HOURS KEPT AT REST. THE INCLINED TUBE TEST SHALL BE PERFORMED IN ACCORDANCE WITH EN 445.

TABLE A: PERFORMANCE REQUIREMENTS

TEST	PERFORMANCE CRITERIA	TEST METHOD
SETTING TIME TEST	MIN. 3 HOURS; MAX 12 HOURS	ASTM C953*
GROUT STRENGTH TEST (AVERAGE OF 3 CUBES)	≥ 3,000 PSI AT 7 DAYS, ≥5,000 PSI AT 28 DAYS	MIN C942
PERMEABILITY TEST (AT 28 DAYS)	MAX 2,500 COULOMBS AT 30V AFTER 6 HOURS	ASTM C1202
VOLUME CHANGE TEST	0.0% TO +0.1% AT 24 HOURS MAX +0.2% AT 28 DAYS	ASTM C1090
THIXOTROPIC FLUIDITY TEST **	5 TO 20 SEC., IMMEDIATELY AFTER MIXING MAX.. 30 SEC. 30 MIN AFTER MIXING WITH REMIXING FOR 30 SEC.	MODIFIED ASTM C939
WICK INDUCED BLEED TEST (AT 3 HOURS)	MAX. 0.0%	MODIFIED ASTM C940
SCHUPACK PRESSURE BLEED TEST	SEE TABLE B	
ACCELERATED CORROSION TEST (AVERAGE TIME TO CORROSION)	>0.45 W/CM, PLAIN GROUT USING SAME EQUIPMENT APPENDIX B GUIDE SPECIFICATION FOR GROUTING OF POST-TENSIONED STRUCTURES, PUBLISHED BY THE POST-TENSIONING INSTITUTE	
API MUD BALANCE TEST	VALUE > 1.9	
CHLORIDE ION CONTENT	MAX. 0.08% BY WEIGHT OF CEMENTITIOUS MATERIAL	ASTM C1152
INCLINED TUBE BLEED TEST	MAX 0.3% OF INITIAL VOLUME OF GROUT AFTER 3 HOURS	EN445

* FOR STIFFER PASTE MIXES, FOLLOW AASHTO T-1.31.
** MEET EITHER THE STANDARD ASTM C939 FLOW CONE TEST OR THE MODIFIED TEST. ENSURE THAT THE BAG OF PREPACKAGED GROUT STATES WHICH TEST SHOULD BE USED.

TABLE B: SCHUPACK PRESSURE TEST LIMITS (BLEED UNDER PRESSURE LIMITS)

VERTICAL RISE, X (FT)	SCHUPACK PRESSURE (PSI)	MAX% BLEED (% OF SAMPLE VALUE)
0 ≤ X ≤ 2	20	4
2 < X ≤ 6	30	2
6 < X ≤ 20	50	0
X > 20	100	0

NOTE: PRESSURE VALUES IN TABLE B ARE NOT HARD CONVERSIONS. REPORT RESULTS IN THE UNITS OF THE PRESSURE GAUGE USED.

(C) MATERIALS CERTIFICATION

PROVIDE WRITTEN CERTIFICATION THAT ALL INGREDIENTS USED IN THE GROUT CONFORM TO THE MATERIAL SECTION OF THIS SPECIFICATION. THIS SHALL INCLUDE, BUT SHALL NOT BE LIMITED TO, TEST REPORTS FOR:

a. CEMENT MILL TEST REPORTS;
b. MINERAL ADDITIVES' TEST REPORTS;
c. CHEMICAL ADMIXTURES' TEST REPORTS;
d. CHLORIDE ION LEVELS OF ALL CONSTITUENTS;
e. SHELF LIFE/EXPIRATION OF ADMIXTURES; AND
f. TEST REPORTS FOR ANY OTHER INGREDIENTS USED IN THE GROUT.

CONSTRUCTION

(A) GROUT TECHNICIAN

PROVIDE, AND ASSIGN TO THE WORK, AN AMERICAN SEGMENTAL BRIDGE INSTITUTE (ASBI) CERTIFIED GROUT TECHNICIAN TO CONTROL THE QUALITY OF THE MATERIALS USED, TO PERFORM REQUIRED GROUT TESTS, AND TO CONTROL THE OPERATIONS SO THAT THE GROUT COMPLIES WITH SPECIFICATIONS AT THE POINT OF PLACEMENT.

THE INSPECTOR DOES NOT ASSUME, BY ACT OR BY WORD, ANY RESPONSIBILITY FOR BATCH CONTROL ADJUSTMENTS; CALCULATIONS; OR FOR SETTING OF ANY DIALS, GAUGES, SCALES, OR METERS. FAILURE OF THE INSPECTOR TO REJECT GROUT DOES NOT RELIEVE THE CONTRACTOR'S OBLIGATION TO PROVIDE GROUT MEETING SPECIFICATIONS.

(B) INLETS AND OUTLETS

PROVIDE THE MINIMUM INNER DIAMETER OF INLETS AND OUTLETS WITH AT LEAST 3/4 IN FOR STRAND TENDONS AND 3/8 IN FOR SINGLE BAR TENDONS. PLACE INLETS AND OUTLETS AT LOCATIONS RECOMMENDED BY THE DESIGN OR CONSTRUCTION ENGINEER AND AT THE FOLLOWING LOCATIONS:

- AT THE ANCHORAGE AREA OF THE TENDON.
- AT THE HIGHEST POINTS OF THE DUCT, WHEN THE VERTICAL DISTANCE BETWEEN THE HIGHEST AND LOWEST POINT IS MORE THAN 20 IN.
- WHERE OUTLETS ARE PLACED AT THE HIGH POINTS, AT A DISTANCE NOT TO EXCEED 39 IN IN BOTH DIRECTIONS FROM THE HIGH-POINT OUTLETS.
- AN ADDITIONAL OUTLET AT A SHORT DISTANCE DOWNSTREAM (AT APPROXIMATELY THE LOCATION WHERE THERE HAS BEEN A VERTICAL DROP OF A DISTANCE EQUAL TO ONE DUCT DIAMETER) OF A HIGH POINT OUTLET.
- AT MAJOR CHANGES IN THE CROSS-SECTION OF THE DUCT, SUCH AS COUPLERS AND ANCHORAGES.
- AT ALL LOW POINTS (FREE-DRAINING).
- PRIMARY INLET: AT OR NEAR THE LOWEST POINT OF THE TENDON.

PROVIDE INLETS AND OUTLETS WITH POSITIVE SHUT-OFFS AND CHECK TO BE SURE THEY CAN BE PROPERLY OPENED AND CLOSED.

5/31/2016

PENNDOT DRAWING 15-601-BDTD

COMMONWEALTH OF PENNSYLVANIA
REGISTERED PROFESSIONAL
GREGG A. REESE
ENGINEER
No. 044122R

5/20/16

CENTRAL ATLANTIC BRIDGE ASSOCIATES (CABA)

Summit Engineering Group, Incorporated
Consulting Structural Engineers
10622 W. TOLLER DRIVE, STE 330
LITTLETON, CO 80127
P: 303-933-9114
www.summit-eng-group.com

COMMONWEALTH OF PENNSYLVANIA
DEPARTMENT OF TRANSPORTATION

SPLICED POST-TENSIONED CONCRETE U-GIRDER STANDARDS

GROUT SPECIFICATIONS 1

DATE: 2/27/2015
SCALE N/A
DWN: GAR CH'D: MTR
JOB NO.
SHEET NO. 20

(C) GROUTING EQUIPMENT

PROVIDE GROUTING EQUIPMENT THAT WILL GROUT THE LONGEST TENDON ON THE PROJECT IN LESS THAN 30 MINUTES ONCE MIXING BEGINS AND THAT WILL PROVIDE A CONTINUOUS SUPPLY OF HOMOGENOUS GROUT (UNLESS WAIVED BY THE ENGINEER FOR PROJECTS WITH VERY LARGE TENDONS). PLACE A SCREEN BETWEEN THE MIXER AND THE PUMP, OR BETWEEN THE MIXER AND THE STORAGE HOPPER. PROVIDE A BACKUP GROUT MIXER AND PUMP. WHERE WATER IS NOT SUPPLIED THROUGH THE PUBLIC WATER SUPPLY SYSTEM, PROVIDE A WATER STORAGE TANK OF SUFFICIENT CAPACITY AND PROVIDE APPROVED PRESSURIZED FLUSHING EQUIPMENT.

1. MIXER. USE THE MIXER TYPE PLANNED FOR PUMPING IN A FIELD TRIAL TO ENSURE PROPERTIES SIMILAR TO THOSE FROM PREQUALIFICATION TESTING WILL BE ACHIEVED AND TO DETERMINE OPTIMUM MIXING TIME.

- HIGH-SHEAR OR COLLOIDAL MIXER. MINIMUM 1,500 RPM.

2. STORAGE HOPPER. EQUIP THE STORAGE HOPPER WITH AN AGITATOR. KEEP THE STORAGE HOPPER PARTIALLY FULL AT ALL TIMES WHILE PUMPING TO AVOID PUMPING AIR INTO THE TENDON. IF AN ADDITIONAL STORAGE HOPPER IS NEEDED, PLACE IT BETWEEN THE MIXER AND PUMP AND EQUIP IT WITH AN AGITATOR.

3. SCREEN. MAXIMUM SCREEN OPENING OF 0.125 IN (0.118 IF THE GROUT CONTAINS THIXOTROPIC ADMIXTURE).

4. GROUT INJECTION EQUIPMENT. USE EQUIPMENT WITH A SYSTEM THAT CAN RECIRCULATE THE GROUT WHILE GROUTING HAS TEMPORARILY STOPPED. PLACE A VALVE ON THE EQUIPMENT THAT CAN LOCK OFF THE TENDON UNDER PRESSURE ONCE THE DUCT IS COMPLETELY GROUTED.

- PUMP. USE A POSITIVE PRESSURE PUMP THAT CAN MAINTAIN AN OUTLET PRESSURE OF AT LEAST 145 PSI. USE A PUMP WITH SEALS TO KEEP OIL, AIR AND OTHER SUBSTANCES OUT OF THE GROUT AND TO PREVENT ANY LOSS OF THE GROUT AND WATER.
- PRESSURE GAUGE. PLACE A PRESSURE GAUGE CAPABLE OF READING NO MORE THAN 290 PSI BETWEEN THE PUMPING OUTLET AND THE DUCT INLET.

5. VACUUM GROUTING EQUIPMENT. IF INSPECTION INDICATES THAT REPAIRS ARE NEEDED, PROVIDE VACUUM GROUTING EQUIPMENT AT THE JOB SITE. USE VACUUM GROUTING EQUIPMENT OF THE VOLUMETRIC MEASURING TYPE WITH THE ABILITY TO MEASURE A VOID AND SUPPLY A MEASURED VOLUME OF GROUT TO FILL THE VOID.

6. COMPRESSED AIR. USE OIL-FREE AND WATER-FREE COMPRESSED AIR TO CHECK THE DUCTS FOR LEAKS AND EXPEL ANY EXCESS WATER BEFORE THE GROUTING OPERATION BEGINS.

(A) PROTECTION OF TENDONS PRIOR TO GROUTING

1. PRIOR TO INSTALLATION. CAP DUCTS TO PREVENT ENTRANCE OF MOISTURE, CHLORIDES, OR DEBRIS PRIOR TO INSTALLATION OF THE PRESTRESSING STRAND. LEAVE VENTS CLOSED UNTIL AIR TESTING.

2. AFTER INSTALLATION. PREVENT PRECIPITATION AND DEBRIS FROM ENTERING DUCTS AT ALL TIMES. IF STRAND WILL BE EXPOSED FOR MORE THAN 24 HOURS BETWEEN INSTALLATION AND STRESSING, WRAP STRAND ENDS AND THE ANCHORAGE OPENING WITH PLASTIC AND WATERPROOF TAPE TO PREVENT EXPOSURE TO MOISTURE AND CHLORIDES.

3. AFTER STRESSING. CAP AND COVER ANCHORAGES IMMEDIATELY AFTER STRAND TAILS ARE CUT TO PREVENT ENTRANCE OF MOISTURE OR CHLORIDES. AFTER TENDONS ARE AIR TESTED, CLOSE ALL VENTS AND INSTALL PERMANENT GROUT CAPS. PERMISSIBLE TIME LIMIT FOR EXPOSURE BETWEEN STRESSING AND GROUTING WITHOUT ADDITIONAL CORROSION PROTECTION IS 7 DAYS,

- ADDITIONAL CORROSION PROTECTION. IF THE TENDONS WILL NOT BE GROUTED WITHIN 7 DAYS FROM THE TIME OF STRESSING, ADDITIONAL CORROSION PROTECTION IS REQUIRED. ADDITIONAL PROTECTION MAY INCLUDE CORROSION-INHIBITING MATERIALS APPLIED TO THE STRAND PRIOR TO INSERTION IN THE DUCT, CORROSION INHIBITORS BLOWN INTO THE DUCT AFTER STRESSING, OR OTHER METHODS APPROVED BY THE ENGINEER. MATERIALS APPLIED TO THE STRAND MAY REDUCE BOND. TEST RESULTS SHOWING CORROSION PROTECTION AND DEGREE OF BOND REDUCTION IN PULL-OUT TESTS MUST BE PROVIDED TO THE ENGINEER PRIOR TO APPROVAL OF THE USE OF THE CORROSION-INHIBITING MATERIAL. THE MATERIAL MUST BE COMPATIBLE WITH GROUT. TENDONS SHOULD NOT BE FLUSHED WITH WATER PRIOR TO GROUTING.

(A) GROUTING PLAN

SUBMIT A GROUTING PLAN TO THE ENGINEER FOR REVIEW AND ACCEPTANCE AT LEAST 4 WEEKS PRIOR TO GROUTING. PERFORM A MOCK-UP TEST WITH THE EQUIPMENT AND MATERIALS THAT WILL BE USED ON THE JOB AND SUBMIT RESULTS WITH THE GROUTING PLAN. INCLUDE THE FOLLOWING IN THE GROUTING PLAN:

-NAMES, EXPERIENCE AND QUALIFICATIONS OF GROUTING CREW AND SUPERVISOR: ASBI CERTIFICATION DOCUMENTATION FOR THE TECHNICIAN AND BACKUP.
- TYPE OF EQUIPMENT (TYPE, SPEED, CAPACITY, INCLUDING BACK-UP EQUIPMENT).
- TARGETED FLOW RATE DURING PUMPING AND METHOD OF CONTROLLING RATE.
- TYPE OF GROUT AND WATER CONTENT THAT WILL BE USED FOR INITIAL ON-SITE MIX.
- ESTIMATED QUANTITY OF GROUT FOR EACH TENDON GROUP.
- MATERIALS CERTIFICATION.
- LIST OF ON-SITE TESTING AND FREQUENCY.
- INLET AND VENTION DETAILS (TYPE, LOCATION, SIZE).
- PLANS FOR PROTECTION OF TENDONS PRIOR TO GROUTING (PRIOR TO INSTALLATION AND AFTER INSTALLATION).
- PROVIDE A PLAN (ADDITIONAL PROTECTION) IF TENDONS WILL REMAIN UNGROUTED MORE THAN 7 DAYS.
- AIR TESTING PROCEDURE.
- GROUT MIXING AND PUMPING PROCEDURES.
- ORDER OF TENDON GROUTING.
- DIRECTION OF GROUTING AND SEQUENCE OF VENT SHUTOFF.
- PRECDURES FOR BLOCKAGES (INCLUDING MEANS OF FLUSHING IF NECESSARY)
- PROCEDURES FOR INSPECTION OF TENDONS AFTER GROUTING.
- PROCEDURES FOR FILLING ANY VOIDS.
- SAMPLE GROUTING RECORD FORMS.
- RESULTS OF TENDON MOCK-UP.

(F) PRE-GROUTING OPERATIONS

STORE GROUT IN A DRY LOCATION. IF STORING IN THE OPEN, THE GROUT MUST BE ON A RAISED PLATFORM WITH ADEQUATE WATERPROOF COVERING. LIMIT ON-SITE STORAGE OF GROUT TO A MAXIMUM PERIOD OF ONE MONTH. GROUT MUST BE USED WITHIN 150 DAYS OF DATE OF MANUFACTURE.

PLACE A PERMANENT PLASTIC END CAP WITH A VENT OVER EACH ANCHOR HEAD IMMEDIATELY AFTER STRAND TAILS ARE CUT.

BEFORE GROUTING BEGINS, CHECK AND PREPARE DUCTS BY BLOWING THROUGH OIL-FREE AND WATER-FREE COMPRESSED AIR. OPEN AND CLOSE EACH VENT IN TURN TO BLOW OUT MOISTURE. THE DUCT SHOULD BE ABLE TO MAINTAIN A PRESSURE OF 20PSI WITH ALL VENTS CLOSED. IF THE SYSTEM CANNOT HOLD PRESSURE, LOCATE AND REPAIR LEAKS PRIOR TO GROUTING.

ATTAIN ACCEPTANCE OF THE GROUTING PROCEDURE FROM THE ENGINEER PRIOR TO GROUTING. INCLUDE THE FOLLOWING IN THE PROCEDURE:

- INSPECTION TO ENSURE THAT ALL MATERIALS ARE OF THE SPECIFIED TYPE AND QUANTITY.
- INSPECTION TO ENSURE THAT ALL EQUIPMENT IS IN SATISFACTORY CONDITION.
- INSPECTION OF DUCTS TO ENSURE THAT THEY ARE FREE OF WATER, DEBRIS, AND OTHER OBSTRUCTIONS.
- INSPECTION OF DUCTS TO ENSURE THAT THERE WILL BE NO GROUT LEAKAGE BETWEEN ADJACENT DUCTS IN THE JOINT AREAS OR AT COUPLERS FOR EXTERNAL TENDONS.
- TEMPERATURE MEASUREMENT OF AIR, WATER, AND PREPACKAGED GROUT TO ENSURE THAT THEY ARE WITHIN THE ACCEPTABCE REQUIREMENTS SPECIFIED FOR TEMPERATURE CONSIDERATIONS.
- INSPECTION OF ALL PREPACKAGED GROUT OR CEMENT PACKAGES FOR EVIDENCE OF AGE AND DAMPNESS, SUCH AS LUMPS AND HARDENED PIECES.
- COMMENCE GROUTING OPERATIONS ONLY AFTER THE ENGINEER'S ACCEPTANCE TO PROCEED IS RECEIVED.
- GROUT ONLY WHEN BOTH THE AMBIENT AIR TEMPERATURE AND SUBSTRATE TEMPERATURE ARE AT LEAST 41 DEGREES F DURING THE GROUTING OPERATION AND FOR 3 HOURS THEREAFTER. ADDITIONALLY, GROUT TEMPERATURE MUST BE MAINTAINED ABOVE 35 DEGREES F FOR 3 CONSECUTIVE DAYS AFTER GROUTING.

(A) MIXING CONDITIONS

1. HOT WEATHER. EMPLOY HOT-WEATHER MIXING AND PROTECTION METHODS WHEN THE AMBIENT AIR TEMPERATURE EXCEEDS 90° F. COOL-MIX WATER TO MAINTAIN GROUT TEMPERATURE AT 80°F OR BELOW AT THE TIME OF GROUTING. ICE MAY BE NECESSARY AND IF USED SHOULD BE ADDED TO THE MIX WATER TO LOWER THE WATER TEMPERATURE PRIOR TO MIXING. DO NOT ALLOW ICE IN THE GROUT MIXTURE.

2. COLD WEATHER. MAINTAIN A DAILY RECORD OF MINIMUM AND MAXIMUM AMBIENT AIR TEMPERATURES DURING COLD WEATHER. RECORD THE TEMPERATURE OF THE GROUT DRY INGREDIENTS AND THE STRUCTURE SURROUNDING THE DUCTS TO BE GROUTED.

WHEN AMBIENT AIR TEMPERATURE HAS BEEN BELOW (32° F) AFTER DUCT PLACEMENT AND PRIOR TO GROUTING, BLOW DRY AIR THROUGH THE DUCTS TO EXPEL ANY TRAPPED WATER, FROST, OR ICE. GROUT ONLY WHEN BOTH THE AMBIENT AIR TEMPERATURE AND SUBSTRATE TEMPERATURE ARE AT LEAST 41 DEGREES F DURING THE GROUTING OPERATION AND FOR 3 HOURS THEREAFTER. ADDITIONALLY, GROUT TEMPERATURE MUST BE MAINTAINED ABOVE 35 DEGREES F FOR 3 CONSECUTIVE DAYS AFTER GROUTING.

(A) GROUTING OPERATIONS

OPEN ALL VENTS JUST PRIOR TO GROUTING. GROUT TENDONS IN AN UPHILL DIRECTION. UNLESS OTHERWISE APPROVED BY THE ENGINEER (IN CASES WITH UNUSUAL GEOMETRY OR CONSTRUCTION PROBLEMS), START GROUTING FROM NEAR THE LOWEST INLET. MAINTAIN A CONTINUOUS, ONE-WAY FLOW FOR THE DURATION OF A GROUTING STAGE. USE A METHOD OF INJECTING GROUT THAT ENSURES COMPLETE FILLING OF THE DUCTS AND COMPLETE SURROUNDING OF THE STRAND OR BAR WITHIN 30 MINUTES OF THE FIRST ADDITION OF WATER TO THE DRY INGREDIENTS UNLESS OTHERWISE APPROVED BY THE ENGINEER.

INJECT GROUT AT A TARGET RATE BETWEEN 16.4 FT AND 49.2 FT OF DUCT PER MINUTE UNLESS OTHERWISE APPROVED BY THE ENGINEER. PUMP THE GROUT THROUGH THE DUCT UNTIL THERE IS CONTINUOUS FLOW AT THE FIRST OUTLET. CLOSE THE OUTLET AFTER THE EJECTED GROUT FLOW SHOWS NO VISIBLE POCKETS OF WATER OR AIR AND THE CONSISTENCY OF THE GROUT IS THE SAME AS THAT OF THE GROUT BEING PUMPED. EJECT A MINIMUM OF 1 GALLON OF WASTE GROUT FROM EACH VENT (OUTLET) AND APPROXIMATELY 5 GALLONS FROM THE FINAL OUTLET. IF GROUT CONSISTENCY IS DIFFERENT THAN AT INLET, CONTINUE TO EJECT GROUT UNIL THE SAME GROUT CONSISTENCY OR FLUIDITY TEST VALUE IS OBTAINED. CLOSE ALL OUTLETS ONE AFTER THE OTHER IN A SIMILAR MANNER IN THE DIRECTION OF THE FLOW WITH THE EXCEPTION OF OUTLETS LOCATED AT INTERMEDIATE CRESTS. CLOSE THE DOWNSTREAM CREST OUTLETS BEFORE THE ASSOCIATED CREST OUTLET.

NORMAL GROUTING OPERATIONS WILL TYPICALLY BE PERFORMED AT APPROXIMATELY 75 PSI, AND TYPICALLY WILL NOT EXCEED:

- 145 PSI - INTERNAL POLYETHYLENE DUCTS, OVAL STEEL DUCTS, FLAT STEEL DUCTS AND EXTERNAL HIGH DENSITY POLYETHYLENE (HDPE) PIPE.

- 245 PSI - INTERNAL CIRCULAR STEEL DUCTS.

IF THE GROUTING PRESSURE EXCEEDS THE MAXIMUM ALLOWED, CLOSE THE INLET AND INJECT GROUT AT THE NEXT OUTLET THAT HAS JUST BEEN OR IS READY TO BE CLOSED, PROVIDED A ONE-WAY FLOW IS MAINTAINED. FIT THE OUTLET THAT IS TO BE USED AS THE NEW INLET WITH A POSITIVE SHUT-OFF.

TO PREVENT THE UNINTENDED LOSS OF GROUT, AFTER THE TENDON DUCT IS COMPLETELY FILLED WITH GROUT AND ALL OUTLETS HAVE BEEN CLOSED, MAINTAIN THE NORMAL GROUT PRESSURE FOR 1 MINUTE BEFORE THE INLET IS SEALED OFF UNDER PRESSURE.

1. VERTICAL GROUTING. PROVIDE A STANDPIPE AT THE UPPER END OF THE TENDON FOR ALL VERTICAL TENDONS TO COLLECT BLEED WATER TO BE REMOVED FROM THE GROUT. IF THE LEVEL OF THE GROUT DROPS BELOW THE HIGHEST POINT IN THE ANCHORAGE DEVICE ADD ADDITIONAL GROUT TO THE STANDPIPE IMMEDIATELY. REMOVE THE STANDPIPE AFTER THE GROUT HAS HARDENED. GROUTS USED FOR VERTICAL GROUTING MUST MEET THE SCHUPACK PRESSURE TESTING REQUIREMENTS. THE STANDPIPE IS A PRECAUTIONARY MEASURE AND NOT A SUBSTITUTION FOR THESE REQUIREMENTS.

IF THE GROUTING PRESSURE EXCEEDS THE MAXIMUM ALLOWED, CLOSE THE INLET AND INJECT THE GROUT AT THE NEXT HIGHER OUTLET THAT HAS JUST BEEN, OR IS READY TO BE CLOSED, PROVIDED A ONE-WAY FLOW IS MAINTAINED. ALLOW GROUT TO FLOW FROM THE OUTLET UNTIL ALL VISIBLE AIR AND WATER HAVE BEEN REMOVED BEFORE USING THAT OUTLET FOR INJECTION. GROUTING IN LIFTS MAY BE NECESSARY FOR TALL VERTICAL APPLICATIONS AS PER THE FOLLOWING PROCEDURE. GROUT THE STAY IN LIFTS UNLESS A PRIOR MOCK-UP SHOWS THAT THE STAY CAN BE SUCCESSFULLY GROUTED IN ANOTHER MANNER. THE ENGINEER MAY APPROVE GROUTING OF A STAY IN A SINGLE OPERATION IF THE CONTRACT SUBMITS INFORMATION WHICH ADEQUATELY ESTABLISHES THAT THE MATERIALS, EQUIPMENT AND PROCEDURE INTENDED FOR USE WILL NOT DAMAGE THE PIPE. THE INFORMATION MUST SHOW THAT THE GROUTING PRESSURE WILL NOT DAMAGE THE POLYETHYLENE PIPE AT -22° F AFTER THE GROUT IS CURED. IF ANY INDICATIONS OF GROUTING IRREGULARITIES APPEAR THAT ARE ATTRIBUTABLE TO SINGLE OPERATION GROUTING, DISCONTINUE THE METHOD AND USE MULTIPLE LIFT GROUTING.

5/31/2016

PENNDOT DRAWING 15-601-BDTD

COMMONWEALTH OF PENNSYLVANIA
REGISTERED PROFESSIONAL
GREGG A. REESE
ENGINEER
No. 044122R

5/20/16

CENTRAL ATLANTIC BRIDGE ASSOCIATES (CABA)	SUMMIT ENGINEERING GROUP, INCORPORATED CONSULTING STRUCTURAL ENGINEERS	10822 W. TOLLER DRIVE, STE 330 LITTLETON, CO 80127 P: 303-933-9114 www.summit-eng-group.com
COMMONWEALTH OF PENNSYLVANIA DEPARTMENT OF TRANSPORTATION		DATE: 2/27/2015
		SCALE N/A
SPLICED POST-TENSIONED CONCRETE U-GIRDER STANDARDS		DWN: GAR CH'D: MTR
		JOB NO.
GROUT SPECIFICATIONS 2		SHEET NO. 21

GROUT SPECIFICATIONS

LIFT METHOD– WATER FLUSHING IS NOT PERMITTED TO CLEAN THE PIPES AND THE WIRE OR STRAND BUNDLES.

DO NOT EXCEED GROUT LIFTS OF 125FT IN HEIGHT FOR HDPE PIPE STAY CABLES. LIMIT THE FIRST GROUT LIFT IN EACH STAY CABLE TO 20FT ABOVE THE DECK. LIMIT THE LAST LIFT OF GROUT TO THE SMALLEST DIMENSION CONSISTENT WITH THE DIMENSIONS OF THE TOWER OR PYLON. THIS MINIMIZES THE POSSIBILITY OF CREATING A GROUT VOID IN THE TOP OF THE PIPE.

INSTALL GROUT PORTS AT THE TIP AND BOTTOM OF EACH GROUT LIFT. BEGIN GROUTING AT THE LOWEST INJECTION PORT WHILE ALL VENTS REMAIN OPEN. MAINTAIN A PUMPING PRESSURE THROUGH THE PIPE UNTIL THE GROUT FLOWS FOR A MINIMUM OF 15 SECONDS OUT THE NEXT VENT HOLE AFTER NO VISIBLE WATER OR AIR ARE EJECTED. NEXT CLOSE THE VENT AND SECURELY CAP THE INJECTION PORT. AFTER THE GROUT HAS HARDENED, DRAIN OFF ANY RESIDUAL WATER ON TOP PRIOR TO BEGINNING THE NEXT GROUTING LIFT. MOVE THE GROUTING OPERATION TO THE NEXT BEGINNING THE NEXT GROUTING LIFT. MOVE THE GROUTING OPERATION TO THE NEXT HIGHER PORT AND REPEAT THE GROUTING PROCESS UNTIL THE ENTIRE STAY CABLE IS FILLED WITH GROUT.

DO NOT EXCEED DIAMETRICAL EXPANSION OF THE HDPE PIPE ABOVE 2% OF THE ORIGINAL NOMINAL DIAMETER. ELIMINATE THE DIAMETRICAL EXPANSION AT THE GROUT INJECTION POINT BY THE USE OF STEEL CLAMPS. SECURELY CLAMP THE PIPE AT THE NEXT INJECTION PORT AFTER THE PREVIOUS GROUT LIFT HARDENS BUT BEFORE PROCEEDING WITH THE NEXT GROUT LIFT.

FIT THE GROUT OUTLET FOR THE TOP LIFT WITH A STANDPIPE AT LEAST 4 FT HIGH. FILL ANY VOID REMAINING IN THE GROUT COLUMN WITHIN THE STAY CABLE FOLLOWING THE FINAL GROUT LIFT WITH GROUT. BLOW OUT WITH COMPRESSED OIL–FREE AIR ANY ACCUMULATED WATER IN THE UPPERMOST GROUT VENT BEFORE GROUTING EXISTING CAVITY. AFTER AIR–FREE GROUT FLOWS FOR A PERIOD OF 15 SECONDS, CAP THE VENT AND GROUT PORTS.

IMMEDIATELY WASH AWAY GROUT COMING IN CONTACT WITH THE OUTSIDE SURFACE OF THE STAY CABLE OR OTHER COMPONENTS.

WHEN THE GROUTING PROCESS IS COMPLETE, REMOVE GROUT PUMPING PIPES AND VENTS AND PATCH CABLE STAY SHEATHING AS NECESSARY AT VENT HOLES TO ENSURE WATER TIGHTNESS OF THE SHEATHING.

(I) QUALITY CONTROL TESTING

NOTIFY THE DEPARTMENT'S REPRESENTATIVE WHEN QUALITY CONTROL TESTING IS TO BE PERFORMED. THE ASBI CERTIFIED GROUT TECHNICIAN RUNS THE QUALITY CONTROL TESTING. THE PRODUCTION GROUT MEETS OR EXCEEDS THE REQUIREMENTS IN TABLE C.

TABLE C: QUALITY CONTROL TESTING REQUIREMENTS			
TEST	FREQUENCY	PERFORMANCE CRITERIA	TEST METHOD
GROUT STRENGTH TEST (AVERAGE OF 3 CUBES)	1 PER DAY	≥ 3,000 PSI AT 7 DAYS ≥ 5,000 PSI AT 28 DAYS	ASTM C942
FLUIDITY TEST	1 EVERY* 2 HOURS	WITHIN ± 5 SEC OF VALUES ESTABLISHED DURING LABORATORY TESTING	ASTM C939**
SCHUPACK PRESSURE BLEED TEST	1 PER DAY*	ASTM 1741	
API MUD BALANCE TEST	2 PER DAY***	VALUE SHALL BE BETWEEN THE VALUES OBTAINED DURING PRE–QUALIFICATION TESTING AND MINIMUM AND MAXIMUM WATER DOSAGE.	

* TAKEN AT THE INLET.

** USE EITHER THE STANDARD ASTM C939 FLOW CONE TEST OR THE MODIFIED TEST DEPENDING ON WHICH WAS APPROVED AND USED INITIALLY IN THE LABORATORY TESTING.

*** OR WHEN THERE IS A VISUAL OR APPARENT CHANGE IN THE CHARACTERISTICS OF THE GROUT. IN ADDITION TO THE TWO PER DAY, TAKE AN ADDITIONAL SAMPLE FROM THE DUCT OUTLET TO ENSURE THAT EXTRA WATER IS NOT PRESENT IN THE TENDON.

(J) POST–GROUTING OPERATIONS

CLEAN ALL EQUIPMENT THOROUGHLY AFTER GROUTING. DO NOT REMOVE OR OPEN THE VALVES, CAPS, AND PIPES AT THE INLET AND OUTLET UNTIL THE GROUT HAS SET. DO NOT SUBJECT GROUTED TENDONS TO VIBRATION FOR A MINIMUM OF 4 HOURS IF A PREQUALIFIED GROUT MEETING THE SECTION TESTING AND ACCEPTANCE (B) PRE–QUALIFICATION TESTING IS USED OR A MINIMUM OF 24 HOURS FOR ALL OTHER GROUTS UNLESS APPROVED BY THE ENGINEER. DO NOT OPEN INLETS, OUTLETS, OR VENTS UNTIL GROUT HAS SET. BEFORE PROTECTION OF END ANCHORAGES IS STARTED, REMOVE ALL MATERIALS USED FOR SEALING THE GROUT CAP CONNECTIONS. AT ANCHORAGES, PLUG ALL INLETS AND OUTLETS WITH PLASTIC OR STAINLESS STEEL THREADED CAPS. REPAIR ANY SPLITS, HOLES, OR OTHER DAMAGE TO EXPOSED DUCTS.

NO EARLIER THAN 24 HOURS AFTER GROUTING, PROBE AND PICK THE GROUT WITHIN ANCHORAGE OUTLETS AND ALL HIGH POINT OUTLETS TO IDENTIFY THE PRESENCE OF SOFT GROUT. SOFT GROUT IS CONSIDERED ANY GROUT THAT IS UNHARDENED. IF SOFT GROUT IS FOUND, CEASE ALL GROUTING OPERATIONS AND NOTIFY THE DEPARTMENT REPRESENTATIVE.

INSPECT THE LEVEL OF GROUT IN THE OUTLETS AND GROUT CAPS AND TOP OFF AS NECESSARY WITH FRESH GROUT AFTER 24 HOURS FROM THE FINISH OF GROUTING. FILL ANY VOIDS IMMEDIATELY WITH FRESH GROUT. USE VACUUM GROUTING PROCEDURES IF REQUIRED BY THE ASBI–CERTIFIED INSPECTOR AND AS REQUIRED BY AASHTO, IF STRANDS ARE EXPOSED.

1. INTERNAL TENDONS. FOR INTERNAL TENDONS SUBJECTED TO AGGRESSIVE ENVIRONMENTS, REMOVE TUBING 1 IN. BELOW CONCRETE SURFACE, SEAL, AND FILL WITH COMPATIBLE CEMENTITIOUS – BASED MATERIAL TO FLUSH WITH CONCRETE SURFACE.

2. EXTERNAL TENDONS. SEAL OUTLET AND INLET OPENINGS PERMANENTLY.

3. ANCHORAGES. PROTECT ANCHORAGES TO PERMANENTLY PREVENT ACCESS OF WATER OR OTHER AGGRESSIVE AGENTS. INSTALL A PERMANENT PLASTIC CAP OVER THE ANCHOR HEAD PRIOR TO GROUTING. LEAVE THIS CAP IN PLACE TO FORM PART OF THE PERMANENT PROTECTION FOR THE TENDON. FILL THE CONCRETE BLOCK–OUT WITH LOW PERMEABILITY CONCRETE OR GROUT. COAT EXPOSED GIRDER ENDS WITH APPROVED ELASTOMERIC SYSTEM HAVING THICKNESS OF 30 TO 45 MILS.

(K) RECORD OF GROUTING OPERATION

PROVIDE RECORDS OF GROUTING FOR REVIEW BY THE ENGINEER WITHIN 72 HOURS OF GROUTING. RECORD THE FOLLOWING INFORMATION:

- DATE GROUTED
- NUMBER OF DAYS FROM STRESSING TO GROUTING
- TYPE OF PREPACKAGED GROUT
- TENDON(S) GROUTED
- INJECTION END AND APPLIED GROUTING PRESSURE
- SUMMARY OF ANY PROBLEMS
- CORRECTIVE ACTION TAKEN
- MEASURE OF THE COMPLETE FILLING OF THE DUCT(S) ADJUSTED FOR THE GROUT DISPLACED BY THE PRESTRESSING STRANDS
- GROUT LOT NUMBER
- GROUT MANUFACTURE DATE
- ASBI–CERTIFIED INSPECTOR PRESENT DURING OPERATION
- QUALITY CONTROL TEST VALUES
- RESULTS OF POST–GROUTING INSPECTION
- AMBIENT AND SUBSTRATE TEMPERATURES

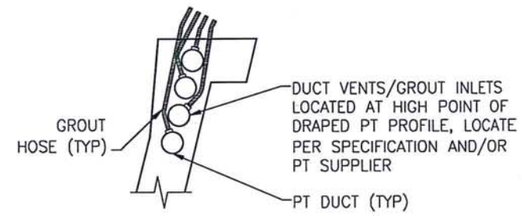

TOP DUCT VENT DETAIL

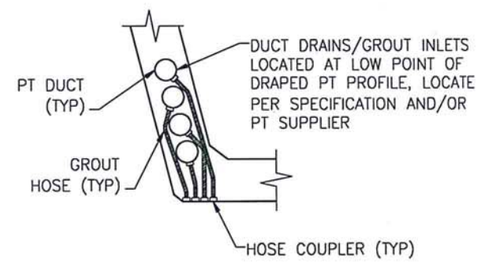

BOTTOM DUCT DRAIN DETAIL

5/31/2016

PENNDOT DRAWING 15–601–BDTD

5/20/16

COMMONWEALTH OF PENNSYLVANIA
REGISTERED PROFESSIONAL
GREGG A. REESE
ENGINEER
No. 044122R

CENTRAL ATLANTIC BRIDGE ASSOCIATES (CABA)	Summit Bridge Engineering Consulting Structural Engineers, 10622 W. TOLLER DRIVE, STE 330 LITTLETON, CO 80127 P: 303-933-9114 www.summit-eng-group.com
COMMONWEALTH OF PENNSYLVANIA DEPARTMENT OF TRANSPORTATION	DATE: 2/27/2015
	SCALE N/A
SPLICED POST–TENSIONED CONCRETE U–GIRDER STANDARDS	DWN: GAR CH'D: MTR
	JOB NO.
GROUT SPECIFICATIONS 3	SHEET NO. 22

LOAD RATING

THE ENGINEER OF RECORD SHALL PERFORM A LOAD RATING OF ALL BRIDGES DESIGNED USING SPLICED U GIRDER CONSTRUCTION, AS A PART OF THE DESIGN PROCESS, THAT SATISFIES THE REQUIREMENTS IN DM-4 CHAPTER 1.8.3. AND SECTION 4.6.3.

LOAD COMBINATIONS									
	STR I	STR IP	STR IA	STR II	SERV I		SERV III		SERV IIIA
					w/o PL	WITH PL	w/o PL	WITH PL	
γ_{DC}[1]	1.25, 0.90	1.25, 0.90	1.25, 0.90	1.25, 0.90	1.00	1.00	1.00	1.00	1.00
γ_{DW}[1]	1.50, 0.65	1.50, 0.65	1.50, 0.65	1.50, 0.65	1.00	1.00	1.00	1.00	1.00
γ_{LL}	1.75	1.35	1.35	1.35	1.00	0.80	0.80[2]	0.65[3]	1.00
γ_{PL}	–	1.75	–	–	–	1.00	–	1.00	–
γ_{PS}	1.00	1.00	1.00	1.00	1.00	1.00	1.00	1.00	1.00
$\gamma_{CR,SH}$	0.50	0.50	0.50	0.50	1.00	1.00	1.00	1.00	–
	RATING APPLICABILITY								
PERMIT VEHICLE[4]	–	–	–	OR	–		–		OR
SPECIAL VEHICLE[4]	IR	IR	–	OR	IR		IR		OR

RATING NOTES:
1. USE THE LOAD FACTOR THAT RESULTS IN THE LOWEST RATING FACTOR FOR A PARTICULAR LOAD COMBINATION.
2. γ = 1.00 FOR RATING VEHICLES, γ = 0.80 FOR PHL-93 ONLY
3. γ = 0.80 FOR RATING VEHICLES, γ = 0.65 for PHL-93 ONLY
4. REFER TO PENNDOT DESIGN MANUAL 4 FOR APPLICABLE LOAD COMBINATIONS AND RATING APPLICABILITY FOR STANDARD RATING VEHICLES (H20, HS20, ML80, P-82, PHL-93 AND TK527).

PERMIT LOAD EVALUATION

1. IN-PLANE BENDING AND VERTICAL SHEAR DUE TO A PERMIT LOAD CAN BE CALCULATED USING ANY OF THE ANALYSIS METHODS DESCRIBED IN #3 OF 'ANALYSIS TECHNIQUES FOR U-GIRDER STRUCTURES'.
2. TORSION DUE TO A PERMIT LOAD CAN BE APPROXIMATED USING THE FOLLOWING METHOD:

$$T_{PERMIT} = T_{PHL-93} \times \frac{V_{PERMIT}}{V_{PHL-93}}$$

WHERE: T_{PHL-93} = DESIGN LIVE LOAD TORQUE (OBTAINED FROM TABLE)
V_{PERMIT} = VERTICAL SHEAR DUE TO PERMIT LOAD CALCULATED IN STEP 1, INCLUDING DISTRIBUTION FACTOR CALCULATED WITHOUT CONSIDERATION OF MULTIPLE PRESENCE
V_{PHL-93} = DESIGN LIVE LOAD VERTICAL SHEAR (OBTAINED FROM TABLE OR CALCULATED USING BEAM LINE MODEL)

IT IS RECOMMENDED TO USE THE RATIO OF SHEARS FROM THE END OF THE BEAM AT ALL LOCATIONS ALONG THE LENGTH OF THE BEAM TO CALCULATE THE PERMIT LOAD TORSION. DOING SO WILL ELIMINATE ANY SPIKES THAT MAY RESULT FROM USING A RATIO OF SMALL VALUES NEAR THE LOCATIONS WHERE THE SHEAR DIAGRAM GOES THROUGH ZERO.

LIVE LOAD DISTRIBUTION FACTORS

1. THE LIVE LOAD DISTRIBUTION FACTORS FOR MOMENT AND SHEAR SHOWN ON SHEET 25 ARE CALCULATED AS A RATIO OF THE PHL-93 DESIGN TRUCK FORCE EFFECTS FROM THE GRILLAGE MODEL TO THE PHL-93 DESIGN TRUCK FORCE EFFECTS ON A SINGLE, ISOLATED GIRDER AS PER PENNDOT DM-4 ARTICLE 4.6.3.3.1 FOR 1 LANE LOADED, 2 LANES LOADED, AND 3 LANES LOADED.
2. AS AN ALTERNATIVE TO CALCULATING THE DISTRIBUTION FACTORS AS INDICATED IN STEP 1, THE AASHTO LRFD BRIDGE DESIGN SPECIFICATIONS AS SUPPLEMENTED BY PENNDOT DM-4 MAY BE USED TO DETERMINE THE LIVE LOAD DISTRIBUTION FACTORS; FOR MOST U-GIRDER STRUCTURES THE LEVER RULE IS USED TO DETERMINE THE DISTRIBUTION FACTORS FOR SHEAR AND MOMENT.

ANALYSIS TECHNIQUES FOR U-GIRDER STRUCTURES:

1. DEAD LOAD SHEARS AND MOMENTS SHALL BE CALCULATED USING ONE OF THE FOLLOWING METHODS:
   -STRAIGHT BEAM LINE WITH SPAN LENGTHS EQUAL TO THAT OF THE OUTSIDE GIRDER WEB FOR STRAIGHT GIRDERS AND CURVED GIRDERS WITH A CENTRAL ANGLE LESS THAN 12° WITHIN ONE SPAN (USING A PROGRAM SUCH AS ADAPT-ABI, PENNDOT'S CBA, LUSAS OR RISA-3D)
   -CURVED BEAM LINE MODEL WITH SPAN LENGTHS EQUAL TO THE CENTERLINE OF BEARING DISTANCES FOR THE OUTSIDE GIRDER FOR CURVED GIRDERS WITH CENTRAL ANGLE WITHIN ANY ONE SPAN BETWEEN 12° AND 34° (USING A PROGRAM SUCH AS LUSAS OR RISA-3D)
   -GRILLAGE MODEL OF THE ENTIRE STRUCTURE FOR CURVED GIRDERS WITH CENTRAL ANGLE WITHIN ANY ONE SPAN BETWEEN 12° AND 34° (USING A PROGRAM SUCH AS LUSAS OR RISA-3D)
   -FOR SPANS WITH A CENTRAL ANGLE GREATER THAN 34°, GREATER THAN 12° WITH UNUSUAL PLAN GEOMETRY, OR HIGH CURVATURE, A THREE-DIMENSIONAL ANALYSIS WITH 6 DEGREES OF FREEDOM IS REQUIRED (USING A PROGRAM SUCH AS LUSAS).

2. POST-TENSIONING FORCE EFFECTS AS WELL AS CREEP AND SHRINKAGE SHALL BE CALCULATED USING ADAPT-ABI; EFFECTS OF HORIZONTAL CURVATURE CAN BE INCLUDED BY ADDING 1/RADIUS TO THE WOBBLE FACTOR. ALTERNATIVELY, A CURVED MODEL CAN BE DEVELOPED IN LUSAS WHICH WILL CONSIDER THE HORIZONTAL CURVATURE EFFECTS WHEN CALCULATING THE POST-TENSIONING WITHOUT ADJUSTING THE WOBBLE FACTOR.

3. LIVE LOAD SHEARS AND MOMENTS SHALL BE CALCULATED USING ONE OF THE FOLLOWING METHODS AND APPLYING A DISTRIBUTION FACTOR CALCULATED ACCORDING TO AASHTO LRFD BRIDGE DESIGN SPECIFICATIONS 7TH EDITION (2014) SECTION 4 AS SUPPLEMENTED BY PENNDOT DM-4:
   -STRAIGHT BEAM LINE WITH SPAN LENGTHS EQUAL TO THAT OF THE OUTSIDE GIRDER WEB FOR STRAIGHT GIRDERS AND CURVED GIRDERS WITH A CENTRAL ANGLE LESS THAN 12° WITHIN ONE SPAN (USING A PROGRAM SUCH AS PENNDOT'S CBA, LUSAS OR RISA-3D)
   -CURVED BEAM LINE MODEL WITH SPAN LENGTHS EQUAL TO THE CENTERLINE OF BEARING DISTANCES FOR THE OUTSIDE GIRDER FOR CURVED GIRDERS WITH CENTRAL ANGLE WITHIN ANY ONE SPAN BETWEEN 12° AND 34° (USING A PROGRAM SUCH AS LUSAS OR RISA-3D)
   ALTERNATIVELY, A GRILLAGE MODEL OF THE STRUCTURE MAY BE DEVELOPED WITH THE APPROPRIATE NUMBER OF LANES LOADED TO OBTAIN MAXIMUM FORCE EFFECTS (USING A PROGRAM SUCH AS LUSAS OR RISA-3D) FOR CURVED GIRDERS WITH CENTRAL ANGLE WITHIN ANY ONE SPAN BETWEEN 12° AND 34°. DISTRIBUTION FACTORS SHALL NOT BE USED WITH THE GRILLAGE MODEL; MULTIPLE PRESENCE FACTORS SHALL BE CONSIDERED.

   A THREE-DIMENSIONAL ANALYSIS WITH 6 DEGREES OF FREEDOM IS REQUIRED FOR SPANS WITH A CENTRAL ANGLE GREATER THAN 34°, GREATER THAN 12° WITH UNUSUAL PLAN GEOMETRY, OR HIGH CURVATURE (USING A PROGRAM SUCH AS LUSAS). DISTRIBUTION FACTORS SHALL NOT BE USED WITH THE THREE-DIMENSIONAL ANALYSIS MODEL; MULTIPLE PRESENCE FACTORS SHALL BE CONSIDERED.

4. DEAD LOAD AND LIVE LOAD TORSIONS SHALL BE CALCULATED USING A CURVED BEAM LINE MODEL FOR CURVED GIRDERS WITH CENTRAL ANGLE WITHIN ANY ONE SPAN BETWEEN 12° AND 34° (USING A PROGRAM SUCH AS LUSAS OR RISA-3D).

   DEAD LOAD AND LIVE LOAD TORSIONS SHALL BE CALCULATED USING A THREE-DIMENSIONAL ANALYSIS MODEL WITH 6 DEGREES OF FREEDOM FOR SPANS WITH A CENTRAL ANGLE GREATER THAN 34°, GREATER THAN 12° WITH UNUSUAL PLAN GEOMETRY, OR HIGH CURVATURE (USING A PROGRAM SUCH AS LUSAS).

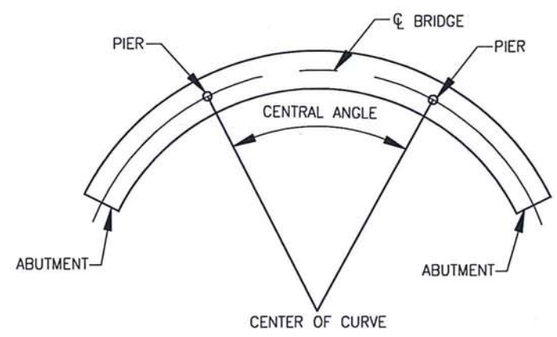

DEFINITION OF CENTRAL ANGLE

SHEAR RATING

SHEAR RATING PROCEDURE:

1. OBTAIN UNFACTORED SHEARS (ADAPT-ABI) AND TORSIONS (RISA-3D) DUE TO NON-COMPOSITE DEAD LOADS (DC1), COMPOSITE DEAD LOADS (DC2), FUTURE WEARING SURFACE (FWS), PEDESTRIAN LIVE LOAD (PL), AND PRESTRESSING LOAD (PS) AT THE DESIRED RATING LOCATION.
2. OBTAIN UNFACTORED LL+IM SHEAR (QCON) AND TORSION (RISA-3D) AT THE RATING LOCATION FOR THE DESIRED RATING VEHICLE.
3. DETERMINE THE SECTION CAPACITY (Vr) BASED ON THE AASHTO LRFD BRIDGE DESIGN SPECIFICATIONS 7TH EDITION (2014), SECTION 5.8.3.3 AS SUPPLEMENTED BY PENNDOT DM-4.
4. CALCULATE THE INVENTORY RATINGS (IR) AND THE OPERATING RATINGS (OR) USING THE STRENGTH LOAD COMBINATIONS TABULATED PREVIOUSLY AND THE EQUATION LISTED BELOW.

$$\text{RATING FACTOR (IR or OR)} = \frac{V_r - \gamma_{DC}V_{DC1} - \gamma_{DC}V_{DC2} - \gamma_{DW}V_{FWS} - \gamma_{PL}V_{PL} \mp \gamma_{PS}V_{PS}}{\gamma_{LL}V_{LL+IM}}$$

SHEAR RATING EXAMPLE:

1. UNFACTORED SHEAR AND TORSION VALUES FROM THE TABLES FOR DC1, DC2, FWS, PS AND LL+IM ARE:
   $V_{DC1+DC2}$ = $T_{DC1+DC2}$ =
   V_{FWS} = T_{FWS} =
   V_{PS} = T_{PS} =
   V_{LL+IM} = T_{LL+IM} =
2. CALCULATE MAXIMUM SHEAR IN GIRDER WEB DUE TO COMBINED EFFECTS OF SHEAR (V_i) AND TORSION (T_i IN KIP-IN) (AASHTO Eq. 5.8.2.1-7) FOR EACH LOAD EFFECT.

$$V_{i,MAX} = V_i + \frac{T_i d_s}{2A_o}$$

WHERE: d_s = WEB HEIGHT BETWEEN SHEAR FLOW PATHS IN TOP AND BOTTOM SLABS (IN)
A_o = AREA ENCLOSED BY SHEAR FLOW PATH INCLUDING ANY AREA OF HOLES (IN^2)

3. CALCULATE SHEAR CAPACITY ACCORDING TO AASHTO LRFD BRIDGE DESIGN SPECIFICATIONS 7TH EDITION (2014) AS SUPPLEMENTED BY PENNDOT DM-4.
   $V_r = \phi_v V_n$
4. CALCULATE RATING FACTOR USING EQUATION SHOWN IN STEP 4 OF THE RATING PROCEDURE AND SUBSTITUTING IN THE MAXIMUM SHEARS INCLUDING THE EFFECTS OF TORSION CALCULATED IN (2).

5/20/16

5/31/2016

COMMONWEALTH OF PENNSYLVANIA
REGISTERED PROFESSIONAL
GREGG A. REESE
ENGINEER
No. 044122R

PENNDOT DRAWING 15-601-BDTD

CENTRAL ATLANTIC BRIDGE ASSOCIATES (CABA)	Summit Consulting Structural Engineers — 10822 W. TOLLER DRIVE, STE 330, LITTLETON, CO 80127, P: 303-933-9114, www.summit-eng-group.com
COMMONWEALTH OF PENNSYLVANIA DEPARTMENT OF TRANSPORTATION	DATE: 2/27/2015
	SCALE N/A
SPLICED POST-TENSIONED CONCRETE U-GIRDER STANDARDS	DWN: GAR CH'D: MTR
	JOB NO.
RATING PROCEDURE AND NOTES – 1	SHEET NO. 23

LOAD RATING, CONT.

ALLOWABLE STRESS RATING

ALLOWABLE CONCRETE STRESS RATING PROCEDURE:

1. OBTAIN UNFACTORED VERTICAL BENDING MOMENTS (ADAPT-ABI) DUE TO NON-COMPOSITE DEAD LOADS (DC1), COMPOSITE DEAD LOADS (DC2), FUTURE WEARING SURFACE (FWS), PEDESTRIAN LIVE LOAD (PL), AND PRESTRESSING LOAD AT THE DESIRED RATING LOCATION. PEDESTRIAN LIVE LOAD HAS NOT BEEN CONSIDERED IN THIS EXAMPLE.
2. OBTAIN UNFACTORED LL+IM MOMENTS (QCON) AT THE DESIRED LOCATION FOR THE DESIRED RATING VEHICLE .
3. DETERMINE BENDING STRESSES, fb, USING APPROPRIATE SECTION MODULUS FROM THE SECTION PROPERTY TABLES FOR THE SERVICE LIMIT STATE. THE CONCRETE DECK IS CONSIDERED EFFECTIVE IN BOTH POSITIVE AND NEGATIVE FLEXURE.
4. DETERMINE THE SECTION CAPACITY (fr) BASED ON THE AASHTO LRFD BRIDGE DESIGN SPECIFICATIONS 7TH EDITION (2014), SECTION 5.9.4.2 AS SUPPLEMENTED BY PENNDOT DM-4.
5. CALCULATE THE INVENTORY RATINGS (IR) AND THE OPERATING RATINGS (OR) USING THE SERVICE LOAD COMBINATIONS TABULATED PREVIOUSLY AND THE EQUATION LISTED BELOW.

$$\text{RATING FACTOR (IR or OR)} = \frac{f_r - f_{DC1} - f_{DC2} - f_{FWS} - f_{PL} \mp f_{PS}}{f_{LL+IM}}$$

ALLOWABLE CONCRETE STRESS RATING EXAMPLE:

1. ASSUMED RATING VEHICLE: PHL-93 RATING LOCATION: AT PIER 2
2. UNFACTORED MOMENT VALUES FROM THE TABLES FOR DC1, DC2, FWS, PS, CR/SH/L, LL+IM AND PL ARE:
   $M_{DC1+DC2}$ =
   M_{FWS} =
   M_{PS} =
   $M_{CR+SH+L}$ =
   M_{LL+IM} =
   M_{PL} =
3. DETERMINE BENDING STRESSES USING APPROPRIATE SECTION MODULUS FROM SECTION PROPERTY TABLES FOR THE SERVICE LIMIT STATE [(+) INDICATES TENSION, (-) INDICATES COMPRESSION].

$$f_{DC1+DC2,t} = \frac{M_{DC1+DC2} y_{top}}{I_c} \qquad f_{DC1+DC2,b} = \frac{M_{DC1+DC2} y_{bot}}{I_c}$$

$$f_{PS,t} = \frac{-P}{A_g} + \frac{M_{PS} y_{top}}{I_c} \qquad f_{PS,b} = \frac{-P}{A_g} + \frac{M_{PS} y_{bot}}{I_c}$$

$$f_{CR+SH+L,t} = \frac{M_{CR+SH+L} y_{top}}{I_c} \qquad f_{CR+SH+L,b} = \frac{M_{CR+SH+L} y_{bot}}{I_c}$$

$$f_{TOTAL,t} = f_{DC1+DC2,t} + f_{PS,t} + f_{CR+SH+L,t}$$

$$f_{TOTAL,b} = f_{DC1+DC2,b} + f_{PS,b} + f_{CR+SH+L,b}$$

$$f_{LL+IM,t} = \frac{M_{LL+IM} y_{top}}{I_c} \qquad f_{LL+IM,b} = \frac{M_{LL+IM} y_{bot}}{I_c}$$

4. ALLOWABLE CONCRETE STRESSES FROM DM-4 TABLE 5.9.4.3P-1:
   FINAL STRESS UNDER DESIGN DEAD LOAD AND PRESTRESSING
   COMPRESSION STRESSES: $f_{rc} = 0.4f'_c$
   FINAL STRESS UNDER DESIGN LOADS
   COMPRESSION STRESSES: $f_{rc} = 0.6f'_c$
   TENSION STRESSES: $f_{rt} = 0.80 \times 0.24\sqrt{f'_c}$ (CONTINUOUS SPANS)
   $f_{rt} = 0.0948\sqrt{f'_c}$ (SIMPLE SPANS)
   $f_{rt} = 0.0948\sqrt{f'_c}$ (SPLICES, WHERE f'_c IS THAT OF THE SPLICE CONCRETE)
   FINAL STRESS UNDER LIVE LOAD + ½ (DEAD LOAD + PRESTRESSING)
   COMPRESSION STRESSES: $f_{rc} = 0.4f'_c$
5. CALCULATE RATINGS USING EQUATION LISTED IN STEP 5 ABOVE.

PRINCIPAL TENSION STRESS RATING

PRINCIPAL TENSION STRESS RATING PROCEDURE:

1. OBTAIN UNFACTORED SHEARS (ADAPT-ABI) AND TORSIONS (RISA-3D) DUE TO NON-COMPOSITE DEAD LOADS (DC1), COMPOSITE DEAD LOADS (DC2), FUTURE WEARING SURFACE (FWS), PEDESTRIAN LIVE LOAD (PL) AND PRESTRESSING (INCLUDING THE EFFECTS OF CREEP AND SHRINKAGE) LOAD AT THE DESIRED RATING LOCATION. PEDESTRIAN LIVE LOAD HAS NOT BEEN CONSIDERED IN THIS EXAMPLE.
2. OBTAIN UNFACTORED LL+IM SHEAR (QCON) AND TORSION (RISA-3D) AT THE RATING LOCATION FOR THE DESIRED RATING VEHICLE.
3. DETERMINE TORSIONAL SHEAR USING AASHTO EQ. 5.8.2.1-7 FOR EACH LOAD COMPONENT. DETERMINE TOTAL SHEAR BY ADDING THE TORSIONAL SHEAR TO THE VERTICAL SHEAR FOR EACH LOAD COMPONENT.
4. DETERMINE THE SHEAR STRESS ON THE SECTION DUE TO EACH LOAD COMPONENT USING THE EQUATION $\tau = VQ/It$, WHERE IS THE TOTAL SHEAR, Q IS THE STATICAL MOMENT OF AREA, I IS THE MOMENT OF INERTIA AND t IS THE THICKNESS OF MATERIAL.
5. DETERMINE THE AXIAL STRESS (σ) DUE TO DEAD LOADS, PRESTRESSING/POST-TENSIONING AND CREEP AND SHRINKAGE ON THE SECTION FROM ADAPT-ABI.
6. CALCULATE THE PRINCIPAL STRESS FOR EACH LOAD COMPONENT USING THE FOLLOWING EQUATION $\sigma_P = \sqrt{((\sigma/2)^2 + \tau^2)} + \sigma/2$.
7. DETERMINE THE ALLOWABLE PRINCIPAL STRESS BASED ON THE AASHTO LRFD BRIDGE DESIGN SPECIFICATIONS 7TH EDITION (2014), SECTION 5.9.4.2 AS SUPPLEMENTED BY PENNDOT DM-4.

$$\text{RATING FACTOR (IR or OR)} = \frac{\sigma_{Pr} - \sigma_{PDC1} - \sigma_{PDC2} - \sigma_{PFWS} - \sigma_{PPL} - \sigma_{PPS}}{\sigma_{PLL+IM}}$$

PRINCIPAL TENSION STRESS RATING EXAMPLE:

1. UNFACTORED SHEAR AND TORSION VALUES FROM THE TABLES FOR DC1, DC2, FWS, PS AND LL+IM ARE:
   $V_{DC1+DC2}$ = $T_{DC1+DC2}$ =
   V_{FWS} = T_{FWS} =
   V_{PS} = T_{PS} =
   V_{LL+IM} = T_{LL+IM} =
2. DETERMINE TORSIONAL SHEAR USING THE SECOND COMPONENT OF AASHTO EQ. 5.8.2.1-7 FOR EACH LOAD COMPONENT.
   $V_{Ti} = \frac{T_i d_s}{2A_o}$
3. DETERMINE TOTAL SHEAR BY ADDING THE TORSIONAL SHEAR (V_{Ti}) TO THE VERTICAL SHEAR (V_i) FOR EACH LOAD COMPONENT.
   $V_T = V_i + V_{Ti}$
4. DETERMINE THE SHEAR STRESS ON THE SECTION FOR EACH LOAD COMPONENT.
   $\tau = V_T Q/It$
   SUM UP SHEAR STRESSES FOR DEAD LOADS, PRESTRESSING/POST-TENSIONING AND CREEP AND SHRINKAGE.
5. DETERMINE THE AXIAL STRESS (σ) DUE TO DEAD LOADS, PRESTRESSING/POST-TENSIONING AND CREEP AND SHRINKAGE ON THE SECTION FROM ADAPT-ABI.
6. CALCULATE THE PRINCIPAL STRESS FOR EACH LOAD COMPONENT USING THE FOLLOWING EQUATION $\sigma_P = \sqrt{((\sigma/2)^2 + \tau^2)} + \sigma/2$.
7. DETERMINE THE ALLOWABLE PRINCIPAL STRESS BASED ON THE AASHTO LRFD BRIDGE DESIGN SPECIFICATIONS 7TH EDITION (2014), SECTION 5.9.4.2 AS SUPPLEMENTED BY PENNDOT DM-4.
   $\sigma_{Pr} = 0.11\sqrt{f'_c}$
8. CALCULATE RATING FACTOR USING FORMULA IN STEP 7 OF THE RATING PROCEDURE.

MOMENT RATING

MOMENT RATING PROCEDURE:

1. OBTAIN UNFACTORED VERTICAL BENDING MOMENTS (ADAPT-ABI) DUE TO NON-COMPOSITE DEAD LOADS (DC1), COMPOSITE DEAD LOADS (DC2), FUTURE WEARING SURFACE (FWS), PEDESTRIAN LIVE LOAD (PL), AND PRESTRESSING LOAD (PS) AT THE DESIRED RATING LOCATION. PEDESTRIAN LIVE LOAD HAS NOT BEEN CONSIDERED IN THIS EXAMPLE.
2. OBTAIN UNFACTORED LL+IM MOMENTS (QCON) AT THE DESIRED LOCATION FOR THE DESIRED RATING VEHICLE.
3. DETERMINE THE SECTION CAPACITY (Mr) BASED ON THE AASHTO LRFD BRIDGE DESIGN SPECIFICATIONS 7TH EDITION (2014) AS SUPPLEMENTED BY PENNDOT DM4.
4. CALCULATE THE INVENTORY RATINGS (IR) AND THE OPERATING RATINGS (OR) USING THE STRENGTH LOAD COMBINATIONS TABULATED PREVIOUSLY AND THE EQUATION LISTED BELOW.

$$\text{RATING FACTOR (IR or OR)} = \frac{M_r - \gamma_{DC} M_{DC1} - \gamma_{DC} M_{DC2} - \gamma_{DW} M_{FWS} - \gamma_{PL} M_{PL} \mp \gamma_{PS} M_{PS}}{\gamma_{LL} M_{LL+IM}}$$

NEGATIVE MOMENT RATING EXAMPLE:

1. UNFACTORED MOMENT VALUES FROM THE TABLES FOR DC1, DC2, FWS, PS, LL+IM AND PL ARE:
   $M_{DC1+DC2}$ =
   M_{FWS} =
   M_{PS} =
   M_{LL+IM} =
   M_{PL} =
2. NEGATIVE FLEXURAL CAPACITY CALCULATED ACCORDING TO AASHTO LRFD BRIDGE DESIGN SPECIFICATIONS 7TH EDITION (2014) AS SUPPLEMENTED BY PENNDOT DM-4. DECK REINFORCEMENT IS INCLUDED IN THE NEGATIVE MOMENT CAPACITY CALCULATIONS PER DM-4 ARTICLE 5.14.1.4.1.
   $M_r = \phi_f M_n$
3. CALCULATE RATINGS USING EQUATION LISTED IN STEP 4 OF THE RATING PROCEDURE.

POSITIVE MOMENT RATING EXAMPLE:

1. UNFACTORED MOMENT VALUES FROM THE TABLES FOR DC1, DC2, FWS, PS, LL+IM AND PL ARE:
   $M_{DC1+DC2}$ =
   M_{FWS} =
   M_{PS} =
   M_{LL+IM} =
   M_{PL} =
2. POSITIVE FLEXURAL CAPACITY CALCULATED ACCORDING TO AASHTO LRFD BRIDGE DESIGN SPECIFICATIONS 7TH EDITION (2014) AS SUPPLEMENTED BY PENNDOT DM-4.
   $M_r = \phi_f M_n$
3. CALCULATE RATINGS USING EQUATION LISTED IN STEP 4 OF THE RATING PROCEDURE.

5/31/2016

PENNDOT DRAWING 15-601-BDTD

5/20/16

COMMONWEALTH OF PENNSYLVANIA
REGISTERED PROFESSIONAL
GREGG A. REESE
ENGINEER
No. 044122R

CENTRAL ATLANTIC BRIDGE ASSOCIATES (CABA)	Summit Design and Engineering Services, Consulting Structural Engineers — 10822 W. TOLLER DRIVE, STE 330, LITTLETON, CO 80127, P: 303-933-9114, www.summit-eng-group.com	
COMMONWEALTH OF PENNSYLVANIA DEPARTMENT OF TRANSPORTATION	DATE: 2/27/2015	
	SCALE N/A	
SPLICED POST-TENSIONED CONCRETE U-GIRDER STANDARDS	DWN: GAR	CH'D: MTR
	JOB NO.	
RATING PROCEDURE AND NOTES – 2	SHEET NO. 24	

UNFACTORED MOMENTS (KIP-FT) (LEFT GIRDER G1)

LOAD CASE	SPAN 1											SPAN 2				
	CL. BRG. ABUT. 1	0.1	0.2	0.3	0.4	0.5	0.6	0.7	0.8	0.9	CL BRG. PIER 1	0.1	0.2	0.3	0.4	0.5
DC1	0	2915	4829	5736	5637	4531	2419	-700	-4838	-10041	-16369	-6966	222	5330	8399	9425
DC2	0	424	689	818	804	649	353	-85	-664	-1384	-2244	-959	42	758	1188	1332
DW	0	347	564	670	658	531	289	-69	-543	-1132	-1836	-785	34	620	972	1089
PS	-2838	-4840	-6069	-6534	-6229	-5091	-3068	1124	3812	9511	13206	8062	-517	-7238	-10033	-11052
PHL-93 (LL+IM) (+)	0	3373	5820	7361	8075	8079	7345	5926	3949	1617	651	1538	4370	7201	8991	9569
PHL-93 (LL+IM) (-)	0	-698	-1402	-2106	-2809	-3511	-4211	-5998	-6849	-7782	-9944	-5008	-3241	-2536	-2246	-1955
P-82 (LL+IM) (+)	0	4059	6932	8682	9346	9094	8348	6724	4363	1439	1308	1691	5354	8200	9979	10443
P-82 (LL+IM) (-)	0	-741	-1489	-2236	-2982	-3727	-4471	-5212	-5952	-6689	-7424	-3987	-3408	-2825	-2239	-1651

UNFACTORED SHEARS (KIP) (LEFT GIRDER G1)

LOAD CASE	SPAN 1											SPAN 2				
	CL. BRG. ABUT. 1	0.1	0.2	0.3	0.4	0.5	0.6	0.7	0.8	0.9	CL BRG. PIER 1	0.1	0.2	0.3	0.4	0.5
DC1	213	150	88	25	-37	-100	-163	-225	-290	-358	-431	462	361	268	178	89	0
DC2	26	26	17	8	-1	-10	-18	-27	-36	-45	-54	56	56	44	31	19	6
DW	22	22	14	7	-1	-8	-15	-22	-29	-37	-44	46	46	36	26	15	5
PS	-130	-79	-28	23	78	134	189	230	384	238	238	-240	-406	-259	-139	-45	45
PHL-93 (LL+IM) (+)	210	210	172	134	97	61	43	29	17	7	4	273	273	231	187	142	96
PHL-93 (LL+IM) (-)	-44	-44	-44	-54	-71	-89	-123	-159	-194	-228	-260	-13	-13	-13	-22	-36	-54
P-82 (LL+IM) (+)	253	253	211	171	133	99	68	40	16	8	8	295	295	260	220	179	136
P-82 (LL+IM) (-)	-46	-46	-46	-46	-64	-106	-147	-187	-224	-259	-290	-26	-26	-26	-28	-60	-96

UNFACTORED TORSIONS (KIP-FT) (LEFT GIRDER G1)

LOAD CASE	SPAN 1											SPAN 2				
	CL. BRG. ABUT. 1	0.1	0.2	0.3	0.4	0.5	0.6	0.7	0.8	0.9	CL BRG. PIER 1	0.1	0.2	0.3	0.4	0.5
DC1	154	154	93	-9	-130	-248	-344	-395	-380	-278	-66	352	352	561	554	394	141
DC2	27	27	18	4	-30	-44	-51	-50	-36	-6	51	51	80	78	56	20	-20
DW	22	22	15	3	-25	-36	-42	-41	-29	-5	42	42	65	64	46	16	-16
PS	-	-	-	-	-	-	-	-	-	-	-	-	-	-	-	-	-
PHL-93 (LL+IM) (+)	504	504	449	352	91	20	31	125	241	373	552	552	609	544	389	199	65
PHL-93 (LL+IM) (-)	-294	-294	-279	-250	-147	-167	-259	-355	-407	-403	-316	-316	-223	-155	-114	-65	-199
P-82 (LL+IM) (+)	581	581	520	407	123	33	41	133	255	395	584	584	654	597	446	250	96
P-82 (LL+IM) (-)	-315	-315	-299	-268	-160	-176	-314	-418	-466	-446	-329	-329	-210	-141	-127	-96	-250

GIRDER SECTION PROPERTIES

		SPAN 1										℄ BRG. PIER 1	SPAN 2				
		℄ BRG. ABUT. 1	0.1	0.2	0.3	0.4	0.5	0.6	0.7	0.8	0.9		0.1	0.2	0.3	0.4	0.5
NC	A (IN^2)	2644	2644	2644	2644	2644	2644	2644	2644	2872	3108	3349	2989	2644	2644	2644	2644
NC	$S_{X,T}$ (IN^3)	59109	59109	59109	59109	59109	59109	59109	59109	60815	61528	61652	61266	59109	59109	59109	59109
NC	$S_{X,B}$ (IN^3)	59807	59807	59807	59807	59807	59807	59807	59807	69328	76911	82579	73362	59807	59807	59807	59807
NC	J (IN^4)	3585503	3585503	3585503	3585503	3585503	3585503	3585503	3585503	3645617	3665067	3678152	3657727	3585503	3585503	3585503	3585503
COMP.	A (IN^2)	3749	3749	3749	3749	3749	3749	3749	3749	3977	4213	4454	4094	3749	3749	3749	3749
COMP.	$S_{X,T}$ (IN^3)	120237	120237	120237	120237	120237	120237	120237	120237	124272	126364	127193	125512	120237	120237	120237	120237
COMP.	$S_{X,B}$ (IN^3)	74265	74265	74265	74265	74265	74265	74265	74265	86565	97169	105987	92084	74265	74265	74265	74265
COMP.	J (IN^4)	5306695	5306695	5306695	5306695	5306695	5306695	5306695	5306695	5489421	5570747	5615558	5535641	5306695	5306695	5306695	5306695

UNFACTORED REACTIONS (KIPS)

LOAD CASE	LEFT GIRDER G1			
	ABUT. 1	PIER 1	PIER 2	ABUT. 2
DC1	213.1	976.7	976.7	213.1
DC2	30.0	119.2	119.2	30.0
DW	24.5	97.5	97.5	24.5
PT	−130	−478	−478	−130
PHL−93 (LL+IM) (+)	240.2	293.6	293.6	240.2
PHL−93 (LL+IM) (−)	−43.5	−14.0	−14.0	−43.5
P−82 (LL+IM) (+)	294.2	200.9	200.9	294.2
P−82 (LL+IM) (−)	−46.2	−21.3	−21.3	−46.2

PHL−93 MOMENT DISTRIBUTION FACTOR

LOCATION		1 LANE	2 LANES	3 LANES
+Mmax	SPAN 1 (0.4L)	1.35	1.78	1.60
−Mmax	PIER 1	1.28	1.71	1.57
+Mmax	SPAN 2 (0.5L)	1.35	1.78	1.61
−Mmax	PIER 2	1.28	1.71	1.57
+Mmax	SPAN 3 (0.6L)	1.35	1.78	1.60

PHL−93 SHEAR DISTRIBUTION FACTOR

LOCATION	1 LANE	2 LANES	3 LANES
ABUTMENT 1	1.23	1.57	1.50
PIER 1	1.18	1.60	1.47
PIER 2	1.18	1.61	1.48
ABUTMENT 2	1.23	1.57	1.49

NOTE:

1. THESE RATIOS ARE INTENDED FOR FUTURE USE TO OBTAIN EQUIVALENT PHL−93 DESIGN LIVE LOAD MOMENTS AND SHEARS FROM PHL−93 SIMPLIFIED ANALYSIS MOMENTS AND SHEARS FOR THE HORIZONTALLY CURVED GIRDERS.

NOTES:

1. VALUES ASSUMED SYMMETRIC AROUND ℄ OF SPAN 2. TORSION VALUES ARE OF OPPOSITE SIGN ON OTHER SIDE OF ℄.
2. NON−COMPOSITE SECTION PROPERTIES INCLUDE THE LID SLAB.

DC1 = WEIGHT OF GIRDER AND DECK CONCRETE
DC2 = WEIGHT OF BARRIER AND SUPERIMPOSED DEAD LOAD
DW = WEIGHT OF FUTURE WEARING SURFACE
TOTAL DEAD LOAD = DC1 + DC2 + DW

5/31/2016

5/20/16

COMMONWEALTH OF PENNSYLVANIA
REGISTERED PROFESSIONAL
GREGG A. REESE
ENGINEER
No. 044122R

PENNDOT DRAWING 15−601−BDTD

CENTRAL ATLANTIC BRIDGE ASSOCIATES (CABA)

10822 W. TOLLER DRIVE, STE 330
LITTLETON, CO 80127
P: 303−933−8114
www.summit−eng−group.com

COMMONWEALTH OF PENNSYLVANIA
DEPARTMENT OF TRANSPORTATION

SPLICED POST−TENSIONED CONCRETE U−GIRDER STANDARDS

MOMENTS, SHEARS, TORSIONS, AND REACTIONS

DATE: 2/27/2015
SCALE N/A
DWN: GAR CH'D: MTR
JOB NO.
SHEET NO. 25

Product:

Item 9000-7009 - Metal Foundations for Conventional Lighting Pole
Shaner Industries
PennDOT Drawing #99-034 PE, Rev. 2

Approval Date:	**Initiated By SOL:**
October 6, 2016	483-16-06

Application/Use:
Metal Foundations for Conventional Lighting Pole manufactured by Shaner Industries of Ambridge, PA have been approved to be used as an "alternate" to drilled concrete caissons as specified on the attached standard drawing.

The usage of Metal Foundations for Conventional Pole has the following restriction:

- Maximum Pole Height: 50 feet

This foundation meets both AASHTO and Design Manual, Part 4 design criteria.

Specifications:
Design/Material/Construction Specifications for this foundation are specified on PennDOT Drawing #99-034 PE, Rev. 2 dated October 6, 2016 of Metal Foundations for Conventional Lighting Poles for your use.

Standard Drawing:
Attached is a copy of the Design/Material/Construction Specifications and Standard Detail Drawing PADOT #99-034 PE, Rev. 2, dated October 6, 2016 for Conventional Lighting Poles for your use.

Comment:
On those projects permitting the use of this metal foundation as an alternate, a special provision should be included in the proposal to indicate that the "Metal Foundations for Conventional Lighting Pole" as an alternate is allowed.

The contractor will be required to revise the pertinent contract drawings as per DM-4M, PP 1.10 to show the usage of "Metal Foundations for Conventional Lighting Pole" and will also be required to reimburse the Department a fee of $1000 per design for the review and approval of the revision. This should be specified in the contract's Special Provision.

FHWA approval has been secured for Metal Foundations for Conventional Lighting Pole.

This product under the "Metal Foundations, LLC" name was previously approved by the Department on June 22, 2009.

This product under the "SAFE Foundations" name was initially approved by the Department on June 10, 1999.

SHANER INDUSTRIES, LLC
METAL FOUNDATIONS
DESIGN SPECIFICATIONS.

1. General:

A. PENNDOT drawing 99-034-PE sheets 1 and 2, provide the design, fabrication and installation criteria for use of standard-sized Metal Foundations (MF) as alternates to the standard-sized concrete foundations shown on table A of PENNDOT Drawing RC-80M, Sheets 1 of 2, for support of Conventional Lighting Poles.

B. Shaner Industries, takes full responsibility for engineering theory and calculations correctness and ensuring documents either by needed details or construction specifications.

2. Design:

A. The design assumptions and calculations for the standard-sized foundations shown on Sheet 2 of PADOT Drawing #99-034 PE are presented in the GAI Report dated May 6, 1999 for Product Evaluation PE # 99-034, GAI Project 93-503-51.

B. The calculations demonstrate that the Shaner MF foundations have the same structural capacity to resist loads imposed by conventional light poles as the concrete foundations they replace.

C. Changes to the design can not be made unless Shaner Industries designs the changes and the Chief Bridge Engineer approves the changes.

3. Use Guidelines:

A. The use of MF foundations should consider any site conditions that could effect these foundations including but not limited to obstructions, voids, rock interference, and buried conduits or pipelines having cathodic protections.

B. Obtain the approval of the Distric Bridge and Geotechnical Engineers before incorporating the Shaner Foundations into a project.

SHANER INDUSTRIES, LLC.
METAL FOUNDATIONS
CONSTRUCTION SPECIFICATIONS.

1. Description:

This work includes the furnishing, constructing and installing of galvanized metal foundations.

2. Materials:

A. General- Provide materials and workmanship in accordance with the effective Pennsylvania Department of Transportation Specifications, Publication 408 Section (910, 1101 and 1105) and special conditions as specified in the contract documents and on the construction drawings.

Pipe - Section 1105.02 (A) 2.a, A500 (Grade B).
Plate - Section 1105.02(a) 2 & (A) 3.c, ASTM A709 or ASTM A572 (Grade 50).
Bolts, Nuts and Washers - Section 1101.04 or Section 1105.02(d), ASTM A194 (GR. 2H), ASTM F436. Galvanized and as required by pole manufacturer.
Galvanizing - Section 1105.02(s), ASTM A123 AND ASTM A153.
Welding Materials - Section 1105.03(m), except use effective ANSI/AWS D1.1 for tubular sections.

B. Certifications - Section 106.03(b)3.

3. Fabrication:
Section 1105.03, ASTM and effective ANSI/AWS D1.1 as applicable. Fabricate the foundations to the minimum material thickness and dimensions shown on the drawings. Angles of welded structural connections shall be correct to within plus or minus 1 degree. Fabrication, finishing and bolt holes in accordance with Sections 1101 and 1105. Bolt holes shall be factory installed unless otherwise permitted by the Engineer.

4. Construction:

As shown on the standard drawings, approved by the Department and as follows:

A. General - Install the foundation in conformity with the lines, grades, fin orientations, dimensions and locations as shown on the approved drawings according to the contract documents.

Unless otherwise indicated, install the foundations in accordance with Section 1006.3(a) to within a plumbness tolerance equal to 2 percent of the foundation length and within 3 inch of the planned locations. Orient the foundations so that the anchor bolts and fins are within 2 degrees of their planned orientation, unless otherwise permitted by the Engineer. Install anchor bolts using a template equivalent to the base plate of the planned structure so that the center of the completed anchor bolt pattern is within 0.25 inches of the center of the top plate of the foundation. Install anchor bolt pattern to within 2 degrees of planned orientation, unless otherwise permitted by the Engineer.

Any damage to the galvanizing during handling or delivery or bolt hole drilling should be repaired in accordance with Section 1105.02(e).

B. Installation.

Anchor Method (B.1):
Drill a vertical hole, plumb and in the location of the required installed foundation as shown on the construction drawings. The diameter of the completed auger hole shall be no greater than the outside diameter of the required foundation pipe column. Field verify that the completed hole diameter is not larger than the outside diameter of the pipe column. Auger the hole a minimum of two feet deeper than the depth of the bottom of the installed foundation. Record the soil type and classification on the installation report. Install foundation immediately after auger hole is completed.
If rock or obstructions are encountered above the design tip elevation of the foundation, contact the Engineer. If necessary, install the foundation at an alternative location acceptable to the Engineer or replace it with a conventional concrete foundation at the original location, as directed by the Engineer at no additional cost to the Department. Modification of the foundation to accommodate obstructions will not be permitted.
Contact the Engineer if soil conditions are different from those used for the foundation design or if the pre-augered hole collapses. If the pre-augered hole collapses, that location is rejected.
Lower the installing anchor into the hole and place a centering collar in the hole, around the anchor. Place hydraulic cylinders over the anchor rod, on top of the anchor housing and lock into place with the high strength nut. Expand the hydraulic cylinders to the maximum required rod extension or hydraulic pressure for the installation anchor in use. Secure the anchor lock nut against the anchor housing. Remove the hydraulic cylinders and the centering collar. Record the anchor length, installation pressure and rod extension on the installation log.
Extend the high strength anchor rod to accommodate the total length of the foundation and the hydraulic cylinders. Lift the foundation into position over the installation anchor. Foundation fin orientation must conform to the construction drawings. Position hydraulics on top of the foundation, attach to the anchor rod and lock into position with the high strength nut. Check and adjust orientation, alignment, plumbness and level of the foundation before the first stroke of the cylinders.
Expand the hydraulic cylinders in order to push the foundation into the earth. This may require several strokes of the cylinders to reach the proper elevation. Record the foundation installing forces on the installation report for each one foot of depth below the ground surface.
Release the anchor lock nut, remove the hydraulics and drop the anchor expanding cone below the anchor plates. Withdraw the installing anchor through the foundation column. The soils removed during the auger/drilling operations are then backfilled into the core of the metal foundation to a compacted condition acceptable to the representative. Incorporate installation of conduit and grounding connections, as appropriate.
The structure may be bolted to the foundation immediately after the foundation is installed, back-filled and approved by the inspector. Use the bolts or studs, washers, lock washers and nuts as specified and/or shown on the approved contract drawings.
When additional anchors are required to install the foundation, install the satellite anchors no closer than eight satellite hole diameters from the center of the foundation in the manner as the main anchor. Attach the anchors to spreader beams positioned above the hydraulic cylinders. Expand the cylinders against the beam that employ the resistance of the multiple anchors to install the foundation.
Remove the satellite anchors. Backfill and compact the satellite anchors holes using the material that was removed during the drilling operations. Tamp the back-fill in 4-inch lift to a stable condition equal to or greater than the density of the soil before the excavation.
Observe the installation of the foundation during the entire installation process. If obstructions are encountered that displace the foundation laterally or alter its vertical alignment from that of the predrilled hole, remove and inspect the foundation for damage. If the foundation is not damaged, either reinstall at an alternative location acceptable to the Engineer or replace it with a conventional concrete foundation at the original location, if directed by the Engineer. Field modifications of foundations are not permitted.

Vibratory Method (B.2):
a) Equipment:
The size of the hydraulic vibratory hammer to be used for the installation of the metal foundation system is dependent on the design parameters of the metal foundation as well as the geotechnical soils condition of the intended project site. Normally the driving force of the hydraulic vibratory hammer during installation of the metal foundations is between 45 tons to 65 tons; occasionally hydraulic vibratory hammers with a driving force up to 100 tons are utilized.
The type of hydraulic vibratory hammer used for the installation of the metal foundation system will depend on the type of equipment that the hydraulic vibratory hammer will be attached to during installation such as ABI Mobilram MultiPurpose Machines, Excavators with built-in hydraulic capacity as well as self propelled hydraulic cranes in the 40 ton to 70 ton range. The Metal Foundation Adapter (MFA) is utilized to attach the metal foundation to the hydraulic vibratory hammer for proper installation. The MFA is engineered and designed for the specific project metal foundation(s) to be installed and is furnished with the metal foundation(s).

b) Predrilling of Soils:
Predrilling of the soils may be required depending on site specific data from the geotechnical report or if load testing of the metal foundation is specified. Predrilling may also be utilized to reduce the tonnage size of the hydraulic vibratory hammer to accommodate certain types of equipment based on jobsite conditions. Any soil spoils produced from the drilling operations will be placed back into the core of the metal foundation and will not require the soils to be hauled away.
c) Installation:
The MFA described above is bolted to the metal foundation which then enables the hydraulic vibratory hammer to be connected to the MFA to lift the metal foundation into position for the installation. This method of connection enables the metal foundation to be oriented, aligned and plumbed before activating the hydraulic vibratory hammer to begin the installation of the metal foundation. During the installation process the vibratory system is interrupted periodically to monitor vertical alignment and orientation. The installation of the metal foundation is considered complete once the metal foundation has reached the design depth below grade; the MFA is then removed from the metal foundation and prepared to be mounted to another metal foundation for installation.

Testing procedures (B.3):
This testing procedure is to apply only and exclusively to the Metal Foundations vibratory method of installation described in paragraph (B.2). Upon installation of the new metal foundations, a compression load test will be performed to verify the design axial capacity of the Metal Foundation in accordance with PENNDOT Publication 408, Section 1005.3 (g) 1.
The foundation will be subject to a compression force up to its axial design load, held for thirty (30) minutes and verified that no settlement is recorded, the compressive force will then be increased up to 125% of the design axial load, held for thirty (30) minutes and verified that no more than 0.25 inches of penetration is recorded. Any value exceeding the allowables will be considered test failure.
The equipment used to perform the test will conform to the description in paragraph (B.1).
For projects with multiple foundations at the same site, the first two (2) installed foundations need to be tested in accordance with the above procedures to verify the actual foundation capacity prior to installing the subsequent foundations. If either test is considered failure, use anchor method (B1) to install the remaining foundations. For single foundation project, the compression load test is always required to verify the actual foundation capacity. If the test is considered failure, Item 2) of Section B.4 shall apply.
<u>Single anchor system procedure:</u>
A hole of a depth minimum two feet deeper than the installed foundation will be drilled inside the foundation core pipe.
The anchor/rod/centering collar is lowered into the augered/drilled opening with a crane, the hydraulic cylinders are then placed over the foundation top plate and locked into place with the high strength nut. The hydraulic cylinders are then expanded to engage the anchor and apply the compressive force at the top of the foundation. Previously installed dial gauge system will monitor the compressive force applied to the foundation and the vertical movement recorded at the various stages of the test. all the equipment will be removed at test completion and any soil augered during the drilling operations will be placed inside the hole.
Depending on the soil type and axial design loads, a <u>double anchor satellite system</u> could be used to perform the required test; in this case two satellite holes will be auger/drilled at a safe distance (approximately 3 times the foundation diameter) from the installed foundation, the anchor/rod/centering collar is lowered into the augered/drilled opening with a crane, the hydraulic cylinders are then placed over the anchor rod and locked into place with the high strength nut. The hydraulic cylinders are then expanded to the maximum required rod extension or hydraulic pressure for the anchor being used for the testing.The hydraulic cylinders are then removed from the satellite anchors and placed over the foundation top plate. A cross beam will then be placed over them and secured to the anchor rods with high strength nuts. The hydraulic cylinders are then expanded to obtain the required test compressive force and settlements recorded at each stage.
General (B.4):
1) Immediately after the metal foundation is installed and approved by the project inspector, the structures to be supported may be attached to the metal foundation. Use the anchor stud assemblies as specified and/or shown on the approved metal foundation project drawings.
2) If rock is found to be present after the metal foundation is fabricated and delivered to the project site, it shall be determined from field verification the depth that the rock layer is encountered below finished grade and the depth at which the rock layer ends below finished grade. The metal foundation for those locations will be:
a) The location of the metal foundation, with approval from the Engineer, will be relocated as directed by the Department to avoid the rock layer.
b) Replace the proposed metal foundation with a conventional concrete foundation at the original location, as directed by the Engineer at no additional cost to the department.
c) Modification of the metal foundation or supported structure to accommodate obstructions or mis-installation will not be permitted.

C. Reports - An installation report supplied by the manufacturer must be completed and submitted to the Department for each installation. The report must be completed and signed by the installer and signed by a Department Inspector and shall include the visual classifications of the soils encountered, identification number of the foundation, the installer's name and company, the location of the installation, the date of the installation, the foundation size, the calibration dates of the equipment, the installation forces required at measured depths, and any problem encountered and their resolution.

D. Rejection of Units - Units that are damaged or do not conform to the above specifications may be rejected. Replace or repair rejected units at no additional costs in a manner acceptable to the Engineer. Attempting to pull up the over-pushed or over-vibrated metal foundation to match the proposed foundation elevation will not be permitted and the unit may be rejected.

E. Technical Assistance - In the event of unusual problems or special circumstances, provide a qualified designer/installer of metal foundations at the project site to assist the Contractor and Engineer.

SHEET 1 OF 2

10/6/2016

PENNSYLVANIA
DEPARTMENT OF TRANSPORTATION
RECOMMENDED
Thomas P Macioce
CHIEF BRIDGE ENGINEER

Rev. 1 Approval on 6/22/2009
Initial Approval on 6/10/1999

COMMONWEALTH OF PENNSYLVANIA
REGISTERED PROFESSIONAL
JASON R. TRUCKENBROD
ENGINEER
No. 51789-E
4-26-16

THIS DRAWING IS THE PROPERTY OF "SHANER INDUSTRIES". IT IS MADE FOR EXCLUSIVE USE OF "SHANER INDUSTRIES". NEITHER THE DRAWING OR REPRODUCTION OF IT NOR INFORMATION DERIVED FROM IT IS TO BE GIVEN TO OTHERS WITHOUT THE EXPRESSED CONSENT OF "SHANER INDUSTRIES". NO USE IS TO BE MADE OF IT WHICH IS OR MAY BE IN ANY WAY INJURIOUS TO AND/OR CONTRARY TO THE INTERESTS OF "SHANER INDUSTRIES". "SHANER INDUSTRIES" MAKES NO REPRESENTATIONS OR WARRANTIES AS TO ANY USE OF THIS DRAWING OTHER THAN THAT OF WHICH "SHANER INDUSTRIES" ORIGINALLY INTENDED. THIS FOUNDATION TYPE IS COVERED UNDER U.S. PATENT No 5,570,975.

Rev. 0	12-07-2015	FINAL ISSUE.

STATE: PA
JOB NUMBER:
PROJECT: COMMONWEALTH OF PENNSYLVANIA, DEPARTMENT OF TRANSPORTATION, BUREAU OF PROJECT DELIVERY.
DESCRIPTION: METAL FOUNDATIONS FOR CONVENTIONAL LIGHTING POLE.

SHANER INDUSTRIES
260 PULLMAN SQUARE #169.
BUTLER, PA 16001
T 724-266-1066

CLIENT:	
DRAWN BY: DL	SCALE: N.T.S.
CHECKED BY: JS	
DATE: 5-26-2015	
DRAWING NUMBER: 99-034 PE,Rev. 2	

REV. 2 CHANGED Metal Foundations, LLC to Shaner Industries, LLC.

METAL FOUNDATIONS - ALL RIGHTS OF THIS TECHNOLOGY AND DESIGN ARE PROPERTY OF SHANER INDUSTRIES. UNAUTHORIZED USE OF THIS CONTENT WITHOUT EXPRESS WRITTEN PERMISSION IS SUBJECT TO LEGAL ACTION AND WILL BE PURSUED TO THE FULLEST EXTENT.

METAL FOUNDATION DATA FOR CONVENTIONAL LIGHTING POLES - HIGHWAY LIGHTING FOUNDATIONS - SELECTION TABLE																		
CONVENTIONAL LIGHTING POLE	TOP PLATE			STUDS/BOLTS			PIPE DIMENSION				FIN DIMENSION							GROUND LOAD REACTIONS	
POLE HEIGHTS	T	DIMENSION "E x E"	YIELD KSI	QTY.	STUDS DIAMETER	BOLT CIRCLE DIAMETER	DIAMETER & WALL	LENGTH "H"	WELD PIPE-TOP PLATE +	YIELD KSI	WIDTH & THICKNESS	LENGTH	WELD FIN-PIPE + REINFORCING		WELD FIN-TOP PLATE + REINFORCING		YIELD KSI	OVERTURNING MOMENT	SHEAR FORCE
(FT)														R		R		KIP-FT	KIPS
UP TO 30'	1.00"	18" x 18"	36	4	TBD	11" - 15.5"	8.625"Ø -0.5" WALL	11'-6"	5/16"	42	6" -0.375"	6'-8"	CJP		CJP		36	25	0.89
35'	1.00"	21" x 21"	36	4	TBD	13" - 17.5"	10.75"Ø -0.50" WALL	12'-3"	5/16"	42	5" -0.375"	6'-0"	CJP		CJP		36	30	0.95
40'	1.00"	21" x 21"	36	4	TBD	13" - 17.5"	10.75"Ø -0.50" WALL	13'-0"	5/16"	42	8" -0.375"	5'-6"	CJP		CJP		36	35.26	1.02
45'	1.25"	21" x 21"	36	4	TBD	13" - 17.5"	10.75"Ø -0.50" WALL	13'-6"	5/16"	42	9" -0.375"	9'-0"	CJP		CJP		36	44	1.12
50'	1.25"	21" x 21"	36	4	TBD	13" - 17.5"	10.75"Ø -0.50" WALL	14'-6"	5/16"	42	10" -0.375"	8'-0"	CJP		CJP		36	50.18	1.18

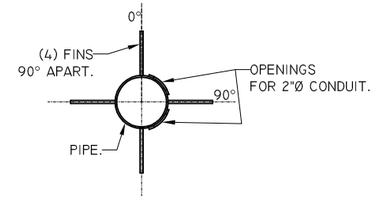

5 SECTION "A"
(TYP)

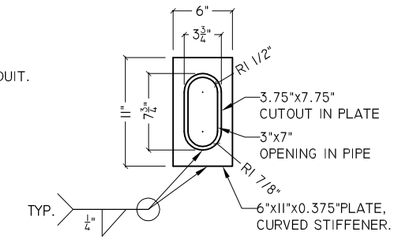

6 OPENING DETAIL
(Ø2" CONDUIT)
QTY. 2, 90° APART
NTS

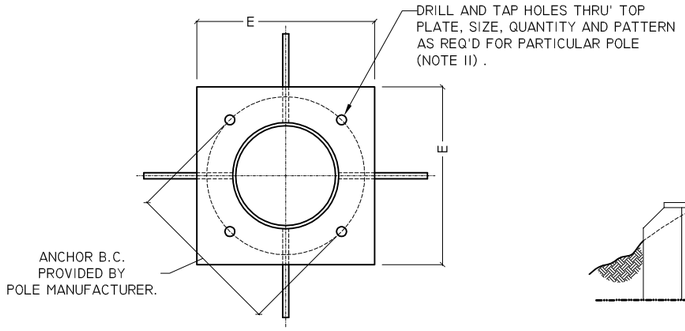

2 TOP PLATE
NTS.

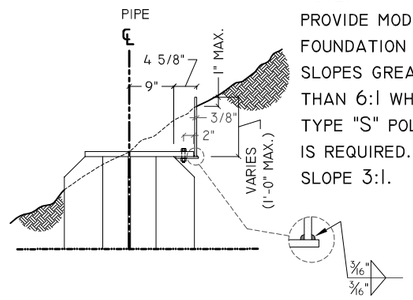

NOTE:
PROVIDE MODIFIED FOUNDATION ON SLOPES GREATER THAN 6:1 WHERE TYPE "S" POLE BASE IS REQUIRED. MAX. SLOPE 3:1.

3 LATERAL DETAIL
(TYPE FC MODIFIED FOUNDATION)

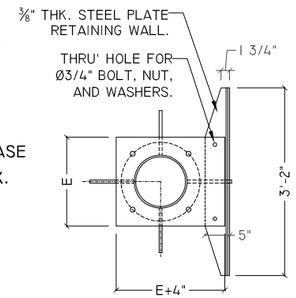

4 PLAN VIEW
(TYPE FC MODIFIED FOUNDATION)

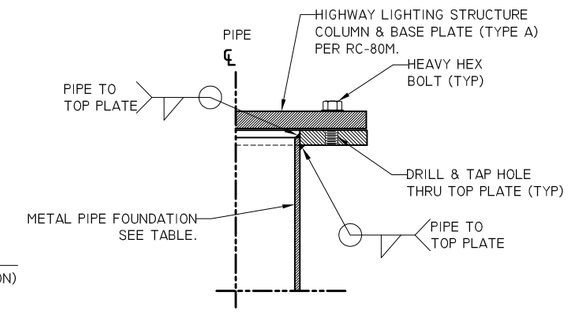

7 DETAIL 3
(TOP PLATE WELDS)

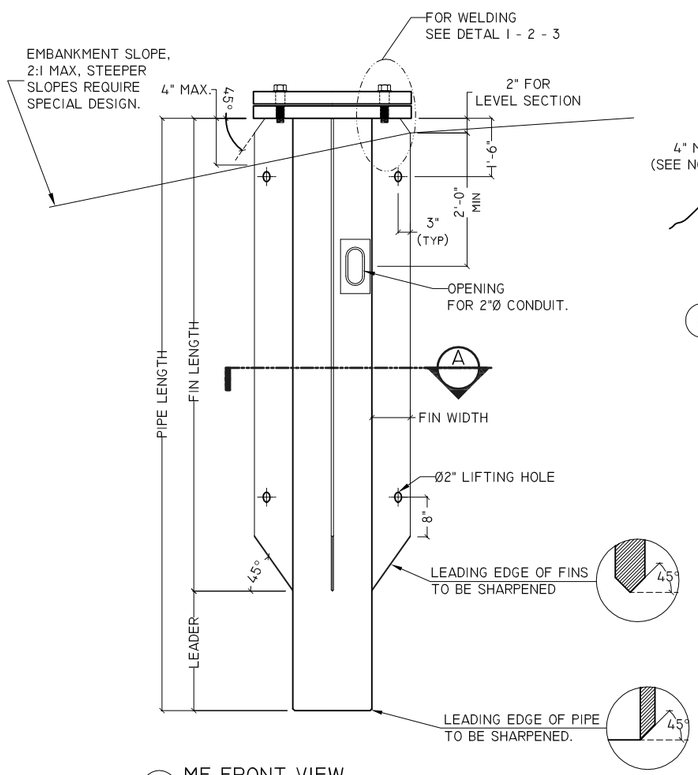

1 MF FRONT VIEW
(DETAIL FOR TYPE A POLE BASE)

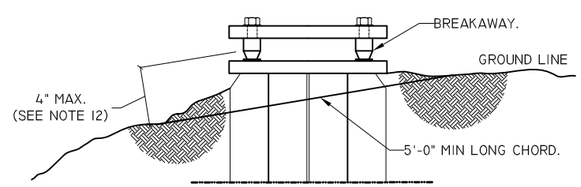

8 DETAIL FOR TYPE S POLE BASE FOUNDATION
(THE MAXIMUM NEGATIVE SLOPE FOR FOUNDATION LOCATION IS 6:1)

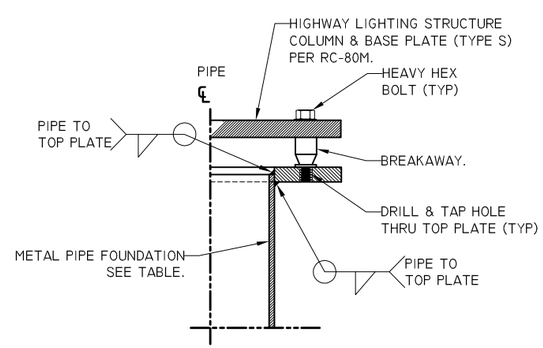

9 DETAIL 1
(TOP PLATE WELDS)

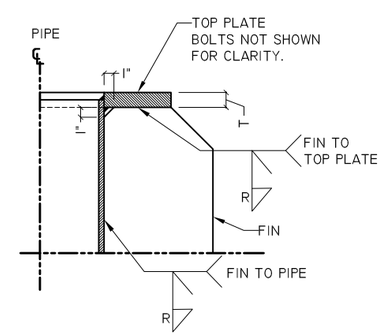

10 DETAIL 2
(FIN WELDS)

NOTES:

GENERAL:

1. THESE MF FOUNDATIOS ARE ALTERNATES FOR THOSE SPECIFIED ON DRAWING RC-80M, SHEET 1. SEE DRAWING RC-80M FOR FOUNDATION NOTES, GENERAL NOTES, AND DESIGN CRITERIA FOR PADOT CONVENTIONAL LIGHTING POLE FOUNDATIONS. DELETE GROUNDING CONNECTIONS WHEN TESTING VERIFIES THAT THE RESISTENCE BETWEEN THE FOUNDATION AND EARTH IS 25 OHMS OR LESS.
2. PROVIDE MATERIALS AND WORKMANSHIP IN ACCORDANCE WITH SPECIFICATIONS PUB. 408 WITH INTERIM REVISIONS ANSI/AASHTO/AWS D1.5-2002 AND D1.1 BRIDGE WELDING CODE AND CONTRACT SPECIAL PROVISIONS.
3. ALL STRUCTURAL STEEL MATERIAL AND FABRICATION SHALL COMPLY WITH PUB. 408, SECTION 1105, "FABRICATED STRUCTURAL STEEL", AND WITH SECTION 1101, "HIGHWAY LIGHTING".
4. ENTER FOUNDATION SELECTION TABLE WITH MOUNTING HEIGHT AND FIND APPROPRIATE FOUNDATION DIMENSIONS.
5. PIPE, ASTM A500, GRADE B.
6. FINS, GUSSETS AND TOP PLATE ASTM A-36 AND ASTM A572 STEEL .
7. CERTIFICATION AS SPECIFIED IN 106.03 (B) 3. OF PUBLICATION 408. FURNISH A COPY OF THE RESULTS OF ALL TESTS PERFORMED WHICH ARE NECESSARY TO ASSURE COMPLIANCE WITH THE SPECIFICATIONS.
8. FOUNDATIONS TO BE GALVANIZED PER ASTM A-123 AFTER COMPLETE WELDED ASSEMBLY.
9. WELDING IN ACCORDANCE WITH ANSI/AASHTO/AWS D 1.5-2002 AND D 1.1 AND SECTION 1105-03(M) OF PUBLICATION 408 USING E-60XX WELDING ELECTRODES OR BETTER.
10. INSTALL IN ACCORDANCE WITH THE SPECIFICATIONS ON PADOT DRAWING #99-034 PE SHEET 1 OF 2, NO FIELD MODIFICATIONS OF FOUNDATIONS ARE PERMITTED.
11. DRILL AND TAP HOLES THRU TOP PLATE, SIZE, QUANTITY AND PATTERN AS REQUIRED FOR PARTICULAR POLE AND ANCHOR BOLTS. PROVIDE HOT DIPPED GALVANIZED BOLTS, BREAKAWAY CONNECTORS, SHIMS LOCK WASHERS AND WASHERS AS SPECIFIED BY THE POLE MANUFACTURER.
12. FOR TYPE S POLES - PROVIDE A MAXIMUM OF 4" TO THE TOP OF THE FOUNDATION, OR STUB OF BREAKAWAY DEVICE, WHICHEVER IS HIGHER, MEASURED FROM AN IMAGINARY 5' LONG CHORD, ALIGNED RADIALLY (PERPENDICULAR) TO THE CENTERLINE OF THE ROADWAY, AND CONNECTING ANY POINT WITHIN THE LENGTH OF THE CHORD EXTENDING TO THE GROUND SURFACE ON BOTH SIDES OF THE SUPPORT. THE MAXIMUM NEGATIVE SLOPE FOR A TYPE S POLE BASE FOUNDATION LOCATION IS 6:1. SEE DETAIL.
13. LOCATE ELECTRICAL CONDUIT SLOTS 18 INCHES BELOW LOW POINT IN FINISHED GRADE SO THAT CONDUITS CAN BE INSTALLED AS DEFINED ON DRAWING RC-80M, SHEET 1 OF 2.
14. GROUND LOAD REACTIONS AS SHOWN IN THE TABLE WERE COMPUTED ACCORDING TO THE PADOT DESIGN MANUAL USING A SOIL ANGLE OF SHEARING RESISTANCE OF 30 DEGREES AND A COHESION OF ZERO, AND ASSUMPTION OF LEVEL GROUND SURFACE. THE MINIMUM COMPUTED SAFETY FACTOR FOR GEOTECHNICAL FAILURE WAS 2.5. THESE MOMENTS RESULT FROM AN 80 MPH WIND ON CYLINDRICAL POLES WITH A 30-FOOT LUMINAIRE ARM.
15. INSTALLATION TOLERANCES:
    - PLUMBNESS WITHIN 2% OF FOUNDATION LENGTH.
    - CENTER OF ANCHOR BOLT PATTERN WITHIN 0.25 INCH OF CENTER OF FOUNDATION.
    - CENTER OF FOUNDATION WITHIN 3 INCHES OF PLANNED LOCATION UNLESS OTHERWISE PERMITTED BY THE ENGINEER.
    - FIN ALIGNMENT WITHIN 2 DEGREES OF DESIGN ORIENTATION UNLESS OTHERWISE PERMITTED BY THE ENGINEER.
    - FOUNDATION INSTALLED IN CONFORMITY WITH LINES, GRADES, FIN ORIENTATIONS, DIMENSIONS, AND LOCATIONS SHOWN ON CONTRACT DRAWINGS.

METAL FOUNDATIONS - ALL RIGHTS OF THIS TECHNOLOGY AND DESIGN ARE PROPERTY OF SHANER INDUSTRIES. UNAUTHORIZED USE OF THIS CONTENT WITHOUT EXPRESS WRITTEN PERMISSION IS SUBJECT TO LEGAL ACTION AND WILL BE PURSUED TO THE FULLEST EXTENT.

THIS DRAWING IS THE PROPERTY OF "SHANER INDUSTRIES", IT IS MADE FOR EXCLUSIVE USE OF "SHANER INDUSTRIES". NEITHER THE DRAWING OR REPRODUCTION OF IT NOR INFORMATION DERIVED FROM IT IS TO BE GIVEN TO OTHERS WITHOUT THE EXPRESSED CONSENT OF "SHANER INDUSTRIES". NO USE IS TO BE MADE OF IT WHICH IS OR MAY BE IN ANY WAY INJURIOUS TO AND/OR CONTRARY TO THE INTERESTS OF "SHANER INDUSTRIES". "SHANER INDUSTRIES" MAKES NO REPRESENTATIONS OR WARRANTIES AS TO ANY USE OF THIS DRAWING OTHER THAN THAT OF WHICH "SHANER INDUSTRIES" ORIGINALLY INTENDED. THIS FOUNDATION TYPE IS COVERED UNDER U.S. PATENT No 5,570,975.

Rev. 0	04-07-2016	FINAL ISSUE.

STATE: PA
JOB NUMBER:
PROJECT: COMMONWEALTH OF PENNSYLVANIA, DEPARTMENT OF TRANSPORTATION, BUREAU OF PROJECT DELIVERY.
DESCRIPTION: METAL FOUNDATIONS FOR CONVENTIONAL LIGHTING POLE.

SHANER INDUSTRIES
260 PULLMAN SQUARE #169.
BUTLER, PA 16001
T 724-266-1066

CLIENT: PENNDOT	
DRAWN BY: DL	SCALE: N.T.S.
CHECKED BY: JS	
DATE: 5-26-2015	
DRAWING NUMBER: 99-034 PE,Rev. 2	

COMMONWEALTH OF PENNSYLVANIA
REGISTERED PROFESSIONAL
JASON R. TRUCKENBROD
ENGINEER
No. 51720-E
4-26-16

10/6/2016

Product:

Item 8642-7000 – Prefabricated T-Wall Retaining Wall System
The Neel Company
PennDOT Drawing # 87-402 PE (Revision IV)

Approval Date:	**Initiated By SOL:**
April 13, 2017	483-17-01

Application/Use:

Prefabricated T-Wall Retaining Wall System manufactured by The Neel Company of Springfield, VA has been approved for use as an "As-designed" or "Alternate" retaining wall. The use as an "As-designed" or "Alternate" or retaining wall is at the discretion of the District Executive.

Prefabricated T-Wall Retaining Wall System's usage has the following restrictions:

- The minimum internal friction angle of the foundation soil is 32 degrees.

- Maximum Wall Height:
  50 feet for level backfill with traffic founded on either rock or soil.
  40' for 3H:1V infinite sloping backfill or broken sloping backfill with traffic founded on rock.

- Walls to be installed at streams must be validated based on saturated backfill conditions.

This wall system meets both AASHTO LRFD and Design Manual, Part 4 design criteria.

Specifications:

Design/Material/Construction Specifications for this retaining wall system are specified on PennDOT Drawing #87-402 PE (Revision IV) dated April 13, 2017 of Prefabricated T-Wall Retaining Wall System details for your use.

Comments:

On those projects permitting the use of this system as an alternate, a special provision should be included in the proposal to indicate that the "Prefabricated T-Wall Retaining Wall System" as an alternate is allowed.
The contractor will be required to revise the pertinent contract drawings as per DM-4, PP 1.10 to show the usage of "Prefabricated T-Wall Retaining Wall System" and will also be required to reimburse the Department a fee of $1,000 per design for the review and approval of the revision. This should be specified in the contract's Special Provisions.

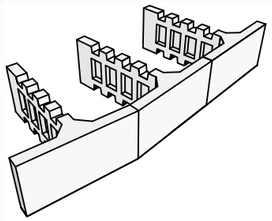

STANDARD DETAILS

T-WALL® RETAINING WALL SYSTEM

INDEX OF DRAWINGS

SHEET	TITLE	REV #	DATE
1 OF 67	COVER SHEET AND SPECIFICATIONS I		
2 OF 67	SPECIFICATIONS II		
3 OF 67	SPECIFICATIONS III		
4 OF 67	TYPICAL DETAILS		
5 OF 67	TYPICAL DETAILS SECTIONS AND TOP OF WALL OPTIONS		
6 OF 67	TYPICAL DETAILS SHEAR KEY, JOINT & STRUCTURE INTERFACE DETAILS		
7 OF 67	TYPICAL DETAILS CORNER DETAIL (I)		
8 OF 67	TYPICAL DETAILS CORNER DETAIL (II)		
9 OF 67	TYPICAL DETAILS STONE MASONRY VENEER FACING		
10 OF 67	TYPICAL DETAILS DRAINAGE STRUCTURES (I)		
11 OF 67	TYPICAL DETAILS DRAINAGE STRUCTURES (II)		
12 OF 67	TYPICAL DETAILS TRAFFIC BARRIER WITH BITUMINOUS CONCRETE SHOULDER		
13 OF 67	TYPICAL DETAILS TRAFFIC BARRIER WITH CEMENT CONCRETE SHOULDER		
14 OF 67	REBAR STANDARD UNITS		
15 OF 67	REBAR STANDARD TOP UNITS (I)		
16 OF 67	REBAR STANDARD TOP UNITS (II)		
17 OF 67	REBAR STANDARD DOUBLE UNITS (I)		
18 OF 67	REBAR STANDARD DOUBLE UNITS (II)		
19 OF 67	REBAR 2.25' STEM STANDARD CORNER UNITS		
20 OF 67	REBAR 2.75' STEM STANDARD CORNER UNITS		
21 OF 67	REBAR 7.5' STEM STANDARD CORNER UNITS		
22 OF 67	REBAR 2.25' STEM STANDARD TOP CORNER UNITS		
23 OF 67	REBAR 2.75' STEM STANDARD TOP CORNER UNITS		
24 OF 67	MISCELLANEOUS DETAILS (I) 5.0 x 7.5 STANDARD UNITS		
25 OF 67	MISCELLANEOUS DETAILS (II) 5.0 x 7.5 STANDARD UNITS		
26 OF 67	TYPICAL DETAILS - 7.50 WIDE UNITS TRAFFIC BARRIER WITH BITUMINOUS CONCRETE SHOULDER		
27 OF 67	TYPICAL DETAILS - 7.50 WIDE UNITS TRAFFIC BARRIER WITH CEMENT CONCRETE SHOULDER		
28 OF 67	REBAR 5.0x7.5 STANDARD UNIT (I)		
29 OF 67	REBAR 5.0x7.5 STANDARD UNIT (II)		
30 OF 67	REBAR 7.50' WIDE STANDARD TOP UNIT (I)		
31 OF 67	REBAR 7.50' WIDE STANDARD TOP UNIT (II)		
32 OF 67	REBAR 7.50' WIDE STANDARD TOP UNIT (III)		
33 OF 67	REBAR 7.50' WIDE STANDARD TOP UNIT (IV)		
34 OF 67	REBAR 7.50' WIDE STANDARD TOP UNIT (V)		
35 OF 67	REBAR THREE QUARTER UNIT (I)		
36 OF 67	REBAR THREE QUARTER UNIT (II)		
37 OF 67	REBAR THREE QUARTER TOP UNIT (I)		
38 OF 67	REBAR THREE QUARTER TOP UNIT (II)		
39 OF 67	REBAR THREE QUARTER TOP UNIT (III)		
40 OF 67	REBAR THREE QUARTER TOP UNIT (IV)		
41 OF 67	REBAR THREE QUARTER TOP UNIT (V)		
42 OF 67	REBAR HALF UNIT (I)		
43 OF 67	REBAR HALF UNIT (II)		
44 OF 67	REBAR HALF TOP UNIT (I)		
45 OF 67	REBAR HALF TOP UNIT (II)		
46 OF 67	REBAR HALF TOP UNIT (III)		
47 OF 67	REBAR HALF TOP UNIT (IV)		
48 OF 67	REBAR STANDARD CORNER UNITS - 3'-9" STEM		
49 OF 67	REBAR STANDARD CORNER UNITS - 4'-1" STEM		
50 OF 67	REBAR THREE QUARTER CORNER UNITS - 3'-9" STEM		
51 OF 67	REBAR THREE QUARTER CORNER UNITS - 4'-1" STEM		
52 OF 67	REBAR HALF CORNER UNITS - 3'-9" STEM		
53 OF 67	REBAR HALF CORNER UNITS - 4'-1" STEM		
54 OF 67	REBAR 7.50' WIDE STANDARD TOP CORNER UNITS - 3'-9" STEM (I)		
55 OF 67	REBAR 7.50' WIDE STANDARD TOP CORNER UNITS - 3'-9" STEM (II)		
56 OF 67	REBAR 7.50' WIDE STANDARD TOP CORNER UNITS - 3'-9" STEM (III)		
57 OF 67	REBAR 7.50' WIDE STANDARD TOP CORNER UNITS - 4'-1" STEM (I)		
58 OF 67	REBAR 7.50' WIDE STANDARD TOP CORNER UNITS - 4'-1" STEM (II)		
59 OF 67	REBAR 7.50' WIDE STANDARD TOP CORNER UNITS - 4'-1" STEM (III)		
60 OF 67	REBAR THREE QUARTER TOP CORNER UNITS - 3'-9" STEM (I)		
61 OF 67	REBAR THREE QUARTER TOP CORNER UNITS - 3'-9" STEM (II)		
62 OF 67	REBAR THREE QUARTER TOP CORNER UNITS - 4'-1" STEM (I)		
63 OF 67	REBAR THREE QUARTER TOP CORNER UNITS - 4'-1" STEM (II)		
64 OF 67	REBAR HALF TOP CORNER UNITS - 3'-9" STEM (I)		
65 OF 67	REBAR HALF TOP CORNER UNITS - 3'-9" STEM (II)		
66 OF 67	REBAR HALF TOP CORNER UNITS - 4'-1" STEM (I)		
67 OF 67	REBAR HALF TOP CORNER UNITS - 4'-1" STEM (II)		

DESIGN SPECIFICATIONS

T-WALL® DESIGN SPECIFICATIONS

1.0 General

The Neel Company takes full responsibility for engineering theory and calculation correctness and ensuring that all design assumptions are validated in the contract documents either by needed details or construction specifications.

The Neel Company is to prepare design calculations and contract drawings for the T-WALL® Retaining Wall System in accordance with the guidelines specified herein. The T-WALL® design parameters and other limitations are as per manufacturer's design specifications prepared by The Neel Company for the T-WALL® Retaining Wall System (8328-D Traford Lane, Springfield, VA), and Pennsylvania Department of Transportation Design Manual Part 4.

Secure District Bridge Engineer and Geotechnical Engineer's approval before incorporating the T-WALL® Retaining Walls System in any project.

2.0 Technical Considerations

T-WALL® is a precast modular wall system whose dimensions are bounded by the front face panels and a back plane formed by the end of the concrete stems. Soil/structure interaction is mobilized at every level by friction between the stems and the granular material compacted between them to ensure local stability.

T-WALL® may be used where conventional retaining walls, nongravity cantilevered walls, anchored walls, mechanically stabilized earth (MSE) walls, and prefabricated modular walls are considered. T-WALL® is particularly well suited in side-hill cut applications, along stream channels and where limited space is available between the wall line and the right-of-way limits. Typically, the length of the bottom stem is approximately 60 percent of vertical wall height and 50 percent of battered wall height.

When constructed on fills, the embankment between the original ground and the footings shall be composed of a granular material in conformance with Publication 408, Section 206.2.1(b) or rock.

3.0 Design

a. Submit hard copies or an electronic copy of construction drawings and design calculations for the T-WALL® Retaining Wall to Engineer for review and approval.

b. On the first sheet of the construction drawings and calculations, show a Professional Engineer's Seal (licensed in Pennsylvania), a valid Signature in ink, a business name and address and the date.

The construction drawings or manual also must include erection methods and detailed erection plans.

c. On the first sheet of the drawings, placed above the P.E. seal, include the following statement:

"All design assumptions are validated through either notes to the Contractor or details on these drawings."

d. In the event that certain design Parameters, Stresses or Specifications are in conflict, the following order of precedence governs:

(1) Design requirements listed in "Special Drawings and Special Design Requirements" of the special provisions.

(2) Pennsylvania Department of Transportation current Design Manual Part 4

(3) Pennsylvania Department of Transportation standard drawings.

(4) AASHTO LRFD Bridge Design Specifications

DESIGN SPECIFICATIONS (CONTINUED)

e. In the event that a clear order of precedence cannot be established, or a difference in interpretation of the design cannot be resolved, the Chief Bridge Engineer will be the arbiter and his decision is final.

4.0 Structure Dimensions

T-WALL® is dimensioned to ensure AASHTO Section 11.10 is satisfied. In addition, a saturated soil condition must be considered in determining the internal and external stability of the walls.

The minimum embedment depth at the wall face shall be based on bearing resistance, settlement and stability requirements. Unless constructed on rock foundations, the embedment shall not be less than:

- 3-ft from adjoining finished ground to top of leveling pad.
- A depth based on the prevailing depth of frost penetration (if the soil below the wall is frost susceptible) and the external stability requirement. As an alternative to locating the wall base below the depth of frost penetration where frost susceptible soils are present, the soil within the depth and lateral extent of frost penetration below the wall can be removed and replaced with non-frost susceptible granular material.
- For walls constructed along rivers or streams, embedment depths shall be established at a minimum of 2-ft below potential scour depth or 6-ft below adjacent streambed (ground) elevation, whichever is greater.
- A minimum horizontal bench width of 4-ft shall be provided in front of the walls founded on slopes. The bench may be formed or the slope can be continued above that level to the wall face.

5.0 External Stability Computations

Stability computations shall be made at every module level by assuming that the T-WALL® system acts as a rigid body. At these levels the required overturning resistance shall be provided. The coefficient of active earth pressure, Ka, used to compute the horizontal force resulting from the random backfill and other loads shall be computed on the basis of the friction angle of the random backfill using a Rankine state of stress. In the absence of specific data, a maximum friction angle of 30 degrees shall be used. This limitation also applies when determining the coefficient of sliding friction at the wall base. Passive pressures shall be neglected in stability computations.

The active earth pressure coefficients for random backfill and external stability equations for walls with horizontal backslope and inclined backslope shall be calculated in accordance with AASHTO Section 11. For calculations of mass stability, the continuous traffic surcharge loads shall be deemed to act at the end of the T-WALL® stems. Walls must be proportioned to meet the criteria outlined in Section 4.0 on this page.

Note to Designer

For T-WALL® structures, global stability analyses shall be performed using PennDOT accepted methods (GSTABL Per DM4) and yielding a minimum safety factor of 1.5. The global stability analyses for the "as-designed" T-WALL® design shall be included in the PennDOT approved TS&L foundation report.

PENNSYLVANIA
DEPARTMENT OF TRANSPORTATION
RECOMMENDED

Thomas P Macioce

CHIEF BRIDGE ENGINEER

4/13/2017

I CERTIFY THAT ALL ASSUMPTIONS MADE IN DESIGNING THIS WALL HAVE BEEN VALIDATED THROUGH CONSTRUCTION DETAILS, SPECIAL NOTES AND/OR INSTRUCTIONS TO THE FABRICATOR, ERECTOR AND CONTRACTOR

COMMONWEALTH OF PENNSYLVANIA
REGISTERED PROFESSIONAL
KAMAL DEV DIXIT
No. PE082486

KAMAL DEV DIXIT

LRFD SPECIFICATIONS NOTE MODIFIED TO PERMIT CONSISTENCY WITH OTHER DOCUMENTS BY BRIDGE DESIGN & TECHNOLOGY DIVISION ON 8-23-17.

DESIGNER

THE NEEL COMPANY
8328-D TRAFORD LANE
SPRINGFIELD, VA 22152
PH: (703) 913-7858
FX: (703) 913-7859
Web: www.neelco.com

This drawing contains information proprietary to The Neel Company. The Neel Company is the exclusive licensee of the T-WALL® patent. © 2017, The Neel Company

DATE:	03-23-17
SCALE:	NO SCALE
DESIGNED:	CAA
DRAWN:	CAA/CJW
CHECKED:	CCG/KD
TNC JOB #:	TW3634
TNC SHT #:	1 OF 67

PA DOT DWG # 87-402 PE (REVISION IV)

COMMONWEALTH OF PENNSYLVANIA
DEPARTMENT OF TRANSPORTATION
BUREAU OF PROJECT DELIVERY

T-WALL® STANDARDS

PREFABRICATED T-WALL® RETAINING WALL SYSTEM

SHOP DRAWINGS

COVER SHEET AND SPECIFICATIONS I

SHEET 1 OF 67

87-402 PE

DATE: 03-23-17 TNC JOB #: TW3634 PLOT DATE AND TIME: Thursday, March 23, 2017 10:55:21 CAD FILE NAME: 001 Cover & Specs r4-0.wx

DESIGN SPECIFICATIONS (CONTINUED)

6.0 Bearing Resistance and Foundation Stability

Allowable bearing resistance for T-WALL® shall be computed using resistance factors per AASHTO Section 10.5 applied to the calculated nominal bearing resistance. The equivalent width of the footing for nominal bearing resistance calculations shall be the length of the lowest stem (L). The location of the resultant center of pressure shall be within the middle half of the base (L/2) for walls founded on soils and middle 3L/4 for walls founded on rock. Bearing pressure shall be computed using the Meyerhof distribution, which considers a uniform base distribution over an effective width of footing B' = L - 2e.

7.0 Internal Stability

The stem length at each level shall be sized to resist the horizontal pressure at that level by the weight of the concrete units and by the frictional resistance on the stem. The horizontal pressure shall be computed by multiplying the vertical pressure (gamma* H) by an active coefficient of earth pressure, Ka.

Computation of the horizontal force within the T-WALL® mass shall be based on a friction angle of 34 degrees or as specified in the contract plans. A higher friction angle can be used if specific information for the backfill being used is provided and approved. At each level the pullout resistance is computed in accordance with Section 8.0, the factored pullout resistance, neglecting liveload surcharge, shall be greater than the factored horizontal pullout forces.

8.0 Pullout Design

The following forces resist the horizontal pressure calculated in section 7.0:

$$R = [Wc(fc) + \gamma\ Ko\ H_{ave}\ fs\ A_{eff}\ (\%contact) + \gamma\ Ko\ H_{ave}\ \tan ø\ \ A_{eff}\ (\%contact)]*RF$$

where:

R = pullout resistance per unit
Wc = weight of the concrete units
fc = coefficient of friction on the concrete
g = unit weight of soil
Ko = earth pressure at rest
Have = height to midpoint of level under consideration
fs = friction soil to concrete
tan ø = friction soil to soil
Aeff = stem area behind Rankine active zone
%contact = % area with soil to soil contact, or soil to concrete contact
RF = resistance factor

Plus resistance from shear keys

RESISTANCE FACTORS

	STRENGTH LIMIT STATES	SERVICE & EXTREME LIMIT STATES
FRICTION BETWEEN SOIL & SOIL	1	1
FRICTION BETWEEN SOIL & CONCRETE	0.9	1
FRICTION BETWEEN JOINT MATERIAL & CONCRETE	0.9	1
SHEAR THROUGH SHEAR KEY	0.9	1

9.0 Structural Design

The units shall be designed to resist the horizontal forces calculated according to Section 7.0 on drawing sheet no. 1 of 15.

The minimum design thickness shall be 6", and the minimum design concrete cover shall be 2".

Reinforcement in T-WALL® units shall be in accordance with Design Manual Part 4 and AASHTO Section 5 (CONCRETE STRUCTURES).

Resistance Factors: Flexure 0.9, Tension 0.9, Shear 0.9

9.1 Drainage Requirements

T-WALL® system shall be designed with a 6-inch perforated pipe under drain and/or #57 drainage blankets based upon field conditions.

T-WALL® has a full height 3/8-inch space with filter cloth backing at every vertical joint along the face of the wall. This space acts as a weep hole and provides sufficient drainage area for water to get out of the wall mass. Therefore no additional weep holes at wall face are necessary for the T-WALL® Retaining Wall System.

If a crash wall is installed in front of T-WALL®, provide 4-inch diameter weep holes at 10-ft maximum spacing. The weep holes must extend through the C.I.P. crash wall.

10.0 Special Loading Conditions

Concentrated line loads shall be incorporated into the internal design by using a simplified uniform vertical distribution of 2 vertical to 1 horizontal to determine the vertical component of stress with depth within the T-WALL® mass.

Traffic loads shall be considered in accordance with AASHTO criteria.

For structures along rivers and canals, a differential hydrostatic pressure equal to 3' of water shall be considered for design. This load shall be applied at the high-water level. Buoyant unit weights shall be used in the calculations for internal and external stability beginning at levels just below the application of the differential hydrostatic pressure.

DESIGN SPECIFICATIONS (CONTINUED)

11.0 Traffic Barriers:

When constructed over or in line with the front face of the units, barriers shall be designed to meet the ultimate strength of the Department's standard parapet/barrier by their own mass and ability to resist overturning moments. Base slabs shall not have any transverse joints except construction joints. The horizontal load shall be deemed to be transferred by horizontal shear stress to the T-WALL® mass.

Barrier and moment slab details and reinforcement shall be per sheets 12 and 13. These details are copied from BC-799M.

Flexible post and beam systems, when used, shall be placed a minimum distance of 3' from the wall face, driven 5' below grade, and spaced to miss the stems. The upper two units shall be designed for an additional horizontal load of 300 plf of wall.

12.0 Design Methodology:

Use LRFD design methodology.

13.0 Design Build projects:

The Neel Company will either provide the TS&L design drawings, calculations and foundations report directly to the contractor or furnish the necessary design details and calculations to the design build team consultant for inclusion in the TS&L submittal for approval.

14.0 Maximum Wall Height:

- 50-ft for level backfill with traffic founded on either rock or soil.
- 40-ft with 3H : 1V infinite backslope founded on rock only.
- 40-ft with 3H : 1V broken backslope and traffic founded on rock only.

CONSTRUCTION SPECIFICATIONS

T-WALL® CONSTRUCTION AND MANUFACTURING SPECIFICATIONS

1.0 DESCRIPTION:

This specification is for manufacturing and construction of the T-WALL® Retaining Wall System. This system, which is proprietary, consists of precast concrete units erected to form a modular retaining wall.

2.0 MATERIALS:

a. **Precast T-WALL® Units and shear keys:** Fabricate precast concrete units at an approved plant in accordance with Section 714.

- 2.5x5.0 and 5.0x5.0 module units and small shear keys
  - Provide concrete with a 28-day minimum compressive strength of 4000 psi for stems up to 24-ft and 5000 psi for stems greater than 24-ft, as determined in accordance with PTM No. 604.
  - Provide 6" minimum thickness of precast T-WALL® units
- 2.5x7.5, 3.75x7.5 and 5.0x7.5 module units and large shear keys
  - Provide concrete with a 28-day minimum compressive strength of 5000 psi, as determined in accordance with PTM No. 604.
  - Provide 8" minimum face thickness, 7" minimum stem thickness of precast T-WALL® units

A higher strength concrete may be substituted for a lower strength at no additional cost to the department.

Use cast-in-place or pre-approved, precast parapets, barriers, copings.

(1) **Testing and Inspection.** Acceptability of the precast T-WALL® units will be determined on the basis of testing for compressive strength, slump, spread of flow (for SCC mixes) and entrained air in the concrete mixture, in addition to visual inspection. Furnish facilities for the Department to perform all necessary sampling and testing in an expeditious and satisfactory manner. Acceptance will be as herein specified.

Acceptance of the T-WALL® units with respect to compressive strength will be on the basis of production lot results. A production lot is defined as the T-WALL® units cast and represented by a single compression test result from one day's production. A minimum of four cylinders per lot will be molded to verify minimum curing and 28-day strengths. Cylinders will be cured with the product and tested in accordance with PTM No. 604 AASHTO F22). Acceptance will be based on compliance with the requirements of Section 714.4 (b) and 714.7 (a), except compression test results will be based on the average of 2 cylinders and no individual cylinder compressive strength result may be below 3600 psi.

(2) **Forms.** Construct forms of steel in a manner that will assure the production of uniform units within specified manufacturing tolerances.

CONSTRUCTION SPECIFICATIONS (CONTINUED)

(3) **Mixing and Placing Concrete.** Mix and deliver the concrete as specified in Section 704. For transporting, placing and consolidating concrete use methods that will prevent segregation of the concrete materials and the displacement of the steel reinforcement from its proper position in the form. Carefully place and vibrate the concrete in the forms sufficiently to produce a surface free from imperfections such as honeycomb, segregation, or cracking. Use clear form oil from the same manufacturer throughout the casting operation.

Do not place concrete when ambient temperatures are below 40º F or above 100º F. Do not use admixtures containing chlorides.

(4) **Finish.** Provide a conventional steel form finish unless otherwise indicated. When special or decorative surface finishes are required, display for approval, a typical sample of the T-WALL® unit indicating the color, texture, and finish intended to be used.

(5) **Tolerances.** Provide units manufactured to the following tolerances:

Face of T-WALL® unit (2.5x5.0 and 5.0x5.0 Module units) :

- Length or height = plus or minus 3/16".
- Deviation from square measured on the diagonal of the front face = 1/2".
- Thickness = minus 1/4", plus 1/2".
- Planarity and Plumbness = 1/4" deviation from a 5' straight edge.

Face of T-WALL® unit (5.0x7.5, 3.75x7.5, and 2.5x7.5 Module units) :

- Length or height = plus or minus 3/16".
- Deviation from square measured on the diagonal of the front face = 1/2".
- Thickness = minus 1/4", plus 1/2".
- Planarity and Plumbness = 1/4" deviation from a 5' straight edge.

Stem of T-WALL® unit (2.5x5.0 and 5.0x5.0 Module units) :

- Straightness = 3/4" per 10'
- Length = plus 1", minus 1"
- Thickness - plus 1/2", minus 1/4"

Stem of T-WALL® unit (5.0x7.5, 3.75x7.5, and 2.5x7.5 Module units) :

- Straightness = 3/4" per 10'
- Length = plus 1", minus 1"
- Thickness - plus 1/2", minus 1/4"

Finish of T-WALL® unit (All units) :

- Unformed top surface shall be a smooth troweled surface to eliminate open aggregate pockets and distortions in excess of 3/16".

Reinforcing steel -

- Cover = minus 1/2" to plus 1/2".
- All other dimensions plus or minus 1/2".
- Other tolerances in accordance with ACI 117.

(6) **Marking.** Clearly scribe or paint with waterproof paint on the rear stem surface of each T-WALL® unit, the date of manufacture, the lot production number and the piece mark.

(7) **Handling, Storing and Shipping.** Handle, store and ship all units in such a manner as to eliminate the danger of chipping, cracks, fractures and excessive handling stress.

Before shipment, examine all surfaces of precast T-WALL® units; patch all surface voids and other defects in wall surfaces in accordance with the approved quality control plan and as directed by the Engineer.

b. **Reinforcing Steel:** Use ASTM - A 615M grade 60 deformed billet-steel bars, except for #3 stirrups which may be grade 40, in accordance with Section 709.1 (a); or steel welded wire fabric in accordance with Section 709.3. Provide epoxy coated bars for the reinforcing steel of the T-WALL® units (where indicated), parapets, copings, or barriers, in accordance with Section 709.1 (d) or 709.3 (a). Bars to be tied in a jig with wire and not welded. Epoxy coated steel bars will require coated wire ties.

c. **Cast-in-Place Concrete:** Provide Class A concrete for leveling pads and Class AA concrete for curbs, parapets and backwalls above bridge seats conforming to the requirements of Section 704.

PA DOT DWG # 87-402 PE (REVISION IV)

COMMONWEALTH OF PENNSYLVANIA
DEPARTMENT OF TRANSPORTATION
BUREAU OF PROJECT DELIVERY

T-WALL® STANDARDS
PREFABRICATED T-WALL® RETAINING WALL SYSTEM

SHOP DRAWINGS
SPECIFICATIONS II

4/13/2017

DESIGNER

THE NEEL COMPANY
8328-D TRAFORD LANE
SPRINGFIELD, VA 22152
PH: (703) 913-7858
FX: (703) 913-7859
Web: www.neelco.com

This drawing contains information proprietary to The Neel Company. The Neel Company is the exclusive licensee of the T-WALL® patent. © 2017, The Neel Company

DATE: 03-23-17
SCALE: NO SCALE
DESIGNED: CAA
DRAWN: CAA/CJW
CHECKED: CCG/KD
TNC JOB #: TW3634
TNC SHT #: 2 OF 67

DATE: 03-23-17 TNC JOB #: TW3634 PLOT DATE AND TIME: Thursday, March 23, 2017 10:55:21 CAD FILE NAME: 001 Cover & Specs r4-0.wxx

CONSTRUCTION SPECIFICATIONS (CONTINUED)

d. **Joint Materials:**

2.5x5.0 and 5.0x5.0 Module units:

No filler is required in the vertical joints. Provide fiber expansion joint material conforming to AASHTO M213 for the horizontal joints as indicated. Cover all vertical joints on the backside of the front face of the wall with geotextile fabric meeting the requirements of Section 735, Class 2, Type A. Provide asphalt joint material conforming to AASHTO M33 or Neoprene rubber blocks for the horizontal joints at or below high flood level.

2.5x7.5, 3.75x7.5 and 5.0x7.5 Module units:

No filler is required in the vertical joints. Cover all vertical and horizontal joints on the backside of the front face of the wall with geotextile fabric meeting the requirements of Section 735, Class 2, Type A. Provide neoprene rubber blocks for the horizontal joints.

Provide minimum width and lap of the fabric as follows:
Vertical Joint = 12"; Lap = 4".

e. **Non-conformance:**

T-WALL® units shall be deemed non-conforming for failure to meet the requirements previously outlined in these specifications. Units may also be deemed non-conforming for the following reasons:

- Spalls, cracks or other surface defects as described in Penn DOT Pub. 145(5-05)
- Exposed reinforcing steel

Non-conforming units shall be classified as:

- Acceptable with restriction
- Acceptable with repair
- Rejected for Penn DOT use.

Classification shall be determined by a designated Penn DOT representative in consultation with The Neel Company designer.

Units may be accepted with restrictions when the defects are non-structural in nature and do not effect the wall stability.

Acceptance of repairs shall be based on criteria and procedure outlined in Penn DOT Pub, 145 (5-05).

T-WALL® units that cannot be repaired shall be rejected, labeled “Rejected for Dept. Use” on the rear face or stem and stored away from all other units.

f. **Granular Fill Material.** Granular Fill Material between the T-WALL® Units:

Provide one or more of the following materials:

- Crushed or natural sand
- Crushed or uncrushed gravel
- Crushed limestone
- Crushed sandstone
- Coarse aggregate (Type C- Section 703. Table B)
- Recycled concrete
- Slag

Backfill materials gradation and properties:

- Gradation as determined by AASHTO T-27:

Sieve Size	Percent Passing
3 inch	100
3/4 inch	20-100
No. 40	0-60
No. 200	0-10

- Backfill materials up to 25% passing thru No. 200 sieve can be used if positive drainage behind the wall is provided. Both the material and the drainage must be approved by Penn DOT and The Neel Company on a project specific basis.
- The material shall contain no more than 2% deleterious shale, clay lumps, friable particles, coal and coke.
- Internal Friction Angle: Furnish material exhibiting an angle of internal friction consistent with that used in the design but not less than 34 degrees as determined by AASHTO T-236, on the portion finer than the No. 10 sieve when compacted to 95% of AASHTO T-99, methods C or D (with oversize correction as outlined) at optimum moisture content, except for coarse aggregates meeting the requirements of Section 703.2. No testing is required for backfills where 80% of the material sizes are greater than 3/4".
- Density: Compacted Density = 120 pcf or as specified on the contract plans. If the compacted density of the locally available material that meets the above gradation and internal friction angle properties, is different, the wall design must be evaluated based on the actual properties of the available backfill material.
- The contractor shall test and certify the unit weight of the select fill. Testing and certification of embankment backfill materials is required if parameters used in design differ from the contract specified values.

CONSTRUCTION SPECIFICATIONS (CONTINUED)

g. **Certification.** Provide certification as specified in Section 106.03 (b) 3. Furnish a copy of all test results performed which are necessary to assure compliance with the specifications.

h. **Shear Key Wrap.** Shear Key Wrap shall be AVI Astro-Foam AF-250 or equivalent.

3.0 CONSTRUCTION

a. **Submittals:** Fabrication of standard units cannot begin without approved shop drawings. Erection of wall cannot begin without approved plans.

b. **Excavation and Foundations:** The foundation for the T-WALL® structure shall be excavated and graded level in accordance with Section 203, Section 204 and Standard Drawing RC-11M to the limits and construction stages as indicated for a width equal to or exceeding the length of the bottom T-WALL® stem. Use the top of the leveling pad as the grade elevation or the appropriate slope for a battered wall.

The foundation subgrade shall be inspected and approved by PennDOT prior to the construction of the wall.

If the Contractor over excavates, the area must be reconstructed as directed by the Engineer. Foundation material found to be unsuitable shall be removed and replaced with compacted granular material, as directed by the Engineer. At each unit foundation level, provide a cast-in-place concrete leveling pad as indicated. Leveling pads shall be level to within 1/4" per pad or per 10', whichever length is smaller. Repair or replace leveling pads which do not meet this requirement as directed by the Engineer at no additional cost.

Shims may be used as necessary to level the T-WALL® units. Use no more than 3/8" combined thickness of shims. The shims should be non-biodegrabeable. If more leveling is required, replace the leveling pad or the units as directed by the Engineer.

Leveling pads shall be placed to the lines, grades and elevations shown on the approved T-WALL shop drawings or as directed by the Engineer. Finish the top of leveling pad with a steel trowel finish in accordance with Section 1001.3.

Precast leveling pads can be used at locations where cast-in-place leveling pads are not feasible, with prior written approval of The Neel Company and PennDOT.

c. **Drainage:** Install the drainage system behind the wall as shown or otherwise indicated on the approved shop drawings.

d. **Wall Erection:** Install the wall units as shown on the approved shop drawings and as described in the T-WALL® Construction Manual. Erection of the units typically should begin at the lowest elevation and proceed laterally along the wall length. Where a wall meets a fixed structure or a critical location such as a bend point, erection should begin at that point, provided the site configuration is suitable.

In the case of vertical walls, T-WALL® units should be set such that the front face is vertical. In the case of battered walls, T-WALL® units should be set at the batter rate of the structure.

Units should be set such that the front faces are in line with the plan layout of the structure. The vertical joint width should be gauged with a round steel bar whose diameter is equal to the desired joint width. For curved structures the joint opening is measured at the front face of the wall.

Tolerance and alignment shall be as follows:

2.5x5.0 and 5.0x5.0 Module units:

1. Horizontal joint openings between panels shall be 1/2" (± 3/8").
2. Vertical joint openings between panels shall be 3/8" (± 3/8").
3. Horizontal alignment tolerance as the wall is constructed shall not exceed 3/4" when measured with a 10' straight edge.
4. The overall vertical tolerance of the wall (plumbness from top to bottom) shall not exceed 1/2" per 10' of wall height (for vertical walls).

2.5x7.5, 3.75x7.5 and 5.0x7.5 Module units:

1. Horizontal joint openings between panels shall be 1/2" (± 3/8").
2. Vertical joint openings between panels shall be 1/2" (± 3/8").
3. Horizontal alignment tolerance as the wall is constructed shall not exceed 3/4" when measured with a 15' straight edge.
4. The overall vertical tolerance of the wall (plumbness from top to bottom) shall not exceed 1/2" per 10' of wall height (for vertical walls).

CONSTRUCTION SPECIFICATIONS (CONTINUED)

Make repairs to panels already installed at job site by experienced personnel utilizing methods and materials recommended by the manufacturer and approved by the Engineer. Perform patching only when conditions exist which assure that the repaired area conforms to the remainder of the work with respect to appearance, strength and durability.

e. **Joint Material:**

2.5x5.0 and 5.0x5.0 Module units:

Place the horizontal joint material on the top of the front face of the T-WALL® unit prior to stacking a unit above it. The horizontal joint material should be placed lining up with the rear edge of the front face panel but not overhanging it.

Place the vertical joint material so that it is centered over the joint. Take the necessary action to assure that the material is not displaced during the backfill operation.

2.5x7.5, 3.75x7.5 and 5.0x7.5 Module units:

Place the neoprene rubber blocks on the top of the front face and rear stem of the T-WALL® unit prior to stacking a unit above it. Place the horizontal joint material so that it is centered over the joint. Take the necessary action to assure that the material is not displaced during the backfill operation.

Place the vertical joint material so that it is centered over the joint. Take the necessary action to assure that the material is not displaced during the backfill operation.

f. **Backfilling:** Fill the interior between the stem area of each successive course of the T-WALL® units with the select granular fill material specified. Fill units in no more than 12" uniform layers and thoroughly consolidate with a vibratory tamping device, after each layer is placed.

Select backfill placement shall closely follow the erection of each lift of T-WALL® units. Select backfill shall be placed in approximate equal amounts on each side of the stems to avoid displacement of the units. Backfill may be carefully discharged directly on top of the stems to facilitate this requirement. Generally, the backfill should be sloped so that surface drainage is away from the face of the unit. Lift thickness shall be decreased as needed to obtain the specified density. Backfill shall be compacted to at least 95% of maximum laboratory dry density, AASHTO T-99 (ASTM D-698). Whenever a compaction test fails, no additional backfill shall be placed over the area until the lift is re-compacted and a passing compaction test is achieved.

Embankment backfill (unclassified fill) placement beyond the stems shall closely follow the erection of each coarse of T-WALL® units. The backfill lifts shall be uniform in thickness and placed in accordance with PennDOT specifications.

Where the T-WALL® units are open faced and tiered in construction and plant growth is planned, top soil may be placed at the outer front edge of each tier to a depth of 6 inches maximum.

Place and compact the fill in front of the wall per project requirements as soon as possible but before the wall exceeds 10-ft high.

See Standard Drawing RC-12M for pay limits of Backfill at Structures.

g. **Dewatering:** Maintain workable conditions on a wet site during wall construction. Dewatering systems may be required depending upon the specific site conditions.

h. **Technical Assistance:** Where T-WALL® Retaining Wall Systems are constructed, arrange for a company representative to be present at the fabrication and project sites to assist the fabricator, Contractor, and Engineer until they are familiar and confident in casting, installation, and construction procedures. The Neel Company will provide a technical representative to assist in the event unusual problems or special circumstances arise.

4/13/2017

DESIGNER

THE NEEL COMPANY
8328-D TRAFORD LANE
SPRINGFIELD, VA 22152
PH: (703) 913-7858
FX: (703) 913-7859
Web: www.neelco.com

This drawing contains information proprietary to The Neel Company. The Neel Company is the exclusive licensee of the T-WALL® patent. © 2017, The Neel Company

DATE:	03-23-17
SCALE:	NO SCALE
DESIGNED:	CAA
DRAWN:	CAA/CJW
CHECKED:	CCG/KD
TNC JOB #:	TW3634
TNC SHT #:	3 OF 67

PA DOT DWG # 87-402 PE (REVISION IV)

COMMONWEALTH OF PENNSYLVANIA
DEPARTMENT OF TRANSPORTATION
BUREAU OF PROJECT DELIVERY

T-WALL® STANDARDS
PREFABRICATED T-WALL® RETAINING WALL SYSTEM

SHOP DRAWINGS
SPECIFICATIONS III

87-402 PE

DATE: 03-23-17 TNC JOB #: TW3634 PLOT DATE AND TIME: Thursday, March 23, 2017 10:55:21 CAD FILE NAME: 001 Cover & Specs r4-0.wx

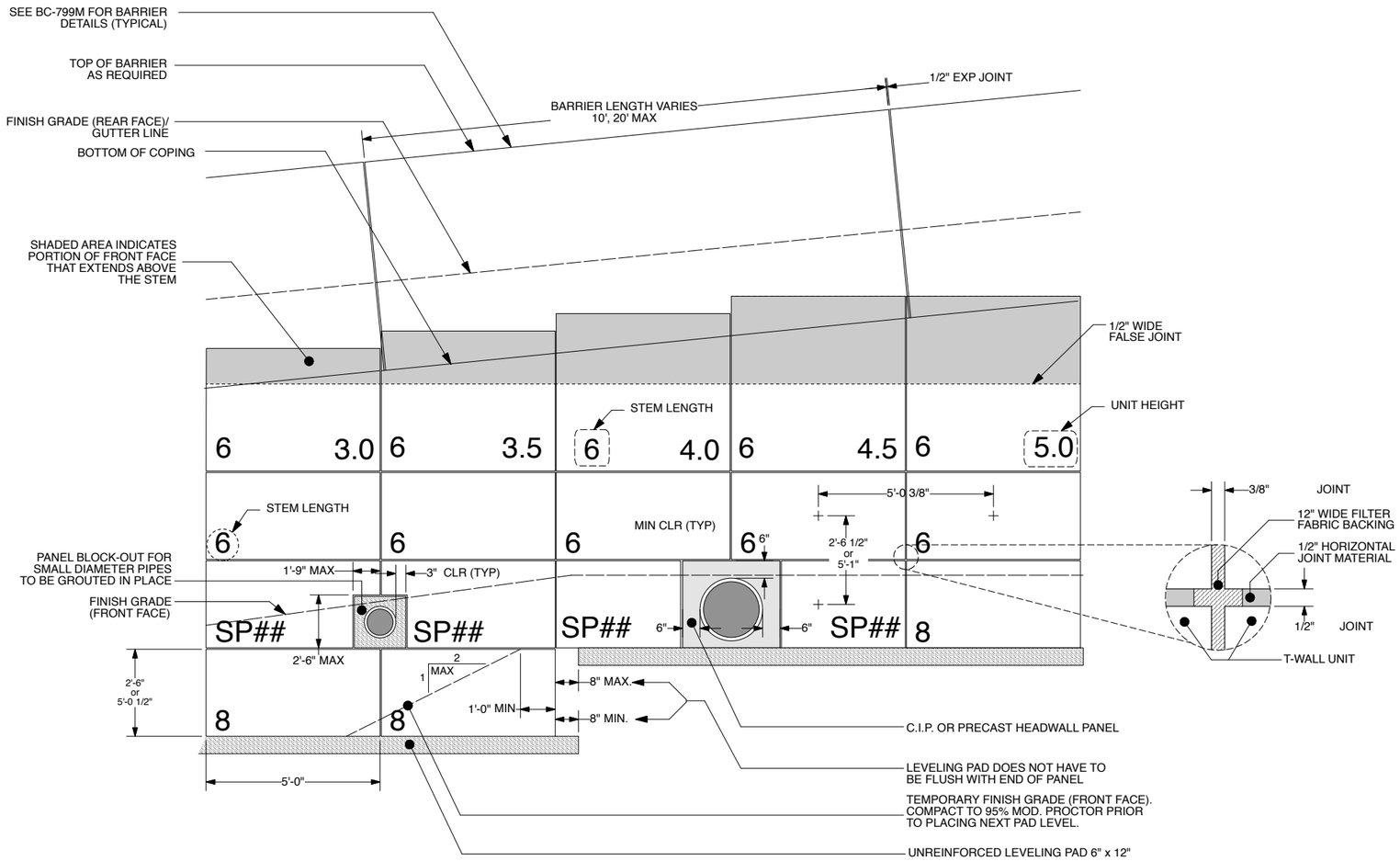

PARTIAL ELEVATION SHOWING TYPICAL DETAILS

(NO SCALE)

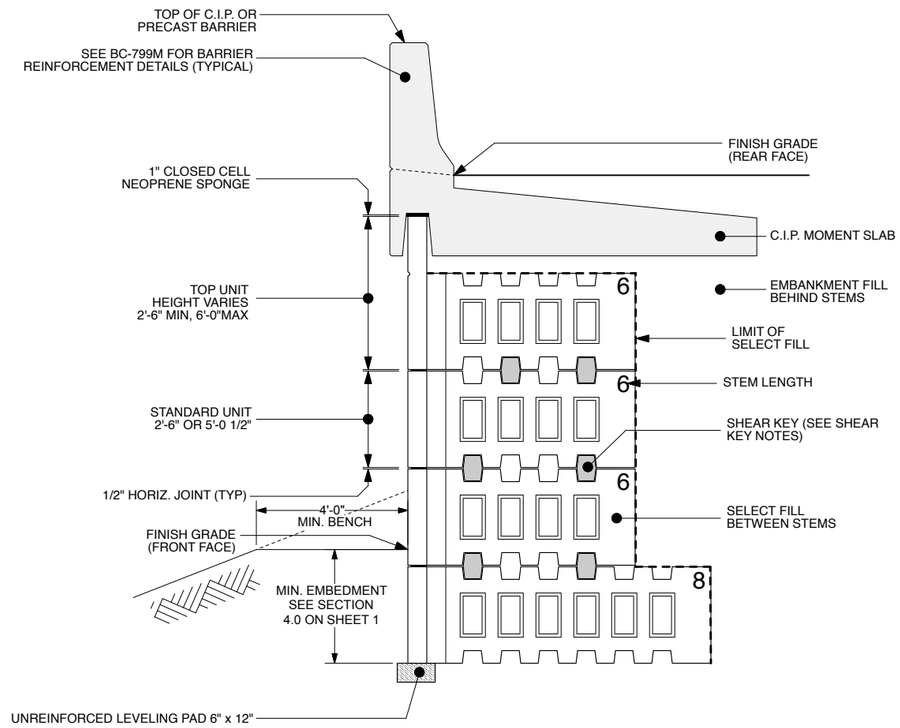

SECTION SHOWING TYPICAL DETAILS

(NOT ALL DETAILS APPLY TO EACH WALL SEE " TYPICAL SECTION AT MAXIMUM HEIGHT" FOR APPLICABLE DETAILS)

SHEAR KEY NOTES:

1. TYPICAL DESIGN CONDITIONS

TYPICAL LOADS AND CONFIGURATIONS REQUIRE THE FOLLOWING SHEAR KEY QUANTITIES:

EXTENDED FACE TOP UNITS	-	2 SHEAR KEYS
6' THRU 30' STEM STANDARD UNIT	-	2 SHEAR KEYS (MIN)

2. SPECIAL DESIGN CONDITIONS

OTHER LOADS AND CONFIGURATIONS MAY REQUIRE MORE OR LESS SHEAR KEYS. IN THESE CASES, SHEAR KEY REQUIREMENTS WILL BE EXPLICITLY DEFINED ON A PROJECT SPECIFIC BASIS.

3. LOCATION

THE LOCATION OF A SHEAR KEY ALONG THE STEM OF A T-WALL® UNIT IS NOT CRITICAL, AND DOES NOT HAVE TO BE PLACED EXACTLY AS SHOWN ON THE PROJECT DRAWINGS.

FOR EXAMPLE, IF THE DRAWINGS SHOW SHEAR KEYS IN THE FIRST AND THIRD SHEAR KEY NOTCHES, THE SHEAR KEYS CAN BE PLACED IN THE SECOND AND FOURTH NOTCHES AND STILL PERFORM THEIR INTENDED DESIGN FUNCTION.

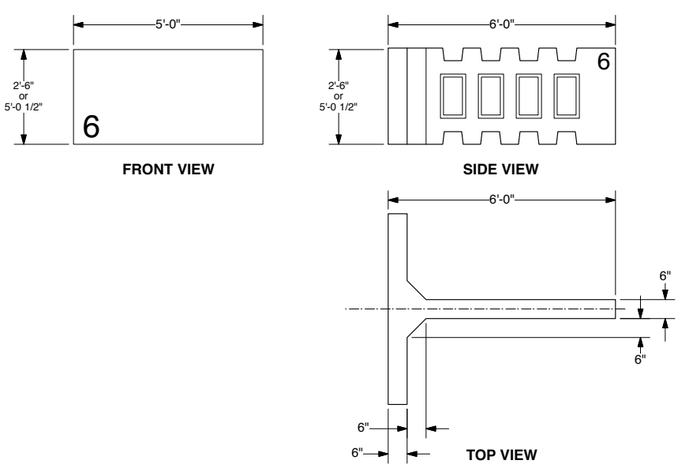

TYPICAL 6' STEM T-WALL UNIT

NOTES:

1. TYPICAL PIPE PENETRATION SHOWN. LARGER PIPES WILL BE ENGINEERED ON A PROJECT SPECIFIC BASIS.
2. OUTLET PIPE JOINTS SHALL BE WATERTIGHT. OUTLET PIPES SHALL MEET 100 YEAR SERVICE LIFE CRITERIA.

4/13/2017

DESIGNER

THE NEEL COMPANY
8328-D TRAFORD LANE
SPRINGFIELD, VA 22152
PH: (703) 913-7858
FX: (703) 913-7859
Web: www.neelco.com

This drawing contains information proprietary to The Neel Company. The Neel Company is the exclusive licensee of the T-WALL® patent. © 2017, The Neel Company

DATE:	03-23-17
SCALE:	NO SCALE
DESIGNED:	CAA
DRAWN:	CAA/ACS
CHECKED:	CCG/KD
TNC JOB #:	TW3634
TNC SHT #:	4 OF 67

PA DOT DWG # 87-402 PE (REVISION IV)

COMMONWEALTH OF PENNSYLVANIA
DEPARTMENT OF TRANSPORTATION
BUREAU OF PROJECT DELIVERY

T-WALL® STANDARDS
PREFABRICATED T-WALL® RETAINING WALL SYSTEM

SHOP DRAWINGS
TYPICAL DETAILS

SHEET 4 OF 67

87-402 PE

DATE: 03-23-17 TNC JOB #: TW3634 PLOT DATE AND TIME: Wednesday, March 22, 2017 15:45:21 CAD FILE NAME: 004 Typ Dtls 1 HWY r4-0.vwx

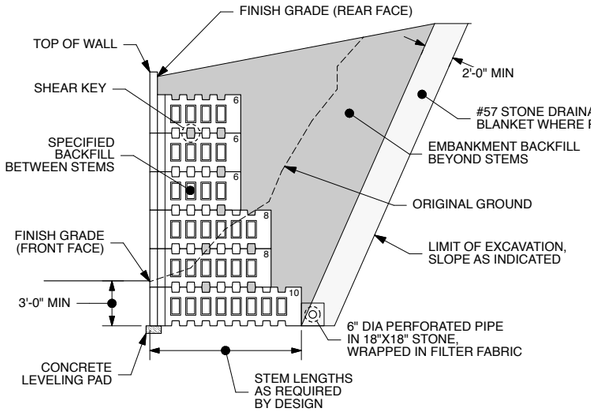

TYPICAL CUT SECTION

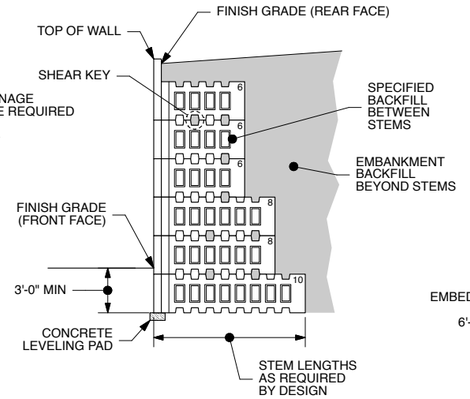

TYPICAL FILL SECTION

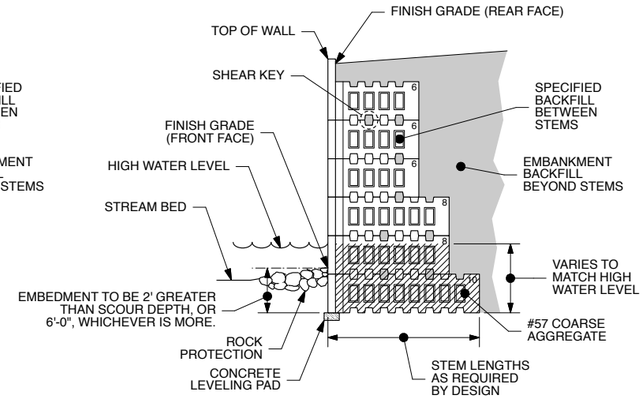

TYPICAL SECTION AT STREAM

NOTE:
THE NEEL COMPANY WILL PROVIDE CALCULATIONS BASED ON THE SPECIFIC SITE CONDITIONS, THE DESIGN FLOOD LEVEL AND 3' OF DIFFERENTIAL WATER LEVEL.

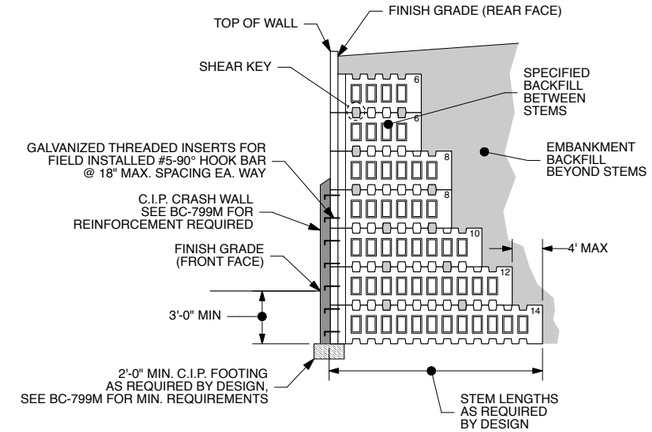

TYPICAL SECTION AT CRASH WALL

NOTES:
1. PROVIDE 4" DIA. WEEP HOLES THROUGH C.I.P. CRASH WALL AT 10' MAX. SPACING.
2. SEE BC-799M SHEET 3 FOR CRASH WALL REQUIREMENTS NOTES.

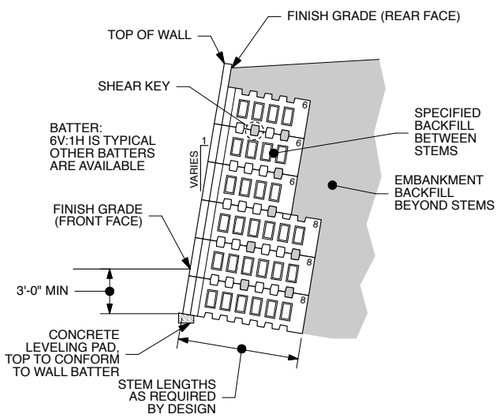

TYPICAL BATTERED SECTION

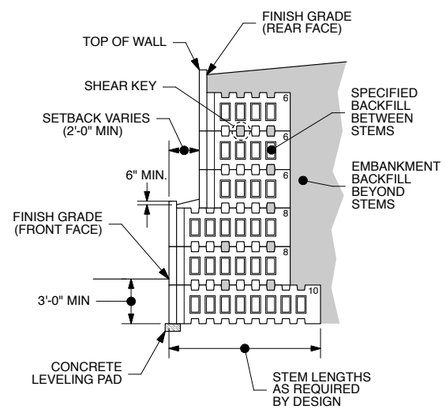

TYPICAL TIERED SECTION

NOTE:
THE NEEL COMPANY SHALL PROVIDE DESIGN CALCULATIONS BASED ON SPECIFIC SITE CONDITIONS OF EACH PROJECT.

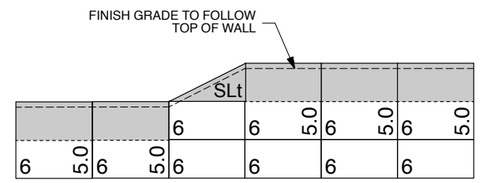

TOP OF WALL USING TRIANGULAR TOP UNITS

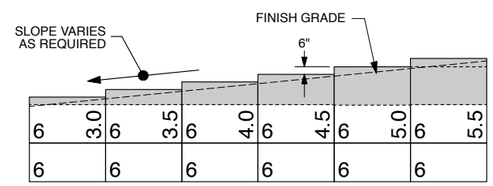

TOP OF WALL USING STANDARD TOP UNITS

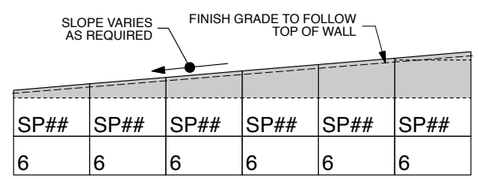

TOP OF WALL USING SLOPE TOP UNITS
THIS OPTION MAY NOT BE AVAILABLE FOR ALL PROJECTS

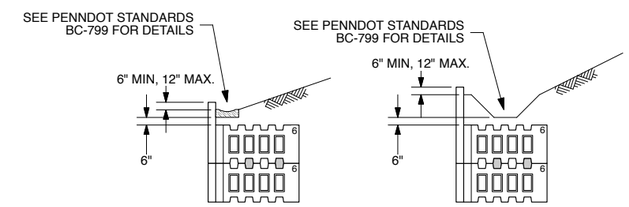

PAVED DITCH DETAIL **DRAINAGE DITCH**

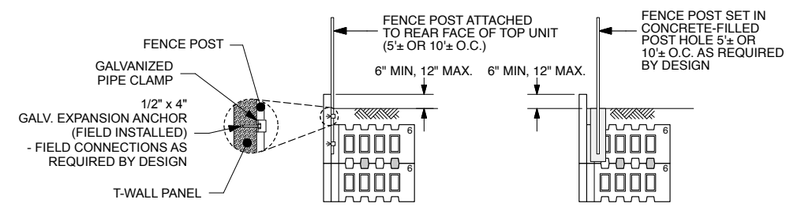

FENCE DETAIL B **FENCE DETAIL A**

PA DOT DWG # 87-402 PE (REVISION IV)

COMMONWEALTH OF PENNSYLVANIA
DEPARTMENT OF TRANSPORTATION
BUREAU OF PROJECT DELIVERY

T-WALL® STANDARDS
PREFABRICATED T-WALL® RETAINING WALL SYSTEM

SHOP DRAWINGS
TYPICAL DETAILS
SECTIONS AND TOP OF WALL OPTIONS

4/13/2017

DESIGNER

THE NEEL COMPANY
8328-D TRAFORD LANE
SPRINGFIELD, VA 22152
PH: (703) 913-7858
FX: (703) 913-7859
Web: www.neelco.com

This drawing contains information proprietary to The Neel Company. The Neel Company is the exclusive licensee of the T-WALL® patent. © 2017, The Neel Company

DATE:	03-23-17
SCALE:	NO SCALE
DESIGNED:	CAA
DRAWN:	CAA/ACS
CHECKED:	CCG/KD
TNC JOB #:	TW3634
TNC SHT #:	5 OF 67

SHEET 5 OF 67

87-402 PE

DATE: 03-23-17 TNC JOB #: TW3634 PLOT DATE AND TIME: Wednesday, March 22, 2017 15:45:11 CAD FILE NAME: 005 Typ Dtls 2 HWY r4-0.vwx

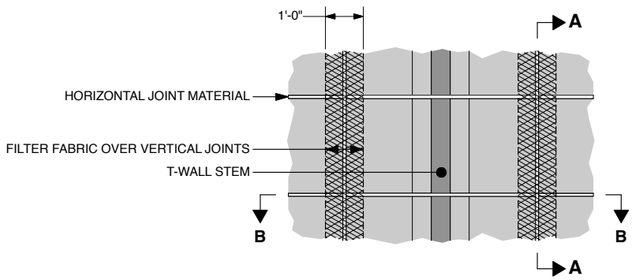

PARTIAL ELEVATION - REAR FACE

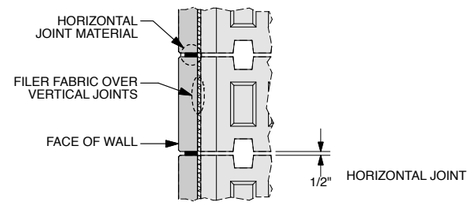

SECTION A-A

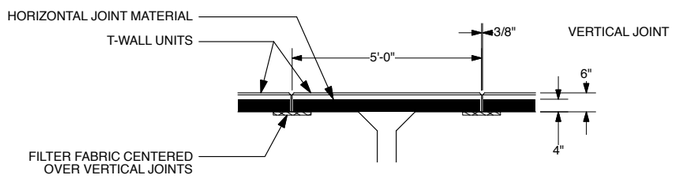

SECTION B-B

JOINT NOTES:

1. HORIZONTAL JOINT:
   - 1/2" x 4" x 5'-0" HORIZONTAL JOINT MATERIAL
2. VERTICAL JOINT:
   - 3/8" SPACE
   - 12" FILTER FABRIC CENTERED AT JOINT CENTERLINE.

HORIZONTAL AND VERTICAL JOINTS

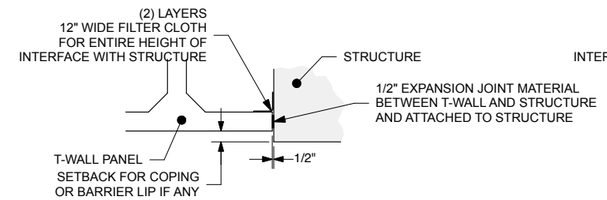

PARTIAL PLAN - FLUSH INTERFACE

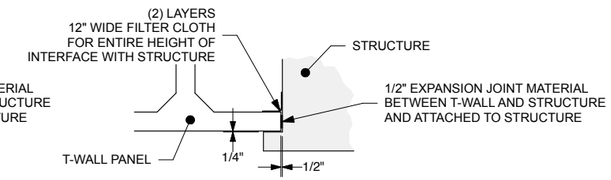

PARTIAL PLAN - OVERLAP INTERFACE

INTERFACE WITH STRUCTURE

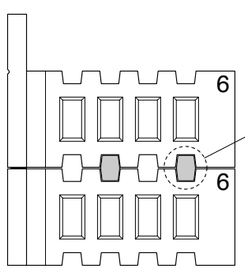

SHEAR KEY WRAPPED IN POLYETHYLENE FOAM WRAP. SEE DETAILS BELOW ON THIS SHEET.

PARTIAL SECTION

SHEAR KEY NOTES:

1. FOAM WRAP MAY BE ADDED OR REMOVED TO AID IN SHIMMING AND ALIGNING, HOWEVER SHEAR KEY MUST FIT SNUG IN THE SHEAR KEY BLOCKOUT WHEN UNIT IS IN ITS FINAL POSITION.
2. FOR MINIMUM NUMBER OF SHEAR KEYS REQUIRED PER UNIT, SEE NOTES ON SHEET 4 OF 23.

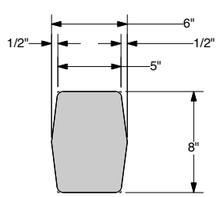

SHEAR KEY DIMENSIONS

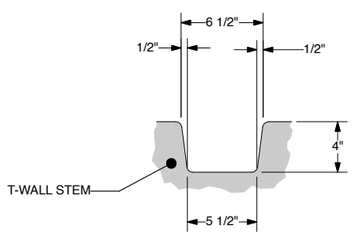

SHEAR KEY BLOCKOUT DIM's

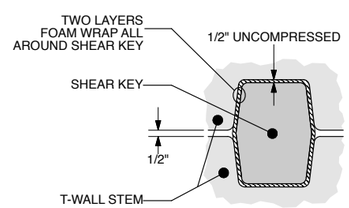

SHEAR KEY / JOINT MATERIAL ARRANGEMENT

SHEAR KEY DETAILS

4/13/2017

DESIGNER

THE NEEL COMPANY
8328-D TRAFORD LANE
SPRINGFIELD, VA 22152
PH: (703) 913-7858
FX: (703) 913-7859
Web: www.neelco.com

This drawing contains information proprietary to The Neel Company. The Neel Company is the exclusive licensee of the T-WALL® patent. © 2017, The Neel Company

DATE:	03-23-17
SCALE:	NO SCALE
DESIGNED:	CAA
DRAWN:	CAA/ACS
CHECKED:	CCG/KD
TNC JOB #:	TW3634
TNC SHT #:	6 OF 67

PA DOT DWG # 87-402 PE (REVISION IV)

COMMONWEALTH OF PENNSYLVANIA
DEPARTMENT OF TRANSPORTATION
BUREAU OF PROJECT DELIVERY

T-WALL® STANDARDS
PREFABRICATED T-WALL® RETAINING WALL SYSTEM

SHOP DRAWINGS
TYPICAL DETAILS
SHEAR KEY, JOINT & STRUCTURE INTERFACE DETAILS

SHEET 6 OF 67

87-402 PE

DATE: 03-23-17 TNC JOB #: TW3634 PLOT DATE AND TIME: Wednesday, March 22, 2017 15:45:01 CAD FILE NAME: 006 Typ Dtls 3 HWY r4-0.vwx

NOTE:
STANDARD UNITS WITH A " C " DESIGNATION INDICATE CORNER UNITS WHERE SIDEPAN AND SHEAR KEY BLOCKOUTS HAVE BEEN OMITTED TO PERMIT BOLTING OF SHORT STEM UNITS (2.25C AND 2.75C)

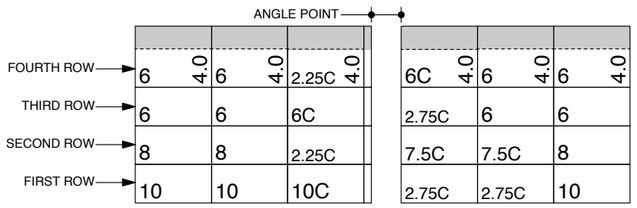

PARTIAL ELEVATION

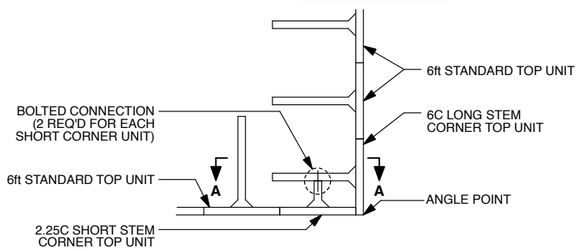

PARTIAL PLAN - FOURTH ROW

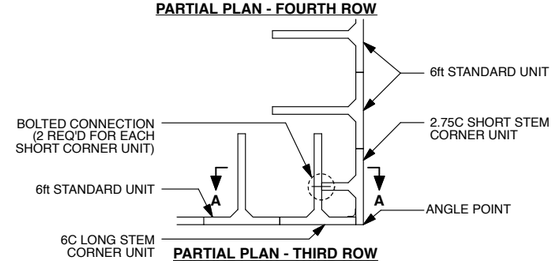

PARTIAL PLAN - THIRD ROW

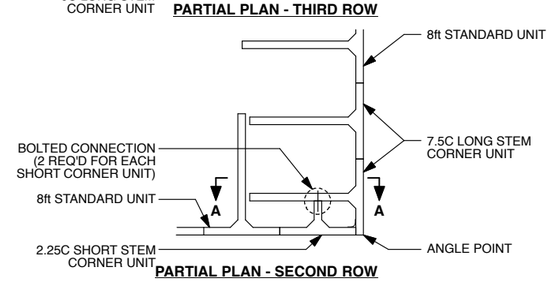

PARTIAL PLAN - SECOND ROW

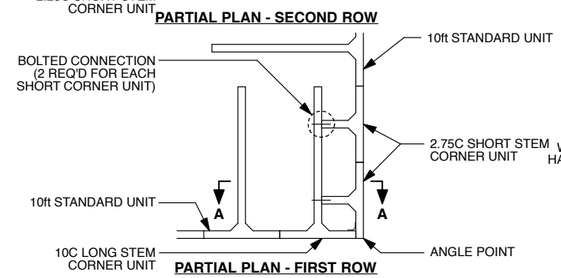

PARTIAL PLAN - FIRST ROW

STEM LENGTHS VARY - SEE SPECIFIC ELEVATIONS FOR PROPER UNITS

TYPICAL CORNER UNIT ARRANGEMENT

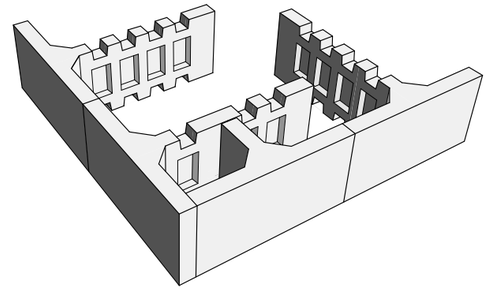

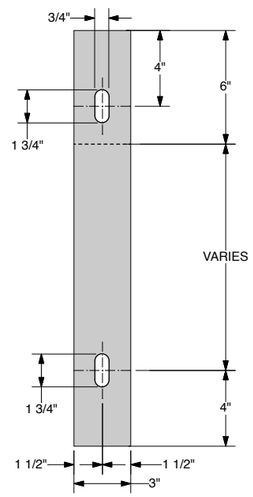

PLAN

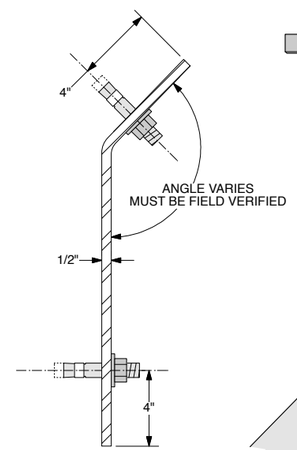

CROSS SECTION

PLATE DETAILS

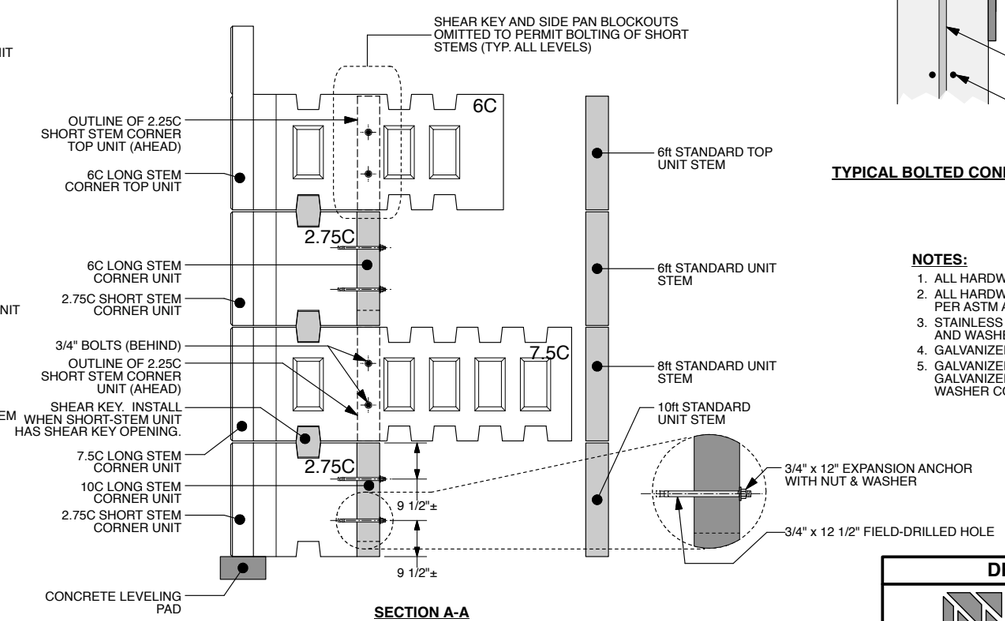

SECTION A-A

TYPICAL 90° CORNER UNIT ARRANGEMENT

4/13/2017

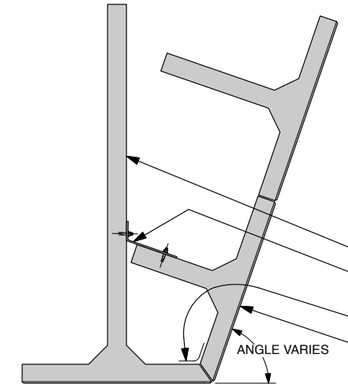

PART PLAN - FIRST ROW

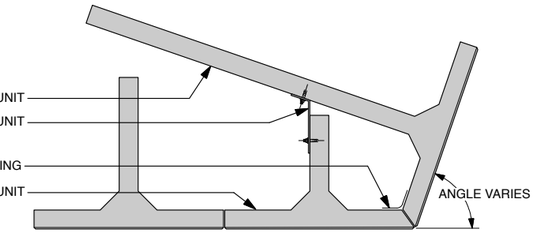

PART PLAN - SECOND ROW

NOTE:
ALL SHORT STEM UNITS MUST BE BOLTED TO THE LONG STEM UNIT BASED ON THE WALL HEIGHT

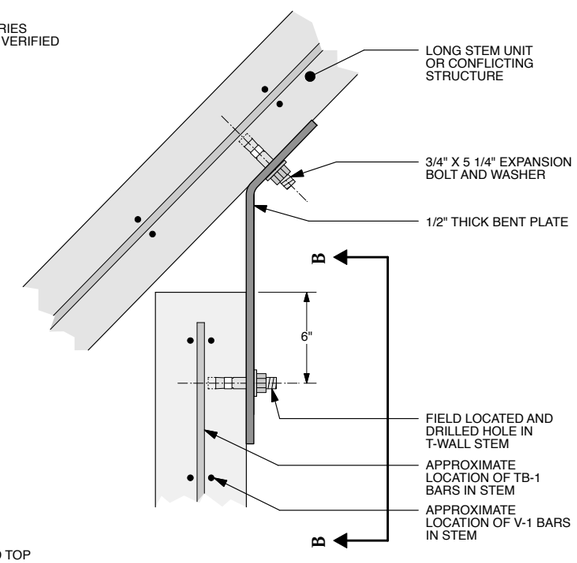

TYPICAL BOLTED CONNECTION FOR CULVERT

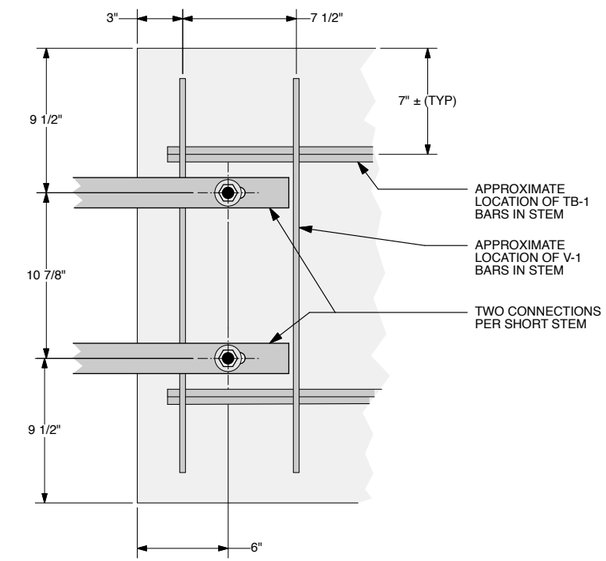

VIEW B-B

TYPICAL ANGLE POINT DETAIL

NOTES:

1. ALL HARDWARE TO BE PROVIDED BY THE PRECASTER.
2. ALL HARDWARE TO BE STAINLESS STEEL OR GALVANIZED PER ASTM A153.
3. STAINLESS STEEL, ANCHOR BODY, ANCHOR ELEMENT, NUT AND WASHER CONFORM TO AISI 304 OR AISI 316.
4. GALVANIZED STEEL CONFORMS TO ASTM A36.
5. GALVANIZED BOLT CONFORMS TO ASTM A325 TYPE 1; GALVANIZED NUT CONFORMS TO ASTM A563; GALVANIZED WASHER CONFORMS TO ASTM F436.

PA DOT DWG # 87-402 PE (REVISION IV)

COMMONWEALTH OF PENNSYLVANIA
DEPARTMENT OF TRANSPORTATION
BUREAU OF PROJECT DELIVERY

T-WALL® STANDARDS
PREFABRICATED T-WALL® RETAINING WALL SYSTEM

SHOP DRAWINGS
TYPICAL DETAILS
CORNER DETAIL (I)

DESIGNER
THE NEEL COMPANY
8328-D TRAFORD LANE
SPRINGFIELD, VA 22152
PH: (703) 913-7858
FX: (703) 913-7859
Web: www.neelco.com

This drawing contains information proprietary to The Neel Company. The Neel Company is the exclusive licensee of the T-WALL® patent.
© 2017, The Neel Company

DATE:	03-23-17
SCALE:	NO SCALE
DESIGNED:	CAA
DRAWN:	CAA
CHECKED:	CCG/KD
TNC JOB #:	TW3634
TNC SHT #:	7 OF 67

SHEET 7 OF 67

87-402 PE

DATE: 03-23-17 TNC JOB #: TW3634 PLOT DATE AND TIME: Wednesday, March 22, 2017 15:44:51 CAD FILE NAME: 007 Typ Dtls 4 HWY Corner 1 r4-0.vwx

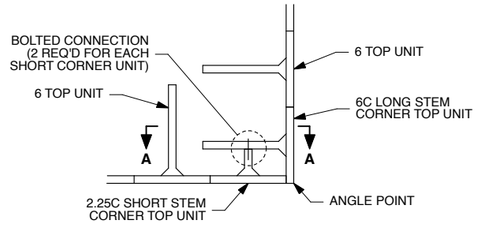

PARTIAL PLAN - FIFTH ROW

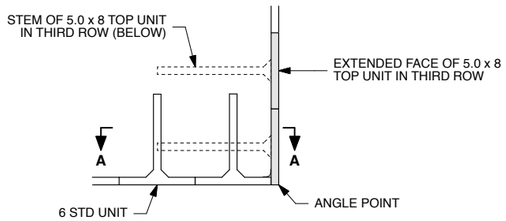

PARTIAL PLAN - FOURTH ROW

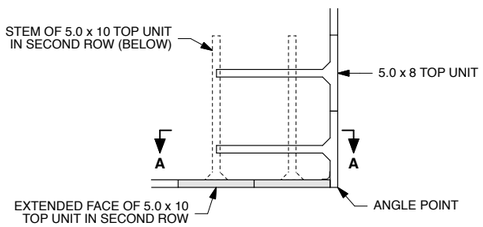

PARTIAL PLAN - THIRD ROW

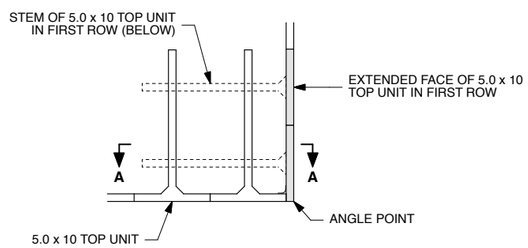

PARTIAL PLAN - SECOND ROW

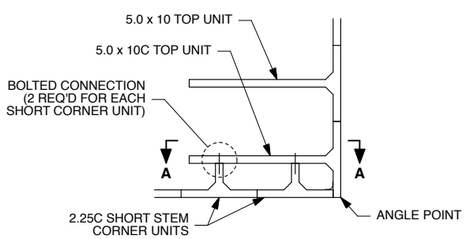

PARTIAL PLAN - FIRST ROW

TYPICAL CORNER UNIT ARRANGEMENT
STEM LENGTHS VARY - SEE SPECIFIC ELEVATIONS FOR PROPER UNITS

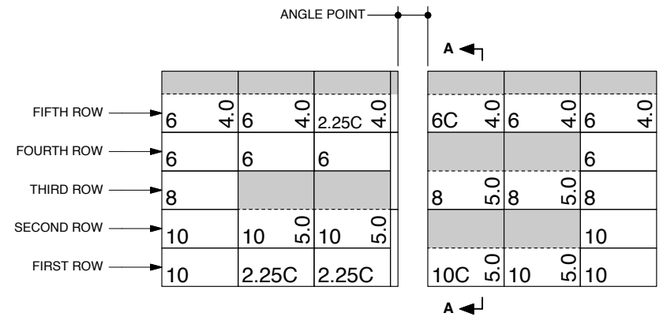

PARTIAL ELEVATION

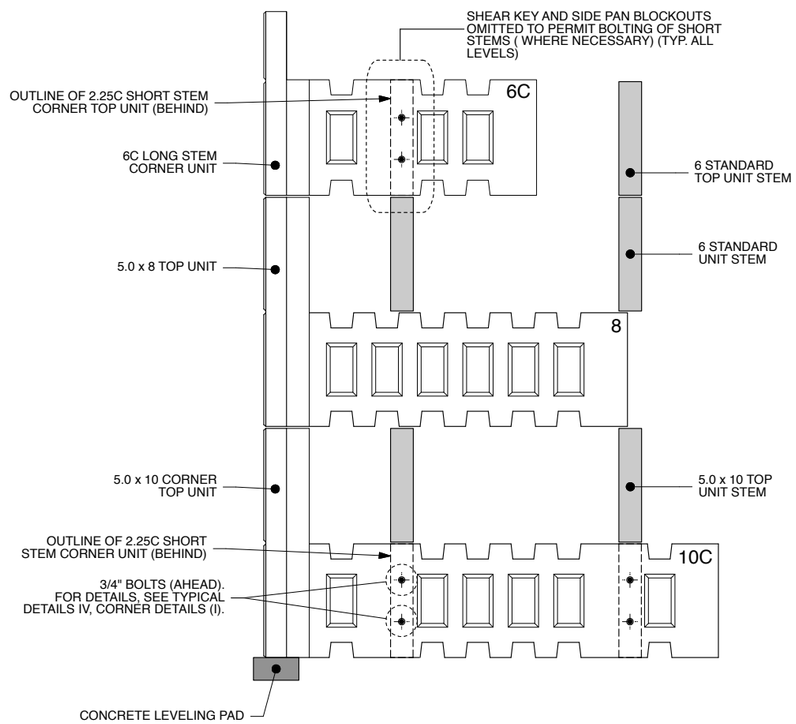

SECTION A-A

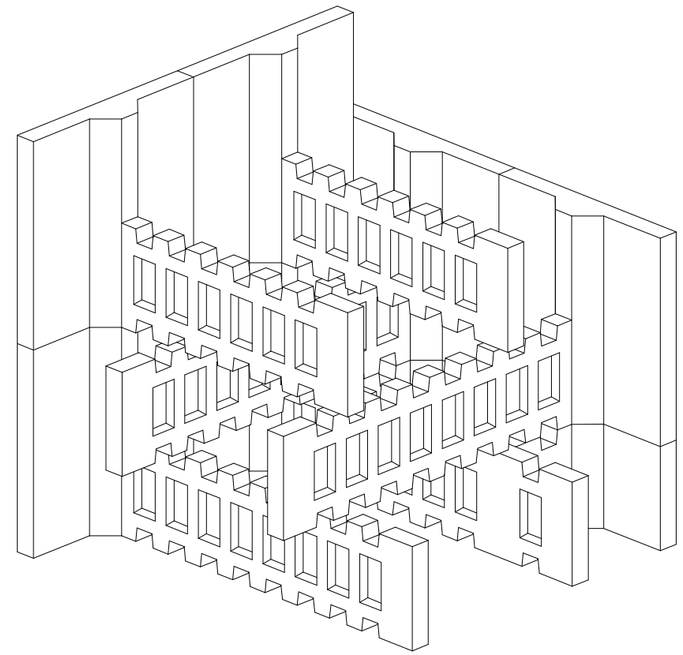

NOTES:

1. THE NEEL COMPANY WILL PROVIDE CALCULATIONS AND DESIGN FOR THIS DETAIL ON A PROJECT BY PROJECT BASIS.
2. ALL HARDWARE TO BE PROVIDED BY THE PRECASTER.
3. ALL HARDWARE TO BE STAINLESS STEEL OR GALVANIZED PER ASTM A153.
4. FOR BOLTED CONNECTION DETAILS, SEE SHEET 7 OF 23.

PA DOT DWG # 87-402 PE (REVISION IV)

COMMONWEALTH OF PENNSYLVANIA
DEPARTMENT OF TRANSPORTATION
BUREAU OF PROJECT DELIVERY

T-WALL® STANDARDS
PREFABRICATED T-WALL® RETAINING WALL SYSTEM

SHOP DRAWINGS
TYPICAL DETAILS
CORNER DETAIL (II)

4/13/2017

DESIGNER

THE NEEL COMPANY
8328-D TRAFORD LANE
SPRINGFIELD, VA 22152
PH: (703) 913-7858
FX: (703) 913-7859
Web: www.neelco.com

This drawing contains information proprietary to The Neel Company. The Neel Company is the exclusive licensee of the T-WALL® patent. © 2017, The Neel Company

DATE:	03-23-17
SCALE:	NO SCALE
DESIGNED:	CAA
DRAWN:	CAA
CHECKED:	CCG/KD
TNC JOB #:	TW3634
TNC SHT #:	8 OF 67

SHEET 8 OF 67

87-402 PE

DATE: 03-23-17 TNC JOB #: TW3634 PLOT DATE AND TIME: Wednesday, March 22, 2017 15:44:39 CAD FILE NAME: 008 Typ Dtls 5 HWY Corner 2 r4-0.vwx

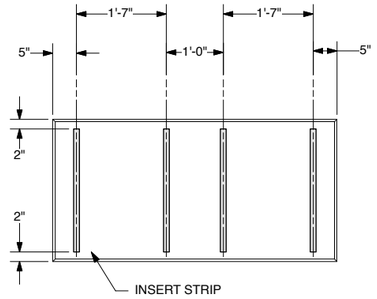

FRONT VIEW

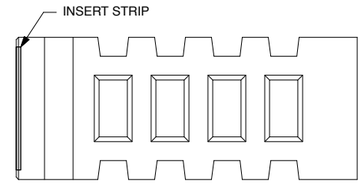

SIDE VIEW

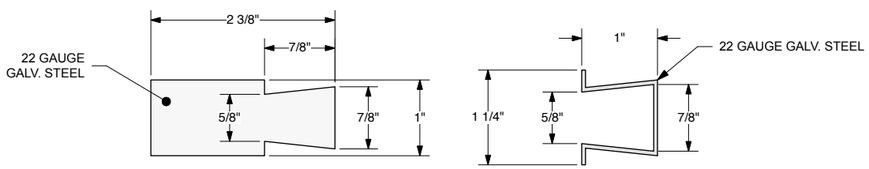

DOVETAIL STONE ANCHOR
SCALE: 1:1

INSERT STRIP
SCALE: 1:1

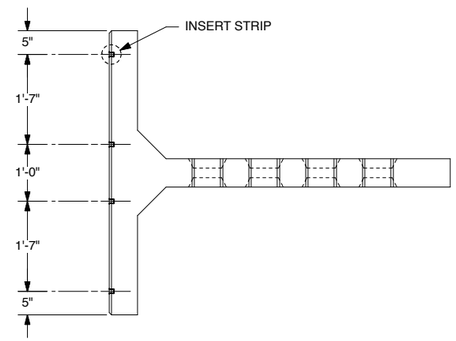

TOP VIEW

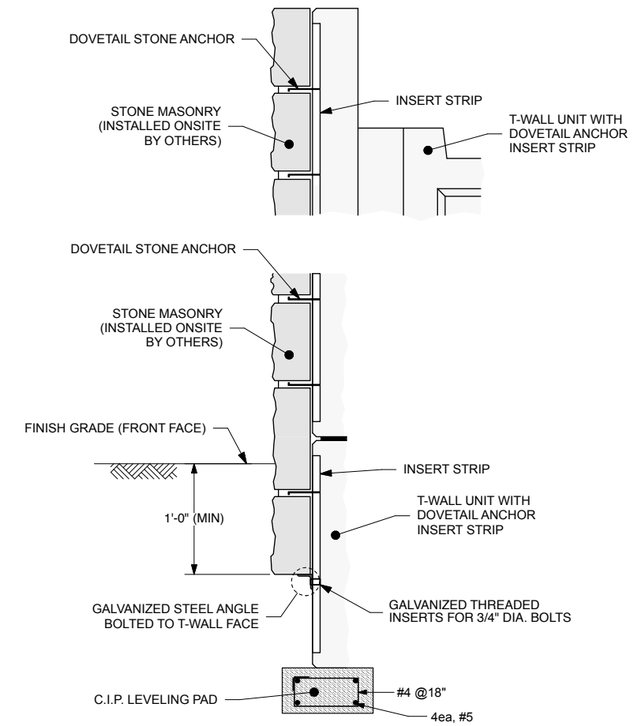

PARTIAL WALL SECTION
SCALE: 1:10

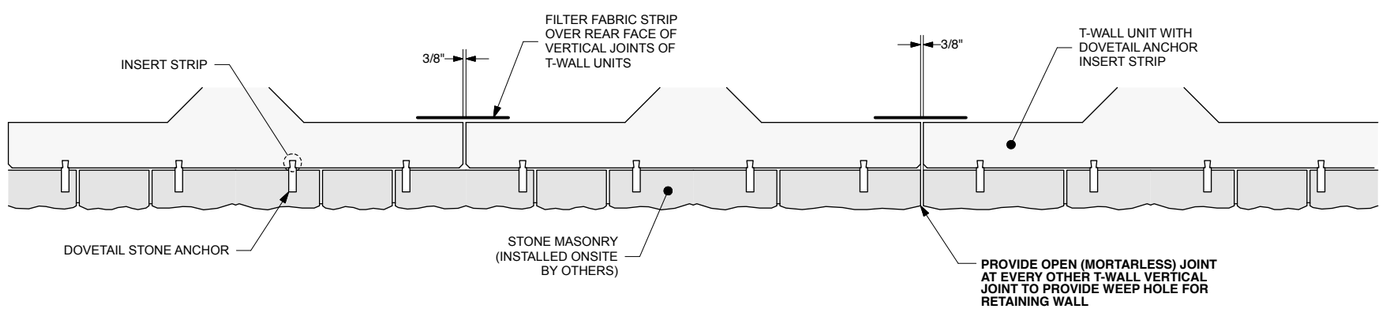

PARTIAL HORIZONTAL SECTION
SCALE: 1:10

NOTE:
PROVIDE 4" DIA. PVC WEEP HOLES AT
10' MAX. SPACING, ALTERNATING WITH
OPEN MORTERLESS JOINTS.

4/13/2017

PA DOT DWG # 87-402 PE (REVISION IV)

COMMONWEALTH OF PENNSYLVANIA
DEPARTMENT OF TRANSPORTATION
BUREAU OF PROJECT DELIVERY

T-WALL® STANDARDS
PREFABRICATED T-WALL® RETAINING WALL SYSTEM

SHOP DRAWINGS
TYPICAL DETAILS
STONE MASONRY VENEER FACING

DESIGNER

THE NEEL COMPANY
8328-D TRAFORD LANE
SPRINGFIELD, VA 22152
PH: (703) 913-7858
FX: (703) 913-7859
Web: www.neelco.com

This drawing contains information proprietary to The Neel Company. The Neel Company is the exclusive licensee of the T-WALL® patent. © 2017, The Neel Company

DATE:	03-23-17
SCALE:	NO SCALE
DESIGNED:	CAA
DRAWN:	CAA/ACS
CHECKED:	CCG/KD
TNC JOB #:	TW3634
TNC SHT #:	9 OF 67

SHEET 9 OF 67

87-402 PE

DATE: 03-23-17 TNC JOB #: TW3634 PLOT DATE AND TIME: Wednesday, March 22, 2017 15:44:29 CAD FILE NAME: 009 Typ Dtls 6 HWY Stone Facing r4-0.vwx

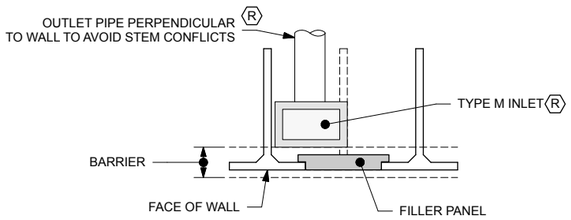

PARTIAL PLAN

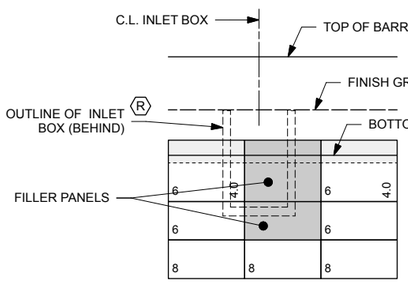

PART ELEVATION (FRONT FACE)

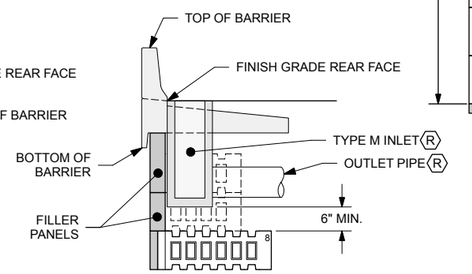

PART SECTION

DRAINAGE PIPE PERPENDICULAR TO WALL FACE

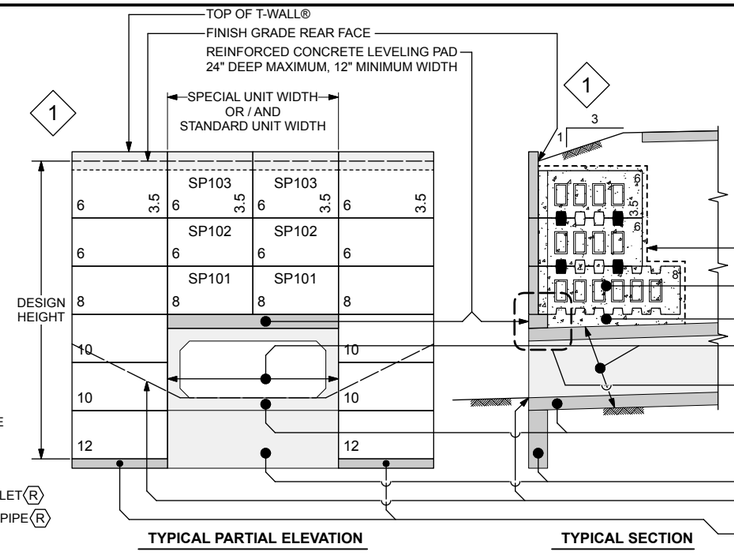

TYPICAL PARTIAL ELEVATION **TYPICAL SECTION**

TYPICAL T-WALL® ON EXISTING OR PROPOSED CULVERT WITHOUT LIP

CULVERT NOTES:

1. THE T-WALL® UNITS AND CULVERT DESIGN SHOWN HERE ARE FOR CONCEPT ONLY. ACTUAL T-WALL® UNITS SHALL BE DESIGNED TO FIT AROUND THE CULVERT(S) ON A PROJECT SPECIFIC CASES. ALIGN T-WALL® VERTICAL JOINTS WITH THE SIDES OF THE CULVERT.

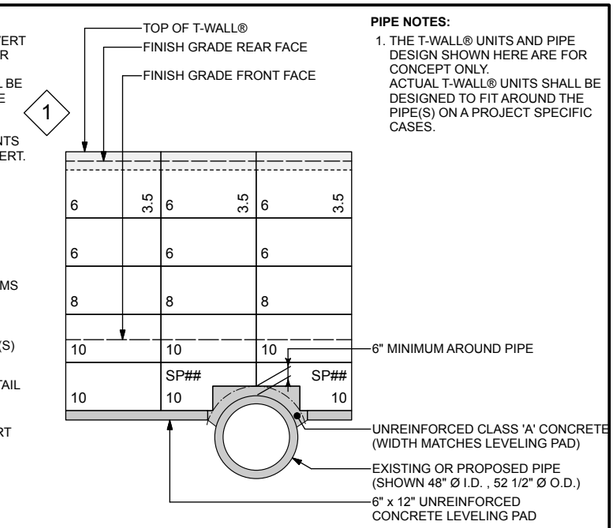

TYPICAL PARTIAL ELEVATION WITH PIPE

TYPICAL T-WALL® ON EXISTING OR PROPOSED PIPE

PIPE NOTES:

1. THE T-WALL® UNITS AND PIPE DESIGN SHOWN HERE ARE FOR CONCEPT ONLY. ACTUAL T-WALL® UNITS SHALL BE DESIGNED TO FIT AROUND THE PIPE(S) ON A PROJECT SPECIFIC CASES.

1 **NOTE: PRESSURE DISTRIBUTION FROM WALL CROSSING CULVERTS PER DESIGN SPECIFICATION - SECTION 6.0 ON SHEET 2 OF 67**

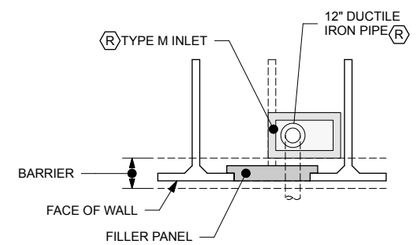

PART PLAN

LEGEND

(R) ROADWAY ITEM

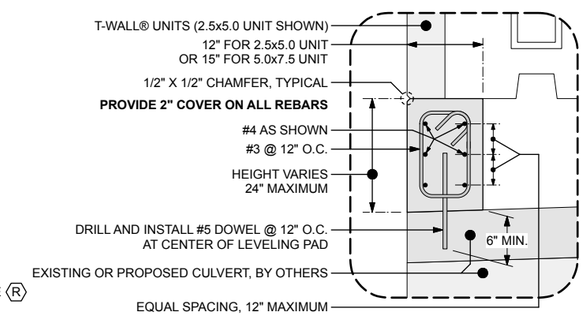

CULVERT LEVELING PAD DETAIL

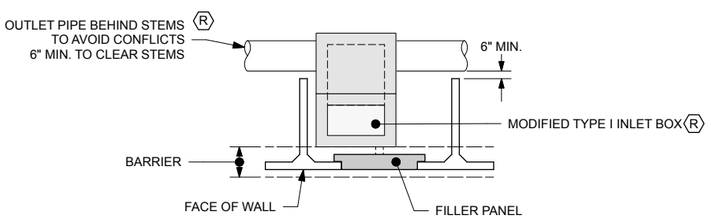

PART PLAN

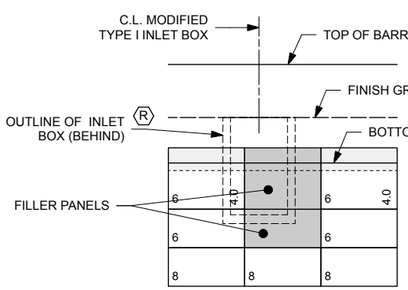

PART ELEVATION (FRONT FACE)

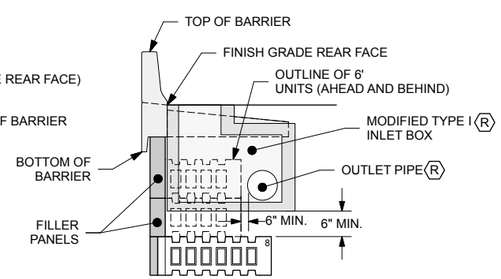

PART SECTION

DRAINAGE PIPE PARALLEL TO WALL FACE

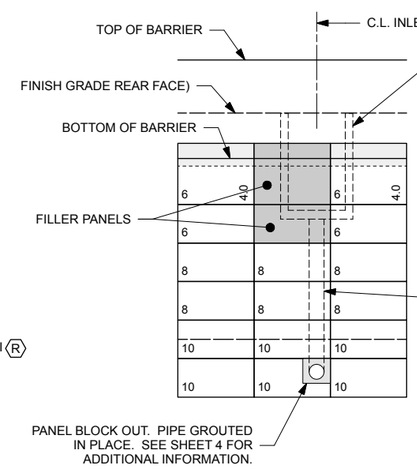

PART ELEVATION (FRONT FACE)

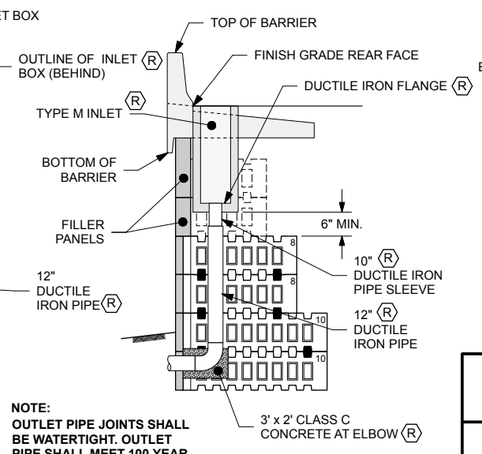

NOTE:
OUTLET PIPE JOINTS SHALL BE WATERTIGHT. OUTLET PIPE SHALL MEET 100 YEAR SERVICE LIFE CRITERIA.

PART SECTION

DRAINAGE PIPE THRU WALL FACE

4/13/2017

PA DOT DWG # 87-402 PE (REVISION IV)

COMMONWEALTH OF PENNSYLVANIA
DEPARTMENT OF TRANSPORTATION
BUREAU OF PROJECT DELIVERY

T-WALL® STANDARDS
PREFABRICATED T-WALL® RETAINING WALL SYSTEM

SHOP DRAWINGS
TYPICAL DETAILS
DRAINAGE STRUCTURES (I)

DESIGNER
THE NEEL COMPANY
8328-D TRAFORD LANE
SPRINGFIELD, VA 22152
PH: (703) 913-7858
FX: (703) 913-7859
Web: www.neelco.com

This drawing contains information proprietary to The Neel Company. The Neel Company is the exclusive licensee of the T-WALL® patent. © 2017, The Neel Company

DATE:	03-23-17
SCALE:	NO SCALE
DESIGNED:	CAA
DRAWN:	CAA/ACS
CHECKED:	CCG/KD
TNC JOB #:	TW3634
TNC SHT #:	10 OF 67

DATE: 03-23-17 TNC JOB #: TW3634 PLOT DATE AND TIME: Friday, April 28, 2017 14:53:53 CAD FILE NAME: 010 Typ Dtls 7 Drainage 1 r4-0B.vwx

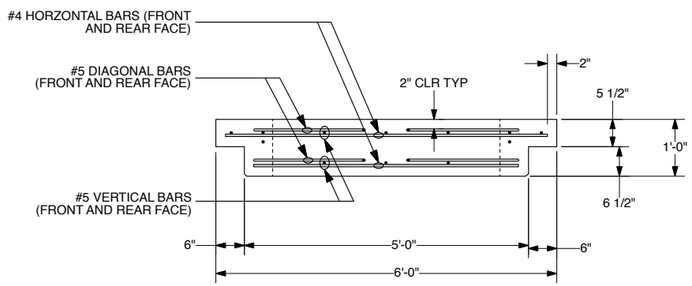

TYPICAL HORIZONTAL SECTION

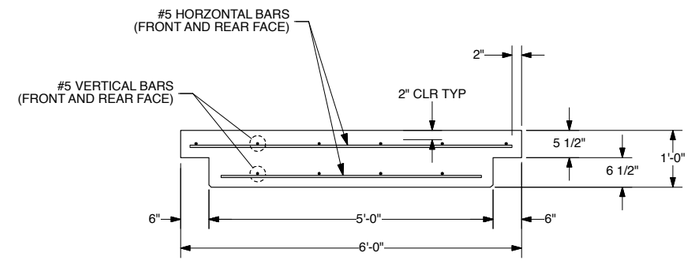

TYPICAL HORIZONTAL SECTION

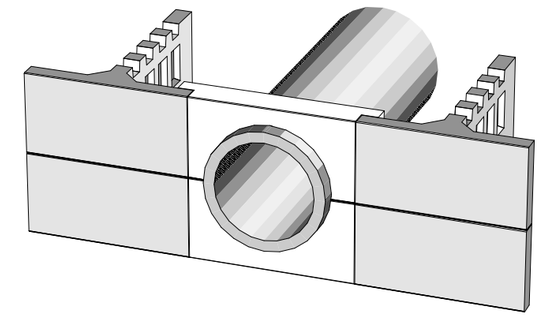

PIPE PENETRATION
(SEE SHEET 4 OF 16 FOR MORE DETAILS)

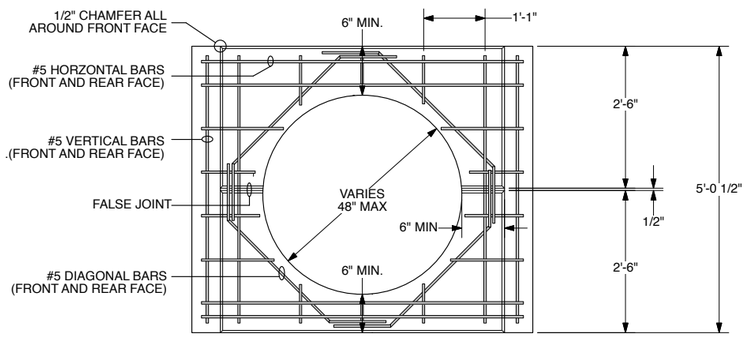

ELEVATION (FRONT FACE)

TYPICAL 5'-0" x 5'-0"
PRECAST OR C.I.P. HEADWALL

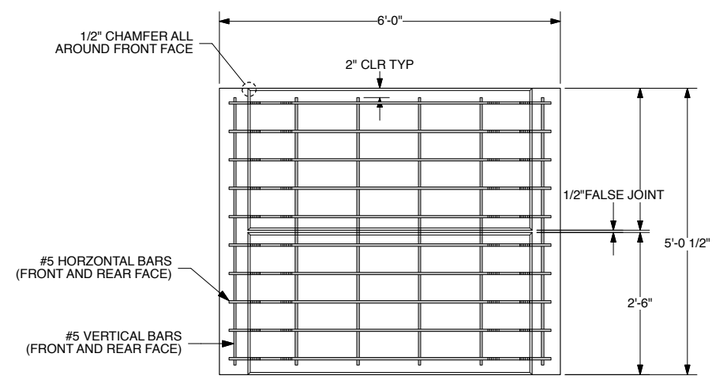

ELEVATION (FRONT FACE)

TYPICAL PRECAST OR C.I.P. FILLER PANEL

NOTES:

1. DESIGN SHOWN IS FOR CONCEPT ONLY. ACTUAL PANEL DIMENSIONS AND REINFORCING SHALL BE DESIGNED FOR PROJECT SPECIFIC CASES.
2. FOR JOINT BETWEEN FILLER PANEL AND T-WALL REAR FACE, USE FIBER EXPANSION JOINT MATERIAL SPECIFIED IN T-WALL CONSTRUCTION AND MANUFACTURING SPECIFICATIONS 2.0d (SHEET 2).
3. SEE BC-736M FOR MIN. LAP SPLICE LENGTH OF #5 DIAGONAL BARS.

PA DOT DWG # 87-402 PE (REVISION IV)

COMMONWEALTH OF PENNSYLVANIA
DEPARTMENT OF TRANSPORTATION
BUREAU OF PROJECT DELIVERY

T-WALL® STANDARDS
PREFABRICATED T-WALL® RETAINING WALL SYSTEM

SHOP DRAWINGS
TYPICAL DETAILS
DRAINAGE STRUCTURES (II)

4/13/2017

DESIGNER

THE NEEL COMPANY
8328-D TRAFORD LANE
SPRINGFIELD, VA 22152
PH: (703) 913-7858
FX: (703) 913-7859
Web: www.neelco.com

This drawing contains information proprietary to The Neel Company. The Neel Company is the exclusive licensee of the T-WALL® patent. © 2017, The Neel Company

DATE:	03-23-17
SCALE:	NO SCALE
DESIGNED:	CAA
DRAWN:	CAA
CHECKED:	CCG/KD
TNC JOB #:	TW3634
TNC SHT #:	11 OF 67

SHEET 11 OF 67

87-402 PE

DATE: 03-23-17 TNC JOB #: TW3634 PLOT DATE AND TIME: Wednesday, March 22, 2017 15:45:55 CAD FILE NAME: 011 Typ Dtls 8 Drainage 2 r4-0.wxx

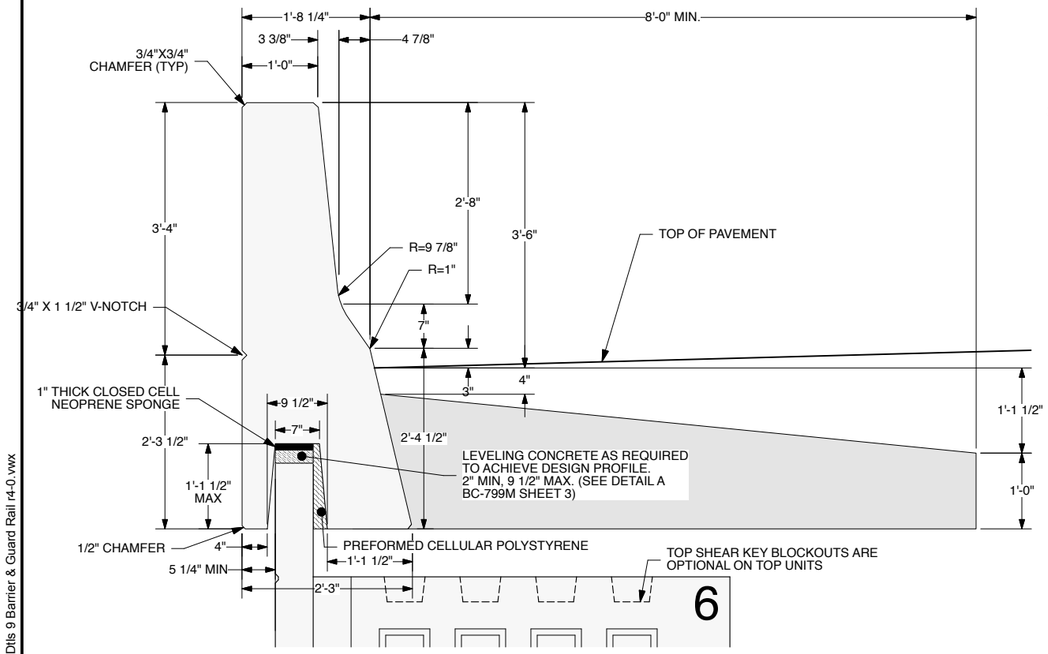

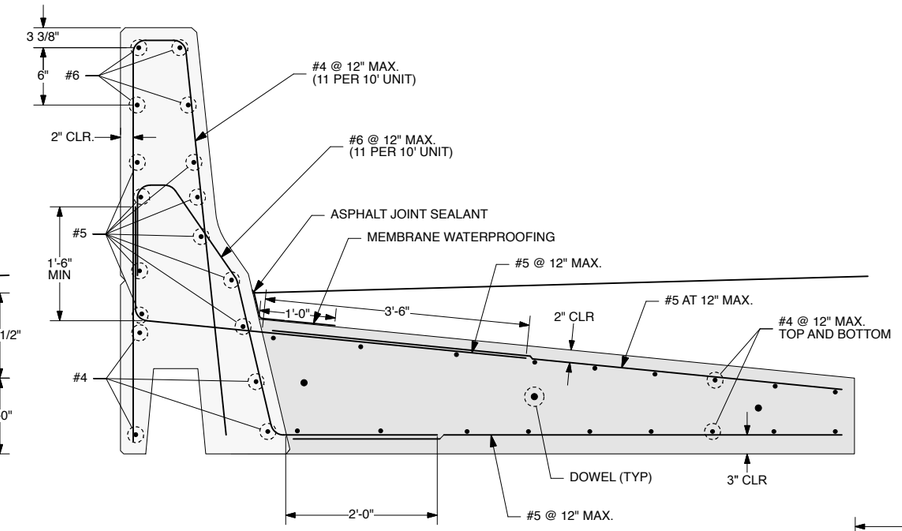

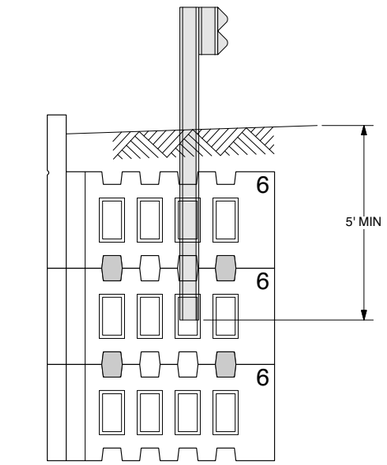

SECTION SHOWING STANDARD GUIDE RAIL

PRECAST BARRIER AND C.I.P. MOMENT SLAB MOUNTED ON T-WALL® RETAINING WALL SYSTEM

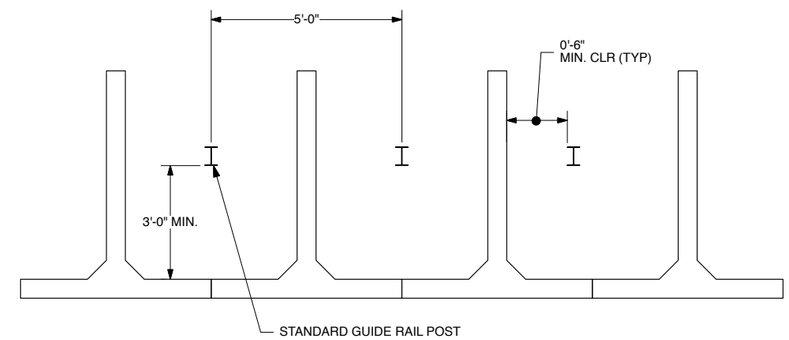

PART PLAN SHOWING STANDARD GUIDE RAIL POST SPACING

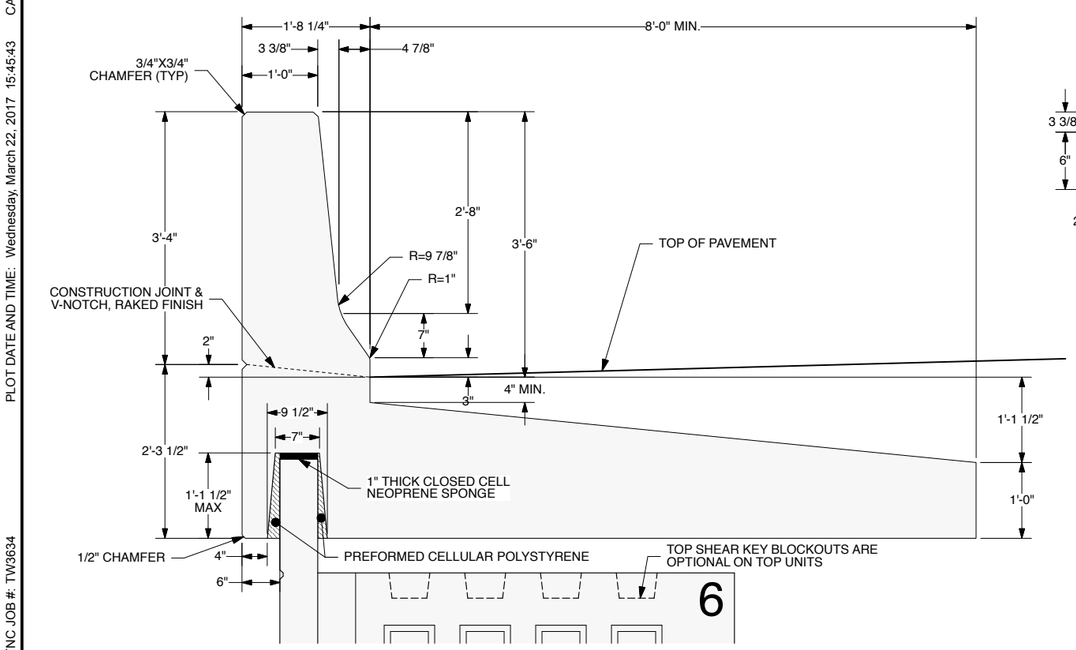

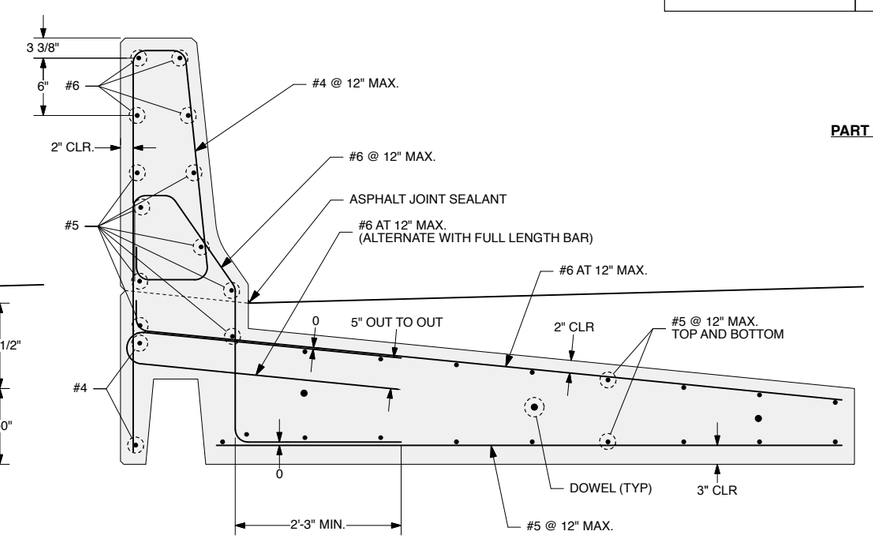

C.I.P. BARRIER AND MOMENT SLAB MOUNTED ON T-WALL® RETAINING WALL SYSTEM

PA DOT DWG # 87-402 PE (REVISION IV) 4/13/2017

COMMONWEALTH OF PENNSYLVANIA
DEPARTMENT OF TRANSPORTATION
BUREAU OF PROJECT DELIVERY

T-WALL® STANDARDS
PREFABRICATED T-WALL® RETAINING WALL SYSTEM

SHOP DRAWINGS
TYPICAL DETAILS
TRAFFIC BARRIER WITH BITUMINOUS CONCRETE SHOULDER

DESIGNER
THE NEEL COMPANY
8328-D TRAFORD LANE
SPRINGFIELD, VA 22152
PH: (703) 913-7858
FX: (703) 913-7859
Web: www.neelco.com

This drawing contains information proprietary to The Neel Company. The Neel Company is the exclusive licensee of the T-WALL® patent. © 2017, The Neel Company

DATE:	03-23-17
SCALE:	NO SCALE
DESIGNED:	CAA
DRAWN:	CAA/ACS
CHECKED:	CCG/KD
TNC JOB #:	TW3634
TNC SHT #:	12 OF 67

SHEET 12 OF 67

87-402 PE

DATE: 03-23-17 TNC JOB #: TW3634 PLOT DATE AND TIME: Wednesday, March 22, 2017 15:45:43 CAD FILE NAME: 012 Typ Dtls 9 Barrier & Guard Rail r4-0.vwx

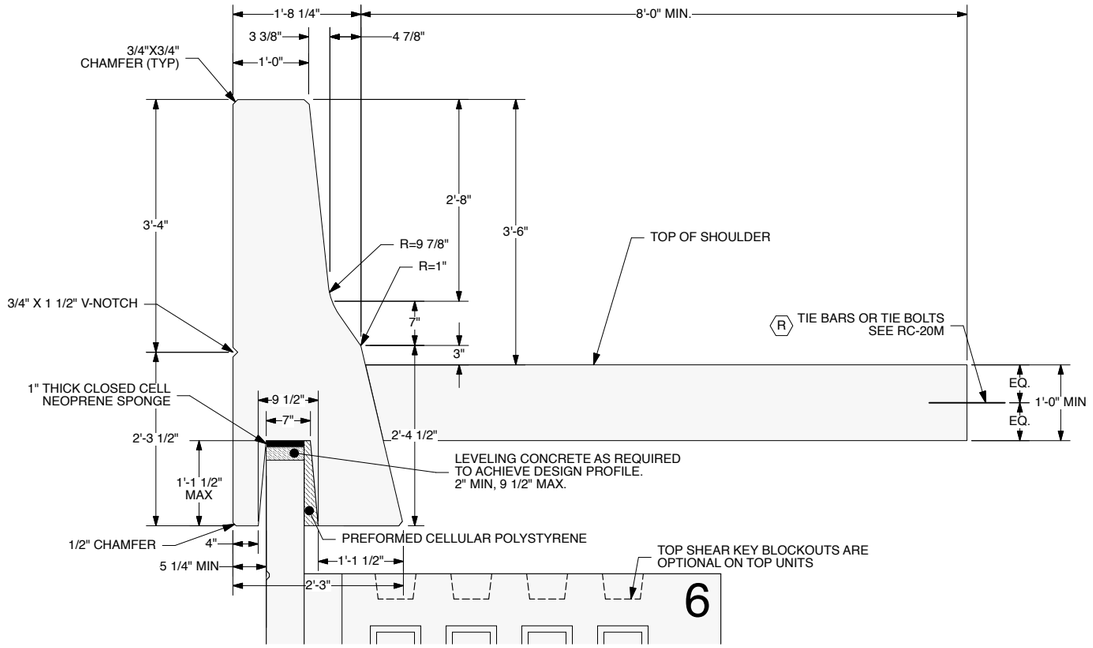

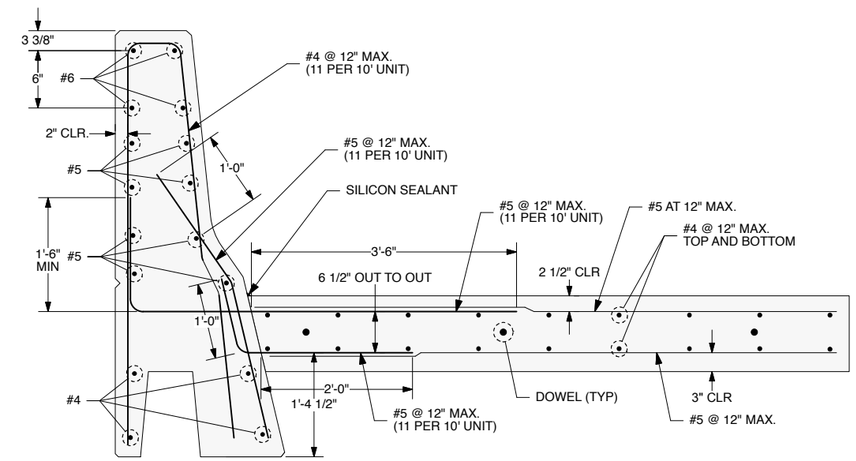

PRECAST BARRIER AND C.I.P. MOMENT SLAB MOUNTED ON T-WALL® RETAINING WALL SYSTEM

LEGEND

(R) ROADWAY ITEM

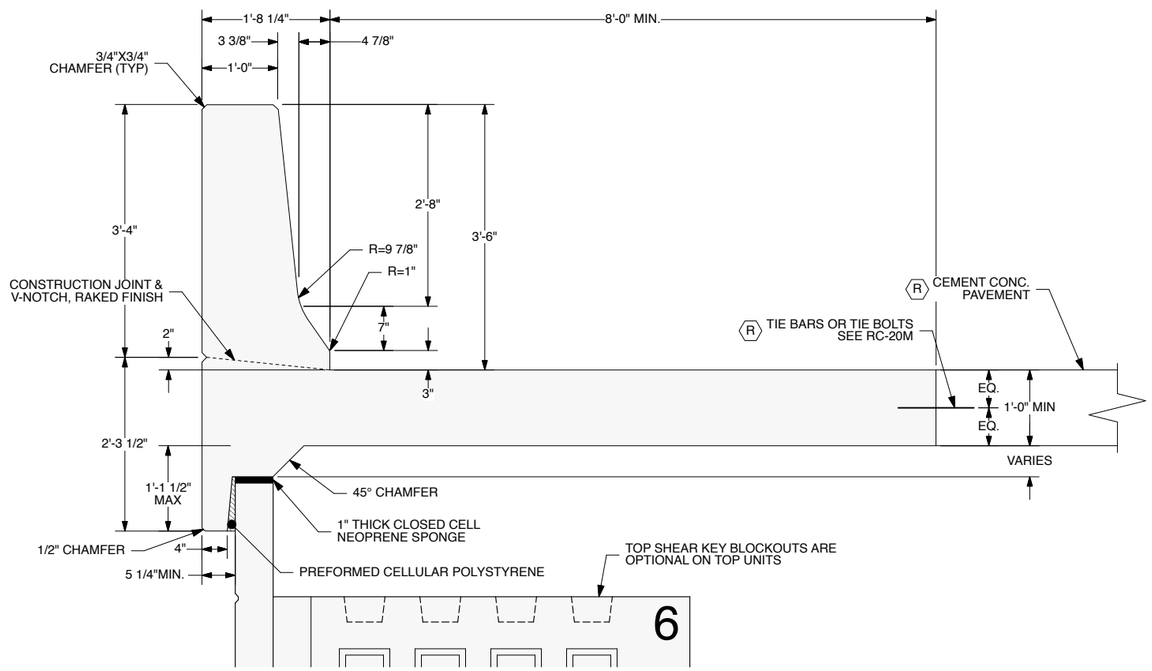

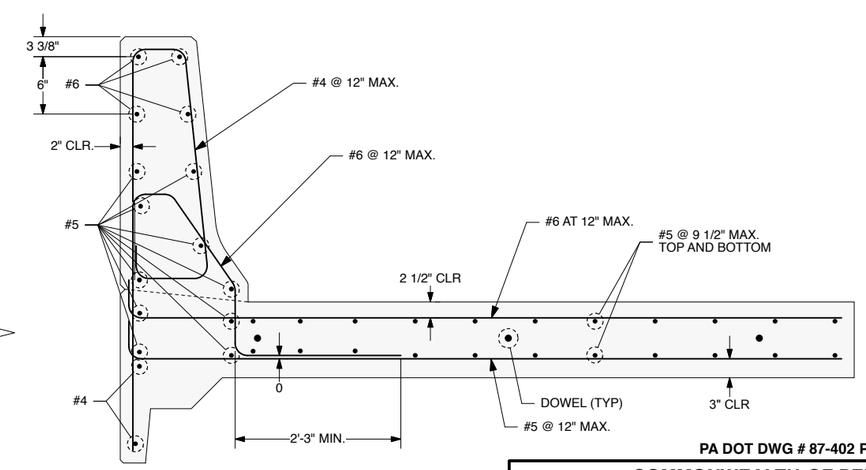

C.I.P. BARRIER AND MOMENT SLAB MOUNTED ON T-WALL® RETAINING WALL SYSTEM

PA DOT DWG # 87-402 PE (REVISION IV)

COMMONWEALTH OF PENNSYLVANIA
DEPARTMENT OF TRANSPORTATION
BUREAU OF PROJECT DELIVERY

T-WALL® STANDARDS
PREFABRICATED T-WALL® RETAINING WALL SYSTEM

SHOP DRAWINGS
TYPICAL DETAILS
TRAFFIC BARRIER WITH CEMENT CONCRETE SHOULDER

4/13/2017

DESIGNER

THE NEEL COMPANY
8328-D TRAFORD LANE
SPRINGFIELD, VA 22152
Ph1: (703) 913-7858
FX: (703) 913-7859
Web: www.neelco.com

This drawing contains information proprietary to The Neel Company. The Neel Company is the exclusive licensee of the T-WALL® patent. © 2017, The Neel Company

DATE:	03-23-17
SCALE:	NO SCALE
DESIGNED:	CAA
DRAWN:	ACS
CHECKED:	CCG/KD
TNC JOB #:	TW3634
TNC SHT #:	13 OF 67

SHEET 13 OF 67

87-402 PE

DATE: 03-23-17 TNC JOB #: TW3634 PLOT DATE AND TIME: Wednesday, March 22, 2017 15:45:43 CAD FILE NAME: 012 Typ Dtls 9 Barrier & Guard Rail r4-0.vwx

REBAR SCHEDULE -	2.5 x 5.0 x 4.0 STANDARD UNIT				STEEL WT= 39.16 lbs	
Unit Dim's	Bar Mark	Qnty	Size	Length	Dim 'A'	Remarks
H = 2'6"	H-1	3 ea	#4	4'8"		
W = 5'0"	V-1	6 ea	#3	2'2"		
S = 4'0"	V-2	6 ea	#3	2'2"		
SH = 2'6"	S-1	4 ea	#3	3'3"		
	TB-1	4 ea	#4	5'8"	3'6 1/2"	

REBAR SCHEDULE -	2.5 x 5.0 x 6.0 STANDARD UNIT				STEEL WT= 47.76 lbs	
Unit Dim's	Bar Mark	Qnty	Size	Length	Dim 'A'	Remarks
H = 2'6"	H-1	3 ea	#4	4'8"		
W = 5'0"	V-1	10 ea	#3	2'2"		
S = 6'0"	V-2	6 ea	#3	2'2"		
SH = 2'6"	S-1	4 ea	#3	3'3"		
	TB-1	4 ea	#4	7'8"	5'6 1/2"	

REBAR SCHEDULE -	2.5 x 5.0 x 8.0 STANDARD UNIT				STEEL WT= 56.36 lbs	
Unit Dim's	Bar Mark	Qnty	Size	Length	Dim 'A'	Remarks
H = 2'6"	H-1	3 ea	#4	4'8"		
W = 5'0"	V-1	14 ea	#3	2'2"		
S = 8'0"	V-2	6 ea	#3	2'2"		
SH = 2'6"	S-1	4 ea	#3	3'3"		
	TB-1	4 ea	#4	9'8"	7'6 1/2"	

REBAR SCHEDULE -	2.5 x 5.0 x 10.0 STANDARD UNIT				STEEL WT= 64.97 lbs	
Unit Dim's	Bar Mark	Qnty	Size	Length	Dim 'A'	Remarks
H = 2'6"	H-1	3 ea	#4	4'8"		
W = 5'0"	V-1	18 ea	#3	2'2"		
S = 10'0"	V-2	6 ea	#3	2'2"		
SH = 2'6"	S-1	4 ea	#3	3'3"		
	TB-1	4 ea	#4	11'8"	9'6 1/2"	

REBAR SCHEDULE -	2.5 x 5.0 x 12.0 STANDARD UNIT				STEEL WT= 73.57 lbs	
Unit Dim's	Bar Mark	Qnty	Size	Length	Dim 'A'	Remarks
H = 2'6"	H-1	3 ea	#4	4'8"		
W = 5'0"	V-1	22 ea	#3	2'2"		
S = 12'0"	V-2	6 ea	#3	2'2"		
SH = 2'6"	S-1	4 ea	#3	3'3"		
	TB-1	4 ea	#4	13'8"	11'6 1/2"	

REBAR SCHEDULE -	2.5 x 5.0 x 14.0 STANDARD UNIT				STEEL WT= 109.47 lbs	
Unit Dim's	Bar Mark	Qnty	Size	Length	Dim 'A'	Remarks
H = 2'6"	H-1	3 ea	#4	4'8"		
W = 5'0"	V-1	26 ea	#3	2'2"		
S = 14'0"	V-2	6 ea	#3	2'2"		
SH = 2'6"	S-1	4 ea	#4	3'3"		
	TB-1	4 ea	#5	15'8"	13'6 1/2"	

REBAR SCHEDULE -	2.5 x 5.0 x 16.0 STANDARD UNIT				STEEL WT= 121.07 lbs	
Unit Dim's	Bar Mark	Qnty	Size	Length	Dim 'A'	Remarks
H = 2'6"	H-1	3 ea	#4	4'8"		
W = 5'0"	V-1	30 ea	#3	2'2"		
S = 16'0"	V-2	6 ea	#3	2'2"		
SH = 2'6"	S-1	4 ea	#4	3'3"		
	TB-1	4 ea	#5	17'8"	15'6 1/2"	

REBAR SCHEDULE -	2.5 x 5.0 x 18.0 STANDARD UNIT				STEEL WT= 132.67 lbs	
Unit Dim's	Bar Mark	Qnty	Size	Length	Dim 'A'	Remarks
H = 2'6"	H-1	3 ea	#4	4'8"		
W = 5'0"	V-1	34 ea	#3	2'2"		
S = 18'0"	V-2	6 ea	#3	2'2"		
SH = 2'6"	S-1	4 ea	#4	3'3"		
	TB-1	4 ea	#5	19'8"	17'6 1/2"	

REBAR SCHEDULE -	2.5 x 5.0 x 20.0 STANDARD UNIT				STEEL WT= 144.27 lbs	
Unit Dim's	Bar Mark	Qnty	Size	Length	Dim 'A'	Remarks
H = 2'6"	H-1	3 ea	#4	4'8"		
W = 5'0"	V-1	38 ea	#3	2'2"		
S = 20'0"	V-2	6 ea	#3	2'2"		
SH = 2'6"	S-1	4 ea	#4	3'3"		
	TB-1	4 ea	#5	21'8"	19'6 1/2"	

REBAR SCHEDULE -	2.5 x 5.0 x 22.0 STANDARD UNIT				STEEL WT= 155.88 lbs	
Unit Dim's	Bar Mark	Qnty	Size	Length	Dim 'A'	Remarks
H = 2'6"	H-1	3 ea	#4	4'8"		
W = 5'0"	V-1	42 ea	#3	2'2"		
S = 22'0"	V-2	6 ea	#3	2'2"		
SH = 2'6"	S-1	4 ea	#4	3'3"		
	TB-1	4 ea	#5	23'8"	21'6 1/2"	

REBAR SCHEDULE -	2.5 x 5.0 x 24.0 STANDARD UNIT				STEEL WT= 167.48 lbs	
Unit Dim's	Bar Mark	Qnty	Size	Length	Dim 'A'	Remarks
H = 2'6"	H-1	3 ea	#4	4'8"		
W = 5'0"	V-1	46 ea	#3	2'2"		
S = 24'0"	V-2	6 ea	#3	2'2"		
SH = 2'6"	S-1	4 ea	#4	3'3"		
	TB-1	4 ea	#5	25'8"	23'6 1/2"	

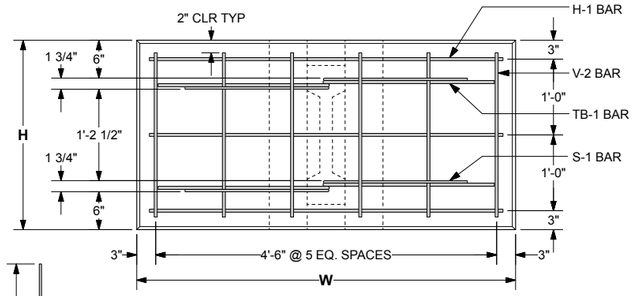

FRONT VIEW
(V-1 BARS IN STEM OMITTED FOR CLARITY)

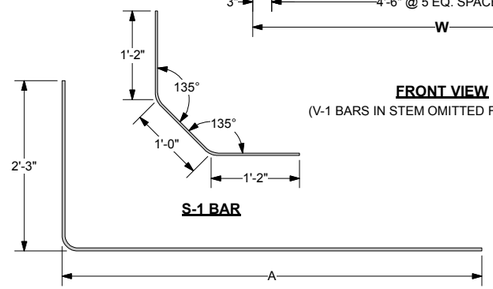

S-1 BAR

TB-1 BAR
6' STEM REBAR SHOWN

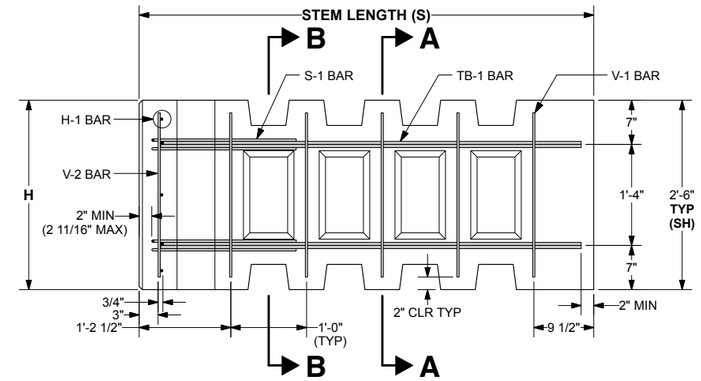

SIDE VIEW
6' STEM SHOWN

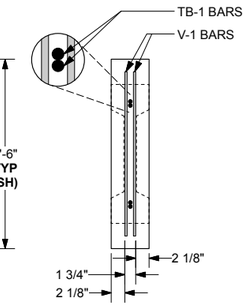

SECTION A-A

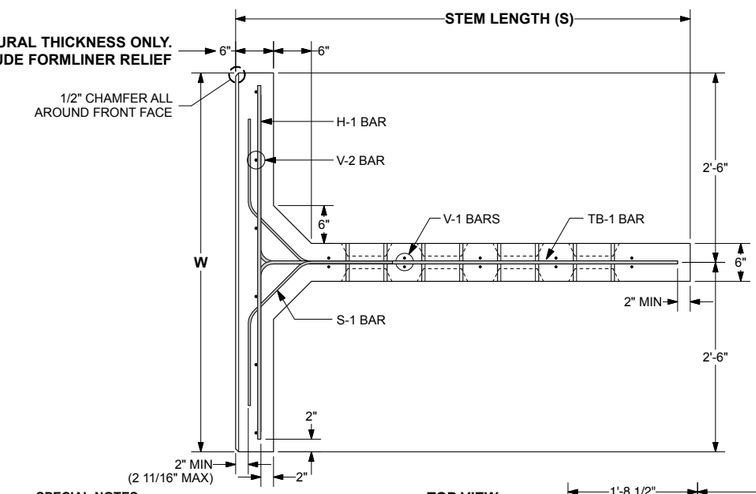

TOP VIEW
6' STEM SHOWN

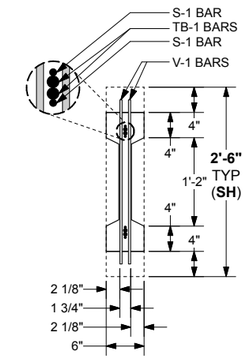

SECTION B-B

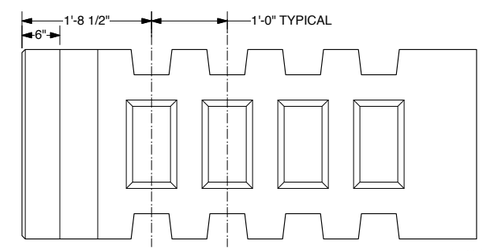

UNIT TYPE	HEIGHT (H)	WIDTH (W)	STEM LENGTH (S)	SH	VOL*	WEIGHT*
2.5 x 5.0 x 4.0 STD	2'6"	5'0"	4'0"	2'6"	0.39 cy	1,574 lbs
2.5 x 5.0 x 6.0 STD	2'6"	5'0"	6'0"	2'6"	0.45 cy	1,836 lbs
2.5 x 5.0 x 8.0 STD	2'6"	5'0"	8'0"	2'6"	0.52 cy	2,098 lbs
2.5 x 5.0 x 10.0 STD	2'6"	5'0"	10'0"	2'6"	0.58 cy	2,360 lbs
2.5 x 5.0 x 12.0 STD	2'6"	5'0"	12'0"	2'6"	0.65 cy	2,622 lbs
2.5 x 5.0 x 14.0 STD	2'6"	5'0"	14'0"	2'6"	0.71 cy	2,883 lbs
2.5 x 5.0 x 16.0 STD	2'6"	5'0"	16'0"	2'6"	0.78 cy	3,145 lbs
2.5 x 5.0 x 18.0 STD	2'6"	5'0"	18'0"	2'6"	0.84 cy	3,407 lbs
2.5 x 5.0 x 20.0 STD	2'6"	5'0"	20'0"	2'6"	0.91 cy	3,669 lbs
2.5 x 5.0 x 22.0 STD	2'6"	5'0"	22'0"	2'6"	0.97 cy	3,931 lbs
2.5 x 5.0 x 24.0 STD	2'6"	5'0"	24'0"	2'6"	1.04 cy	4,193 lbs
2.5 x 5.0 x 26.0 STD	2'6"	5'0"	26'0"	2'6"	1.10 cy	4,454 lbs
2.5 x 5.0 x 28.0 STD	2'6"	5'0"	28'0"	2'6"	1.16 cy	4,716 lbs
2.5 x 5.0 x 30.0 STD	2'6"	5'0"	30'0"	2'6"	1.23 cy	4,978 lbs
2.5 x 5.0 x 32.0 STD	2'6"	5'0"	32'0"	2'6"	1.29 cy	5,240 lbs

*UNIT VOLUME AND WEIGHT BASED ON 6" THICK FRONT FACE. ARCHITECTURAL FINISHES WILL INCREASE FACE THICKNESS, VOLUME AND WEIGHT.

REBAR SCHEDULE -	2.5 x 5.0 x 26.0 STANDARD UNIT				STEEL WT= 184.33 lbs	
Unit Dim's	Bar Mark	Qnty	Size	Length	Dim 'A'	Remarks
H = 2'6"	H-1	3 ea	#5	4'8"		
W = 5'0"	V-1	50 ea	#3	2'2"		
S = 26'0"	V-2	6 ea	#3	2'2"		
SH = 2'6"	S-1	4 ea	#4	3'3"		
	TB-1	4 ea	#5	27'8"	25'6 1/2"	

REBAR SCHEDULE -	2.5 x 5.0 x 28.0 STANDARD UNIT				STEEL WT= 195.94 lbs	
Unit Dim's	Bar Mark	Qnty	Size	Length	Dim 'A'	Remarks
H = 2'6"	H-1	3 ea	#5	4'8"		
W = 5'0"	V-1	54 ea	#3	2'2"		
S = 28'0"	V-2	6 ea	#3	2'2"		
SH = 2'6"	S-1	4 ea	#4	3'3"		
	TB-1	4 ea	#5	29'8"	27'6 1/2"	

REBAR SCHEDULE -	2.5 x 5.0 x 30.0 STANDARD UNIT				STEEL WT= 207.54 lbs	
Unit Dim's	Bar Mark	Qnty	Size	Length	Dim 'A'	Remarks
H = 2'6"	H-1	3 ea	#5	4'8"		
W = 5'0"	V-1	58 ea	#3	2'2"		
S = 30'0"	V-2	6 ea	#3	2'2"		
SH = 2'6"	S-1	4 ea	#4	3'3"		
	TB-1	4 ea	#5	31'8"	29'6 1/2"	

REBAR SCHEDULE -	2.5 x 5.0 x 32.0 STANDARD UNIT				STEEL WT= 219.14 lbs	
Unit Dim's	Bar Mark	Qnty	Size	Length	Dim 'A'	Remarks
H = 2'6"	H-1	3 ea	#5	4'8"		
W = 5'0"	V-1	62 ea	#3	2'2"		
S = 32'0"	V-2	6 ea	#3	2'2"		
SH = 2'6"	S-1	4 ea	#4	3'3"		
	TB-1	4 ea	#5	33'8"	31'6 1/2"	

SPECIAL NOTES:

1. FRONT FACE OF T-WALL UNITS FINISH TREATMENT:
   - PER CONTRACT DRAWINGS AND SPECS.
2. TOP & BOTTOM SHEAR KEY BLOCKOUTS MAY BE LEFT OUT IN AN ALTERNATING PATTERN WHEN STEM LENGTHS BECOME LONGER THAN 10 FT (SPACED AT 2'0"). ALL BLOCKOUTS ARE REQUIRED IN THE STEM FOR THE FIRST 10FT OF LENGTH. REGARDLESS OF OVERALL LENGTH.

GENERAL NOTES:

1. PRIMARY REFERENCE: AASHTO LRFD BRIDGE SPECIFICATIONS, 3rd EDITION, 2006 WITH INTERIM REVISIONS
2. MINIMUM CONCRETE COVER IS DESIGNED FOR 2" ON ALL BARS. TOLERANCES PER CONSTRUCTION SPECIFICATIONS SECTION 2.0 ON SHEET 2 OF 15.
3. ALL MATERIAL AND TOLERANCES IN ACCORDS TO T-WALL CONSTRUCTION SPECIFICATIONS, SECTION 2.0 MATERIALS.
4. REBAR:
   - SEE CONSTRUCTION SPECIFICATION, SECTION 2.0 MATERIALS OR PER CONTRACT DRAWINGS AND SPECS.
5. CONCRETE:
   - STEM LENGTHS LESS THAN 24', USE F'c = 4000 psi @ 28 DAYS
   - STEM LENGTHS MORE THAN 24', USE F'c = 5000 psi @ 28 DAYS

PA DOT DWG # 87-402 PE (REVISION IV) 4/13/2017

COMMONWEALTH OF PENNSYLVANIA
DEPARTMENT OF TRANSPORTATION
BUREAU OF PROJECT DELIVERY

T-WALL® STANDARDS
PREFABRICATED T-WALL® RETAINING WALL SYSTEM

SHOP DRAWINGS
REBAR
STANDARD UNITS

DESIGNER
THE NEEL COMPANY
8328-D TRAFORD LANE
SPRINGFIELD, VA 22152
PH: (703) 913-7858
FX: (703) 913-7859
Web: www.neelco.com

This drawing contains information proprietary to The Neel Company. The Neel Company is the exclusive licensee of the T-WALL® patent. © 2017 , The Neel Company

DATE:	03-23-17
SCALE:	NO SCALE
DESIGNED:	CAA
DRAWN:	CAA
CHECKED:	CCG/KD
TNC JOB #:	TW3634
TNC SHT #:	14 OF 67

DATE: 03-23-17 TNC JOB #: TW3634 PLOT DATE AND TIME: Wednesday, March 22, 2017 15:47:55 CAD FILE NAME: 014 Rebar - HWY Std r4-0.wxx

REBAR SCHEDULE -	3.0 x 5.0 x 4.0 STANDARD TOP UNIT			STEEL WT=	54.07 lbs	
Unit Dim's	Bar Mark	Qnty	Size	Length	Dim 'A'	Remarks
H = 3'0"	H-1	4 ea	#4	4'8"		
W = 5'0"	V-1	6 ea	#3	2'2"		
S = 4'0"	V-2	6 ea	#5	2'8"		
SH = 2'6"	S-1	4 ea	#3	3'3"		
	TB-1	4 ea	#4	5'8"	3'6 1/2"	

REBAR SCHEDULE -	3.0 x 5.0 x 6.0 STANDARD TOP UNIT			STEEL WT=	62.68 lbs	
Unit Dim's	Bar Mark	Qnty	Size	Length	Dim 'A'	Remarks
H = 3'0"	H-1	4 ea	#4	4'8"		
W = 5'0"	V-1	10 ea	#3	2'2"		
S = 6'0"	V-2	6 ea	#5	2'8"		
SH = 2'6"	S-1	4 ea	#3	3'3"		
	TB-1	4 ea	#4	7'8"	5'6 1/2"	

REBAR SCHEDULE -	3.0 x 5.0 x 8.0 STANDARD TOP UNIT			STEEL WT=	71.28 lbs	
Unit Dim's	Bar Mark	Qnty	Size	Length	Dim 'A'	Remarks
H = 3'0"	H-1	4 ea	#4	4'8"		
W = 5'0"	V-1	14 ea	#3	2'2"		
S = 8'0"	V-2	6 ea	#5	2'8"		
SH = 2'6"	S-1	4 ea	#3	3'3"		
	TB-1	4 ea	#4	9'8"	7'6 1/2"	

REBAR SCHEDULE -	3.0 x 5.0 x 10.0 STANDARD TOP UNIT			STEEL WT=	79.88 lbs	
Unit Dim's	Bar Mark	Qnty	Size	Length	Dim 'A'	Remarks
H = 3'0"	H-1	4 ea	#4	4'8"		
W = 5'0"	V-1	18 ea	#3	2'2"		
S = 10'0"	V-2	6 ea	#5	2'8"		
SH = 2'6"	S-1	4 ea	#3	3'3"		
	TB-1	4 ea	#4	11'8"	9'6 1/2"	

REBAR SCHEDULE -	3.5 x 5.0 x 4.0 STANDARD TOP UNIT			STEEL WT=	57.20 lbs	
Unit Dim's	Bar Mark	Qnty	Size	Length	Dim 'A'	Remarks
H = 3'6"	H-1	4 ea	#4	4'8"		
W = 5'0"	V-1	6 ea	#3	2'2"		
S = 4'0"	V-2	6 ea	#5	3'2"		
SH = 2'6"	S-1	4 ea	#3	3'3"		
	TB-1	4 ea	#4	5'8"	3'6 1/2"	

REBAR SCHEDULE -	3.5 x 5.0 x 6.0 STANDARD TOP UNIT			STEEL WT=	65.81 lbs	
Unit Dim's	Bar Mark	Qnty	Size	Length	Dim 'A'	Remarks
H = 3'6"	H-1	4 ea	#4	4'8"		
W = 5'0"	V-1	10 ea	#3	2'2"		
S = 6'0"	V-2	6 ea	#5	3'2"		
SH = 2'6"	S-1	4 ea	#3	3'3"		
	TB-1	4 ea	#4	7'8"	5'6 1/2"	

REBAR SCHEDULE -	3.5 x 5.0 x 8.0 STANDARD TOP UNIT			STEEL WT=	74.41 lbs	
Unit Dim's	Bar Mark	Qnty	Size	Length	Dim 'A'	Remarks
H = 3'6"	H-1	4 ea	#4	4'8"		
W = 5'0"	V-1	14 ea	#3	2'2"		
S = 8'0"	V-2	6 ea	#5	3'2"		
SH = 2'6"	S-1	4 ea	#3	3'3"		
	TB-1	4 ea	#4	9'8"	7'6 1/2"	

REBAR SCHEDULE -	3.5 x 5.0 x 10.0 STANDARD TOP UNIT			STEEL WT=	83.01 lbs	
Unit Dim's	Bar Mark	Qnty	Size	Length	Dim 'A'	Remarks
H = 3'6"	H-1	4 ea	#4	4'8"		
W = 5'0"	V-1	18 ea	#3	2'2"		
S = 10'0"	V-2	6 ea	#5	3'2"		
SH = 2'6"	S-1	4 ea	#3	3'3"		
	TB-1	4 ea	#4	11'8"	9'6 1/2"	

UNIT TYPE	HEIGHT (H)	WIDTH (W)	STEM LENGTH (S)	(SH)	VOL	WEIGHT
3.0 x 5.0 x 4.0 TOP	3'0"	5'0"	4'0"	2'6"	0.44 cy	1,762 lbs
3.0 x 5.0 x 6.0 TOP	3'0"	5'0"	6'0"	2'6"	0.50 cy	2,024 lbs
3.0 x 5.0 x 8.0 TOP	3'0"	5'0"	8'0"	2'6"	0.56 cy	2,285 lbs
3.0 x 5.0 x 10.0 TOP	3'0"	5'0"	10'0"	2'6"	0.63 cy	2,547 lbs
3.5 x 5.0 x 4.0 TOP	3'6"	5'0"	4'0"	2'6"	0.48 cy	1,949 lbs
3.5 x 5.0 x 6.0 TOP	3'6"	5'0"	6'0"	2'6"	0.55 cy	2,211 lbs
3.5 x 5.0 x 8.0 TOP	3'6"	5'0"	8'0"	2'6"	0.61 cy	2,473 lbs
3.5 x 5.0 x 10.0 TOP	3'6"	5'0"	10'0"	2'6"	0.68 cy	2,735 lbs
4.0 x 5.0 x 4.0 TOP	4'0"	5'0"	4'0"	2'6"	0.53 cy	2,137 lbs
4.0 x 5.0 x 6.0 TOP	4'0"	5'0"	6'0"	2'6"	0.59 cy	2,399 lbs
4.0 x 5.0 x 8.0 TOP	4'0"	5'0"	8'0"	2'6"	0.66 cy	2,660 lbs
4.0 x 5.0 x 10.0 TOP	4'0"	5'0"	10'0"	2'6"	0.72 cy	2,922 lbs
4.5 x 5.0 x 6.0 TOP	4'6"	5'0"	6'0"	2'6"	0.64 cy	2,586 lbs
4.5 x 5.0 x 8.0 TOP	4'6"	5'0"	8'0"	2'6"	0.70 cy	2,848 lbs
4.5 x 5.0 x 10.0 TOP	4'6"	5'0"	10'0"	2'6"	0.77 cy	3,110 lbs
5.0 x 5.0 x 6.0 TOP	5'0 1/2"	5'0"	6'0"	2'6"	0.69 cy	2,789 lbs
5.0 x 5.0 x 8.0 TOP	5'0 1/2"	5'0"	8'0"	2'6"	0.75 cy	3,051 lbs
5.0 x 5.0 x 10.0 TOP	5'0 1/2"	5'0"	10'0"	2'6"	0.82 cy	3,313 lbs
5.5 x 5.0 x 6.0 TOP	5'6"	5'0"	6'0"	2'6"	0.73 cy	2,961 lbs
5.5 x 5.0 x 8.0 TOP	5'6"	5'0"	8'0"	2'6"	0.80 cy	3,223 lbs
5.5 x 5.0 x 10.0 TOP	5'6"	5'0"	10'0"	2'6"	0.86 cy	3,485 lbs
6.0 x 5.0 x 6.0 TOP	6'0"	5'0"	6'0"	2'6"	0.78 cy	3,149 lbs
6.0 x 5.0 x 8.0 TOP	6'0"	5'0"	8'0"	2'6"	0.84 cy	3,410 lbs
6.0 x 5.0 x 10.0 TOP	6'0"	5'0"	10'0"	2'6"	0.91 cy	3,672 lbs

*UNIT VOLUME AND WEIGHT BASED ON 6" THICK FRONT FACE. ARCHITECTURAL FINISHES WILL INCREASE FACE THICKNESS, VOLUME AND WEIGHT.

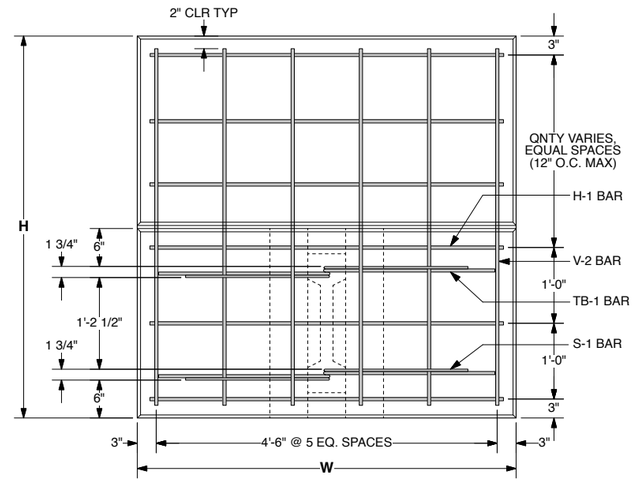

FRONT VIEW
(V-1 BARS IN STEM OMITTED FOR CLARITY)

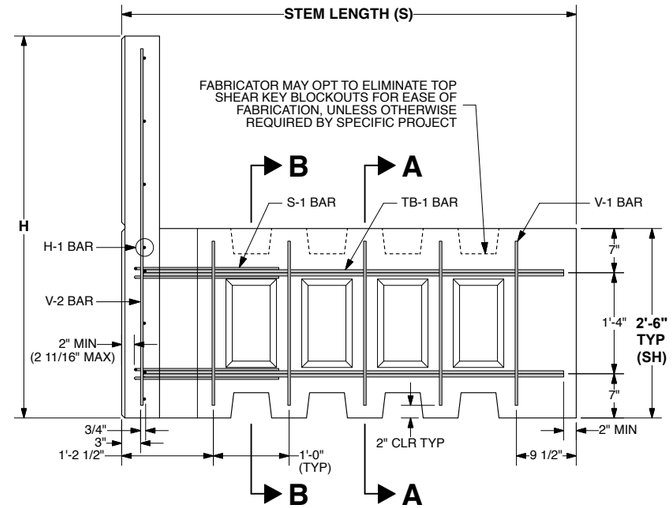

SIDE VIEW
6' STEM SHOWN

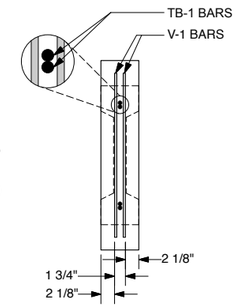

SECTION A-A

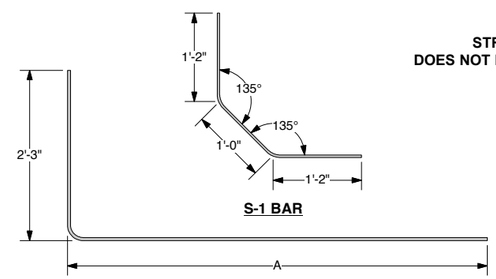

S-1 BAR

TB-1 BAR
6' STEM REBAR SHOWN

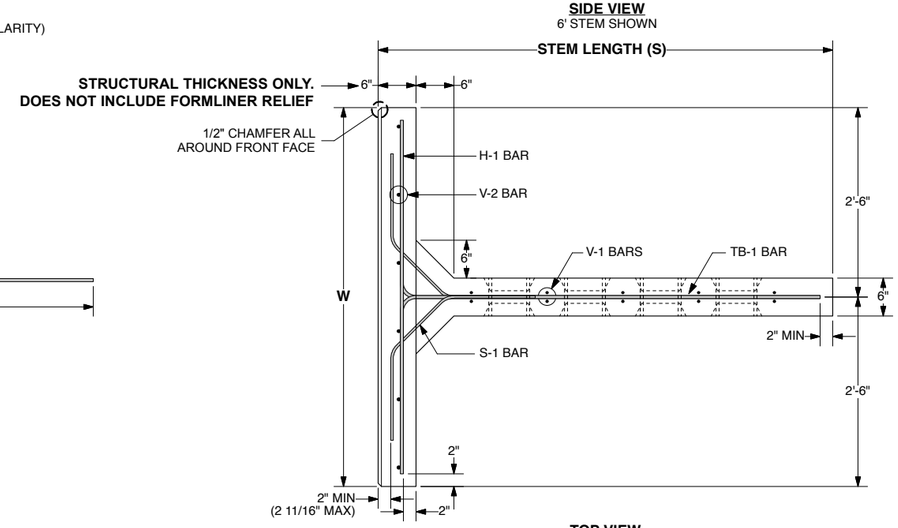

TOP VIEW
6' STEM SHOWN

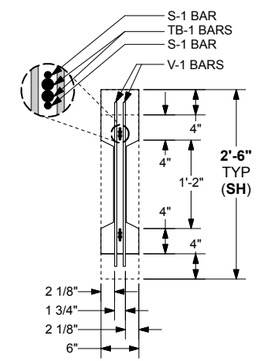

SECTION B-B

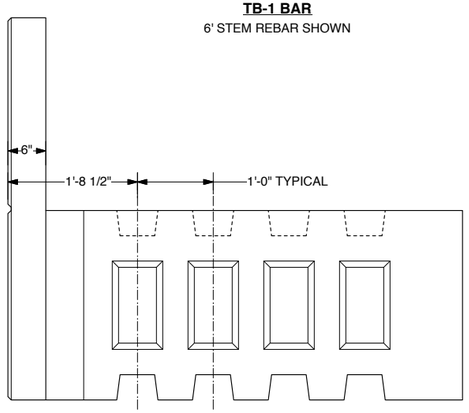

SPECIAL NOTES:

1. FRONT FACE OF T-WALL UNITS FINISH TREATMENT:
   - PER CONTRACT DRAWINGS AND SPECS.
2. TOP & BOTTOM SHEAR KEY BLOCKOUTS MAY BE LEFT OUT IN AN ALTERNATING PATTERN WHEN STEM LENGTHS BECOME LONGER THAN 10 FT (SPACED AT 2'0"). ALL BLOCKOUTS ARE REQUIRED IN THE STEM FOR THE FIRST 10FT OF LENGTH. REGARDLESS OF OVERALL LENGTH.

GENERAL NOTES:

1. PRIMARY REFERENCE: AASHTO LRFD BRIDGE SPECIFICATIONS, 3rd EDITION, 2006 WITH INTERIM REVISIONS
2. MINIMUM CONCRETE COVER IS DESIGNED FOR 2" ON ALL BARS. TOLERANCES PER CONSTRUCTION SPECIFICATIONS SECTION 2.0 ON SHEET 2 OF 15.
3. ALL MATERIAL AND TOLERANCES IN ACCORDS TO T-WALL CONSTRUCTION SPECIFICATIONS, SECTION 2.0 MATERIALS.
4. REBAR:
   - SEE CONSTRUCTION SPECIFICATION, SECTION 2.0 MATERIALS OR PER CONTRACT DRAWINGS AND SPECS.
5. CONCRETE:
   - F'c = 4000 psi @ 28 DAYS

4/13/2017

DESIGNER

THE NEEL COMPANY
8328-D TRAFORD LANE
SPRINGFIELD, VA 22152
PH: (703) 913-7858
FX: (703) 913-7859
Web: www.neelco.com

This drawing contains information proprietary to The Neel Company. The Neel Company is the exclusive licensee of the T-WALL® patent. © 2017, The Neel Company

DATE:	03-23-17
SCALE:	NO SCALE
DESIGNED:	CAA
DRAWN:	CAA/ACS
CHECKED:	CCG/KD
TNC JOB #:	TW3634
TNC SHT #:	15 OF 67

PA DOT DWG # 87-402 PE (REVISION IV)

COMMONWEALTH OF PENNSYLVANIA
DEPARTMENT OF TRANSPORTATION
BUREAU OF PROJECT DELIVERY

T-WALL® STANDARDS
PREFABRICATED T-WALL® RETAINING WALL SYSTEM

SHOP DRAWINGS
REBAR
STANDARD TOP UNITS (I)

SHEET 15 OF 67

87-402 PE

DATE: 03-23-17 TNC JOB #: TW3634 PLOT DATE AND TIME: Wednesday, March 22, 2017 15:47:43 CAD FILE NAME: 015 Rebar - HWY Std Top r4-0.vwx

REBAR SCHEDULE - 4.0 x 5.0 x 4.0 STANDARD TOP UNIT STEEL WT= 63.45 lbs

Unit Dim's	Bar Mark	Qnty	Size	Length	Dim 'A'	Remarks
H = 4'0"	H-1	5 ea	#4	4'8"		
W = 5'0"	V-1	6 ea	#3	2'2"		
S = 4'0"	V-2	6 ea	#5	3'8"		
SH = 2'6"	S-1	4 ea	#3	3'3"		
	TB-1	4 ea	#4	5'8"	3'6 1/2"	

REBAR SCHEDULE - 4.0 x 5.0 x 6.0 STANDARD TOP UNIT STEEL WT= 72.05 lbs

Unit Dim's	Bar Mark	Qnty	Size	Length	Dim 'A'	Remarks
H = 4'0"	H-1	5 ea	#4	4'8"		
W = 5'0"	V-1	10 ea	#3	2'2"		
S = 6'0"	V-2	6 ea	#5	3'8"		
SH = 2'6"	S-1	4 ea	#3	3'3"		
	TB-1	4 ea	#4	7'8"	5'6 1/2"	

REBAR SCHEDULE - 4.0 x 5.0 x 8.0 STANDARD TOP UNIT STEEL WT= 80.66 lbs

Unit Dim's	Bar Mark	Qnty	Size	Length	Dim 'A'	Remarks
H = 4'0"	H-1	5 ea	#4	4'8"		
W = 5'0"	V-1	14 ea	#3	2'2"		
S = 8'0"	V-2	6 ea	#5	3'8"		
SH = 2'6"	S-1	4 ea	#3	3'3"		
	TB-1	4 ea	#4	9'8"	7'6 1/2"	

REBAR SCHEDULE - 4.0 x 5.0 x 10.0 STANDARD TOP UNIT STEEL WT= 89.26 lbs

Unit Dim's	Bar Mark	Qnty	Size	Length	Dim 'A'	Remarks
H = 4'0"	H-1	5 ea	#4	4'8"		
W = 5'0"	V-1	18 ea	#3	2'2"		
S = 10'0"	V-2	6 ea	#5	3'8"		
SH = 2'6"	S-1	4 ea	#3	3'3"		
	TB-1	4 ea	#4	11'8"	9'6 1/2"	

REBAR SCHEDULE - 4.5 x 5.0 x 6.0 STANDARD TOP UNIT STEEL WT= 75.18 lbs

Unit Dim's	Bar Mark	Qnty	Size	Length	Dim 'A'	Remarks
H = 4'6"	H-1	5 ea	#4	4'8"		
W = 5'0"	V-1	10 ea	#3	2'2"		
S = 6'0"	V-2	6 ea	#5	4'2"		
SH = 2'6"	S-1	4 ea	#3	3'3"		
	TB-1	4 ea	#4	7'8"	5'6 1/2"	

REBAR SCHEDULE - 4.5 x 5.0 x 8.0 STANDARD TOP UNIT STEEL WT= 83.78 lbs

Unit Dim's	Bar Mark	Qnty	Size	Length	Dim 'A'	Remarks
H = 4'6"	H-1	5 ea	#4	4'8"		
W = 5'0"	V-1	14 ea	#3	2'2"		
S = 8'0"	V-2	6 ea	#5	4'2"		
SH = 2'6"	S-1	4 ea	#3	3'3"		
	TB-1	4 ea	#4	9'8"	7'6 1/2"	

REBAR SCHEDULE - 4.5 x 5.0 x 10.0 STANDARD TOP UNIT STEEL WT= 92.39 lbs

Unit Dim's	Bar Mark	Qnty	Size	Length	Dim 'A'	Remarks
H = 4'6"	H-1	5 ea	#4	4'8"		
W = 5'0"	V-1	18 ea	#3	2'2"		
S = 10'0"	V-2	6 ea	#5	4'2"		
SH = 2'6"	S-1	4 ea	#3	3'3"		
	TB-1	4 ea	#4	11'8"	9'6 1/2"	

REBAR SCHEDULE - 5.0 x 5.0 x 6.0 STANDARD TOP UNIT STEEL WT= 81.69 lbs

Unit Dim's	Bar Mark	Qnty	Size	Length	Dim 'A'	Remarks
H = 5'0 1/2"	H-1	6 ea	#4	4'8"		
W = 5'0"	V-1	10 ea	#3	2'2"		
S = 6'0"	V-2	6 ea	#5	4'8 1/2"		
SH = 2'6"	S-1	4 ea	#3	3'3"		
	TB-1	4 ea	#4	7'8"	5'6 1/2"	

REBAR SCHEDULE - 5.0 x 5.0 x 8.0 STANDARD TOP UNIT STEEL WT= 90.29 lbs

Unit Dim's	Bar Mark	Qnty	Size	Length	Dim 'A'	Remarks
H = 5'0 1/2"	H-1	6 ea	#4	4'8"		
W = 5'0"	V-1	14 ea	#3	2'2"		
S = 8'0"	V-2	6 ea	#5	4'8 1/2"		
SH = 2'6"	S-1	4 ea	#3	3'3"		
	TB-1	4 ea	#4	9'8"	7'6 1/2"	

REBAR SCHEDULE - 5.0 x 5.0 x 10.0 STANDARD TOP UNIT STEEL WT= 98.89 lbs

Unit Dim's	Bar Mark	Qnty	Size	Length	Dim 'A'	Remarks
H = 5'0 1/2"	H-1	6 ea	#4	4'8"		
W = 5'0"	V-1	18 ea	#3	2'2"		
S = 10'0"	V-2	6 ea	#5	4'8 1/2"		
SH = 2'6"	S-1	4 ea	#3	3'3"		
	TB-1	4 ea	#4	11'8"	9'6 1/2"	

REBAR SCHEDULE - 5.5 x 5.0 x 6.0 STANDARD TOP UNIT STEEL WT= 99.17 lbs

Unit Dim's	Bar Mark	Qnty	Size	Length	Dim 'A'	Remarks
H = 5'6"	H-1	7 ea	#4	4'8"		
W = 5'0"	V-1	10 ea	#3	2'2"		
S = 6'0"	V-2	6 ea	#5	5'2"		#7 BAR IF BARRIER ON TOP OF WALL
SH = 2'6"	S-1	4 ea	#3	3'3"		
	TB-1	4 ea	#5	7'8"	5'6 1/2"	

REBAR SCHEDULE - 5.5 x 5.0 x 8.0 STANDARD TOP UNIT STEEL WT= 110.78 lbs

Unit Dim's	Bar Mark	Qnty	Size	Length	Dim 'A'	Remarks
H = 5'6"	H-1	7 ea	#4	4'8"		
W = 5'0"	V-1	14 ea	#3	2'2"		
S = 8'0"	V-2	6 ea	#5	5'2"		#7 BAR IF BARRIER ON TOP OF WALL
SH = 2'6"	S-1	4 ea	#3	3'3"		
	TB-1	4 ea	#5	9'8"	7'6 1/2"	

REBAR SCHEDULE - 5.5 x 5.0 x 10.0 STANDARD TOP UNIT STEEL WT= 122.38 lbs

Unit Dim's	Bar Mark	Qnty	Size	Length	Dim 'A'	Remarks
H = 5'6"	H-1	7 ea	#4	4'8"		
W = 5'0"	V-1	18 ea	#3	2'2"		
S = 10'0"	V-2	6 ea	#5	5'2"		#7 BAR IF BARRIER ON TOP OF WALL
SH = 2'6"	S-1	4 ea	#3	3'3"		
	TB-1	4 ea	#5	11'8"	9'6 1/2"	

REBAR SCHEDULE - 6.0 x 5.0 x 6.0 STANDARD TOP UNIT STEEL WT= 102.30 lbs

Unit Dim's	Bar Mark	Qnty	Size	Length	Dim 'A'	Remarks
H = 6'0"	H-1	7 ea	#4	4'8"		
W = 5'0"	V-1	10 ea	#3	2'2"		
S = 6'0"	V-2	6 ea	#5	5'8"		#7 BAR IF BARRIER ON TOP OF WALL
SH = 2'6"	S-1	4 ea	#3	3'3"		
	TB-1	4 ea	#5	7'8"	5'6 1/2"	

REBAR SCHEDULE - 6.0 x 5.0 x 8.0 STANDARD TOP UNIT STEEL WT= 113.91 lbs

Unit Dim's	Bar Mark	Qnty	Size	Length	Dim 'A'	Remarks
H = 6'0"	H-1	7 ea	#4	4'8"		
W = 5'0"	V-1	14 ea	#3	2'2"		
S = 8'0"	V-2	6 ea	#5	5'8"		#7 BAR IF BARRIER ON TOP OF WALL
SH = 2'6"	S-1	4 ea	#3	3'3"		
	TB-1	4 ea	#5	9'8"	7'6 1/2"	

REBAR SCHEDULE - 6.0 x 5.0 x 10.0 STANDARD TOP UNIT STEEL WT= 125.51 lbs

Unit Dim's	Bar Mark	Qnty	Size	Length	Dim 'A'	Remarks
H = 6'0"	H-1	7 ea	#4	4'8"		
W = 5'0"	V-1	18 ea	#3	2'2"		
S = 10'0"	V-2	6 ea	#5	5'8"		#7 BAR IF BARRIER ON TOP OF WALL
SH = 2'6"	S-1	4 ea	#3	3'3"		
	TB-1	4 ea	#5	11'8"	9'6 1/2"	

PA DOT DWG # 87-402 PE (REVISION IV)

COMMONWEALTH OF PENNSYLVANIA
DEPARTMENT OF TRANSPORTATION
BUREAU OF PROJECT DELIVERY

T-WALL® STANDARDS
PREFABRICATED T-WALL® RETAINING WALL SYSTEM

SHOP DRAWINGS
REBAR
STANDARD TOP UNITS (II)

4/13/2017

DESIGNER

THE NEEL COMPANY
8328-D TRAFORD LANE
SPRINGFIELD, VA 22152
PH: (703) 913-7858
FX: (703) 913-7859
Web: www.neelco.com

This drawing contains information proprietary to The Neel Company. The Neel Company is the exclusive licensee of the T-WALL® patent. © 2017, The Neel Company

DATE: 03-23-17
SCALE: NO SCALE
DESIGNED: CAA
DRAWN: CAA/ACS
CHECKED: CCG/KD
TNC JOB #: TW3634
TNC SHT #:16 OF 67

SHEET 16 OF 67

87-402 PE

DATE: 03-23-17 TNC JOB #: TW3634 PLOT DATE AND TIME: Wednesday, March 22, 2017 15:47:43 CAD FILE NAME: 015 Rebar - HWY Std Top r4-0.wxs

REBAR SCHEDULE -	5.0 x 5.0 x 4.0 STANDARD DOUBLE UNIT				STEEL WT=	69.98 lbs
Unit Dim's	Bar Mark	Qnty	Size	Length	Dim 'A'	Remarks
H = 5'0 1/2"	H-1	6 ea	#4	4'8"		
W = 5'0"	V-1	6 ea	#3	4'8 1/2"		
S = 4'0"	V-2	6 ea	#3	4'8 1/2"		
SH = 5'0 1/2"	S-1	6 ea	#3	3'3"		
	TB-1	6 ea	#4	5'8"	3'6 1/2"	

REBAR SCHEDULE -	5.0 x 5.0 x 6.0 STANDARD DOUBLE UNIT				STEEL WT=	85.08 lbs
Unit Dim's	Bar Mark	Qnty	Size	Length	Dim 'A'	Remarks
H = 5'0 1/2"	H-1	6 ea	#4	4'8"		
W = 5'0"	V-1	10 ea	#3	4'8 1/2"		
S = 6'0"	V-2	6 ea	#3	4'8 1/2"		
SH = 5'0 1/2"	S-1	6 ea	#3	3'3"		
	TB-1	6 ea	#4	7'8"	5'6 1/2"	

REBAR SCHEDULE -	5.0 x 5.0 x 8.0 STANDARD DOUBLE UNIT				STEEL WT=	100.17 lbs
Unit Dim's	Bar Mark	Qnty	Size	Length	Dim 'A'	Remarks
H = 5'0 1/2"	H-1	6 ea	#4	4'8"		
W = 5'0"	V-1	14 ea	#3	4'8 1/2"		
S = 8'0"	V-2	6 ea	#3	4'8 1/2"		
SH = 5'0 1/2"	S-1	6 ea	#3	3'3"		
	TB-1	6 ea	#4	9'8"	7'6 1/2"	

REBAR SCHEDULE -	5.0 x 5.0 x 10.0 STANDARD DOUBLE UNIT				STEEL WT=	115.27 lbs
Unit Dim's	Bar Mark	Qnty	Size	Length	Dim 'A'	Remarks
H = 5'0 1/2"	H-1	6 ea	#4	4'8"		
W = 5'0"	V-1	18 ea	#3	4'8 1/2"		
S = 10'0"	V-2	6 ea	#3	4'8 1/2"		
SH = 5'0 1/2"	S-1	6 ea	#3	3'3"		
	TB-1	6 ea	#4	11'8"	9'6 1/2"	

REBAR SCHEDULE -	5.0 x 5.0 x 12.0 STANDARD DOUBLE UNIT				STEEL WT=	130.36 lbs
Unit Dim's	Bar Mark	Qnty	Size	Length	Dim 'A'	Remarks
H = 5'0 1/2"	H-1	6 ea	#4	4'8"		
W = 5'0"	V-1	22 ea	#3	4'8 1/2"		
S = 12'0"	V-2	6 ea	#3	4'8 1/2"		
SH = 5'0 1/2"	S-1	6 ea	#3	3'3"		
	TB-1	6 ea	#4	13'8"	11'6 1/2"	

REBAR SCHEDULE -	5.0 x 5.0 x 14.0 STANDARD DOUBLE UNIT				STEEL WT=	186.40 lbs
Unit Dim's	Bar Mark	Qnty	Size	Length	Dim 'A'	Remarks
H = 5'0 1/2"	H-1	6 ea	#5	4'8"		
W = 5'0"	V-1	26 ea	#3	4'8 1/2"		
S = 14'0"	V-2	6 ea	#3	4'8 1/2"		
SH = 5'0 1/2"	S-1	6 ea	#4	3'3"		
	TB-1	6 ea	#5	15'8"	13'6 1/2"	

REBAR SCHEDULE -	5.0 x 5.0 x 16.0 STANDARD DOUBLE UNIT				STEEL WT=	206.00 lbs
Unit Dim's	Bar Mark	Qnty	Size	Length	Dim 'A'	Remarks
H = 5'0 1/2"	H-1	6 ea	#5	4'8"		
W = 5'0"	V-1	30 ea	#3	4'8 1/2"		
S = 16'0"	V-2	6 ea	#3	4'8 1/2"		
SH = 5'0 1/2"	S-1	6 ea	#4	3'3"		
	TB-1	6 ea	#5	17'8"	15'6 1/2"	

REBAR SCHEDULE -	5.0 x 5.0 x 18.0 STANDARD DOUBLE UNIT				STEEL WT=	225.59 lbs
Unit Dim's	Bar Mark	Qnty	Size	Length	Dim 'A'	Remarks
H = 5'0 1/2"	H-1	6 ea	#5	4'8"		
W = 5'0"	V-1	34 ea	#3	4'8 1/2"		
S = 18'0"	V-2	6 ea	#3	4'8 1/2"		
SH = 5'0 1/2"	S-1	6 ea	#4	3'3"		
	TB-1	6 ea	#5	19'8"	17'6 1/2"	

REBAR SCHEDULE -	5.0 x 5.0 x 20.0 STANDARD DOUBLE UNIT				STEEL WT=	245.19 lbs
Unit Dim's	Bar Mark	Qnty	Size	Length	Dim 'A'	Remarks
H = 5'0 1/2"	H-1	6 ea	#5	4'8"		
W = 5'0"	V-1	38 ea	#3	4'8 1/2"		
S = 20'0"	V-2	6 ea	#3	4'8 1/2"		
SH = 5'0 1/2"	S-1	6 ea	#4	3'3"		
	TB-1	6 ea	#5	21'8"	19'6 1/2"	

REBAR SCHEDULE -	5.0 x 5.0 x 22.0 STANDARD DOUBLE UNIT				STEEL WT=	264.78 lbs
Unit Dim's	Bar Mark	Qnty	Size	Length	Dim 'A'	Remarks
H = 5'0 1/2"	H-1	6 ea	#5	4'8"		
W = 5'0"	V-1	42 ea	#3	4'8 1/2"		
S = 22'0"	V-2	6 ea	#3	4'8 1/2"		
SH = 5'0 1/2"	S-1	6 ea	#4	3'3"		
	TB-1	6 ea	#5	23'8"	21'6 1/2"	

REBAR SCHEDULE -	5.0 x 5.0 x 24.0 STANDARD DOUBLE UNIT				STEEL WT=	284.38 lbs
Unit Dim's	Bar Mark	Qnty	Size	Length	Dim 'A'	Remarks
H = 5'0 1/2"	H-1	6 ea	#5	4'8"		
W = 5'0"	V-1	46 ea	#3	4'8 1/2"		
S = 24'0"	V-2	6 ea	#3	4'8 1/2"		
SH = 5'0 1/2"	S-1	6 ea	#4	3'3"		
	TB-1	6 ea	#5	25'8"	23'6 1/2"	

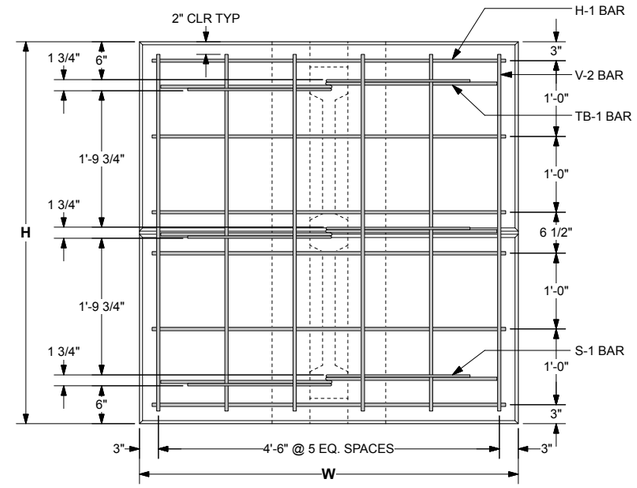

FRONT VIEW
(V-1 BARS IN STEM OMITTED FOR CLARITY)

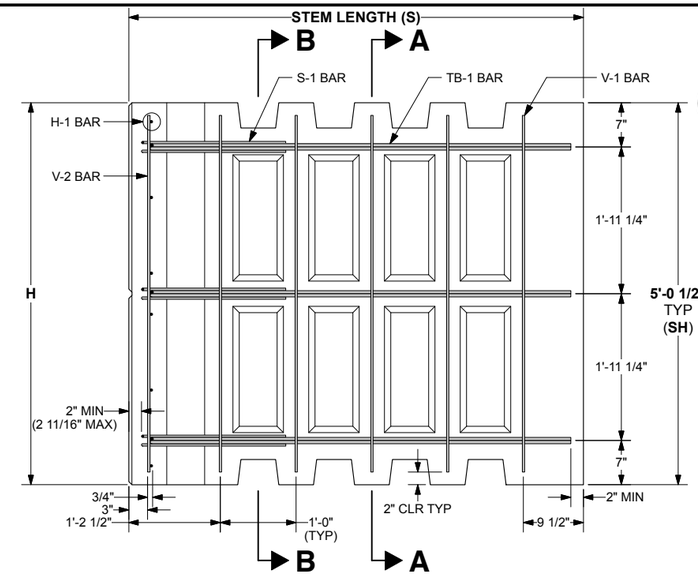

SIDE VIEW
6' STEM SHOWN

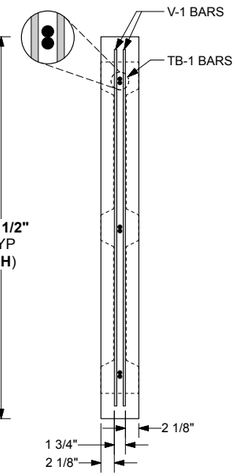

SECTION A-A

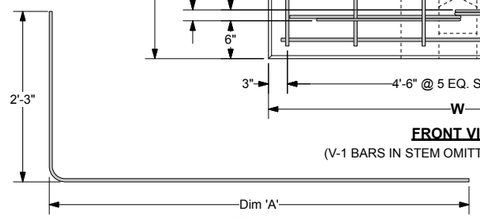

TB-1 BAR
6' STEM REBAR SHOWN

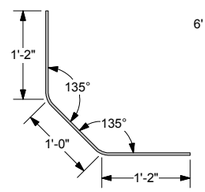

S-1 BAR

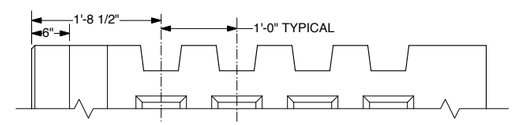

STRUCTURAL THICKNESS ONLY.
DOES NOT INCLUDE FORMLINER RELIEF

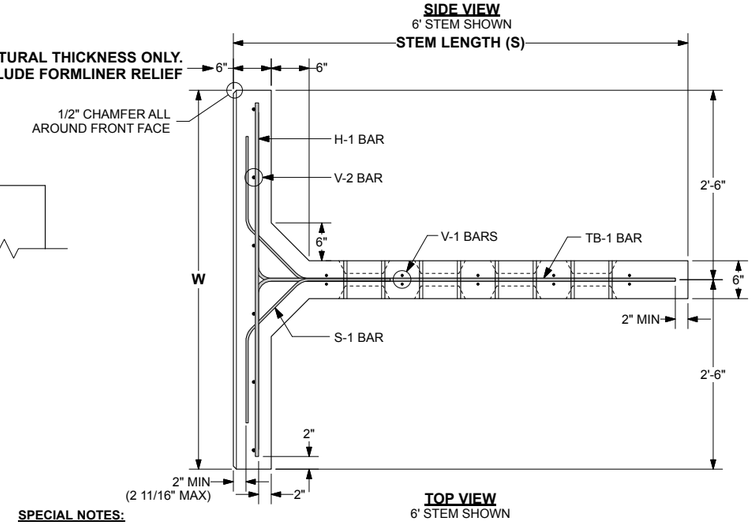

TOP VIEW
6' STEM SHOWN

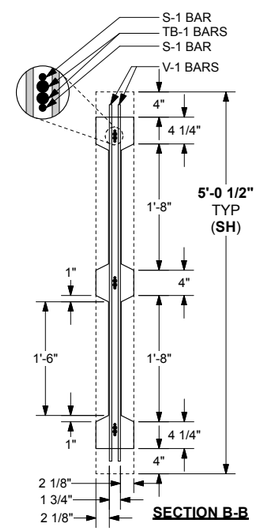

SECTION B-B

SPECIAL NOTES:

1. FRONT FACE OF T-WALL UNITS FINISH TREATMENT:
   - PER CONTRACT DRAWINGS AND SPECS.
2. TOP & BOTTOM SHEAR KEY BLOCKOUTS MAY BE LEFT OUT IN AN ALTERNATING PATTERN WHEN STEM LENGTHS BECOME LONGER THAN 10 FT (SPACED AT 2'0"). ALL BLOCKOUTS ARE REQUIRED IN THE STEM FOR THE FIRST 10FT OF LENGTH. REGARDLESS OF OVERALL LENGTH.

GENERAL NOTES:

1. PRIMARY REFERENCE: AASHTO LRFD BRIDGE SPECIFICATIONS, 3rd EDITION, 2006 WITH INTERIM REVISIONS
2. MINIMUM CONCRETE COVER IS DESIGNED FOR 2" ON ALL BARS. TOLERANCES PER CONSTRUCTION SPECIFICATIONS SECTION 2.0 ON SHEET 2 OF 15.
3. ALL MATERIAL AND TOLERANCES IN ACCORDS TO T-WALL CONSTRUCTION SPECIFICATIONS, SECTION 2.0 MATERIALS.
4. REBAR:
   - SEE CONSTRUCTION SPECIFICATION, SECTION 2.0 MATERIALS OR PER CONTRACT DRAWINGS AND SPECS.
5. CONCRETE:
   - STEM LENGTHS LESS THAN 24', USE F'c = 4000 psi @ 28 DAYS
   - STEM LENGTHS MORE THAN 24', USE F'c = 5000 psi @ 28 DAYS

UNIT TYPE	HEIGHT (H)	WIDTH (W)	STEM LENGTH (S)	SH	VOL	WEIGHT
5.0 x 5.0 x 4.0 DBL	5'0 1/2"	5'0"	4'0"	5'0 1/2"	0.78 cy	3,171 lbs
5.0 x 5.0 x 6.0 DBL	5'0 1/2"	5'0"	6'0"	5'0 1/2"	0.91 cy	3,692 lbs
5.0 x 5.0 x 8.0 DBL	5'0 1/2"	5'0"	8'0"	5'0 1/2"	1.04 cy	4,214 lbs
5.0 x 5.0 x 10.0 DBL	5'0 1/2"	5'0"	10'0"	5'0 1/2"	1.17 cy	4,736 lbs
5.0 x 5.0 x 12.0 DBL	5'0 1/2"	5'0"	12'0"	5'0 1/2"	1.30 cy	5,259 lbs
5.0 x 5.0 x 14.0 DBL	5'0 1/2"	5'0"	14'0"	5'0 1/2"	1.43 cy	5,781 lbs
5.0 x 5.0 x 16.0 DBL	5'0 1/2"	5'0"	16'0"	5'0 1/2"	1.56 cy	6,303 lbs
5.0 x 5.0 x 18.0 DBL	5'0 1/2"	5'0"	18'0"	5'0 1/2"	1.69 cy	6,825 lbs
5.0 x 5.0 x 20.0 DBL	5'0 1/2"	5'0"	20'0"	5'0 1/2"	1.81 cy	7,347 lbs
5.0 x 5.0 x 22.0 DBL	5'0 1/2"	5'0"	22'0"	5'0 1/2"	1.94 cy	7,870 lbs
5.0 x 5.0 x 24.0 DBL	5'0 1/2"	5'0"	24'0"	5'0 1/2"	2.07 cy	8,392 lbs

*UNIT VOLUME AND WEIGHT BASED ON 6" THICK FRONT FACE. ARCHITECTURAL FINISHES WILL INCREASE FACE THICKNESS, VOLUME AND WEIGHT.

PA DOT DWG # 87-402 PE (REVISION IV) 4/13/2017

COMMONWEALTH OF PENNSYLVANIA
DEPARTMENT OF TRANSPORTATION
BUREAU OF PROJECT DELIVERY

T-WALL® STANDARDS
PREFABRICATED T-WALL® RETAINING WALL SYSTEM

SHOP DRAWINGS
REBAR
STANDARD DOUBLE UNITS (I)

DESIGNER
THE NEEL COMPANY
8328-D TRAFORD LANE
SPRINGFIELD, VA 22152
PH: (703) 913-7858
FX: (703) 913-7859
Web: www.neelco.com

This drawing contains information proprietary to The Neel Company. The Neel Company is the exclusive licensee of the T-WALL® patent. © 2017, The Neel Company

DATE: 03-23-17
SCALE: NO SCALE
DESIGNED: CAA/ACS
DRAWN: CAA
CHECKED: CCG/KD
TNC JOB #: TW3634
TNC SHT #:17 OF 67

SHEET 17 OF 67

87-402 PE

DATE: 03-23-17 TNC JOB #: TW3634 PLOT DATE AND TIME: Wednesday, March 22, 2017 15:47:21 CAD FILE NAME: 017 Rebar - HWY Dbl r4-0.wxx

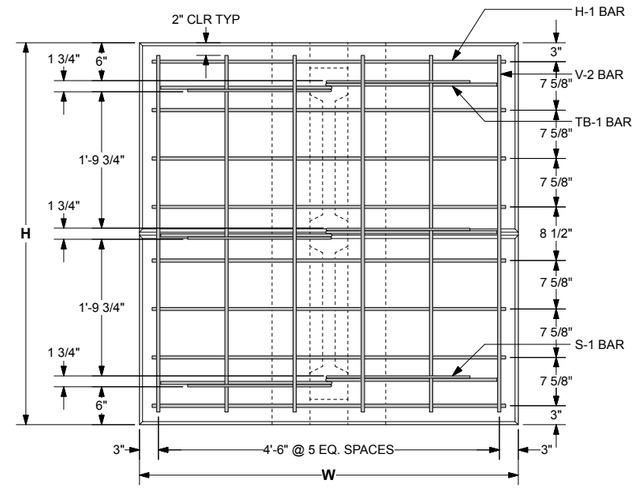

FRONT VIEW
(V-1 BARS IN STEM OMITTED FOR CLARITY)

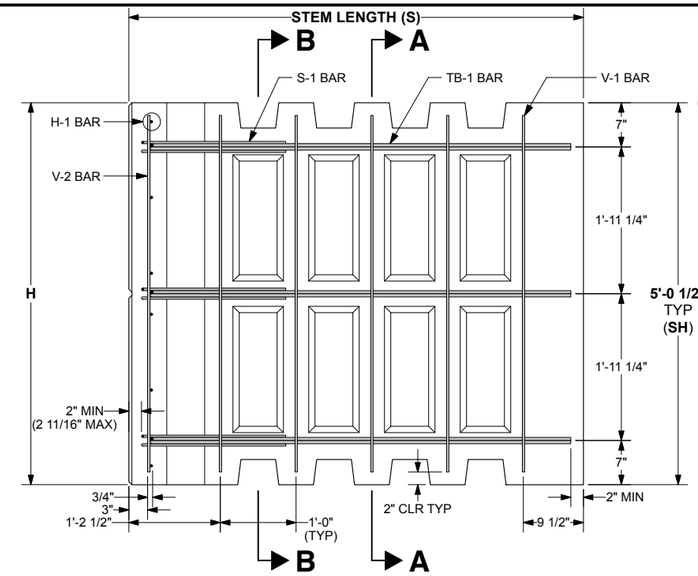

SIDE VIEW
6' STEM SHOWN

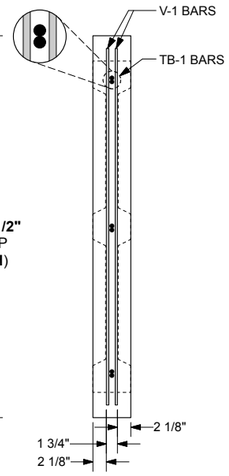

SECTION A-A

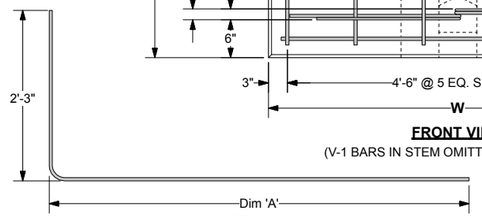

TB-1 BAR
6' STEM REBAR SHOWN

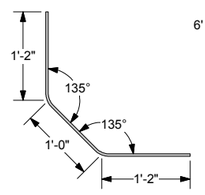

S-1 BAR

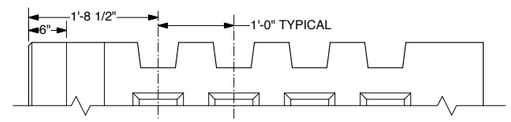

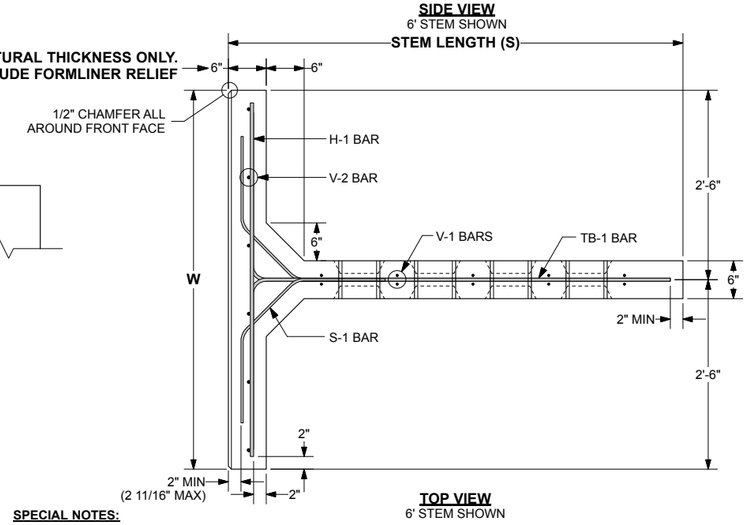

TOP VIEW
6' STEM SHOWN

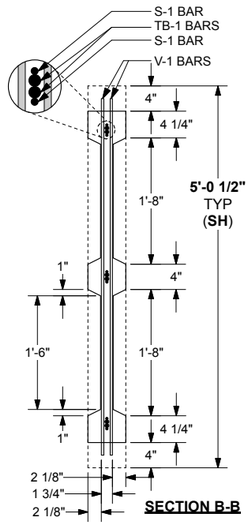

SECTION B-B

UNIT TYPE	HEIGHT (H)	WIDTH (W)	STEM LENGTH (S)	SH	VOL	WEIGHT
5.0 x 5.0 x 26.0 DBL	5'0 1/2"	5'0"	26'0"	5'0 1/2"	2.20 cy	8,914 lbs
5.0 x 5.0 x 28.0 DBL	5'0 1/2"	5'0"	28'0"	5'0 1/2"	2.33 cy	9,436 lbs
5.0 x 5.0 x 30.0 DBL	5'0 1/2"	5'0"	30'0"	5'0 1/2"	2.46 cy	9,958 lbs
5.0 x 5.0 x 32.0 DBL	5'0 1/2"	5'0"	32'0"	5'0 1/2"	2.59 cy	10,480 lbs

*UNIT VOLUME AND WEIGHT BASED ON 6" THICK FRONT FACE. ARCHITECTURAL FINISHES WILL INCREASE FACE THICKNESS, VOLUME AND WEIGHT.

REBAR SCHEDULE - 5.0 x 5.0 x 26.0 STANDARD DOUBLE UNIT STEEL WT= 324.21 lbs

Unit Dim's	Bar Mark	Qnty	Size	Length	Dim 'A'	Remarks
H = 5'0 1/2"	H-1	8 ea	#5	4'8"		
W = 5'0"	V-1	50 ea	#3	4'8 1/2"		
S = 26'0"	V-2	6 ea	#3	4'8 1/2"		
SH = 5'0 1/2"	S-1	6 ea	#4	3'3"		
	TB-1	6 ea	#5	27'8"	25'6 1/2"	

REBAR SCHEDULE - 5.0 x 5.0 x 28.0 STANDARD DOUBLE UNIT STEEL WT= 343.80 lbs

Unit Dim's	Bar Mark	Qnty	Size	Length	Dim 'A'	Remarks
H = 5'0 1/2"	H-1	8 ea	#5	4'8"		
W = 5'0"	V-1	54 ea	#3	4'8 1/2"		
S = 28'0"	V-2	6 ea	#3	4'8 1/2"		
SH = 5'0 1/2"	S-1	6 ea	#4	3'3"		
	TB-1	6 ea	#5	29'8"	27'6 1/2"	

REBAR SCHEDULE - 5.0 x 5.0 x 30.0 STANDARD DOUBLE UNIT STEEL WT= 363.40 lbs

Unit Dim's	Bar Mark	Qnty	Size	Length	Dim 'A'	Remarks
H = 5'0 1/2"	H-1	8 ea	#5	4'8"		
W = 5'0"	V-1	58 ea	#3	4'8 1/2"		
S = 30'0"	V-2	6 ea	#3	4'8 1/2"		
SH = 5'0 1/2"	S-1	6 ea	#4	3'3"		
	TB-1	6 ea	#5	31'8"	29'6 1/2"	

REBAR SCHEDULE - 5.0 x 5.0 x 32.0 STANDARD DOUBLE UNIT STEEL WT= 382.99 lbs

Unit Dim's	Bar Mark	Qnty	Size	Length	Dim 'A'	Remarks
H = 5'0 1/2"	H-1	8 ea	#5	4'8"		
W = 5'0"	V-1	62 ea	#3	4'8 1/2"		
S = 32'0"	V-2	6 ea	#3	4'8 1/2"		
SH = 5'0 1/2"	S-1	6 ea	#4	3'3"		
	TB-1	6 ea	#5	33'8"	31'6 1/2"	

SPECIAL NOTES:

1. FRONT FACE OF T-WALL UNITS FINISH TREATMENT:
   - PER CONTRACT DRAWINGS AND SPECS.
2. TOP & BOTTOM SHEAR KEY BLOCKOUTS MAY BE LEFT OUT IN AN ALTERNATING PATTERN WHEN STEM LENGTHS BECOME LONGER THAN 10 FT (SPACED AT 2'0"). ALL BLOCKOUTS ARE REQUIRED IN THE STEM FOR THE FIRST 10FT OF LENGTH. REGARDLESS OF OVERALL LENGTH.

GENERAL NOTES:

1. PRIMARY REFERENCE: AASHTO LRFD BRIDGE SPECIFICATIONS, 3rd EDITION, 2006 WITH INTERIM REVISIONS
2. MINIMUM CONCRETE COVER IS DESIGNED FOR 2" ON ALL BARS. TOLERANCES PER CONSTRUCTION SPECIFICATIONS SECTION 2.0 ON SHEET 2 OF 15.
3. ALL MATERIAL AND TOLERANCES IN ACCORDS TO T-WALL CONSTRUCTION SPECIFICATIONS, SECTION 2.0 MATERIALS.
4. REBAR:
   - SEE CONSTRUCTION SPECIFICATION, SECTION 2.0 MATERIALS OR PER CONTRACT DRAWINGS AND SPECS.
5. CONCRETE:
   - STEM LENGTHS LESS THAN 24', USE F'c = 4000 psi @ 28 DAYS
   - STEM LENGTHS MORE THAN 24', USE F'c = 5000 psi @ 28 DAYS

4/13/2017

DESIGNER

THE NEEL COMPANY
8328-D TRAFORD LANE
SPRINGFIELD, VA 22152
PH: (703) 913-7858
FX: (703) 913-7859
Web: www.neelco.com

This drawing contains information proprietary to The Neel Company. The Neel Company is the exclusive licensee of the T-WALL® patent. © 2017, The Neel Company

DATE:	03-23-17
SCALE:	NO SCALE
DESIGNED:	CAA/ACS
DRAWN:	CAA
CHECKED:	CCG/KD
TNC JOB #:	TW3634
TNC SHT #:	18 OF 67

PA DOT DWG # 87-402 PE (REVISION IV)

COMMONWEALTH OF PENNSYLVANIA
DEPARTMENT OF TRANSPORTATION
BUREAU OF PROJECT DELIVERY

T-WALL® STANDARDS
PREFABRICATED T-WALL® RETAINING WALL SYSTEM

SHOP DRAWINGS
REBAR
STANDARD DOUBLE UNITS (II)

SHEET 18 OF 67

87-402 PE

DATE: 03-23-17 TNC JOB #: TW3634 PLOT DATE AND TIME: Wednesday, March 22, 2017 15:47:21 CAD FILE NAME: 017 Rebar - HWY Dbl r4-0.vwx

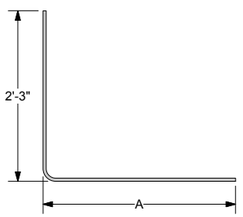

TB-1 BAR

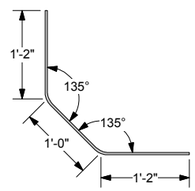

S-1 BAR

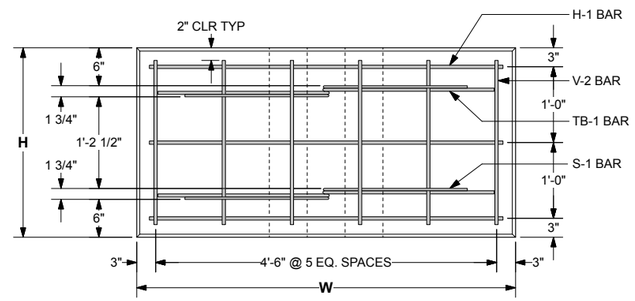

FRONT VIEW

(V-1 BARS IN STEM OMITTED FOR CLARITY)

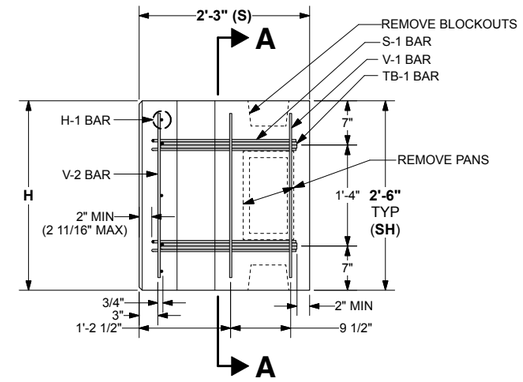

SIDE VIEW

2.25' STEM SHOWN

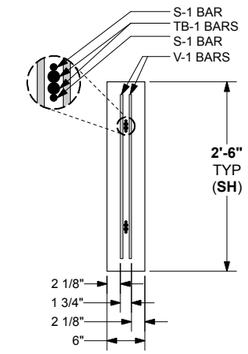

SECTION A-A

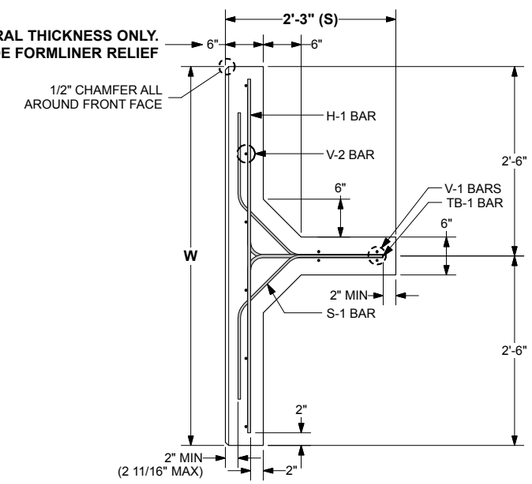

TOP VIEW

2.25' STEM SHOWN

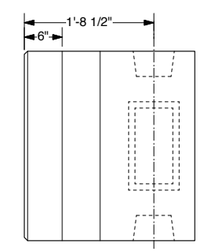

SPECIAL NOTES:

1. FRONT FACE OF T-WALL UNITS FINISH TREATMENT:
   - PER CONTRACT DRAWINGS AND SPECS.

GENERAL NOTES:

1. PRIMARY REFERENCE: AASHTO LRFD BRIDGE SPECIFICATIONS, 3rd EDITION, 2006 WITH INTERIM REVISIONS
2. MINIMUM CONCRETE COVER IS DESIGNED FOR 2" ON ALL BARS. TOLERANCES PER CONSTRUCTION SPECIFICATIONS SECTION 2.0 ON SHEET 2 OF 15.
3. ALL MATERIAL AND TOLERANCES IN ACCORDS TO T-WALL CONSTRUCTION SPECIFICATIONS, SECTION 2.0 MATERIALS.
4. REBAR:
   - SEE CONSTRUCTION SPECIFICATION, SECTION 2.0 MATERIALS OR PER CONTRACT DRAWINGS AND SPECS.
5. CONCRETE:
   - F'c = 4000 psi @ 28 DAYS

UNIT TYPE	HEIGHT (H)	WIDTH (W)	STEM LENGTH (S)	SH	VOL*	WEIGHT*
2.5 x 5.0 x 2.25 STD CNR	2'6"	5'0"	2'3"	2'6"	0.33 cy	1,345 lbs

*UNIT VOLUME AND WEIGHT BASED ON 6" THICK FRONT FACE. ARCHITECTURAL FINISHES WILL INCREASE FACE THICKNESS, VOLUME AND WEIGHT.

REBAR SCHEDULE - 2.5 x 5.0 x 2.25 STANDARD CORNER UNIT STEEL WT= 42.52 lbs

Unit Dim's	Bar Mark	Qnty	Size	Length	Dim 'A'	Remarks
H = 2'6"	H-1	3 ea	#4	4'8"		
W = 5'0"	V-1	4 ea	#3	2'2"		
S = 2'3"	V-2	6 ea	#3	2'2"		
SH = 2'6"	S-1	4 ea	#4	3'3"		
	TB-1	4 ea	#5	3'11"	1'9 1/2"	

4/13/2017

DESIGNER

THE NEEL COMPANY
8328-D TRAFORD LANE
SPRINGFIELD, VA 22152
PH: (703) 913-7858
FX: (703) 913-7859
Web: www.neelco.com

This drawing contains information proprietary to The Neel Company. The Neel Company is the exclusive licensee of the T-WALL® patent. © 2017, The Neel Company

DATE:	03-23-17
SCALE:	NO SCALE
DESIGNED:	CAA
DRAWN:	ACS
CHECKED:	CCG/KD
TNC JOB #:	TW3634
TNC SHT #:	19 OF 67

PA DOT DWG # 87-402 PE (REVISION IV)

COMMONWEALTH OF PENNSYLVANIA
DEPARTMENT OF TRANSPORTATION
BUREAU OF PROJECT DELIVERY

T-WALL® STANDARDS

PREFABRICATED T-WALL® RETAINING WALL SYSTEM

SHOP DRAWINGS

REBAR

2.25' STEM STANDARD CORNER UNITS

87-402 PE

DATE: 03-23-17 TNC JOB #: TW3634 PLOT DATE AND TIME: Wednesday, March 22, 2017 15:47:15 CAD FILE NAME: 019 Rebar - HWY Std Cnr 2.25 r4-0.vwx

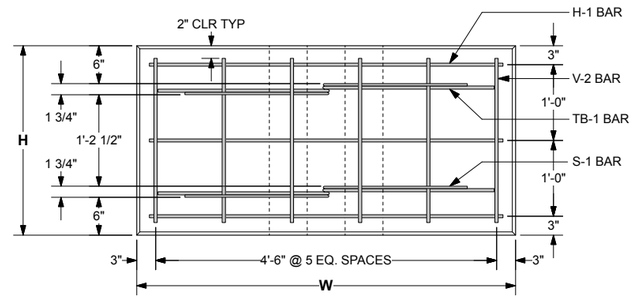

FRONT VIEW

(V-1 BARS IN STEM OMITTED FOR CLARITY)

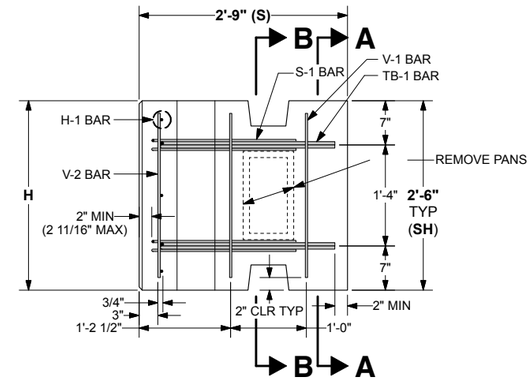

SIDE VIEW

2.75' STEM SHOWN

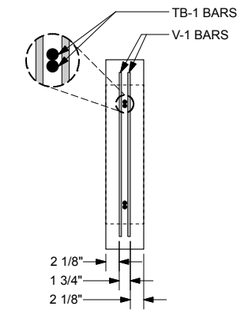

SECTION A-A

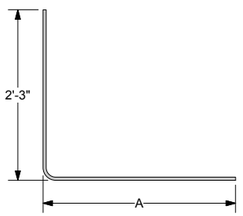

TB-1 BAR

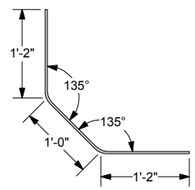

S-1 BAR

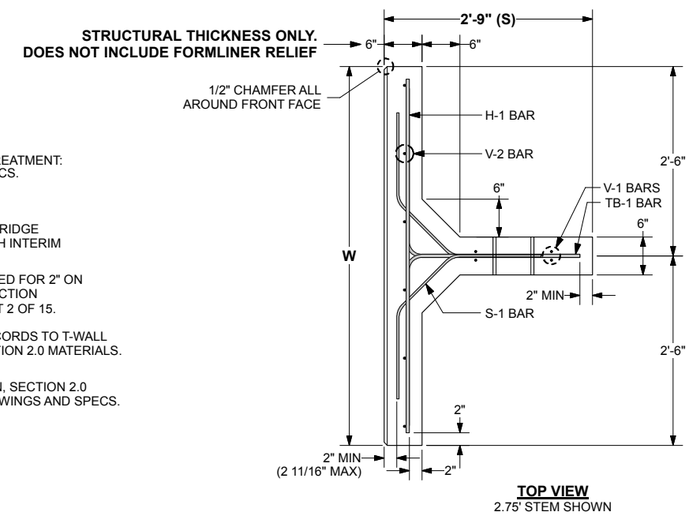

TOP VIEW

2.75' STEM SHOWN

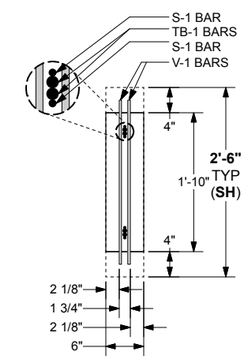

SECTION B-B

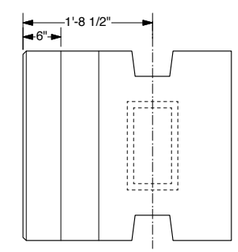

SPECIAL NOTES:

1. FRONT FACE OF T-WALL UNITS FINISH TREATMENT:
   - PER CONTRACT DRAWINGS AND SPECS.

GENERAL NOTES:

1. PRIMARY REFERENCE: AASHTO LRFD BRIDGE SPECIFICATIONS, 3rd EDITION, 2006 WITH INTERIM REVISIONS
2. MINIMUM CONCRETE COVER IS DESIGNED FOR 2" ON ALL BARS. TOLERANCES PER CONSTRUCTION SPECIFICATIONS SECTION 2.0 ON SHEET 2 OF 15.
3. ALL MATERIAL AND TOLERANCES IN ACCORDS TO T-WALL CONSTRUCTION SPECIFICATIONS, SECTION 2.0 MATERIALS.
4. REBAR:
   - SEE CONSTRUCTION SPECIFICATION, SECTION 2.0 MATERIALS OR PER CONTRACT DRAWINGS AND SPECS.
5. CONCRETE:
   - F'c = 4000 psi @ 28 DAYS

UNIT TYPE	HEIGHT (H)	WIDTH (W)	STEM LENGTH (S)	SH	VOL*	WEIGHT*
2.5 x 5.0 x 2.75 STD CNR	2'6"	5'0"	2'9"	2'6"	0.35 cy	1,411 lbs

*UNIT VOLUME AND WEIGHT BASED ON 6" THICK FRONT FACE. ARCHITECTURAL FINISHES WILL INCREASE FACE THICKNESS, VOLUME AND WEIGHT.

REBAR SCHEDULE - 2.5 x 5.0 x 2.75 STANDARD CORNER UNIT STEEL WT= 44.61 lbs

Unit Dim's	Bar Mark	Qnty	Size	Length	Dim 'A'	Remarks
H = 2'6"	H-1	3 ea	#4	4'8"		
W = 5'0"	V-1	4 ea	#3	2'2"		
S = 2'9"	V-2	6 ea	#3	2'2"		
SH = 2'6"	S-1	4 ea	#4	3'3"		
	TB-1	4 ea	#5	4'5"	2'3 1/2"	

4/13/2017

DESIGNER

THE NEEL COMPANY
8328-D TRAFORD LANE
SPRINGFIELD, VA 22152
PH: (703) 913-7858
FX: (703) 913-7859
Web: www.neelco.com

This drawing contains information proprietary to The Neel Company. The Neel Company is the exclusive licensee of the T-WALL® patent. © 2017, The Neel Company

DATE:	03-23-17
SCALE:	NO SCALE
DESIGNED:	CAA
DRAWN:	ACS
CHECKED:	CCG/KD
TNC JOB #:	TW3634
TNC SHT	#20 OF 67

PA DOT DWG # 87-402 PE (REVISION IV)

COMMONWEALTH OF PENNSYLVANIA
DEPARTMENT OF TRANSPORTATION
BUREAU OF PROJECT DELIVERY

T-WALL® STANDARDS

PREFABRICATED T-WALL® RETAINING WALL SYSTEM

SHOP DRAWINGS

REBAR

2.75' STEM STANDARD CORNER UNITS

SHEET 20 OF 67

87-402 PE

DATE: 03-23-17 TNC JOB #: TW3634 PLOT DATE AND TIME: Wednesday, March 22, 2017 15:47:07 CAD FILE NAME: 020 Rebar - HWY Std Cnr 2.75 r4-0.vwx

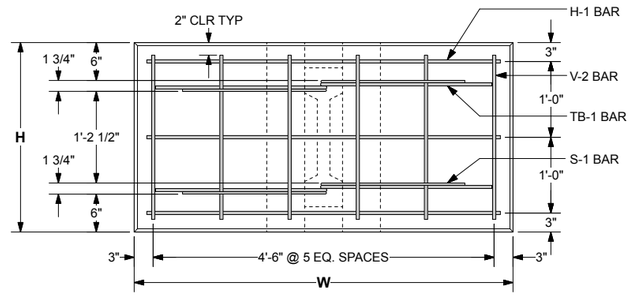

FRONT VIEW

(V-1 BARS IN STEM OMITTED FOR CLARITY)

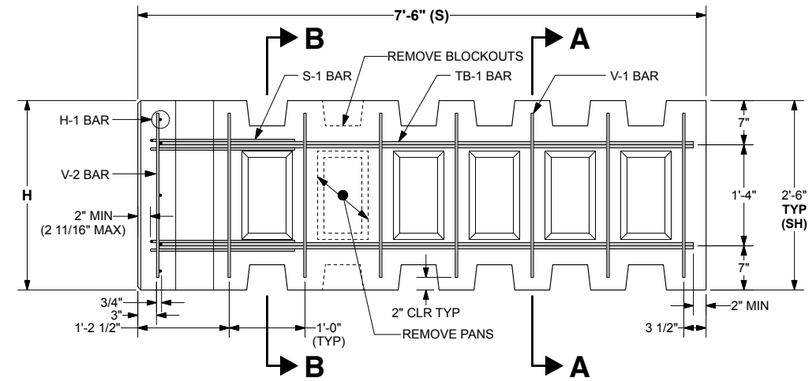

SIDE VIEW

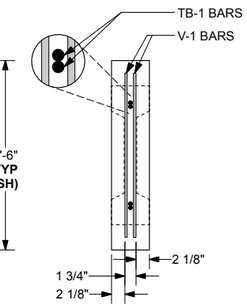

SECTION A-A

TB-1 BAR

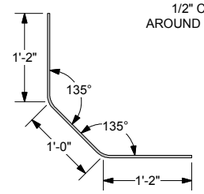

S-1 BAR

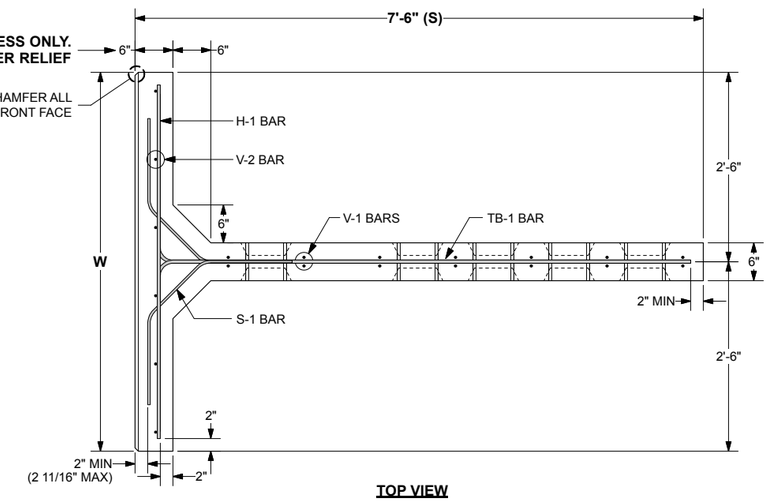

TOP VIEW

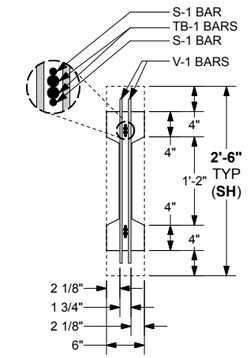

SECTION B-B

UNIT TYPE	HEIGHT (H)	WIDTH (W)	STEM LENGTH (S)	SH	VOL*	WEIGHT*
2.5 x 5.0 x 7.5 STD CNR	2'6"	5'0"	7'6"	2'6"	0.50 cy	2,033 lbs

*UNIT VOLUME AND WEIGHT BASED ON 6" THICK FRONT FACE. ARCHITECTURAL FINISHES WILL INCREASE FACE THICKNESS, VOLUME AND WEIGHT.

REBAR SCHEDULE - 2.5 x 5.0 x 7.5 STANDARD CORNER UNIT STEEL WT= 72.57 lbs

Unit Dim's	Bar Mark	Qnty	Size	Length	Dim 'A'	Remarks
H = 2'6"	H-1	3 ea	#4	4'8"		
W = 5'0"	V-1	14 ea	#3	2'2"		
S = 7'6"	V-2	6 ea	#3	2'2"		
SH = 2'6"	S-1	4 ea	#4	3'3"		
	TB-1	4 ea	#5	9'2"	7'0 1/2"	

SPECIAL NOTES:

1. FRONT FACE OF T-WALL UNITS FINISH TREATMENT:
   - PER CONTRACT DRAWINGS AND SPECS.
2. TOP & BOTTOM SHEAR KEY BLOCKOUTS MAY BE LEFT OUT IN AN ALTERNATING PATTERN WHEN STEM LENGTHS BECOME LONGER THAN 10 FT (SPACED AT 2'0"). ALL BLOCKOUTS ARE REQUIRED IN THE STEM FOR THE FIRST 10FT OF LENGTH. REGARDLESS OF OVERALL LENGTH.

GENERAL NOTES:

1. PRIMARY REFERENCE: AASHTO LRFD BRIDGE SPECIFICATIONS, 3rd EDITION, 2006 WITH INTERIM REVISIONS
2. MINIMUM CONCRETE COVER IS DESIGNED FOR 2" ON ALL BARS. TOLERANCES PER CONSTRUCTION SPECIFICATIONS SECTION 2.0 ON SHEET 2 OF 15.
3. ALL MATERIAL AND TOLERANCES IN ACCORDS TO T-WALL CONSTRUCTION SPECIFICATIONS, SECTION 2.0 MATERIALS.
4. REBAR:
   - SEE CONSTRUCTION SPECIFICATION, SECTION 2.0 MATERIALS OR PER CONTRACT DRAWINGS AND SPECS.
5. CONCRETE:
   - F'c = 4000 psi @ 28 DAYS

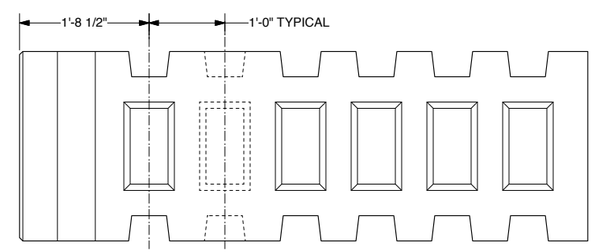

PA DOT DWG # 87-402 PE (REVISION IV)

4/13/2017

DESIGNER

THE NEEL COMPANY
8328-D TRAFORD LANE
SPRINGFIELD, VA 22152
PH: (703) 913-7858
FX: (703) 913-7859
Web: www.neelco.com

This drawing contains information proprietary to The Neel Company. The Neel Company is the exclusive licensee of the T-WALL® patent. © 2017, The Neel Company

DATE:	03-23-17
SCALE:	NO SCALE
DESIGNED:	CAA
DRAWN:	ACS
CHECKED:	CCG/KD
TNC JOB #:	TW3634
TNC SHT #21 OF 67	

COMMONWEALTH OF PENNSYLVANIA
DEPARTMENT OF TRANSPORTATION
BUREAU OF PROJECT DELIVERY

T-WALL® STANDARDS
PREFABRICATED T-WALL® RETAINING WALL SYSTEM

SHOP DRAWINGS
REBAR
7.5' STEM STANDARD CORNER UNITS

DATE: 03-23-17 TNC JOB #: TW3634 PLOT DATE AND TIME: Wednesday, March 22, 2017 15:46:57 CAD FILE NAME: 021 Rebar - HWY Std Cnr 7.50 r4-0.vwx

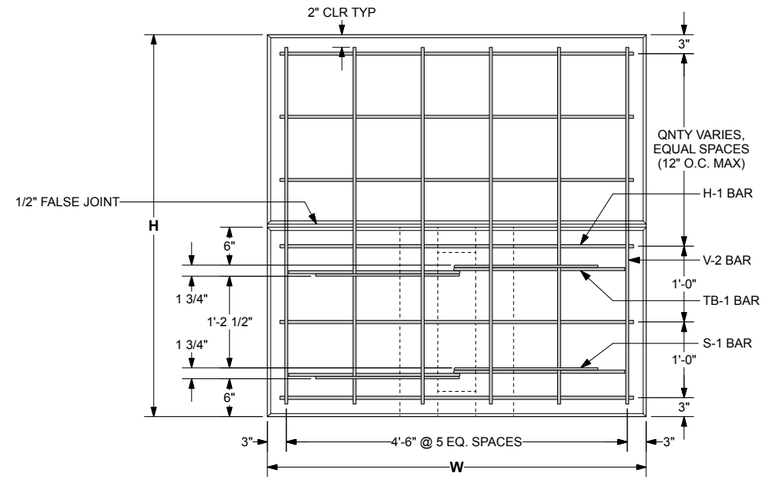

FRONT VIEW
(V-1 BARS IN STEM OMITTED FOR CLARITY)

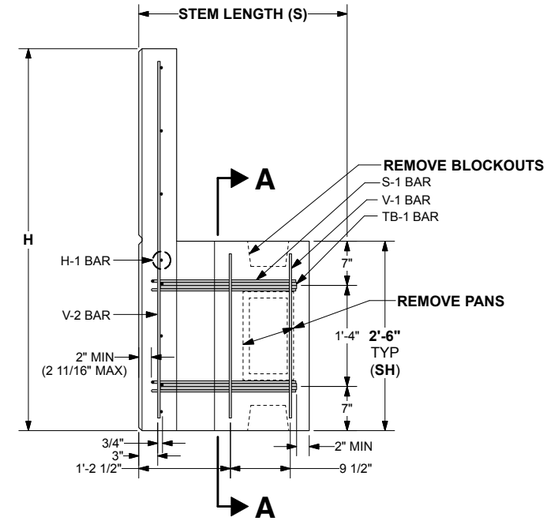

SIDE VIEW
2.25' STEM SHOWN

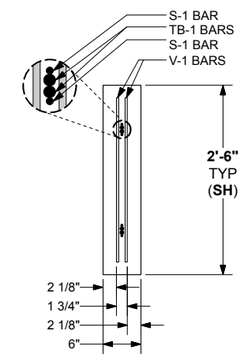

SECTION A-A

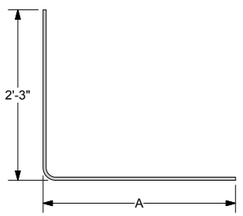

TB-1 BAR

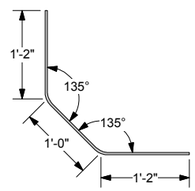

S-1 BAR

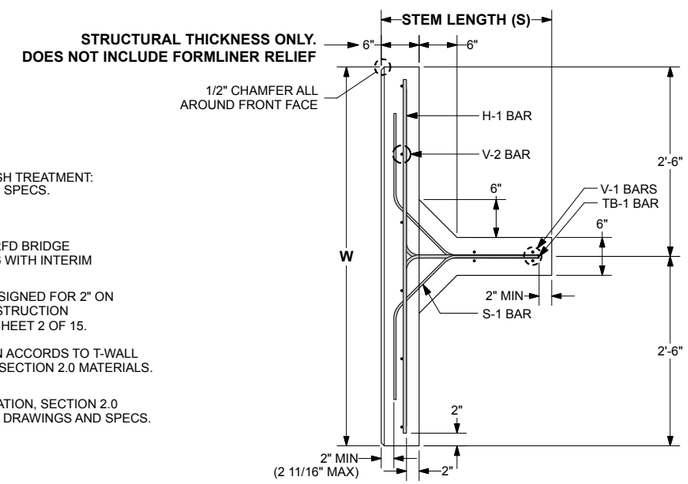

TOP VIEW
2.25' STEM SHOWN

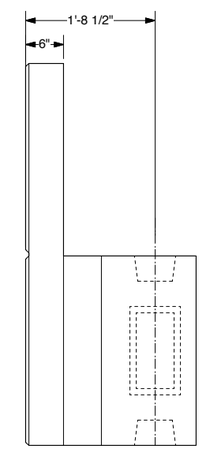

SPECIAL NOTES:

1. FRONT FACE OF T-WALL UNITS FINISH TREATMENT:
   - PER CONTRACT DRAWINGS AND SPECS.

GENERAL NOTES:

1. PRIMARY REFERENCE: AASHTO LRFD BRIDGE SPECIFICATIONS, 3rd EDITION, 2006 WITH INTERIM REVISIONS
2. MINIMUM CONCRETE COVER IS DESIGNED FOR 2" ON ALL BARS. TOLERANCES PER CONSTRUCTION SPECIFICATIONS SECTION 2.0 ON SHEET 2 OF 15.
3. ALL MATERIAL AND TOLERANCES IN ACCORDS TO T-WALL CONSTRUCTION SPECIFICATIONS, SECTION 2.0 MATERIALS.
4. REBAR:
   - SEE CONSTRUCTION SPECIFICATION, SECTION 2.0 MATERIALS OR PER CONTRACT DRAWINGS AND SPECS.
5. CONCRETE:
   - F'c = 4000 psi @ 28 DAYS

UNIT TYPE	H	W	S	SH	VOL	WEIGHT
3.0 x 5.0 x 2.25 STD	3'0 1/2"	5'0"	2'3"	2'6"	0.38 cy	1,542 lbs
3.5 x 5.0 x 2.25 STD	3'6 1/2"	5'0"	2'3"	2'6"	0.42 cy	1,711 lbs
4.0 x 5.0 x 2.25 STD	4'0 1/2"	5'0"	2'3"	2'6"	0.46 cy	1,880 lbs
4.5 x 5.0 x 2.25 STD	4'6 1/2"	5'0"	2'3"	2'6"	0.51 cy	2,048 lbs
5.0 x 5.0 x 2.25 STD	5'0 1/2"	5'0"	2'3"	2'6"	0.55 cy	2,217 lbs

*UNIT VOLUME AND WEIGHT BASED ON 6" THICK FRONT FACE. ARCHITECTURAL FINISHES WILL INCREASE FACE THICKNESS, VOLUME AND WEIGHT.

REBAR SCHEDULE - 3.0 x 5.0 x 2.25 STANDARD TOP CORNER UNIT

Unit Dim's	Bar Mark	Qnty	Size	Length	Dim 'A'	Remarks
H = 3'0 1/2"	H-1	4 ea	#4	4'8"		
W = 5'0"	V-1	3 ea	#4	2'2"		
S = 2'3"	V-2	6 ea	#5	2'8 1/2"		
SH =2'6"	S-1	4 ea	#4	3'4"		
	TB-1	4 ea	#4	4'0 1/2"	1'9 1/2"	

REBAR SCHEDULE - 3.5 x 5.0 x 2.25 STANDARD TOP CORNER UNIT

Unit Dim's	Bar Mark	Qnty	Size	Length	Dim 'A'	Remarks
H = 3'6 1/2"	H-1	5 ea	#4	4'8"		
W = 5'0"	V-1	3 ea	#4	2'2"		
S = 2'3"	V-2	6 ea	#5	3'2 1/2"		
SH =2'6"	S-1	4 ea	#4	3'4"		
	TB-1	4 ea	#4	4'0 1/2"	1'9 1/2"	

REBAR SCHEDULE - 4.0 x 5.0 x 2.25 STANDARD TOP CORNER UNIT

Unit Dim's	Bar Mark	Qnty	Size	Length	Dim 'A'	Remarks
H = 4'0 1/2"	H-1	5 ea	#4	4'8"		
W = 5'0"	V-1	3 ea	#4	2'2"		
S = 2'3"	V-2	6 ea	#5	3'8 1/2"		
SH =2'6"	S-1	4 ea	#4	3'4"		
	TB-1	4 ea	#4	4'0 1/2"	1'9 1/2"	

REBAR SCHEDULE - 4.5 x 5.0 x 2.25 STANDARD TOP CORNER UNIT

Unit Dim's	Bar Mark	Qnty	Size	Length	Dim 'A'	Remarks
H = 4'6 1/2"	H-1	6 ea	#4	4'8"		
W = 5'0"	V-1	3 ea	#4	2'2"		
S = 2'3"	V-2	6 ea	#5	4'2 1/2"		
SH =2'6"	S-1	4 ea	#4	3'4"		
	TB-1	4 ea	#4	4'0 1/2"	1'9 1/2"	

REBAR SCHEDULE - 5.0 x 5.0 x 2.25 STANDARD TOP CORNER UNIT

Unit Dim's	Bar Mark	Qnty	Size	Length	Dim 'A'	Remarks
H = 5'0 1/2"	H-1	6 ea	#4	4'8"		
W = 5'0"	V-1	3 ea	#4	2'2"		
S = 2'3"	V-2	6 ea	#5	4'8 1/2"		
SH =2'6"	S-1	4 ea	#4	3'4"		
	TB-1	4 ea	#4	4'0 1/2"	1'9 1/2"	

4/13/2017

DESIGNER
THE NEEL COMPANY
8328-D TRAFORD LANE
SPRINGFIELD, VA 22152
PH: (703) 913-7858
FX: (703) 913-7859
Web: www.neelco.com

This drawing contains information proprietary to The Neel Company. The Neel Company is the exclusive licensee of the T-WALL® patent. © 2017, The Neel Company

DATE: 03-23-17
SCALE: NO SCALE
DESIGNED: CAA
DRAWN: ACS
CHECKED: CCG/KD
TNC JOB #: TW3634
TNC SHT #22 OF 67

PA DOT DWG # 87-402 PE (REVISION IV)

COMMONWEALTH OF PENNSYLVANIA
DEPARTMENT OF TRANSPORTATION
BUREAU OF PROJECT DELIVERY

T-WALL® STANDARDS
PREFABRICATED T-WALL® RETAINING WALL SYSTEM

SHOP DRAWINGS
REBAR
2.25' STEM STANDARD TOP CORNER UNITS

DATE: 03-23-17 TNC JOB #: TW3634 PLOT DATE AND TIME: Wednesday, March 22, 2017 15:46:49 CAD FILE NAME: 022 Rebar - HWY Std Top Cnr 2.25 r4-0.vwx

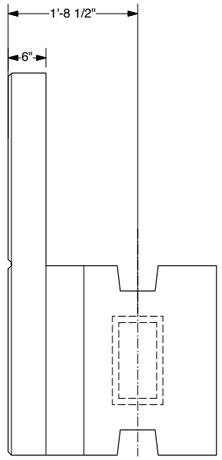

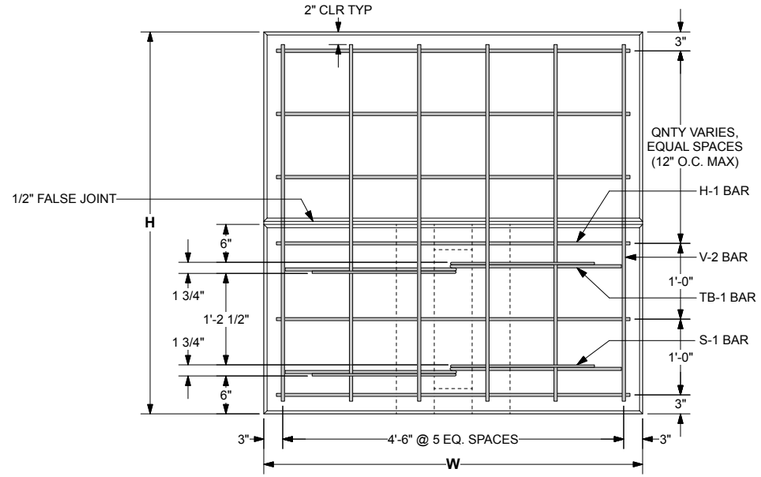

FRONT VIEW
(V-1 BARS IN STEM OMITTED FOR CLARITY)

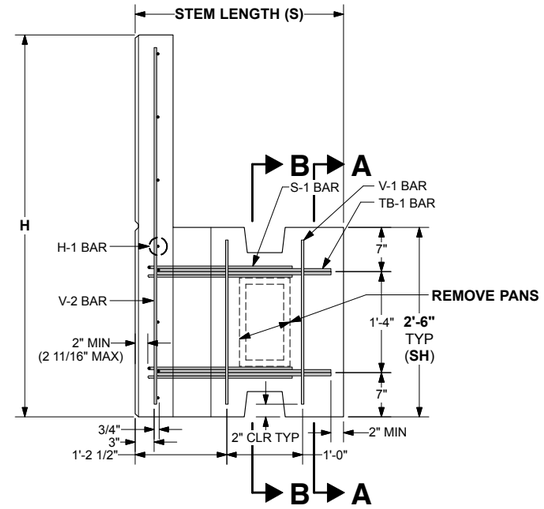

SIDE VIEW
2.75' STEM SHOWN

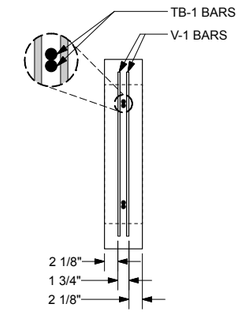

SECTION A-A

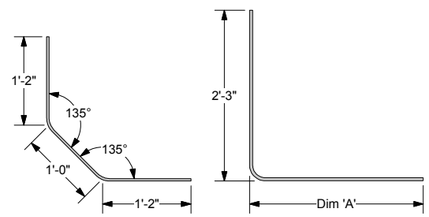

S-1 BAR **TB-1 BAR**

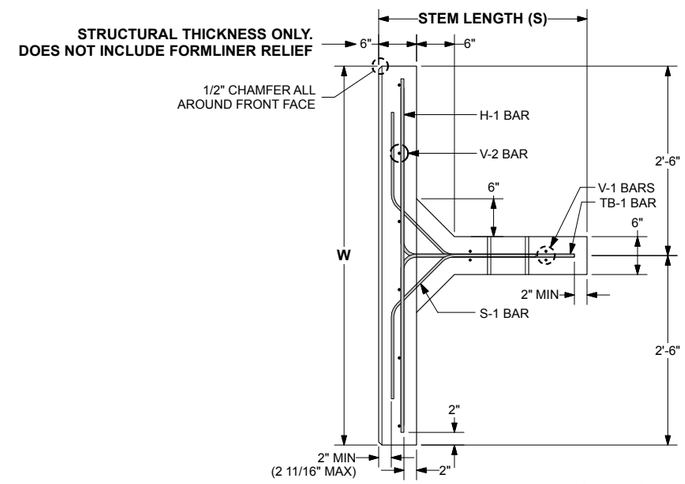

TOP VIEW
2.75' STEM SHOWN

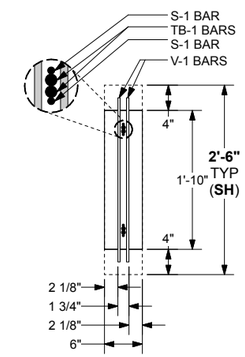

SECTION B-B

REBAR SCHEDULE - 3.0 x 5.0 x 2.75 STANDARD TOP CORNER UNIT

Unit Dim's	Bar Mark	Qnty	Size	Length	Dim 'A'	Remarks
H = 3'0 1/2"	H-1	4 ea	#4	4'8"		
W = 5'0"	V-1	4 ea	#4	2'2"		
S = 2'9"	V-2	6 ea	#5	2'8 1/2"		
SH =2'6"	S-1	4 ea	#4	3'4"		
	TB-1	4 ea	#4	4'6 1/2"	2'3 1/2"	

REBAR SCHEDULE - 3.5 x 5.0 x 2.75 STANDARD TOP CORNER UNIT

Unit Dim's	Bar Mark	Qnty	Size	Length	Dim 'A'	Remarks
H = 3'6 1/2"	H-1	5 ea	#4	4'8"		
W = 5'0"	V-1	4 ea	#4	2'2"		
S = 2'9"	V-2	6 ea	#5	3'2 1/2"		
SH =2'6"	S-1	4 ea	#4	3'4"		
	TB-1	4 ea	#4	4'6 1/2"	2'3 1/2"	

REBAR SCHEDULE - 4.0 x 5.0 x 2.75 STANDARD TOP CORNER UNIT

Unit Dim's	Bar Mark	Qnty	Size	Length	Dim 'A'	Remarks
H = 4'0 1/2"	H-1	5 ea	#4	4'8"		
W = 5'0"	V-1	4 ea	#4	2'2"		
S = 2'9"	V-2	6 ea	#5	3'8 1/2"		
SH =2'6"	S-1	4 ea	#4	3'4"		
	TB-1	4 ea	#4	4'6 1/2"	2'3 1/2"	

REBAR SCHEDULE - 4.5 x 5.0 x 2.75 STANDARD TOP CORNER UNIT

Unit Dim's	Bar Mark	Qnty	Size	Length	Dim 'A'	Remarks
H = 4'6 1/2"	H-1	6 ea	#4	4'8"		
W = 5'0"	V-1	4 ea	#4	2'2"		
S = 2'9"	V-2	6 ea	#5	4'2 1/2"		
SH =2'6"	S-1	4 ea	#4	3'4"		
	TB-1	4 ea	#4	4'6 1/2"	2'3 1/2"	

REBAR SCHEDULE - 5.0 x 5.0 x 2.75 STANDARD TOP CORNER UNIT

Unit Dim's	Bar Mark	Qnty	Size	Length	Dim 'A'	Remarks
H = 5'0 1/2"	H-1	6 ea	#4	4'8"		
W = 5'0"	V-1	4 ea	#4	2'2"		
S = 2'9"	V-2	6 ea	#5	4'8 1/2"		
SH =2'6"	S-1	4 ea	#4	3'4"		
	TB-1	4 ea	#4	4'6 1/2"	2'3 1/2"	

SPECIAL NOTES:

1. FRONT FACE OF T-WALL UNITS FINISH TREATMENT:
   - PER CONTRACT DRAWINGS AND SPECS.

GENERAL NOTES:

1. PRIMARY REFERENCE: AASHTO LRFD BRIDGE SPECIFICATIONS, 3rd EDITION, 2006 WITH INTERIM REVISIONS
2. MINIMUM CONCRETE COVER IS DESIGNED FOR 2" ON ALL BARS. TOLERANCES PER CONSTRUCTION SPECIFICATIONS SECTION 2.0 ON SHEET 2 OF 15.
3. ALL MATERIAL AND TOLERANCES IN ACCORDS TO T-WALL CONSTRUCTION SPECIFICATIONS, SECTION 2.0 MATERIALS.
4. REBAR:
   - SEE CONSTRUCTION SPECIFICATION, SECTION 2.0 MATERIALS OR PER CONTRACT DRAWINGS AND SPECS.
5. CONCRETE:
   - F'c = 4000 psi @ 28 DAYS

UNIT TYPE	H	W	S	SH	VOL	WEIGHT
3.0 x 5.0 x 2.75 STD	3'0 1/2"	5'0"	2'9"	2'6"	0.40 cy	1,611 lbs
3.5 x 5.0 x 2.75 STD	3'6 1/2"	5'0"	2'9"	2'6"	0.44 cy	1,780 lbs
4.0 x 5.0 x 2.75 STD	4'0 1/2"	5'0"	2'9"	2'6"	0.48 cy	1,948 lbs
4.5 x 5.0 x 2.75 STD	4'6 1/2"	5'0"	2'9"	2'6"	0.52 cy	2,117 lbs
5.0 x 5.0 x 2.75 STD	5'0 1/2"	5'0"	2'9"	2'6"	0.56 cy	2,286 lbs

*UNIT VOLUME AND WEIGHT BASED ON 6" THICK FRONT FACE. ARCHITECTURAL FINISHES WILL INCREASE FACE THICKNESS, VOLUME AND WEIGHT.

4/13/2017

DESIGNER

THE NEEL COMPANY
8328-D TRAFORD LANE
SPRINGFIELD, VA 22152
PH: (703) 913-7858
FX: (703) 913-7859
Web: www.neelco.com

This drawing contains information proprietary to The Neel Company. The Neel Company is the exclusive licensee of the T-WALL® patent. © 2017, The Neel Company

DATE:	03-23-17
SCALE:	NO SCALE
DESIGNED:	CAA
DRAWN:	ACS
CHECKED:	CCG/KD
TNC JOB #:	TW3634
TNC SHT #23 OF 67	

PA DOT DWG # 87-402 PE (REVISION IV)

COMMONWEALTH OF PENNSYLVANIA
DEPARTMENT OF TRANSPORTATION
BUREAU OF PROJECT DELIVERY

T-WALL® STANDARDS
PREFABRICATED T-WALL® RETAINING WALL SYSTEM

SHOP DRAWINGS
REBAR
2.75' STEM STANDARD TOP CORNER UNITS

DATE: 03-23-17 TNC JOB #: TW3634 PLOT DATE AND TIME: Wednesday, March 22, 2017 15:46:40 CAD FILE NAME: 023 Rebar - HWY Std Top Cnr 2.75 r4-0.vwx

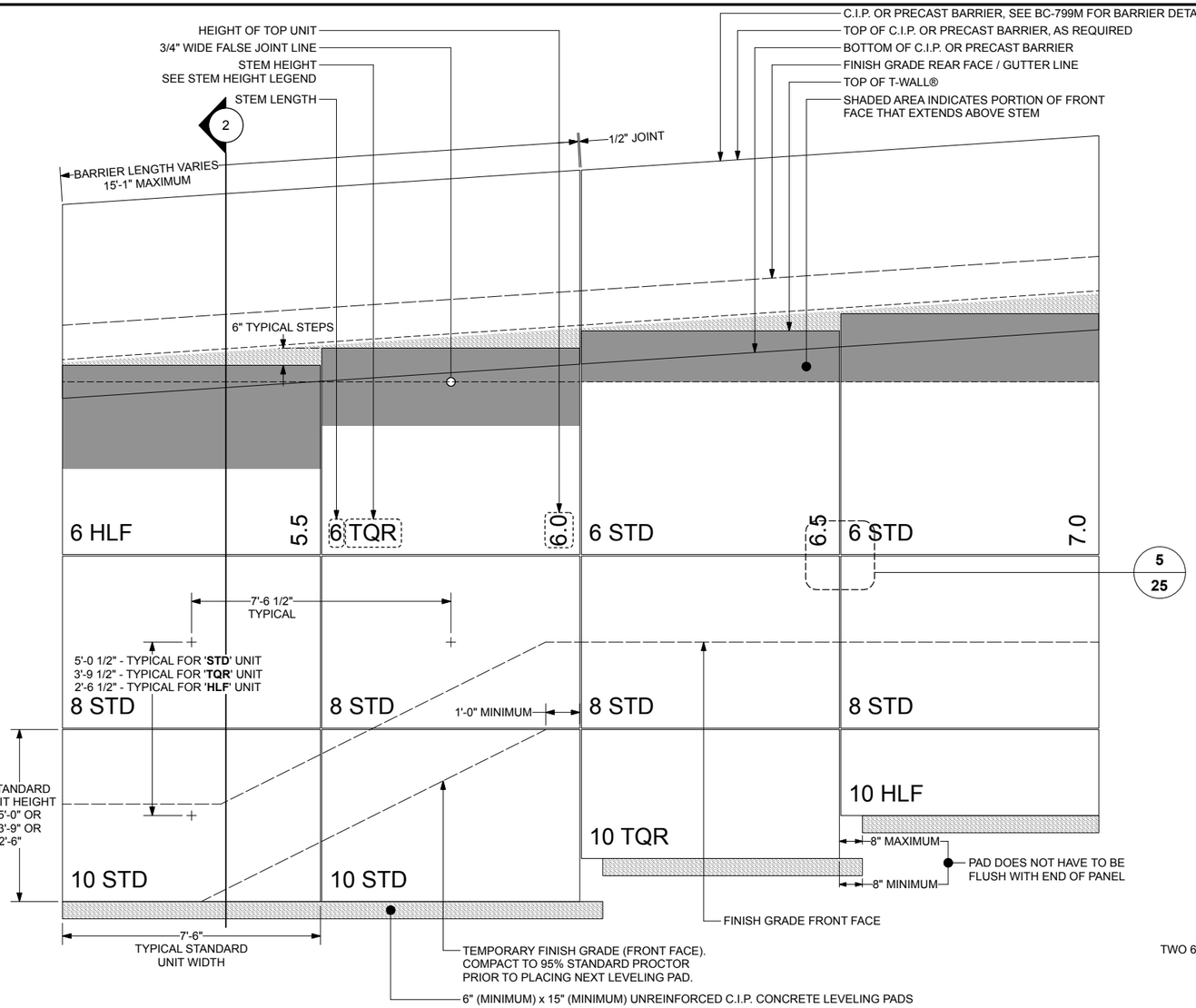

1 PARTIAL ELEVATION SHOWN - TYPICAL DETAILS

Scale: 1/2" = 1'-0"

NOT ALL DETAILS APPLY TO EACH WALL SEE "DEVELOPED ELEVATION (FRONT FACE)" FOR APPLICABLE DETAILS

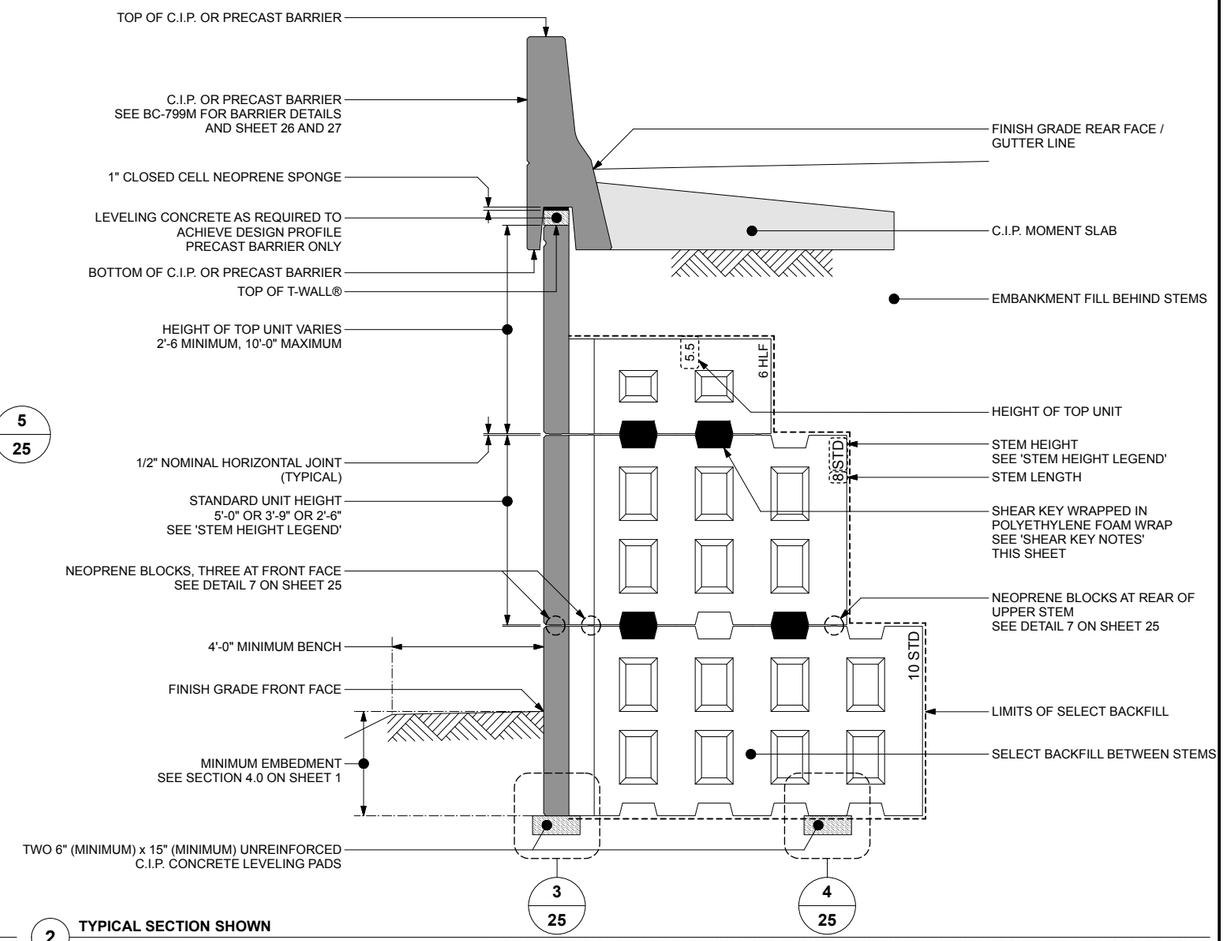

2 TYPICAL SECTION SHOWN

Scale: 1/2" = 1'-0"

NOT ALL DETAILS APPLY TO EACH WALL SEE "TYPICAL SECTION AT MAXIMUM HEIGHT" FOR APPLICABLE DETAILS

PIPE PENETRATION NOTES:

1. TYPICAL PIPE PENETRATION ARE SHOWN ON SHEET 4. LARGER PIPES WILL BE ENGINEERED ON A PROJECT SPECIFIC BASIS.
2. OUTLET PIPE JOINTS SHALL BE WATERTIGHT. OUTLET PIPES SHALL MEET 100 YEAR SERVICE LIFE CRITERIA.

STEM HEIGHT LEGEND

- STANDARD UNITS:
  - **STD** = 5'-0" STEM HEIGHT
  - **TQR** = 3'-9" STEM HEIGHT
  - **HLF** = 2'-6" STEM HEIGHT

SHEAR KEY NOTES (FOR 7.5 WIDE UNITS) :

1. TYPICAL DESIGN CONDITIONS

TYPICAL LOADS AND CONFIGURATIONS REQUIRE THE FOLLOWING SHEAR KEY QUANTITIES:

EXTENDED FACE TOP UNITS	-	2 SHEAR KEYS
6' THRU 32' STEM STANDARD UNIT	-	2 SHEAR KEYS (MINIMUM)

2. SPECIAL DESIGN CONDITION

OTHER LOADS AND CONFIGURATIONS MAY REQUIRE MORE OR LESS SHEAR KEYS. IN THESE CASES, SHEAR KEY REQUIREMENTS WILL BE EXPLICITLY DEFINED ON A PROJECT SPECIFIC BASIS.

3. LOCATION

THE LOCATION OF A SHEAR KEY ALONG THE STEM OF A T-WALL® UNIT IS NOT CRITICAL, AND DOES NOT HAVE TO BE PLACED EXACTLY AS SHOWN ON THE PROJECT DRAWINGS.

RECOMMEND PLACEMENT IS ONE SHEAR KEY AT THE FRONT (1st POCKET), ONE KEY AT THE BACK OF UNIT ABOVE AND ANY REMAINING KEYS EQUALLY SPACED BETWEEN.

DESIGNER

THE NEEL COMPANY
8328-D TRAFORD LANE
SPRINGFIELD, VA 22152
PH: (703) 913-7858
FX: (703) 913-7859
Web: www.neelco.com

This drawing contains information proprietary to The Neel Company. The Neel Company is the exclusive licensee of the T-WALL® patent. © 2017, The Neel Company

DATE:	03-23-17
SCALE:	AS NOTED
DESIGNED:	JMC
DRAWN:	CJW
CHECKED:	CCG/KD
TNC JOB #:	TW3634
TNC SHT #24 OF 67	

PA DOT DWG # 87-402 PE (REVISION IV) 4/13/2017

COMMONWEALTH OF PENNSYLVANIA
DEPARTMENT OF TRANSPORTATION
BUREAU OF PROJECT DELIVERY

T-WALL® STANDARDS
PREFABRICATED T-WALL® RETAINING WALL SYSTEM

SHOP DRAWINGS
MISCELLANEOUS DETAILS (I)
5.0 x 7.5 STANDARD UNITS

SHEET 24 OF 67

87-402 PE

DATE: 03-23-17 TNC JOB #: TW3634 PLOT DATE AND TIME: Wednesday, March 22, 2017 15:49:31 CAD FILE NAME: 024 Typ Dtls 10 RWY r4-0.wxx

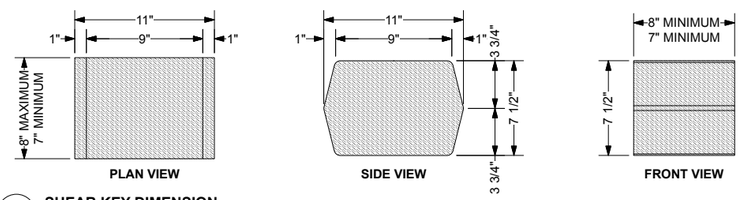

9 **SHEAR KEY DIMENSION**
Scale: 2" = 1'-0"

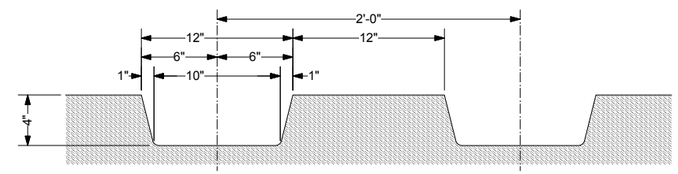

8 **SHEAR KEY BLOCK OUT DIMENSION**
Scale: 2" = 1'-0"

RUBBER BLOCKS NOTES:

1. FOUR NEOPRENE BLOCKS ARE TO BE PLACED AS SHOWN BELOW:

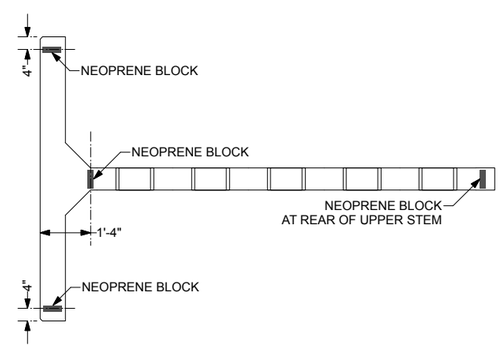

7 **NEOPRENE BLOCKS PLACEMENT (AT FRONT FACE)**
Scale: 1/2" = 1'-0"

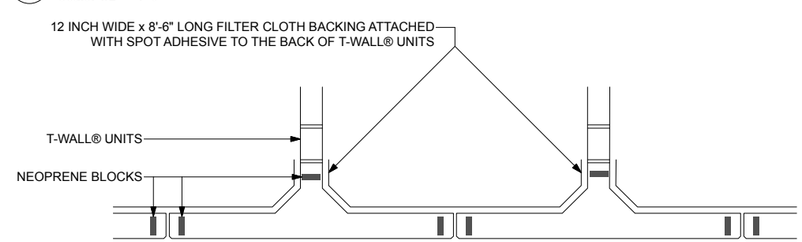

6 **HORIZONTAL FILTER CLOTH LAYOUT**
Scale: 1/2" = 1'-0"

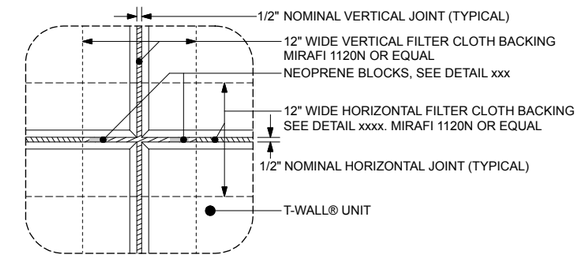

5 **HORIZONTAL AND VERTICAL JOINT**
Scale: 1 1/2" = 1'-0"

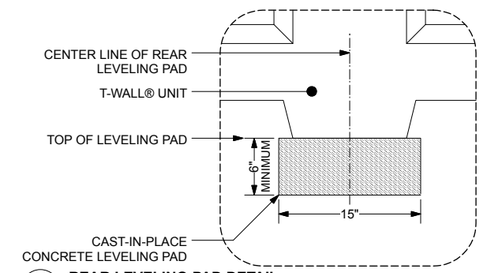

4 **REAR LEVELING PAD DETAIL**
Scale: 1 1/2" = 1'-0"

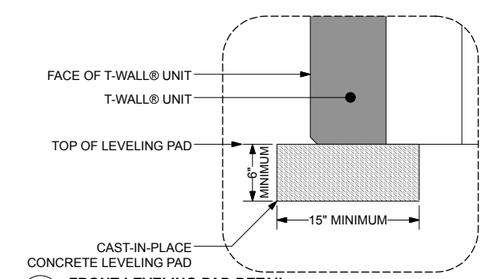

3 **FRONT LEVELING PAD DETAIL**
Scale: 1 1/2" = 1'-0"

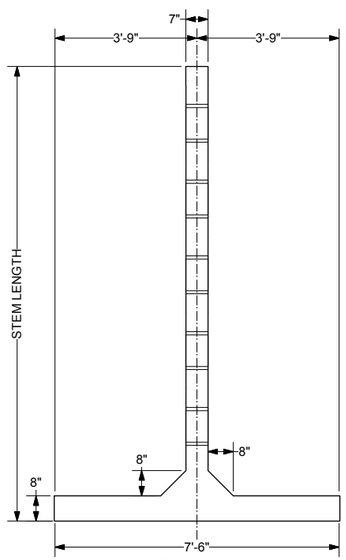

TOP VIEW

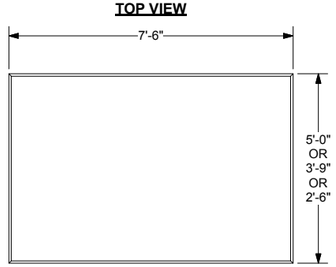

FRONT VIEW

NOTES:
- UNIT STEM LENGTHS RANGE FROM 6'-0" TO 32'-0", IN 2'-0" INCREMENTS

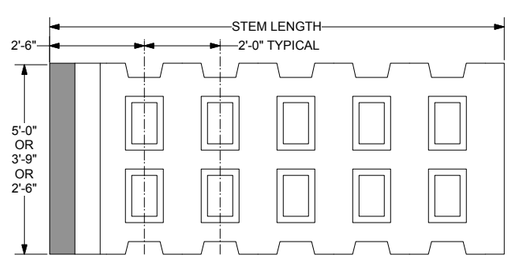

SIDE VIEW

10 **TYPICAL STANDARD T-WALL® UNIT (12'-0" STEM SHOWN)**
Scale: 1/2" = 1'-0"

4/13/2017

DESIGNER

THE NEEL COMPANY
8328-D TRAFORD LANE
SPRINGFIELD, VA 22152
PH: (703) 913-7858
FX: (703) 913-7859
Web: www.neelco.com

This drawing contains information proprietary to The Neel Company. The Neel Company is the exclusive licensee of the T-WALL® patent. © 2017, The Neel Company

DATE:	03-23-17
SCALE:	AS NOTED
DESIGNED:	JMC
DRAWN:	CJW
CHECKED:	CCG/KD
TNC JOB #:	TW3634
TNC SHT #25 OF 67	

PA DOT DWG # 87-402 PE (REVISION IV)

COMMONWEALTH OF PENNSYLVANIA
DEPARTMENT OF TRANSPORTATION
BUREAU OF PROJECT DELIVERY

T-WALL® STANDARDS
PREFABRICATED T-WALL® RETAINING WALL SYSTEM

SHOP DRAWINGS
MISCELLANEOUS DETAILS (II)
5.0 x 7.5 STANDARD UNITS

SHEET 25 OF 67

87-402 PE

DATE: 03-23-17 TNC JOB #: TW3634 PLOT DATE AND TIME: Wednesday, March 22, 2017 15:49:31 CAD FILE NAME: 024 Typ Dtls 10 RWY r4-0.wxx

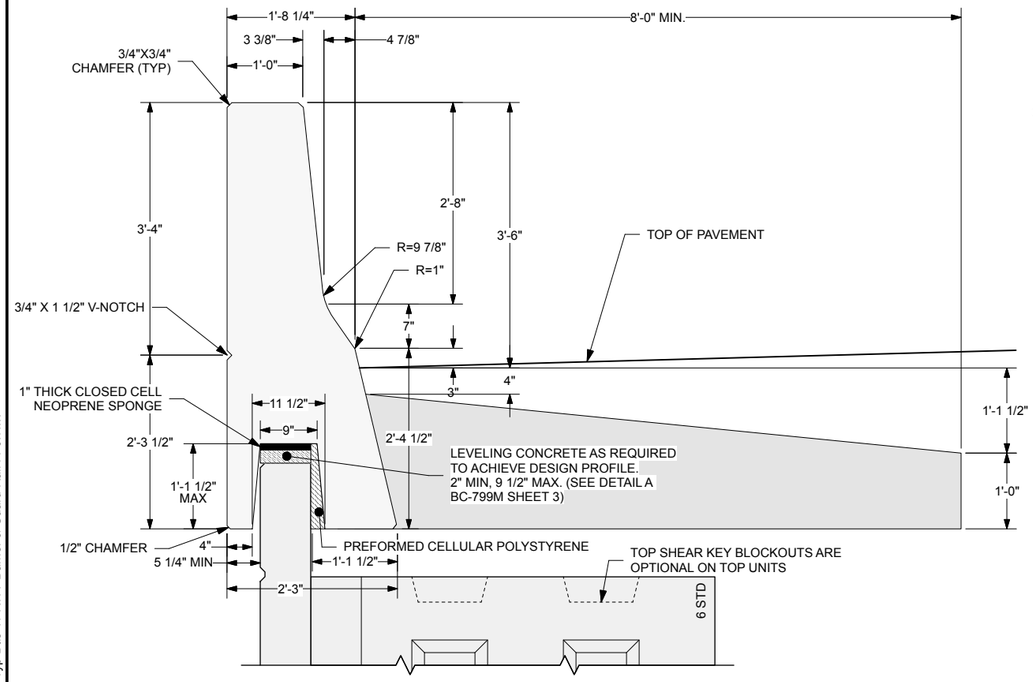

PRECAST BARRIER AND C.I.P. MOMENT SLAB MOUNTED ON T-WALL® RETAINING WALL SYSTEM

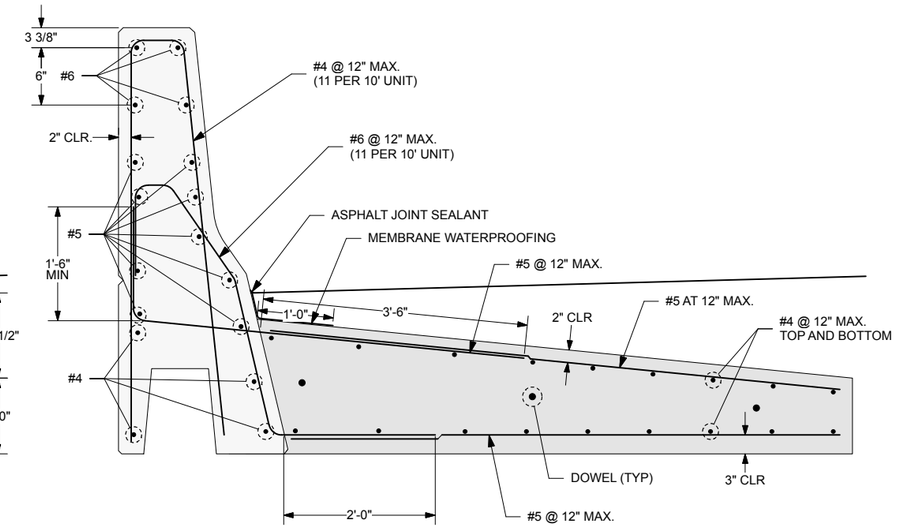

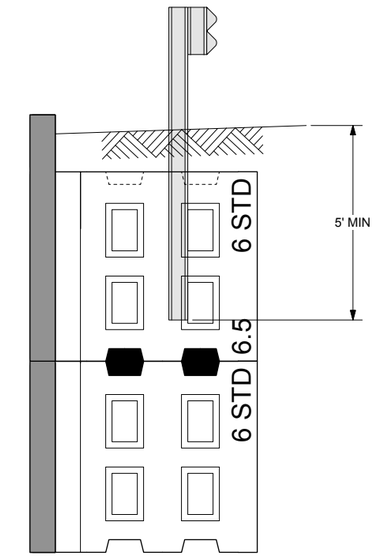

SECTION SHOWING STANDARD GUIDE RAIL

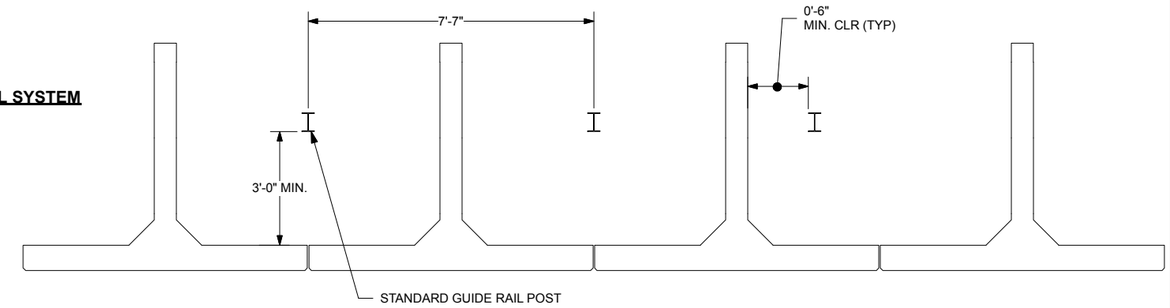

PART PLAN SHOWING STANDARD GUIDE RAIL POST SPACING

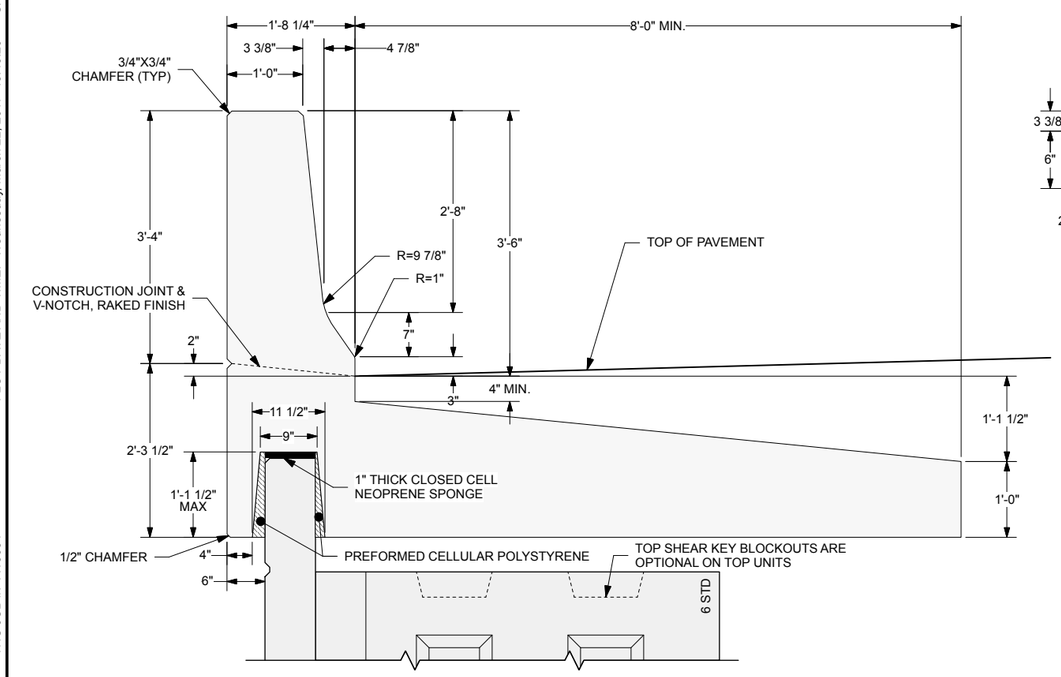

C.I.P. BARRIER AND MOMENT SLAB MOUNTED ON T-WALL® RETAINING WALL SYSTEM

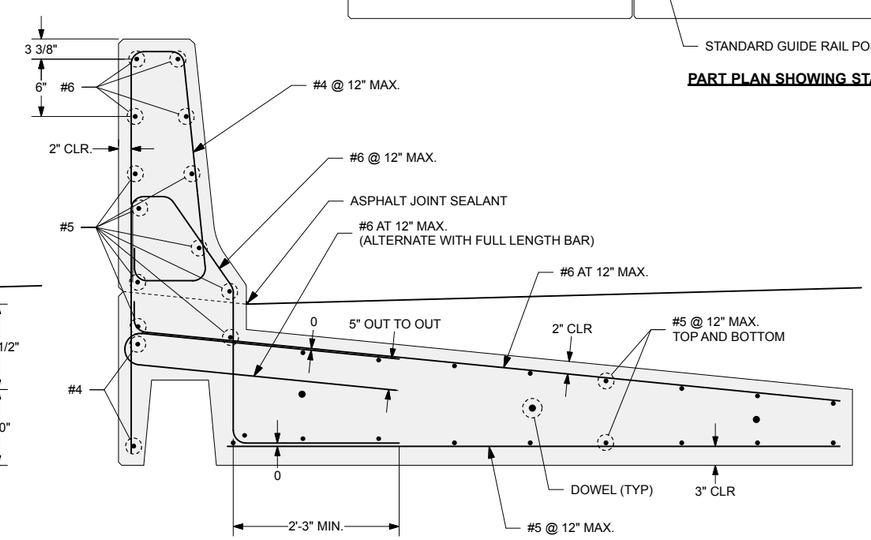

PA DOT DWG # 87-402 PE (REVISION IV) 4/13/2017

COMMONWEALTH OF PENNSYLVANIA
DEPARTMENT OF TRANSPORTATION
BUREAU OF PROJECT DELIVERY

T-WALL® STANDARDS
PREFABRICATED T-WALL® RETAINING WALL SYSTEM

SHOP DRAWINGS
TYPICAL DETAILS - 7.50 WIDE UNITS
TRAFFIC BARRIER WITH BITUMINOUS CONCRETE SHOULDER

DESIGNER

THE NEEL COMPANY
8328-D TRAFORD LANE
SPRINGFIELD, VA 22152
PH: (703) 913-7858
FX: (703) 913-7859
Web: www.neelco.com

This drawing contains information proprietary to The Neel Company. The Neel Company is the exclusive licensee of the T-WALL® patent. © 2017, The Neel Company

DATE:	03-23-17
SCALE:	NO SCALE
DESIGNED:	JMC
DRAWN:	CJW
CHECKED:	CCG/KD
TNC JOB #:	TW3634
TNC SHT #26 OF 67	

DATE: 03-23-17 TNC JOB #: TW3634 PLOT DATE AND TIME: Wednesday, March 22, 2017 15:49:20 CAD FILE NAME: 026 Typ Dtls 11 RWY Barrier & Guard Rail r4-0.vwx

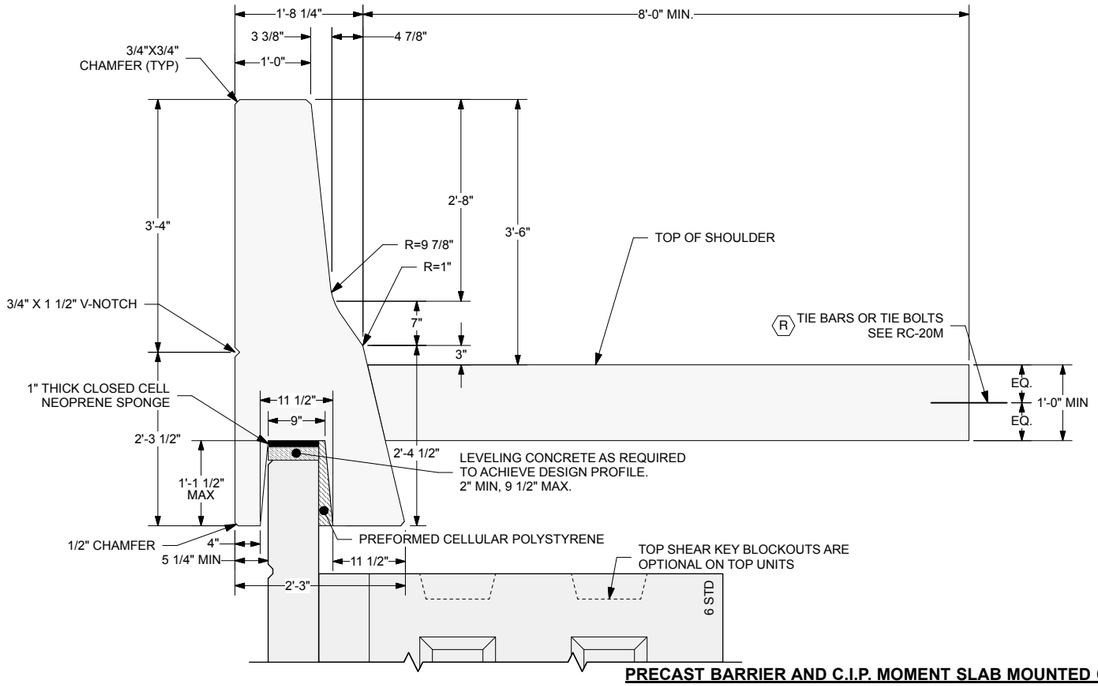

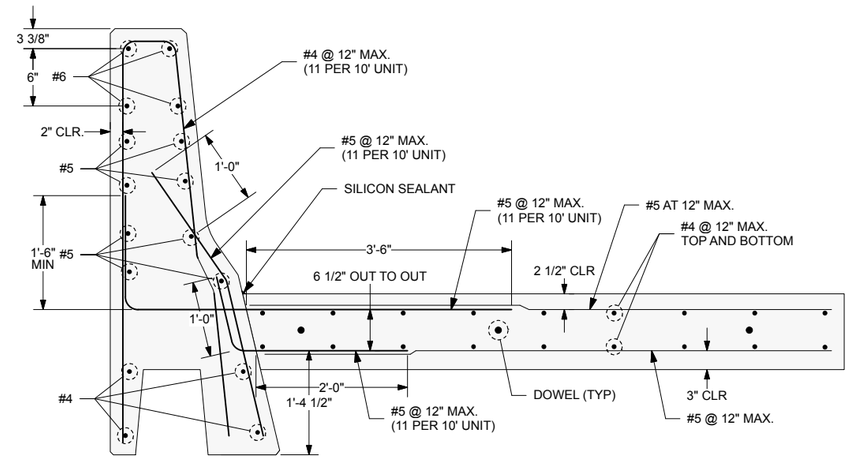

PRECAST BARRIER AND C.I.P. MOMENT SLAB MOUNTED ON T-WALL® RETAINING WALL SYSTEM

LEGEND

(R) ROADWAY ITEM

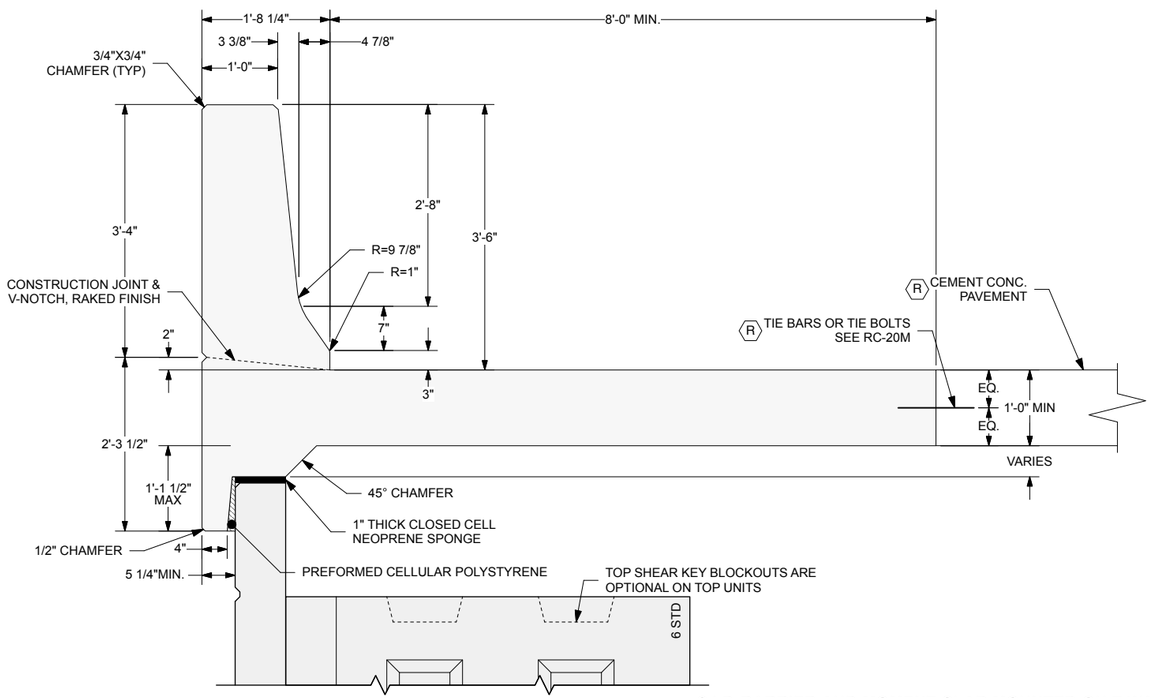

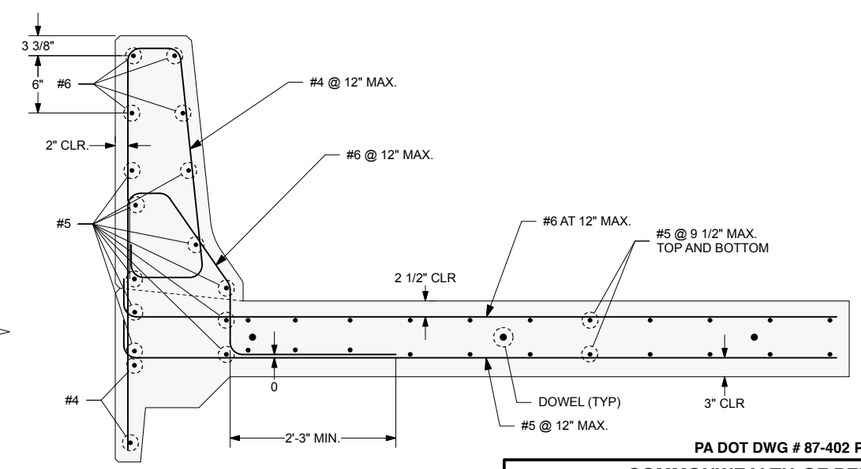

C.I.P. BARRIER AND MOMENT SLAB MOUNTED ON T-WALL® RETAINING WALL SYSTEM

PA DOT DWG # 87-402 PE (REVISION IV)

COMMONWEALTH OF PENNSYLVANIA
DEPARTMENT OF TRANSPORTATION
BUREAU OF PROJECT DELIVERY

T-WALL® STANDARDS
PREFABRICATED T-WALL® RETAINING WALL SYSTEM

SHOP DRAWINGS
TYPICAL DETAILS - 7.50 WIDE UNITS
TRAFFIC BARRIER WITH CEMENT CONCRETE SHOULDER

SHEET 27 OF 67

87-402 PE

DESIGNER

THE NEEL COMPANY
8328-D TRAFORD LANE
SPRINGFIELD, VA 22152
Ph1: (703) 913-7858
FX: (703) 913-7859
Web: www.neelco.com

This drawing contains information proprietary to The Neel Company. The Neel Company is the exclusive licensee of the T-WALL® patent. © 2017, The Neel Company

4/13/2017

DATE:	03-23-17
SCALE:	NO SCALE
DESIGNED:	JMC
DRAWN:	CJW
CHECKED:	CCG/KD
TNC JOB #:	TW3634
TNC SHT #27 OF 67	

DATE: 03-23-17 TNC JOB #: TW3634 PLOT DATE AND TIME: Wednesday, March 22, 2017 15:49:20 CAD FILE NAME: 026 Typ Dtls 11 RWY Barrier & Guard Rail r4-0.vwx

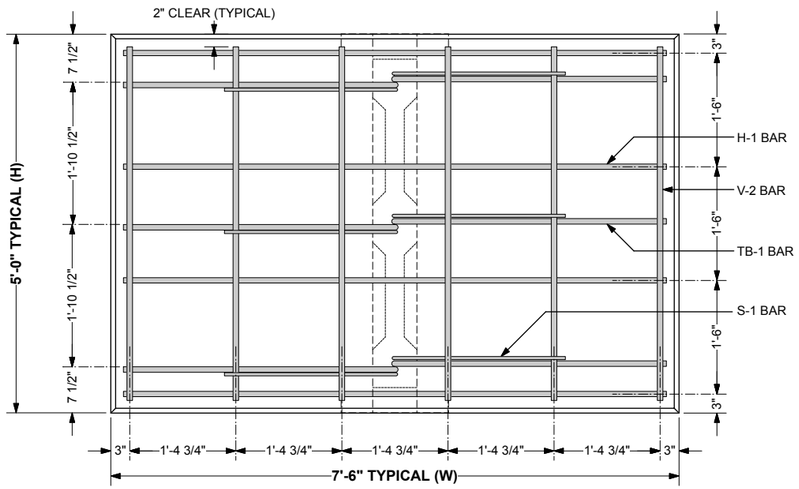

3 **FRONT VIEW - 5.0 x 7.5 STANDARD UNIT**
Scale: 1" = 1'-0"

(U-1 BARS IN STEM OMITTED FOR CLARITY)

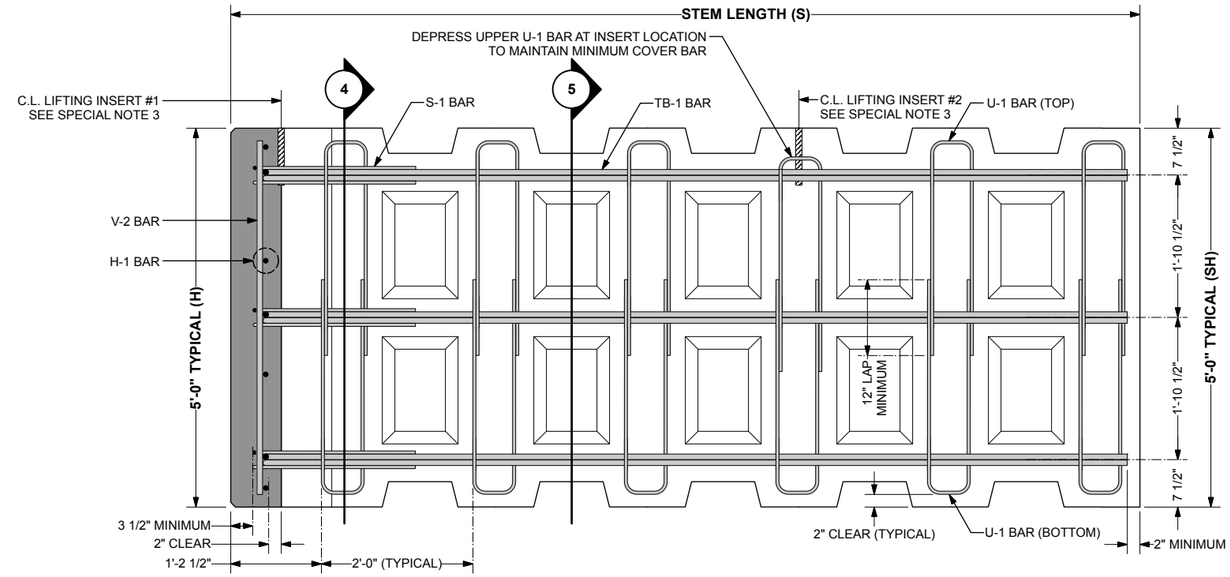

2 **SIDE VIEW - 5.0 x 7.5 STANDARD UNIT (12'-0" STEM SHOWN)**
Scale: 1" = 1'-0"

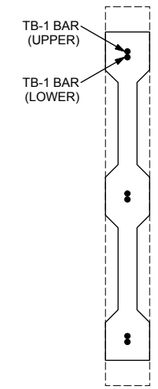

5 **SECTION THROUGH STEM**
Scale: 1" = 1'-0"

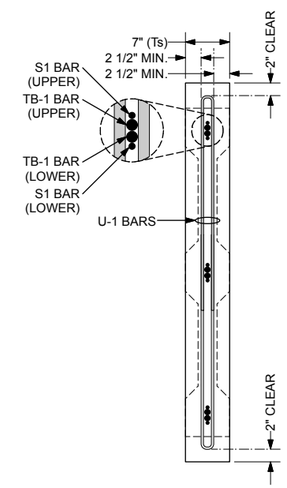

4 **SECTION THROUGH STEM**
Scale: 1" = 1'-0"

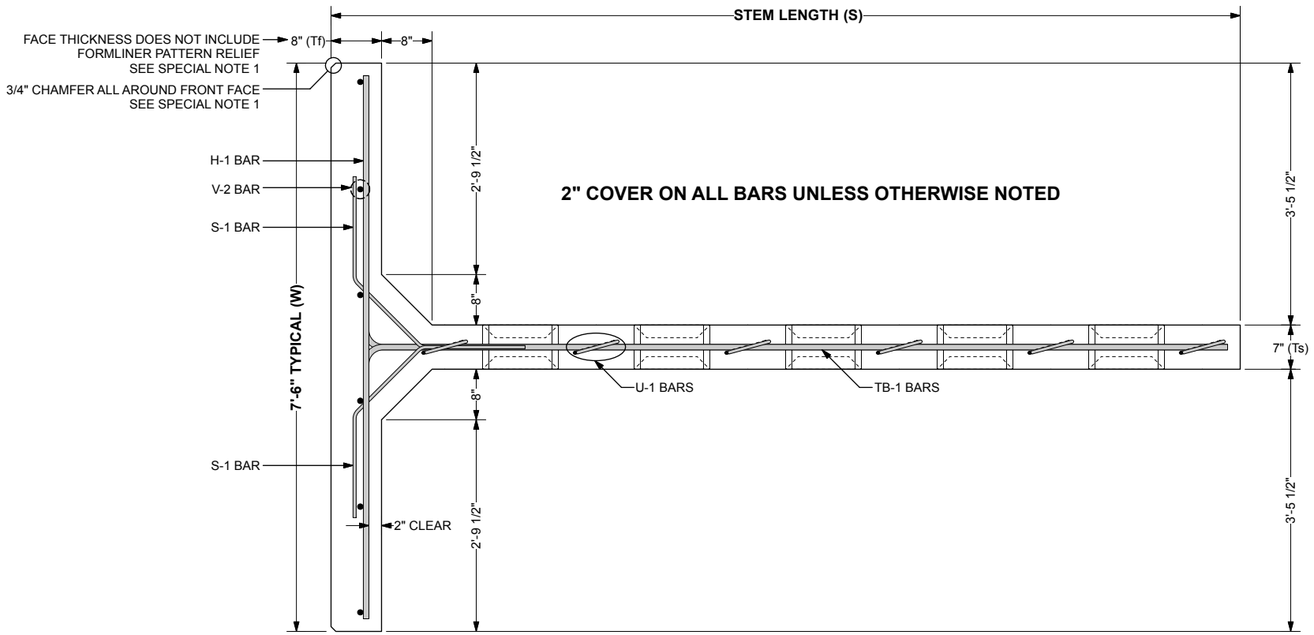

1 **PLAN VIEW - 5.0 x 7.5 STANDARD UNIT (12'-0" STEM SHOWN)**
Scale: 1" = 1'-0"

SPECIAL NOTES:

1. FRONT FACE OF T-WALL® UNITS FINISH TREATMENT:
   - PER CONTRACT DRAWINGS AND SPECS.
   - MINIMUM FRONT FACE THICKNESS SHALL BE 8"
2. TOP & BOTTOM SHEAR KEY BLOCKOUTS MAY BE LEFT OUT IN AN ALTERNATING PATTERN WHEN STEM LENGTHS BECOME LONGER THAN 12 FT (SPACED AT 2'-0"). ALL BLOCKOUTS ARE REQUIRED IN THE STEM FOR THE FIRST 12 FT OF LENGTH. REGARDLESS OF OVERALL LENGTH.
3. LIFTING INSERTS:
   - MEADOW BURKE RAPID LIFT RL-22 LIFTING INSERT WITH RL-32 REBAR OR DAYTON SUPERIOR P-53 5-TON SWIFT LIFT EYE WITH P-60 TENSION BAR.
   - 8000 LBS (4 TONS) MINIMUM RATED WORKING LOAD CAPACITY.
   - REFER TO LIFTING INSERT DATA TABLE FOR INSERT LOCATIONS.
   - LIFTING INSERTS TO BE GALVANIZED.

GENERAL NOTES:

1. PRIMARY REFERENCE: AASHTO LRFD BRIDGE SPECIFICATIONS, 5th EDITION, 2010 WITH INTERIM REVISIONS
2. MINIMUM CONCRETE COVER IS DESIGNED FOR 2" ON ALL BARS. TOLERANCES PER CONSTRUCTION SPECIFICATIONS SECTION 2.0.
3. ALL MATERIAL AND TOLERANCES IN ACCORDS TO T-WALL® CONSTRUCTION SPECIFICATIONS, SECTION 2.0 MATERIALS.
4. REBAR:
   - SEE CONSTRUCTION SPECIFICATION, SECTION 2.0 MATERIALS OR PER CONTRACT DRAWINGS AND SPECS.
5. CONCRETE:
   - F'c = 5000 psi @ 28 DAYS

4/13/2017

DESIGNER

THE NEEL COMPANY
8328-D TRAFORD LANE
SPRINGFIELD, VA 22152
PH: (703) 913-7858
FX: (703) 913-7859
Web: www.neelco.com

This drawing contains information proprietary to The Neel Company. The Neel Company is the exclusive licensee of the T-WALL® patent. ©2017, The Neel Company

DATE:	03-23-17
SCALE:	AS NOTED
DESIGNED:	JMC
DRAWN:	CJW
CHECKED:	CCG/KD
TNC JOB #:	TW3634
TNC SHT #28 OF 67	

PA DOT DWG # 87-402 PE (REVISION IV)

COMMONWEALTH OF PENNSYLVANIA
DEPARTMENT OF TRANSPORTATION
BUREAU OF PROJECT DELIVERY

T-WALL® STANDARDS
PREFABRICATED T-WALL® RETAINING WALL SYSTEM

SHOP DRAWINGS
REBAR
5.0x7.5 STANDARD UNIT (I)

SHEET 28 OF 67

87-402 PE

DATE: 03-23-17 TNC JOB #: TW3634 PLOT DATE AND TIME: Wednesday, March 22, 2017 15:49:12 CAD FILE NAME: 028 Rebar - RWY Std r4-0.wxx

T-WALL UNIT PROPERTIES

UNIT TYPE	H	W	S	Tf*	SH	VOLUME*	WEIGHT*
5.0x7.5x06 Std	5'0"	7'6"	6'0"	8"	5'0"	1.51 cy	6,097 lbs
5.0x7.5x08 Std	5'0"	7'6"	8'0"	8"	5'0"	1.68 cy	6,811 lbs
5.0x7.5x10 Std	5'0"	7'6"	10'0"	8"	5'0"	1.86 cy	7,526 lbs
5.0x7.5x12 Std	5'0"	7'6"	12'0"	8"	5'0"	2.03 cy	8,241 lbs
5.0x7.5x14 Std	5'0"	7'6"	14'0"	8"	5'0"	2.21 cy	8,956 lbs
5.0x7.5x16 Std	5'0"	7'6"	16'0"	8"	5'0"	2.39 cy	9,671 lbs
5.0x7.5x18 Std	5'0"	7'6"	18'0"	8"	5'0"	2.56 cy	10,386 lbs
5.0x7.5x20 Std	5'0"	7'6"	20'0"	8"	5'0"	2.74 cy	11,101 lbs
5.0x7.5x22 Std	5'0"	7'6"	22'0"	8"	5'0"	2.92 cy	11,816 lbs
5.0x7.5x24 Std	5'0"	7'6"	24'0"	8"	5'0"	3.09 cy	12,531 lbs
5.0x7.5x26 Std	5'0"	7'6"	26'0"	8"	5'0"	3.27 cy	13,246 lbs
5.0x7.5x28 Std	5'0"	7'6"	28'0"	8"	5'0"	3.45 cy	13,961 lbs
5.0x7.5x30 Std	5'0"	7'6"	30'0"	8"	5'0"	3.62 cy	14,676 lbs
5.0x7.5x32 Std	5'0"	7'6"	32'0"	8"	5'0"	3.80 cy	15,390 lbs

*** VOLUMES AND WEIGHTS ON THIS TABLE ARE BASED ON 8" FACE THICKNESS (Tf)**
FORMLINER FINISHES MAY INCREASE FACE THICKNESS, VOLUME AND WEIGHT.

LIFTING INSERT DATA

UNIT TYPE	DISTANCE TO CENTROID FROM FRONT FACE	DISTANCE TO INSERT #1 FROM FRONT FACE	DISTANCE TO INSERT #2 FROM FRONT FACE
5.0x7.5x06 Std	1'4"	8"	3'6"
5.0x7.5x08 Std	1'11 1/4"	8"	3'6"
5.0x7.5x10 Std	2'7 3/8"	8"	5'6"
5.0x7.5x12 Std	3'4 1/8"	8"	7'6"
5.0x7.5x14 Std	4'1 1/2"	8"	7'6"
5.0x7.5x16 Std	4'11 1/4"	8"	9'6"
5.0x7.5x18 Std	5'9 1/4"	8"	11'6"
5.0x7.5x20 Std	6'7 1/2"	8"	13'6"
5.0x7.5x22 Std	7'6"	8"	15'6"
5.0x7.5x24 Std	8'4 5/8"	8"	17'6"
5.0x7.5x26 Std	9'3 1/2"	8"	19'6"
5.0x7.5x28 Std	10'2 3/8"	8"	19'6"
5.0x7.5x30 Std	11'1 1/2"	8"	21'6"
5.0x7.5x32 Std	12'0 5/8"	8"	23'6"

REBAR SCHEDULES

5.0x7.5x06 Std — **HIGHWAY REBAR**

Unit Dims	Bar Mark	Qnty	Size	Length	Dim "A"	Bar Weight	Remarks
H=5'0"	H-1	4 ea	#4	7'2"		19.15 lbs	
W=7'6"	U-1	6 ea	#3	6'3"		14.10 lbs	
S=6'0"	V-2	6 ea	#4	4'8"		18.70 lbs	
SH=5'0"	S-1	6 ea	#4	4'0 1/4"		16.12 lbs	
	TB-1	6 ea	#4	9'0 1/4"	5'4 3/4"	36.16 lbs	
						104.22 lbs	

5.0x7.5x08 Std — **HIGHWAY REBAR**

Unit Dims	Bar Mark	Qnty	Size	Length	Dim "A"	Bar Weight	Remarks
H=5'0"	H-1	4 ea	#4	7'2"		19.15 lbs	
W=7'6"	U-1	8 ea	#3	6'3"		18.80 lbs	
S=8'0"	V-2	6 ea	#4	4'8"		18.70 lbs	
SH=5'0"	S-1	6 ea	#4	4'0 1/4"		16.12 lbs	
	TB-1	6 ea	#4	11'0 1/4"	7'4 3/4"	44.17 lbs	
						116.94 lbs	

5.0x7.5x10 Std — **HIGHWAY REBAR**

Unit Dims	Bar Mark	Qnty	Size	Length	Dim "A"	Bar Weight	Remarks
H=5'0"	H-1	4 ea	#4	7'2"		19.15 lbs	
W=7'6"	U-1	10 ea	#3	6'3"		23.50 lbs	
S=10'0"	V-2	6 ea	#4	4'8"		18.70 lbs	
SH=5'0"	S-1	6 ea	#4	4'0 1/4"		16.12 lbs	
	TB-1	6 ea	#4	13'0 1/4"	9'4 3/4"	52.19 lbs	
						129.66 lbs	

5.0x7.5x12 Std — **HIGHWAY REBAR**

Unit Dims	Bar Mark	Qnty	Size	Length	Dim "A"	Bar Weight	Remarks
H=5'0"	H-1	4 ea	#4	7'2"		19.15 lbs	
W=7'6"	U-1	12 ea	#3	6'3"		28.20 lbs	
S=12'0"	V-2	6 ea	#4	4'8"		18.70 lbs	
SH=5'0"	S-1	6 ea	#4	4'0 1/4"		16.12 lbs	
	TB-1	6 ea	#4	15'0 1/4"	11'4 3/4"	60.20 lbs	
						142.37 lbs	

5.0x7.5x14 Std — **HIGHWAY REBAR**

Unit Dims	Bar Mark	Qnty	Size	Length	Dim "A"	Bar Weight	Remarks
H=5'0"	H-1	4 ea	#5	7'2"		29.90 lbs	
W=7'6"	U-1	14 ea	#3	6'3"		32.90 lbs	
S=14'0"	V-2	6 ea	#4	4'8"		18.70 lbs	
SH=5'0"	S-1	6 ea	#4	4'0 1/4"		16.12 lbs	
	TB-1	6 ea	#5	17'0 1/4"	13'4 3/4"	106.52 lbs	
						204.14 lbs	

5.0x7.5x16 Std — **HIGHWAY REBAR**

Unit Dims	Bar Mark	Qnty	Size	Length	Dim "A"	Bar Weight	Remarks
H=5'0"	H-1	4 ea	#5	7'2"		29.90 lbs	
W=7'6"	U-1	16 ea	#3	6'3"		37.60 lbs	
S=16'0"	V-2	6 ea	#4	4'8"		18.70 lbs	
SH=5'0"	S-1	6 ea	#4	4'0 1/4"		16.12 lbs	
	TB-1	6 ea	#5	19'0 1/4"	15'4 3/4"	119.03 lbs	
						221.35 lbs	

5.0x7.5x18 Std — **HIGHWAY REBAR**

Unit Dims	Bar Mark	Qnty	Size	Length	Dim "A"	Bar Weight	Remarks
H=5'0"	H-1	4 ea	#5	7'2"		29.90 lbs	
W=7'6"	U-1	18 ea	#3	6'3"		42.30 lbs	
S=18'0"	V-2	6 ea	#4	4'8"		18.70 lbs	
SH=5'0"	S-1	6 ea	#4	4'0 1/4"		16.12 lbs	
	TB-1	6 ea	#5	21'0 1/4"	17'4 3/4"	131.55 lbs	
						238.57 lbs	

REBAR SCHEDULES

5.0x7.5x20 Std — **HIGHWAY REBAR**

Unit Dims	Bar Mark	Qnty	Size	Length	Dim "A"	Bar Weight	Remarks
H=5'0"	H-1	4 ea	#6	7'2"		43.06 lbs	
W=7'6"	U-1	20 ea	#3	6'3"		47.00 lbs	
S=20'0"	V-2	6 ea	#4	4'8"		18.70 lbs	
SH=5'0"	S-1	6 ea	#4	4'0 1/4"		16.12 lbs	
	TB-1	6 ea	#5	23'0 1/4"	19'4 3/4"	144.06 lbs	
						268.94 lbs	

5.0x7.5x22 Std — **HIGHWAY REBAR**

Unit Dims	Bar Mark	Qnty	Size	Length	Dim "A"	Bar Weight	Remarks
H=5'0"	H-1	4 ea	#6	7'2"		43.06 lbs	
W=7'6"	U-1	22 ea	#3	6'3"		51.70 lbs	
S=22'0"	V-2	6 ea	#4	4'8"		18.70 lbs	
SH=5'0"	S-1	6 ea	#4	4'0 1/4"		16.12 lbs	
	TB-1	6 ea	#5	25'0 1/4"	21'4 3/4"	156.58 lbs	
						286.16 lbs	

5.0x7.5x24 Std — **HIGHWAY REBAR**

Unit Dims	Bar Mark	Qnty	Size	Length	Dim "A"	Bar Weight	Remarks
H=5'0"	H-1	4 ea	#6	7'2"		43.06 lbs	
W=7'6"	U-1	24 ea	#3	6'3"		56.40 lbs	
S=24'0"	V-2	6 ea	#4	4'8"		18.70 lbs	
SH=5'0"	S-1	6 ea	#4	4'0 1/4"		16.12 lbs	
	TB-1	6 ea	#5	27'0 1/4"	23'4 3/4"	169.10 lbs	
						303.37 lbs	

5.0x7.5x26 Std — **HIGHWAY REBAR**

Unit Dims	Bar Mark	Qnty	Size	Length	Dim "A"	Bar Weight	Remarks
H=5'0"	H-1	4 ea	#7	7'2"		58.59 lbs	
W=7'6"	U-1	26 ea	#3	6'3"		61.10 lbs	
S=26'0"	V-2	6 ea	#4	4'8"		18.70 lbs	
SH=5'0"	S-1	6 ea	#4	4'0 1/4"		16.12 lbs	
	TB-1	6 ea	#6	29'0 1/4"	25'4 3/4"	261.54 lbs	
						416.05 lbs	

5.0x7.5x28 Std — **HIGHWAY REBAR**

Unit Dims	Bar Mark	Qnty	Size	Length	Dim "A"	Bar Weight	Remarks
H=5'0"	H-1	4 ea	#7	7'2"		58.59 lbs	
W=7'6"	U-1	28 ea	#3	6'3"		65.80 lbs	
S=28'0"	V-2	6 ea	#4	4'8"		18.70 lbs	
SH=5'0"	S-1	6 ea	#4	4'0 1/4"		16.12 lbs	
	TB-1	6 ea	#6	31'0 1/4"	27'4 3/4"	279.56 lbs	
						438.77 lbs	

5.0x7.5x30 Std — **HIGHWAY REBAR**

Unit Dims	Bar Mark	Qnty	Size	Length	Dim "A"	Bar Weight	Remarks
H=5'0"	H-1	4 ea	#7	7'2"		58.59 lbs	
W=7'6"	U-1	30 ea	#3	6'3"		70.50 lbs	
S=30'0"	V-2	6 ea	#4	4'8"		18.70 lbs	
SH=5'0"	S-1	6 ea	#4	4'0 1/4"		16.12 lbs	
	TB-1	6 ea	#6	33'0 1/4"	29'4 3/4"	297.58 lbs	
						461.50 lbs	

5.0x7.5x32 Std — **HIGHWAY REBAR**

Unit Dims	Bar Mark	Qnty	Size	Length	Dim "A"	Bar Weight	Remarks
H=5'0"	H-1	4 ea	#7	7'2"		58.59 lbs	
W=7'6"	U-1	32 ea	#3	6'3"		75.20 lbs	
S=32'0"	V-2	6 ea	#4	4'8"		18.70 lbs	
SH=5'0"	S-1	6 ea	#4	4'0 1/4"		16.12 lbs	
	TB-1	6 ea	#6	35'0 1/4"	31'4 3/4"	315.61 lbs	
						484.22 lbs	

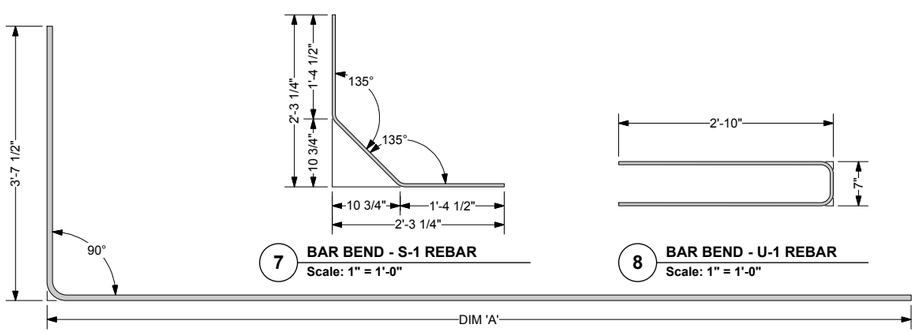

6 **BAR BEND - TB-1 REBAR**
Scale: 1" = 1'-0"

7 **BAR BEND - S-1 REBAR**
Scale: 1" = 1'-0"

8 **BAR BEND - U-1 REBAR**
Scale: 1" = 1'-0"

4/13/2017

DESIGNER

THE NEEL COMPANY
8328-D TRAFORD LANE
SPRINGFIELD, VA 22152
PH: (703) 913-7858
FX: (703) 913-7859
Web: www.neelco.com

This drawing contains information proprietary to The Neel Company. The Neel Company is the exclusive licensee of the T-WALL® patent. ©2017, The Neel Company

DATE:	03-23-17
SCALE:	AS NOTED
DESIGNED:	JMC
DRAWN:	CJW
CHECKED:	CCG/KD
TNC JOB #:	TW3634
TNC SHT #29 OF 67	

PA DOT DWG # 87-402 PE (REVISION IV)

COMMONWEALTH OF PENNSYLVANIA
DEPARTMENT OF TRANSPORTATION
BUREAU OF PROJECT DELIVERY

T-WALL® STANDARDS
PREFABRICATED T-WALL® RETAINING WALL SYSTEM

SHOP DRAWINGS
REBAR
5.0x7.5 STANDARD UNIT (II)

SHEET 29 OF 67

87-402 PE

DATE: 03-23-17 TNC JOB #: TW3634 PLOT DATE AND TIME: Wednesday, March 22, 2017 15:49:12 CAD FILE NAME: 028 Rebar - RWY Std r4-0.wxx

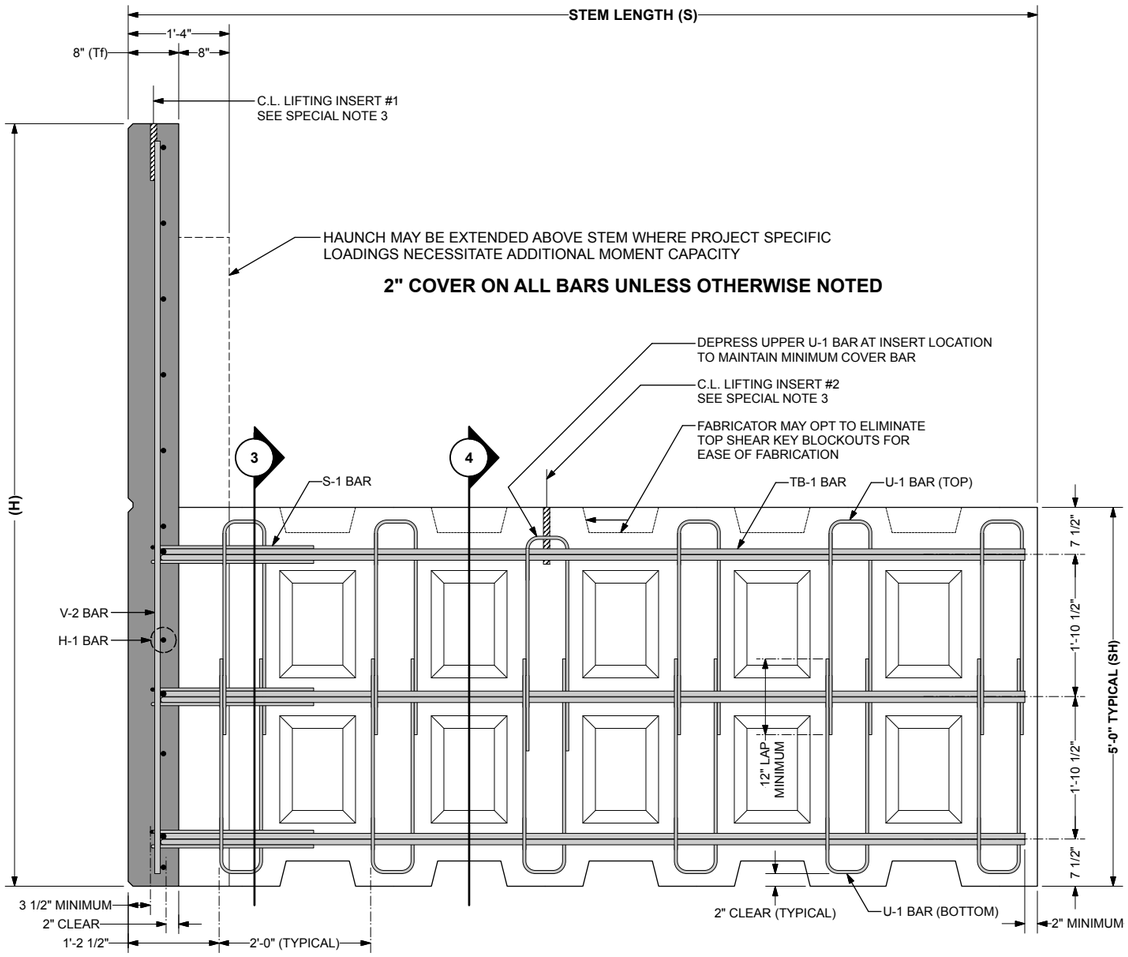

1 **SIDE VIEW - STANDARD TOP UNITS (10.0 x 7.5 x 12 Std Top SHOWN)**
Scale: 1" = 1'-0"

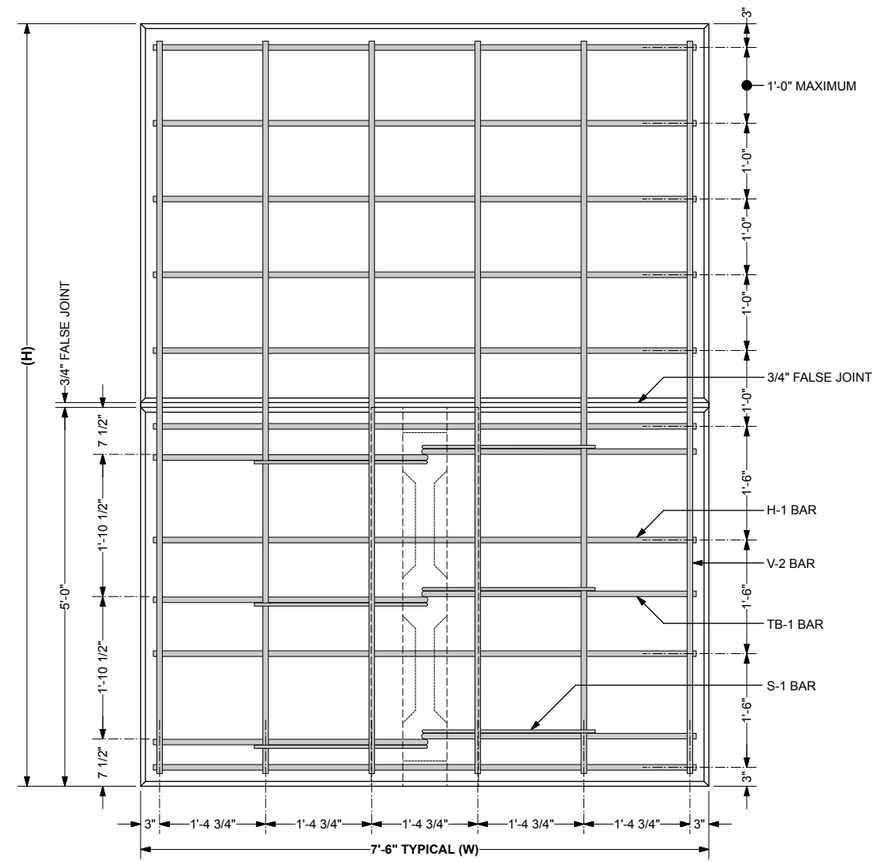

2 **FRONT VIEW - STANDARD TOP UNITS (10.0 x 7.5 x 12 Std Top SHOWN)**
Scale: 1" = 1'-0"
(U-1 BARS IN STEM OMITTED FOR CLARITY)

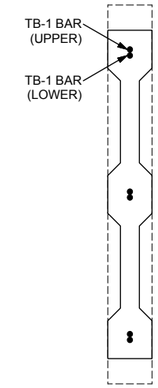

4 **SECTION THROUGH STEM**
Scale: 1" = 1'-0"

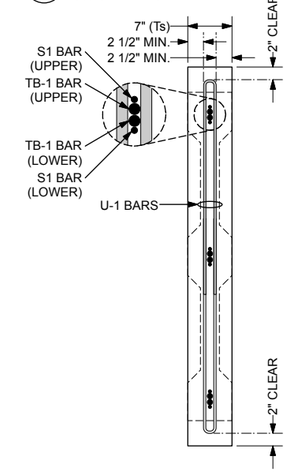

3 **SECTION THROUGH STEM**
Scale: 1" = 1'-0"

PA DOT DWG # 87-402 PE (REVISION IV)

COMMONWEALTH OF PENNSYLVANIA
DEPARTMENT OF TRANSPORTATION
BUREAU OF PROJECT DELIVERY

T-WALL® STANDARDS
PREFABRICATED T-WALL® RETAINING WALL SYSTEM

SHOP DRAWINGS
REBAR
7.50' WIDE STANDARD TOP UNIT (I)

4/13/2017

DESIGNER

THE NEEL COMPANY
8328-D TRAFORD LANE
SPRINGFIELD, VA 22152
PH: (703) 913-7858
FX: (703) 913-7859
Web: www.neelco.com

This drawing contains information proprietary to The Neel Company. The Neel Company is the exclusive licensee of the T-WALL® patent. ©2017, The Neel Company

DATE:	03-23-17
SCALE:	AS NOTED
DESIGNED:	JMC
DRAWN:	CJW
CHECKED:	CCG/KD
TNC JOB #:	TW3634
TNC SHT #30 OF 67	

SHEET 30 OF 67

87-402 PE

DATE: 03-23-17 TNC JOB #: TW3634 PLOT DATE AND TIME: Wednesday, March 22, 2017 15:49:05 CAD FILE NAME: 030 Rebar - RWY Std Top r4-0.wx

SPECIAL NOTES:

1. FRONT FACE OF T-WALL® UNITS FINISH TREATMENT:
   - PER CONTRACT DRAWINGS AND SPECS.
   - MINIMUM FRONT FACE THICKNESS SHALL BE 8"
2. TOP & BOTTOM SHEAR KEY BLOCKOUTS MAY BE LEFT OUT IN AN ALTERNATING PATTERN WHEN STEM LENGTHS BECOME LONGER THAN 12 FT (SPACED AT 2'-0"). ALL BLOCKOUTS ARE REQUIRED IN THE STEM FOR THE FIRST 12 FT OF LENGTH. REGARDLESS OF OVERALL LENGTH.
3. LIFTING INSERTS:
   - MEADOW BURKE RAPID LIFT RL-22 LIFTING INSERT WITH RL-32 REBAR OR DAYTON SUPERIOR P-53 5-TON SWIFT LIFT EYE WITH P-60 TENSION BAR.
   - 8000 LBS (4 TONS) MINIMUM RATED WORKING LOAD CAPACITY.
   - REFER TO LIFTING INSERT DATA TABLE FOR INSERT LOCATIONS.
   - LIFTING INSERTS TO BE GALVANIZED.

GENERAL NOTES:

1. PRIMARY REFERENCE: AASHTO LRFD BRIDGE SPECIFICATIONS, 5th EDITION, 2010 WITH INTERIM REVISIONS
2. MINIMUM CONCRETE COVER IS DESIGNED FOR 2" ON ALL BARS. TOLERANCES PER CONSTRUCTION SPECIFICATIONS SECTION 2.0.
3. ALL MATERIAL AND TOLERANCES IN ACCORDS TO T-WALL® CONSTRUCTION SPECIFICATIONS, SECTION 2.0 MATERIALS.
4. REBAR:
   - SEE CONSTRUCTION SPECIFICATION, SECTION 2.0 MATERIALS OR PER CONTRACT DRAWINGS AND SPECS.
5. CONCRETE:
   - F'c = 5000 psi @ 28 DAYS

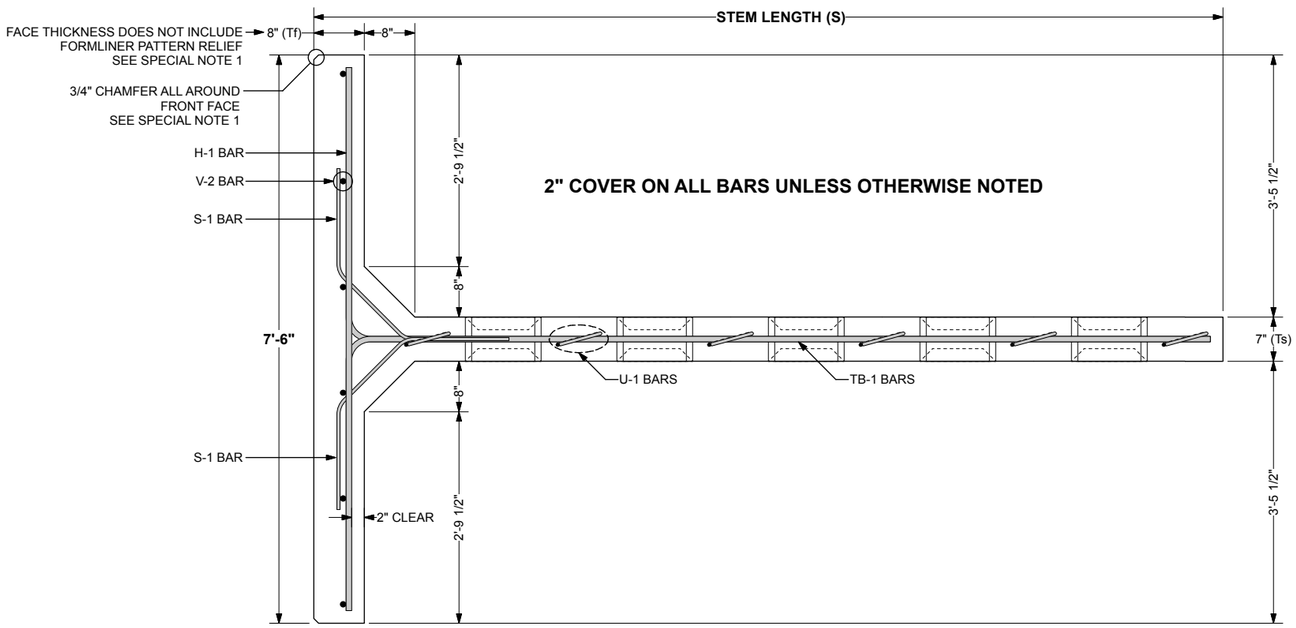

5 PLAN VIEW AT STEM - STANDARD TOP UNIT (12'-0" STEM SHOWN)
Scale: 1" = 1'-0"

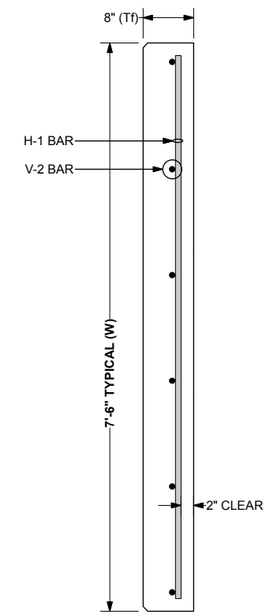

6 PLAN VIEW - EXTENDED FACE PANEL
Scale: 1" = 1'-0"

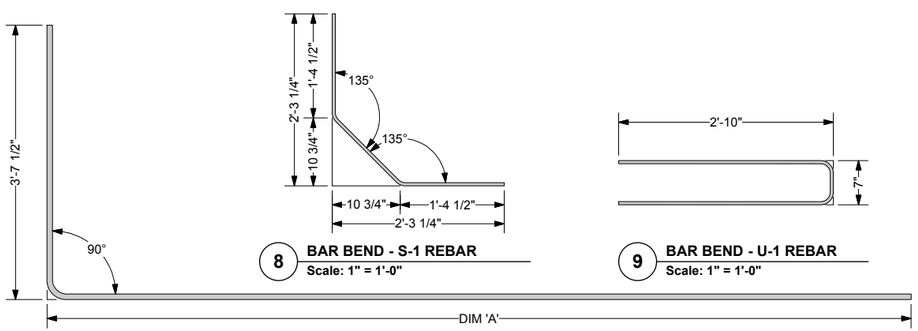

7 BAR BEND - TB-1 REBAR
Scale: 1" = 1'-0"

8 BAR BEND - S-1 REBAR
Scale: 1" = 1'-0"

9 BAR BEND - U-1 REBAR
Scale: 1" = 1'-0"

4/13/2017

DESIGNER	
THE NEEL COMPANY 8328-D TRAFORD LANE SPRINGFIELD, VA 22152 PH: (703) 913-7858 FX: (703) 913-7859 Web: www.neelco.com	DATE: 03-23-17
	SCALE: AS NOTED
	DESIGNED: JMC
	DRAWN: CJW
	CHECKED: CCG/KD
	TNC JOB #: TW3634
	TNC SHT #31 OF 67

This drawing contains information proprietary to The Neel Company. The Neel Company is the exclusive licensee of the T-WALL® patent. ©2017, The Neel Company

PA DOT DWG # 87-402 PE (REVISION IV)

COMMONWEALTH OF PENNSYLVANIA
DEPARTMENT OF TRANSPORTATION
BUREAU OF PROJECT DELIVERY

T-WALL® STANDARDS
PREFABRICATED T-WALL® RETAINING WALL SYSTEM

SHOP DRAWINGS
REBAR
7.50' WIDE STANDARD TOP UNIT (II)

SHEET 31 OF 67

87-402 PE

DATE: 03-23-17 TNC JOB #: TW3634 PLOT DATE AND TIME: Wednesday, March 22, 2017 15:49:05 CAD FILE NAME: 030 Rebar - RWY Std Top r4-0.wx

REBAR SCHEDULES

5.5x7.5x06 Std Top — **HIGHWAY REBAR**

Unit Dims	Bar Mark	Qnty	Size	Length	Dim "A"	Bar Weight	Remarks
H=5'6"	H-1	5 ea	#4	7'2"		23.94 lbs	
W=7'6"	U-1	6 ea	#3	6'3"		14.10 lbs	
S=6'0"	V-2	6 ea	#5	5'2"		32.33 lbs	
SH=5'0"	S-1	6 ea	#4	4'0 1/4"		16.12 lbs	
	TB-1	6 ea	#4	9'0 1/4"	5'4 3/4"	36.16 lbs	
						122.64 lbs	

6.0x7.5x06 Std Top — **HIGHWAY REBAR**

Unit Dims	Bar Mark	Qnty	Size	Length	Dim "A"	Bar Weight	Remarks
H=6'0"	H-1	5 ea	#4	7'2"		23.94 lbs	
W=7'6"	U-1	6 ea	#3	6'3"		14.10 lbs	
S=6'0"	V-2	6 ea	#5	5'8"		35.46 lbs	
SH=5'0"	S-1	6 ea	#4	4'0 1/4"		16.12 lbs	
	TB-1	6 ea	#4	9'0 1/4"	5'4 3/4"	36.16 lbs	
						125.77 lbs	

6.5x7.5x06 Std Top — **HIGHWAY REBAR**

Unit Dims	Bar Mark	Qnty	Size	Length	Dim "A"	Bar Weight	Remarks
H=6'6"	H-1	6 ea	#4	7'2"		28.72 lbs	
W=7'6"	U-1	6 ea	#3	6'3"		14.10 lbs	
S=6'0"	V-2	6 ea	#5	6'2"		38.59 lbs	
SH=5'0"	S-1	6 ea	#4	4'0 1/4"		16.12 lbs	
	TB-1	6 ea	#4	9'0 1/4"	5'4 3/4"	36.16 lbs	
						133.69 lbs	

7.0x7.5x06 Std Top — **HIGHWAY REBAR**

Unit Dims	Bar Mark	Qnty	Size	Length	Dim "A"	Bar Weight	Remarks
H=7'0"	H-1	6 ea	#4	7'2"		28.72 lbs	
W=7'6"	U-1	6 ea	#3	6'3"		14.10 lbs	
S=6'0"	V-2	6 ea	#5	6'8"		41.72 lbs	
SH=5'0"	S-1	6 ea	#4	4'0 1/4"		16.12 lbs	
	TB-1	6 ea	#4	9'0 1/4"	5'4 3/4"	36.16 lbs	
						136.82 lbs	

7.5x7.5x06 Std Top — **HIGHWAY REBAR**

Unit Dims	Bar Mark	Qnty	Size	Length	Dim "A"	Bar Weight	Remarks
H=7'6"	H-1	7 ea	#4	7'2"		33.51 lbs	
W=7'6"	U-1	6 ea	#3	6'3"		14.10 lbs	
S=6'0"	V-2	6 ea	#5	7'2"		44.85 lbs	
SH=5'0"	S-1	6 ea	#4	4'0 1/4"		16.12 lbs	
	TB-1	6 ea	#4	9'0 1/4"	5'4 3/4"	36.16 lbs	
						144.73 lbs	

8.0x7.5x06 Std Top ** — **HIGHWAY REBAR**

Unit Dims	Bar Mark	Qnty	Size	Length	Dim "A"	Bar Weight	Remarks
H=8'0"	H-1	7 ea	#4	7'2"		33.51 lbs	
W=7'6"	U-1	6 ea	#3	6'3"		14.10 lbs	
S=6'0"	V-2	6 ea	#5	7'8"		47.98 lbs	
SH=5'0"	S-1	6 ea	#4	4'0 1/4"		16.12 lbs	
	TB-1	6 ea	#4	9'0 1/4"	5'4 3/4"	36.16 lbs	
						147.86 lbs	

8.5x7.5x06 Std Top ** — **HIGHWAY REBAR**

Unit Dims	Bar Mark	Qnty	Size	Length	Dim "A"	Bar Weight	Remarks
H=8'6"	H-1	8 ea	#4	7'2"		38.30 lbs	
W=7'6"	U-1	6 ea	#3	6'3"		14.10 lbs	
S=6'0"	V-2	6 ea	#5	8'2"		51.11 lbs	
SH=5'0"	S-1	6 ea	#4	4'0 1/4"		16.12 lbs	
	TB-1	6 ea	#5	9'0 1/4"	5'4 3/4"	56.45 lbs	
						176.07 lbs	

9.0x7.5x06 Std Top ** — **HIGHWAY REBAR**

Unit Dims	Bar Mark	Qnty	Size	Length	Dim "A"	Bar Weight	Remarks
H=9'0"	H-1	8 ea	#4	7'2"		38.30 lbs	
W=7'6"	U-1	6 ea	#3	6'3"		14.10 lbs	
S=6'0"	V-2	6 ea	#6	8'8"		78.10 lbs	
SH=5'0"	S-1	6 ea	#4	4'0 1/4"		16.12 lbs	
	TB-1	6 ea	#6	9'0 1/4"	5'4 3/4"	81.30 lbs	
						227.91 lbs	

9.5x7.5x06 Std Top ** — **HIGHWAY REBAR**

Unit Dims	Bar Mark	Qnty	Size	Length	Dim "A"	Bar Weight	Remarks
H=9'6"	H-1	9 ea	#4	7'2"		43.09 lbs	
W=7'6"	U-1	6 ea	#3	6'3"		14.10 lbs	
S=6'0"	V-2	6 ea	#6	9'2"		82.61 lbs	
SH=5'0"	S-1	6 ea	#4	4'0 1/4"		16.12 lbs	
	TB-1	6 ea	#6	9'0 1/4"	5'4 3/4"	81.30 lbs	
						237.21 lbs	

10.0x7.5x06 Std Top ** — **HIGHWAY REBAR**

Unit Dims	Bar Mark	Qnty	Size	Length	Dim "A"	Bar Weight	Remarks
H=10'0 3/4"	H-1	9 ea	#4	7'2"		43.09 lbs	
W=7'6"	U-1	6 ea	#3	6'3"		14.10 lbs	
S=6'0"	V-2	6 ea	#7	9'8 3/4"		119.32 lbs	
SH=5'0"	S-1	6 ea	#4	4'0 1/4"		16.12 lbs	
	TB-1	6 ea	#6	9'0 1/4"	5'4 3/4"	81.30 lbs	
						273.92 lbs	

T-WALL UNIT PROPERTIES

UNIT TYPE	H	W	S	Tf*	SH	VOLUME*	WEIGHT*
5.5x7.5x06 Std Top	5'6"	7'6"	6'0"	8"	5'0"	1.61 cy	6,525 lbs
6.0x7.5x06 Std Top	6'0"	7'6"	6'0"	8"	5'0"	1.70 cy	6,900 lbs
6.5x7.5x06 Std Top	6'6"	7'6"	6'0"	8"	5'0"	1.80 cy	7,275 lbs
7.0x7.5x06 Std Top	7'0"	7'6"	6'0"	8"	5'0"	1.89 cy	7,650 lbs
7.5x7.5x06 Std Top	7'6"	7'6"	6'0"	8"	5'0"	1.98 cy	8,025 lbs
8.0x7.5x06 Std Top **	8'0"	7'6"	6'0"	8"	5'0"	2.07 cy	8,400 lbs
8.5x7.5x06 Std Top **	8'6"	7'6"	6'0"	8"	5'0"	2.17 cy	8,775 lbs
9.0x7.5x06 Std Top **	9'0"	7'6"	6'0"	8"	5'0"	2.26 cy	9,150 lbs
9.5x7.5x06 Std Top **	9'6"	7'6"	6'0"	8"	5'0"	2.35 cy	9,525 lbs
10.0x7.5x06 Std Top **	10'0 3/4"	7'6"	6'0"	8"	5'0"	2.46 cy	9,947 lbs

*** VOLUMES AND WEIGHTS ON THIS TABLE ARE BASED ON 8" FACE THICKNESS (Tf)**
FORMLINER FINISHES MAY INCREASE FACE THICKNESS, VOLUME AND WEIGHT.

**** THESE TOP UNITS ARE ALLOWED FOR SLOPING CONDITIONS ON TOP OF WALL ONLY**

LIFTING INSERT DATA

UNIT TYPE	DISTANCE TO CENTROID FROM FRONT FACE	DISTANCE TO INSERT #1 FROM FRONT FACE	DISTANCE TO INSERT #2 FROM FRONT FACE
5.5x7.5x06 Std Top	1'3 1/4"	4"	3'6"
6.0x7.5x06 Std Top	1'2 5/8"	4"	1'6"
6.5x7.5x06 Std Top	1'2"	4"	1'6"
7.0x7.5x06 Std Top	1'1 1/2"	4"	1'6"
7.5x7.5x06 Std Top	1'1 1/8"	4"	1'6"
8.0x7.5x06 Std Top **	1'0 5/8"	4"	1'6"
8.5x7.5x06 Std Top **	1'0 1/4"	4"	1'6"
9.0x7.5x06 Std Top **	1'0"	4"	1'6"
9.5x7.5x06 Std Top **	11 5/8"	4"	1'6"
10.0x7.5x06 Std Top **	11 3/8"	4"	1'6"

4/13/2017

DESIGNER

THE NEEL COMPANY
8328-D TRAFORD LANE
SPRINGFIELD, VA 22152
PH: (703) 913-7858
FX: (703) 913-7859
Web: www.neelco.com

This drawing contains information proprietary to The Neel Company. The Neel Company is the exclusive licensee of the T-WALL® patent. ©2017, The Neel Company

DATE: 03-23-17
SCALE: NO SCALE
DESIGNED: JMC
DRAWN: CJW
CHECKED: CCG/KD
TNC JOB #: TW3634
TNC SHT #32 OF 67

PA DOT DWG # 87-402 PE (REVISION IV)

COMMONWEALTH OF PENNSYLVANIA
DEPARTMENT OF TRANSPORTATION
BUREAU OF PROJECT DELIVERY

T-WALL® STANDARDS
PREFABRICATED T-WALL® RETAINING WALL SYSTEM

SHOP DRAWINGS
REBAR
7.50' WIDE STANDARD TOP UNIT (III)

DATE: 03-23-17 TNC JOB #: TW3634 PLOT DATE AND TIME: Wednesday, March 22, 2017 15:49:05 CAD FILE NAME: 030 Rebar - RWY Std Top r4-0.vwx

REBAR SCHEDULES

5.5x7.5x08 Std Top — **HIGHWAY REBAR**

Unit Dims	Bar Mark	Qnty	Size	Length	Dim "A"	Bar Weight	Remarks
H=5'6"	H-1	5 ea	#4	7'2"		23.94 lbs	
W=7'6"	U-1	8 ea	#3	6'3"		18.80 lbs	
S=8'0"	V-2	6 ea	#5	5'2"		32.33 lbs	
SH=5'0"	S-1	6 ea	#4	4'0 1/4"		16.12 lbs	
	TB-1	6 ea	#4	11'0 1/4"	7'4 3/4"	44.17 lbs	
						135.36 lbs	

6.0x7.5x08 Std Top — **HIGHWAY REBAR**

Unit Dims	Bar Mark	Qnty	Size	Length	Dim "A"	Bar Weight	Remarks
H=6'0"	H-1	5 ea	#4	7'2"		23.94 lbs	
W=7'6"	U-1	8 ea	#3	6'3"		18.80 lbs	
S=8'0"	V-2	6 ea	#5	5'8"		35.46 lbs	
SH=5'0"	S-1	6 ea	#4	4'0 1/4"		16.12 lbs	
	TB-1	6 ea	#4	11'0 1/4"	7'4 3/4"	44.17 lbs	
						138.49 lbs	

6.5x7.5x08 Std Top — **HIGHWAY REBAR**

Unit Dims	Bar Mark	Qnty	Size	Length	Dim "A"	Bar Weight	Remarks
H=6'6"	H-1	6 ea	#4	7'2"		28.72 lbs	
W=7'6"	U-1	8 ea	#3	6'3"		18.80 lbs	
S=8'0"	V-2	6 ea	#5	6'2"		38.59 lbs	
SH=5'0"	S-1	6 ea	#4	4'0 1/4"		16.12 lbs	
	TB-1	6 ea	#4	11'0 1/4"	7'4 3/4"	44.17 lbs	
						146.40 lbs	

7.0x7.5x08 Std Top — **HIGHWAY REBAR**

Unit Dims	Bar Mark	Qnty	Size	Length	Dim "A"	Bar Weight	Remarks
H=7'0"	H-1	6 ea	#4	7'2"		28.72 lbs	
W=7'6"	U-1	8 ea	#3	6'3"		18.80 lbs	
S=8'0"	V-2	6 ea	#5	6'8"		41.72 lbs	
SH=5'0"	S-1	6 ea	#4	4'0 1/4"		16.12 lbs	
	TB-1	6 ea	#4	11'0 1/4"	7'4 3/4"	44.17 lbs	
						149.53 lbs	

7.5x7.5x08 Std Top — **HIGHWAY REBAR**

Unit Dims	Bar Mark	Qnty	Size	Length	Dim "A"	Bar Weight	Remarks
H=7'6"	H-1	7 ea	#4	7'2"		33.51 lbs	
W=7'6"	U-1	8 ea	#3	6'3"		18.80 lbs	
S=8'0"	V-2	6 ea	#5	7'2"		44.85 lbs	
SH=5'0"	S-1	6 ea	#4	4'0 1/4"		16.12 lbs	
	TB-1	6 ea	#4	11'0 1/4"	7'4 3/4"	44.17 lbs	
						157.45 lbs	

8.0x7.5x08 Std Top — **HIGHWAY REBAR**

Unit Dims	Bar Mark	Qnty	Size	Length	Dim "A"	Bar Weight	Remarks
H=8'0"	H-1	7 ea	#4	7'2"		33.51 lbs	
W=7'6"	U-1	8 ea	#3	6'3"		18.80 lbs	
S=8'0"	V-2	6 ea	#5	7'8"		47.98 lbs	
SH=5'0"	S-1	6 ea	#4	4'0 1/4"		16.12 lbs	
	TB-1	6 ea	#4	11'0 1/4"	7'4 3/4"	44.17 lbs	
						160.58 lbs	

8.5x7.5x08 Std Top — **HIGHWAY REBAR**

Unit Dims	Bar Mark	Qnty	Size	Length	Dim "A"	Bar Weight	Remarks
H=8'6"	H-1	8 ea	#4	7'2"		38.30 lbs	
W=7'6"	U-1	8 ea	#3	6'3"		18.80 lbs	
S=8'0"	V-2	6 ea	#5	8'2"		51.11 lbs	
SH=5'0"	S-1	6 ea	#4	4'0 1/4"		16.12 lbs	
	TB-1	6 ea	#5	11'0 1/4"	7'4 3/4"	68.97 lbs	
						193.29 lbs	

9.0x7.5x08 Std Top — **HIGHWAY REBAR**

Unit Dims	Bar Mark	Qnty	Size	Length	Dim "A"	Bar Weight	Remarks
H=9'0"	H-1	8 ea	#4	7'2"		38.30 lbs	
W=7'6"	U-1	8 ea	#3	6'3"		18.80 lbs	
S=8'0"	V-2	6 ea	#6	8'8"		78.10 lbs	
SH=5'0"	S-1	6 ea	#4	4'0 1/4"		16.12 lbs	
	TB-1	6 ea	#6	11'0 1/4"	7'4 3/4"	99.32 lbs	
						250.64 lbs	

9.5x7.5x08 Std Top — **HIGHWAY REBAR**

Unit Dims	Bar Mark	Qnty	Size	Length	Dim "A"	Bar Weight	Remarks
H=9'6"	H-1	9 ea	#4	7'2"		43.09 lbs	
W=7'6"	U-1	8 ea	#3	6'3"		18.80 lbs	
S=8'0"	V-2	6 ea	#6	9'2"		82.61 lbs	
SH=5'0"	S-1	6 ea	#4	4'0 1/4"		16.12 lbs	
	TB-1	6 ea	#6	11'0 1/4"	7'4 3/4"	99.32 lbs	
						259.93 lbs	

10.0x7.5x08 Std Top — **HIGHWAY REBAR**

Unit Dims	Bar Mark	Qnty	Size	Length	Dim "A"	Bar Weight	Remarks
H=10'0"	H-1	9 ea	#4	7'2"		43.09 lbs	
W=7'6"	U-1	8 ea	#3	6'3"		18.80 lbs	
S=8'0"	V-2	6 ea	#7	9'8"		118.55 lbs	
SH=5'0"	S-1	6 ea	#4	4'0 1/4"		16.12 lbs	
	TB-1	6 ea	#6	11'0 1/4"	7'4 3/4"	99.32 lbs	
						295.87 lbs	

T-WALL UNIT PROPERTIES

UNIT TYPE	H	W	S	Tf*	SH	VOLUME*	WEIGHT*
5.5x7.5x08 Std Top	5'6"	7'6"	8'0"	8"	5'0"	1.79 cy	7,266 lbs
6.0x7.5x08 Std Top	6'0"	7'6"	8'0"	8"	5'0"	1.89 cy	7,641 lbs
6.5x7.5x08 Std Top	6'6"	7'6"	8'0"	8"	5'0"	1.98 cy	8,016 lbs
7.0x7.5x08 Std Top	7'0"	7'6"	8'0"	8"	5'0"	2.07 cy	8,391 lbs
7.5x7.5x08 Std Top	7'6"	7'6"	8'0"	8"	5'0"	2.16 cy	8,766 lbs
8.0x7.5x08 Std Top	8'0"	7'6"	8'0"	8"	5'0"	2.26 cy	9,141 lbs
8.5x7.5x08 Std Top	8'6"	7'6"	8'0"	8"	5'0"	2.35 cy	9,516 lbs
9.0x7.5x08 Std Top	9'0"	7'6"	8'0"	8"	5'0"	2.44 cy	9,891 lbs
9.5x7.5x08 Std Top	9'6"	7'6"	8'0"	8"	5'0"	2.53 cy	10,266 lbs
10.0x7.5x08 Std Top	10'0"	7'6"	8'0"	8"	5'0"	2.63 cy	10,641 lbs

*** VOLUMES AND WEIGHTS ON THIS TABLE ARE BASED ON 8" FACE THICKNESS (Tf)**
FORMLINER FINISHES MAY INCREASE FACE THICKNESS, VOLUME AND WEIGHT.

LIFTING INSERT DATA

UNIT TYPE	DISTANCE TO CENTROID FROM FRONT FACE	DISTANCE TO INSERT #1 FROM FRONT FACE	DISTANCE TO INSERT #2 FROM FRONT FACE
5.5x7.5x08 Std Top	1'10 1/8"	4"	3'6"
6.0x7.5x08 Std Top	1'9 1/8"	4"	3'6"
6.5x7.5x08 Std Top	1'8 1/4"	4"	3'6"
7.0x7.5x08 Std Top	1'7 1/2"	4"	3'6"
7.5x7.5x08 Std Top	1'6 3/4"	4"	3'6"
8.0x7.5x08 Std Top	1'6 1/8"	4"	3'6"
8.5x7.5x08 Std Top	1'5 1/2"	4"	3'6"
9.0x7.5x08 Std Top	1'5"	4"	3'6"
9.5x7.5x08 Std Top	1'4 1/2"	4"	3'6"
10.0x7.5x08 Std Top	1'4 1/8"	4"	3'6"

PA DOT DWG # 87-402 PE (REVISION IV)

COMMONWEALTH OF PENNSYLVANIA
DEPARTMENT OF TRANSPORTATION
BUREAU OF PROJECT DELIVERY

T-WALL® STANDARDS
PREFABRICATED T-WALL® RETAINING WALL SYSTEM

SHOP DRAWINGS
REBAR
7.50' WIDE STANDARD TOP UNIT (IV)

4/13/2017

DESIGNER

THE NEEL COMPANY
8328-D TRAFORD LANE
SPRINGFIELD, VA 22152
PH: (703) 913-7858
FX: (703) 913-7859
Web: www.neelco.com

This drawing contains information proprietary to The Neel Company. The Neel Company is the exclusive licensee of the T-WALL® patent. ©2017, The Neel Company

DATE: 03-23-17
SCALE: NO SCALE
DESIGNED: JMC
DRAWN: CJW
CHECKED: CCG/KD
TNC JOB #: TW3634
TNC SHT #33 OF 67

SHEET 33 OF 67

87-402 PE

DATE: 03-23-17 TNC JOB #: TW3634 PLOT DATE AND TIME: Wednesday, March 22, 2017 15:49:05 CAD FILE NAME: 030 Rebar - RWY Std Top r4-0.vwx

REBAR SCHEDULES

5.5x7.5x10 Std Top — **HIGHWAY REBAR**

Unit Dims	Bar Mark	Qnty	Size	Length	Dim "A"	Bar Weight	Remarks
H=5'6"	H-1	5 ea	#4	7'2"		23.94 lbs	
W=7'6"	U-1	10 ea	#3	6'3"		23.50 lbs	
S=10'0"	V-2	6 ea	#5	5'2"		32.33 lbs	
SH=5'0"	S-1	6 ea	#4	4'0 1/4"		16.12 lbs	
	TB-1	6 ea	#4	13'0 1/4"	9'4 3/4"	52.19 lbs	
						148.07 lbs	

6.0x7.5x10 Std Top — **HIGHWAY REBAR**

Unit Dims	Bar Mark	Qnty	Size	Length	Dim "A"	Bar Weight	Remarks
H=6'0"	H-1	5 ea	#4	7'2"		23.94 lbs	
W=7'6"	U-1	10 ea	#3	6'3"		23.50 lbs	
S=10'0"	V-2	6 ea	#5	5'8"		35.46 lbs	
SH=5'0"	S-1	6 ea	#4	4'0 1/4"		16.12 lbs	
	TB-1	6 ea	#4	13'0 1/4"	9'4 3/4"	52.19 lbs	
						151.20 lbs	

6.5x7.5x10 Std Top — **HIGHWAY REBAR**

Unit Dims	Bar Mark	Qnty	Size	Length	Dim "A"	Bar Weight	Remarks
H=6'6"	H-1	6 ea	#4	7'2"		28.72 lbs	
W=7'6"	U-1	10 ea	#3	6'3"		23.50 lbs	
S=10'0"	V-2	6 ea	#5	6'2"		38.59 lbs	
SH=5'0"	S-1	6 ea	#4	4'0 1/4"		16.12 lbs	
	TB-1	6 ea	#4	13'0 1/4"	9'4 3/4"	52.19 lbs	
						159.12 lbs	

7.0x7.5x10 Std Top — **HIGHWAY REBAR**

Unit Dims	Bar Mark	Qnty	Size	Length	Dim "A"	Bar Weight	Remarks
H=7'0"	H-1	6 ea	#4	7'2"		28.72 lbs	
W=7'6"	U-1	10 ea	#3	6'3"		23.50 lbs	
S=10'0"	V-2	6 ea	#5	6'8"		41.72 lbs	
SH=5'0"	S-1	6 ea	#4	4'0 1/4"		16.12 lbs	
	TB-1	6 ea	#4	13'0 1/4"	9'4 3/4"	52.19 lbs	
						162.25 lbs	

7.5x7.5x10 Std Top — **HIGHWAY REBAR**

Unit Dims	Bar Mark	Qnty	Size	Length	Dim "A"	Bar Weight	Remarks
H=7'6"	H-1	7 ea	#4	7'2"		33.51 lbs	
W=7'6"	U-1	10 ea	#3	6'3"		23.50 lbs	
S=10'0"	V-2	6 ea	#5	7'2"		44.85 lbs	
SH=5'0"	S-1	6 ea	#4	4'0 1/4"		16.12 lbs	
	TB-1	6 ea	#4	13'0 1/4"	9'4 3/4"	52.19 lbs	
						170.16 lbs	

8.0x7.5x10 Std Top — **HIGHWAY REBAR**

Unit Dims	Bar Mark	Qnty	Size	Length	Dim "A"	Bar Weight	Remarks
H=8'0"	H-1	7 ea	#4	7'2"		33.51 lbs	
W=7'6"	U-1	10 ea	#3	6'3"		23.50 lbs	
S=10'0"	V-2	6 ea	#5	7'8"		47.98 lbs	
SH=5'0"	S-1	6 ea	#4	4'0 1/4"		16.12 lbs	
	TB-1	6 ea	#4	13'0 1/4"	9'4 3/4"	52.19 lbs	
						173.29 lbs	

8.5x7.5x10 Std Top — **HIGHWAY REBAR**

Unit Dims	Bar Mark	Qnty	Size	Length	Dim "A"	Bar Weight	Remarks
H=8'6"	H-1	8 ea	#4	7'2"		38.30 lbs	
W=7'6"	U-1	10 ea	#3	6'3"		23.50 lbs	
S=10'0"	V-2	6 ea	#5	8'2"		51.11 lbs	
SH=5'0"	S-1	6 ea	#4	4'0 1/4"		16.12 lbs	
	TB-1	6 ea	#5	13'0 1/4"	9'4 3/4"	81.48 lbs	
						210.51 lbs	

9.0x7.5x10 Std Top — **HIGHWAY REBAR**

Unit Dims	Bar Mark	Qnty	Size	Length	Dim "A"	Bar Weight	Remarks
H=9'0"	H-1	8 ea	#4	7'2"		38.30 lbs	
W=7'6"	U-1	10 ea	#3	6'3"		23.50 lbs	
S=10'0"	V-2	6 ea	#6	8'8"		78.10 lbs	
SH=5'0"	S-1	6 ea	#4	4'0 1/4"		16.12 lbs	
	TB-1	6 ea	#6	13'0 1/4"	9'4 3/4"	117.34 lbs	
						273.36 lbs	

9.5x7.5x10 Std Top — **HIGHWAY REBAR**

Unit Dims	Bar Mark	Qnty	Size	Length	Dim "A"	Bar Weight	Remarks
H=9'6"	H-1	9 ea	#4	7'2"		43.09 lbs	
W=7'6"	U-1	10 ea	#3	6'3"		23.50 lbs	
S=10'0"	V-2	6 ea	#6	9'2"		82.61 lbs	
SH=5'0"	S-1	6 ea	#4	4'0 1/4"		16.12 lbs	
	TB-1	6 ea	#6	13'0 1/4"	9'4 3/4"	117.34 lbs	
						282.66 lbs	

10.0x7.5x10 Std Top — **HIGHWAY REBAR**

Unit Dims	Bar Mark	Qnty	Size	Length	Dim "A"	Bar Weight	Remarks
H=10'0"	H-1	9 ea	#4	7'2"		43.09 lbs	
W=7'6"	U-1	10 ea	#3	6'3"		23.50 lbs	
S=10'0"	V-2	6 ea	#7	9'8"		118.55 lbs	
SH=5'0"	S-1	6 ea	#4	4'0 1/4"		16.12 lbs	
	TB-1	6 ea	#6	13'0 1/4"	9'4 3/4"	117.34 lbs	
						318.60 lbs	

T-WALL UNIT PROPERTIES

UNIT TYPE	H	W	S	Tf*	SH	VOLUME*	WEIGHT*
5.5x7.5x10 Std Top	5'6"	7'6"	10'0"	8"	5'0"	1.98 cy	8,008 lbs
6.0x7.5x10 Std Top	6'0"	7'6"	10'0"	8"	5'0"	2.07 cy	8,383 lbs
6.5x7.5x10 Std Top	6'6"	7'6"	10'0"	8"	5'0"	2.16 cy	8,758 lbs
7.0x7.5x10 Std Top	7'0"	7'6"	10'0"	8"	5'0"	2.25 cy	9,133 lbs
7.5x7.5x10 Std Top	7'6"	7'6"	10'0"	8"	5'0"	2.35 cy	9,508 lbs
8.0x7.5x10 Std Top	8'0"	7'6"	10'0"	8"	5'0"	2.44 cy	9,883 lbs
8.5x7.5x10 Std Top	8'6"	7'6"	10'0"	8"	5'0"	2.53 cy	10,258 lbs
9.0x7.5x10 Std Top	9'0"	7'6"	10'0"	8"	5'0"	2.63 cy	10,633 lbs
9.5x7.5x10 Std Top	9'6"	7'6"	10'0"	8"	5'0"	2.72 cy	11,008 lbs
10.0x7.5x10 Std Top	10'0"	7'6"	10'0"	8"	5'0"	2.81 cy	11,383 lbs

*** VOLUMES AND WEIGHTS ON THIS TABLE ARE BASED ON 8" FACE THICKNESS (Tf)**
FORMLINER FINISHES MAY INCREASE FACE THICKNESS, VOLUME AND WEIGHT.

LIFTING INSERT DATA

UNIT TYPE	DISTANCE TO CENTROID FROM FRONT FACE	DISTANCE TO INSERT #1 FROM FRONT FACE	DISTANCE TO INSERT #2 FROM FRONT FACE
5.5x7.5x10 Std Top	2'5 7/8"	4"	5'6"
6.0x7.5x10 Std Top	2'4 5/8"	4"	5'6"
6.5x7.5x10 Std Top	2'3 3/8"	4"	5'6"
7.0x7.5x10 Std Top	2'2 3/8"	4"	3'6"
7.5x7.5x10 Std Top	2'1 3/8"	4"	3'6"
8.0x7.5x10 Std Top	2'0 1/2"	4"	3'6"
8.5x7.5x10 Std Top	1'11 3/4"	4"	3'6"
9.0x7.5x10 Std Top	1'11"	4"	3'6"
9.5x7.5x10 Std Top	1'10 1/4"	4"	3'6"
10.0x7.5x10 Std Top	1'9 5/8"	4"	3'6"

4/13/2017

DESIGNER

THE NEEL COMPANY
8328-D TRAFORD LANE
SPRINGFIELD, VA 22152
PH: (703) 913-7858
FX: (703) 913-7859
Web: www.neelco.com

This drawing contains information proprietary to The Neel Company. The Neel Company is the exclusive licensee of the T-WALL® patent. ©2017, The Neel Company

DATE: 03-23-17
SCALE: NO SCALE
DESIGNED: JMC
DRAWN: CJW
CHECKED: CCG/KD
TNC JOB #: TW3634
TNC SHT #34 OF 67

PA DOT DWG # 87-402 PE (REVISION IV)

COMMONWEALTH OF PENNSYLVANIA
DEPARTMENT OF TRANSPORTATION
BUREAU OF PROJECT DELIVERY

T-WALL® STANDARDS
PREFABRICATED T-WALL® RETAINING WALL SYSTEM

SHOP DRAWINGS
REBAR
7.50' WIDE STANDARD TOP UNIT (V)

DATE: 03-23-17 TNC JOB #: TW3634 PLOT DATE AND TIME: Wednesday, March 22, 2017 15:49:05 CAD FILE NAME: 030 Rebar - RWY Std Top r4-0.vwx

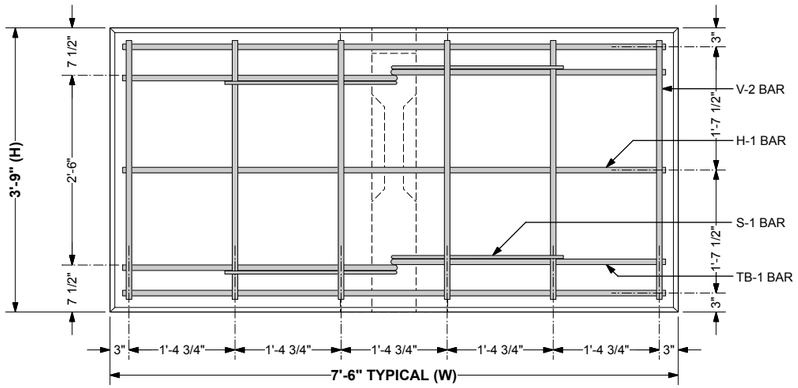

3 FRONT VIEW - 3.75 x 7.50 THREE QUARTER UNIT
Scale: 1" = 1'-0"

(U-1 BARS IN STEM OMITTED FOR CLARITY)

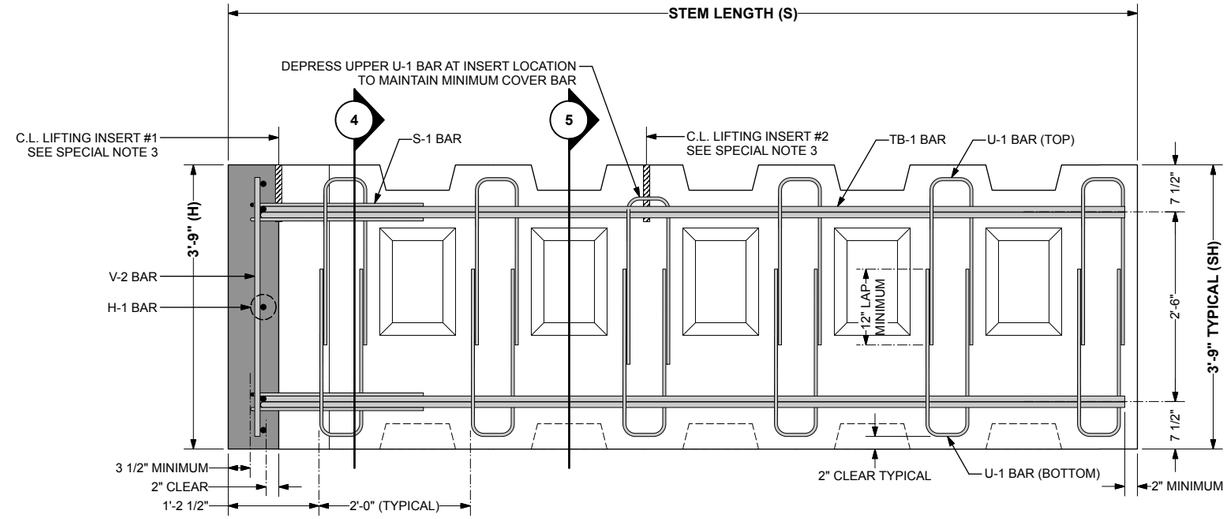

2 SIDE VIEW - 3.75 x 7.50 THREE QUARTER UNIT (12'-0" STEM SHOWN)
Scale: 1" = 1'-0"

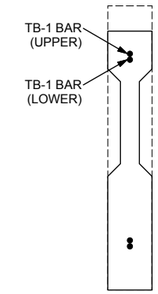

5 SECTION THROUGH STEM
Scale: 1" = 1'-0"

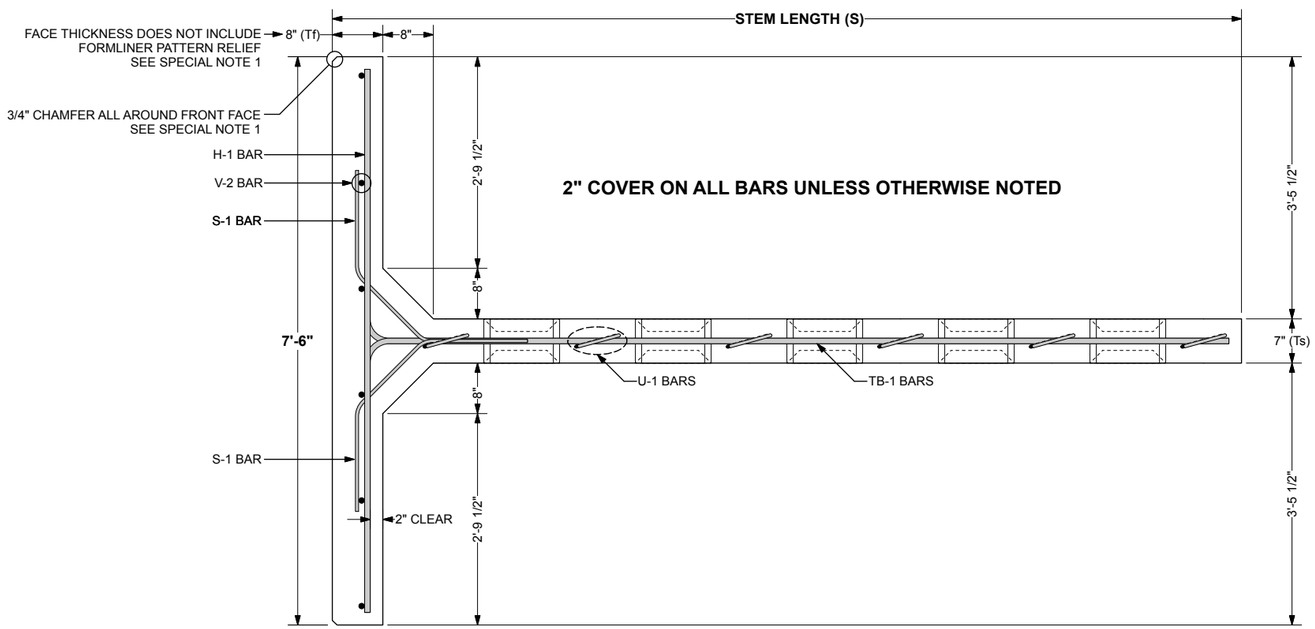

1 PLAN VIEW - 3.75 x 7.50 THREE QUARTER UNIT (12'-0" STEM SHOWN)
Scale: 1" = 1'-0"

SPECIAL NOTES:

1. FRONT FACE OF T-WALL® UNITS FINISH TREATMENT:
   - PER CONTRACT DRAWINGS AND SPECS.
   - MINIMUM FRONT FACE THICKNESS SHALL BE 8"
2. TOP & BOTTOM SHEAR KEY BLOCKOUTS MAY BE LEFT OUT IN AN ALTERNATING PATTERN WHEN STEM LENGTHS BECOME LONGER THAN 12 FT (SPACED AT 2'-0"). ALL BLOCKOUTS ARE REQUIRED IN THE STEM FOR THE FIRST 12 FT OF LENGTH. REGARDLESS OF OVERALL LENGTH.
3. LIFTING INSERTS:
   - MEADOW BURKE RAPID LIFT RL-22 LIFTING INSERT WITH RL-32 REBAR OR DAYTON SUPERIOR P-53 5-TON SWIFT LIFT EYE WITH P-60 TENSION BAR.
   - 8000 LBS (4 TONS) MINIMUM RATED WORKING LOAD CAPACITY.
   - REFER TO LIFTING INSERT DATA TABLE FOR INSERT LOCATIONS.
   - LIFTING INSERTS TO BE GALVANIZED.

GENERAL NOTES:

1. PRIMARY REFERENCE: AASHTO LRFD BRIDGE SPECIFICATIONS, 5th EDITION, 2010 WITH INTERIM REVISIONS
2. MINIMUM CONCRETE COVER IS DESIGNED FOR 2" ON ALL BARS. TOLERANCES PER CONSTRUCTION SPECIFICATIONS SECTION 2.0.
3. ALL MATERIAL AND TOLERANCES IN ACCORDS TO T-WALL® CONSTRUCTION SPECIFICATIONS, SECTION 2.0 MATERIALS.
4. REBAR:
   - SEE CONSTRUCTION SPECIFICATION, SECTION 2.0 MATERIALS OR PER CONTRACT DRAWINGS AND SPECS.
5. CONCRETE:
   - F'c = 5000 psi @ 28 DAYS

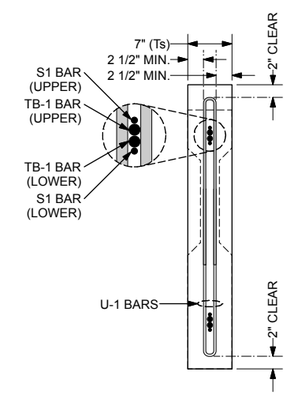

4 SECTION THROUGH STEM
Scale: 1" = 1'-0"

PA DOT DWG # 87-402 PE (REVISION IV)

COMMONWEALTH OF PENNSYLVANIA
DEPARTMENT OF TRANSPORTATION
BUREAU OF PROJECT DELIVERY

T-WALL® STANDARDS
PREFABRICATED T-WALL® RETAINING WALL SYSTEM

SHOP DRAWINGS
REBAR
THREE QUARTER UNIT (I)

DESIGNER
THE NEEL COMPANY
8328-D TRAFORD LANE
SPRINGFIELD, VA 22152
PH: (703) 913-7858
FX: (703) 913-7859
Web: www.neelco.com

This drawing contains information proprietary to The Neel Company. The Neel Company is the exclusive licensee of the T-WALL® patent. ©2017, The Neel Company

DATE:	03-23-17
SCALE:	AS NOTED
DESIGNED:	JMC
DRAWN:	CJW
CHECKED:	CCG/KD
TNC JOB #:	TW3634
TNC SHT #	35 OF 67

SHEET 35 OF 67

87-402 PE

4/13/2017

DATE: 03-23-17 TNC JOB #: TW3634 PLOT DATE AND TIME: Wednesday, March 22, 2017 15:48:56 CAD FILE NAME: 035 Rebar - RWY Tqr r4-0.vwx

T-WALL UNIT PROPERTIES

UNIT TYPE	H	W	S	Tf*	SH	VOLUME*	WEIGHT*
3.75x7.5x06 Tqr	3'9"	7'6"	6'0"	8"	3'9"	1.15 cy	4,652 lbs
3.75x7.5x08 Tqr	3'9"	7'6"	8'0"	8"	3'9"	1.29 cy	5,229 lbs
3.75x7.5x10 Tqr	3'9"	7'6"	10'0"	8"	3'9"	1.43 cy	5,805 lbs
3.75x7.5x12 Tqr	3'9"	7'6"	12'0"	8"	3'9"	1.58 cy	6,381 lbs
3.75x7.5x14 Tqr	3'9"	7'6"	14'0"	8"	3'9"	1.72 cy	6,957 lbs
3.75x7.5x16 Tqr	3'9"	7'6"	16'0"	8"	3'9"	1.86 cy	7,533 lbs
3.75x7.5x18 Tqr	3'9"	7'6"	18'0"	8"	3'9"	2.00 cy	8,110 lbs
3.75x7.5x20 Tqr	3'9"	7'6"	20'0"	8"	3'9"	2.14 cy	8,686 lbs
3.75x7.5x22 Tqr	3'9"	7'6"	22'0"	8"	3'9"	2.29 cy	9,262 lbs
3.75x7.5x24 Tqr	3'9"	7'6"	24'0"	8"	3'9"	2.43 cy	9,838 lbs
3.75x7.5x26 Tqr	3'9"	7'6"	26'0"	8"	3'9"	2.57 cy	10,415 lbs
3.75x7.5x28 Tqr	3'9"	7'6"	28'0"	8"	3'9"	2.71 cy	10,991 lbs
3.75x7.5x30 Tqr	3'9"	7'6"	30'0"	8"	3'9"	2.86 cy	11,567 lbs
3.75x7.5x32 Tqr	3'9"	7'6"	32'0"	8"	3'9"	3.00 cy	12,143 lbs

*** VOLUMES AND WEIGHTS ON THIS TABLE ARE BASED ON 8" FACE THICKNESS (Tf)**
FORMLINER FINISHES MAY INCREASE FACE THICKNESS, VOLUME AND WEIGHT.

LIFTING INSERT DATA

UNIT TYPE	DISTANCE TO CENTROID FROM FRONT FACE	DISTANCE TO INSERT #1 FROM FRONT FACE	DISTANCE TO INSERT #2 FROM FRONT FACE
3.75x7.5x06 Tqr	1'4 1/8"	8"	3'6"
3.75x7.5x08 Tqr	1'11 3/8"	8"	3'6"
3.75x7.5x10 Tqr	2'7 5/8"	8"	5'6"
3.75x7.5x12 Tqr	3'4 1/2"	8"	7'6"
3.75x7.5x14 Tqr	4'1 7/8"	8"	7'6"
3.75x7.5x16 Tqr	4'11 3/4"	8"	9'6"
3.75x7.5x18 Tqr	5'9 3/4"	8"	11'6"
3.75x7.5x20 Tqr	6'8 1/8"	8"	13'6"
3.75x7.5x22 Tqr	7'6 5/8"	8"	15'6"
3.75x7.5x24 Tqr	8'5 3/8"	8"	17'6"
3.75x7.5x26 Tqr	9'4 1/4"	8"	19'6"
3.75x7.5x28 Tqr	10'3 1/4"	8"	21'6"
3.75x7.5x30 Tqr	11'2 1/4"	8"	21'6"
3.75x7.5x32 Tqr	12'1 3/8"	8"	23'6"

REBAR SCHEDULES

3.75x7.5x06 Tqr — **HIGHWAY REBAR**

Unit Dims	Bar Mark	Qnty	Size	Length	Dim "A"	Bar Weight	Remarks
H=3'9"	H-1	3 ea	#5	7'2"		22.42 lbs	
W=7'6"	U-1	6 ea	#3	5'0"		11.28 lbs	
S=6'0"	V-2	6 ea	#4	3'5"		13.69 lbs	
SH=3'9"	S-1	4 ea	#4	4'0 1/4"		10.74 lbs	
	TB-1	4 ea	#5	9'0 1/4"	5'4 3/4"	37.63 lbs	
						95.78 lbs	

3.75x7.5x08 Tqr — **HIGHWAY REBAR**

Unit Dims	Bar Mark	Qnty	Size	Length	Dim "A"	Bar Weight	Remarks
H=3'9"	H-1	3 ea	#5	7'2"		22.42 lbs	
W=7'6"	U-1	8 ea	#3	5'0"		15.04 lbs	
S=8'0"	V-2	6 ea	#4	3'5"		13.69 lbs	
SH=3'9"	S-1	4 ea	#4	4'0 1/4"		10.74 lbs	
	TB-1	4 ea	#5	11'0 1/4"	7'4 3/4"	45.98 lbs	
						107.88 lbs	

3.75x7.5x10 Tqr — **HIGHWAY REBAR**

Unit Dims	Bar Mark	Qnty	Size	Length	Dim "A"	Bar Weight	Remarks
H=3'9"	H-1	3 ea	#5	7'2"		22.42 lbs	
W=7'6"	U-1	10 ea	#3	5'0"		18.80 lbs	
S=10'0"	V-2	6 ea	#4	3'5"		13.69 lbs	
SH=3'9"	S-1	4 ea	#4	4'0 1/4"		10.74 lbs	
	TB-1	4 ea	#5	13'0 1/4"	9'4 3/4"	54.32 lbs	
						119.99 lbs	

3.75x7.5x12 Tqr — **HIGHWAY REBAR**

Unit Dims	Bar Mark	Qnty	Size	Length	Dim "A"	Bar Weight	Remarks
H=3'9"	H-1	3 ea	#5	7'2"		22.42 lbs	
W=7'6"	U-1	12 ea	#3	5'0"		22.56 lbs	
S=12'0"	V-2	6 ea	#4	3'5"		13.69 lbs	
SH=3'9"	S-1	4 ea	#4	4'0 1/4"		10.74 lbs	
	TB-1	4 ea	#5	15'0 1/4"	11'4 3/4"	62.67 lbs	
						132.09 lbs	

3.75x7.5x14 Tqr — **HIGHWAY REBAR**

Unit Dims	Bar Mark	Qnty	Size	Length	Dim "A"	Bar Weight	Remarks
H=3'9"	H-1	3 ea	#6	7'2"		32.29 lbs	
W=7'6"	U-1	14 ea	#3	5'0"		26.32 lbs	
S=14'0"	V-2	6 ea	#4	3'5"		13.69 lbs	
SH=3'9"	S-1	4 ea	#4	4'0 1/4"		10.74 lbs	
	TB-1	4 ea	#5	17'0 1/4"	13'4 3/4"	71.01 lbs	
						154.06 lbs	

3.75x7.5x16 Tqr — **HIGHWAY REBAR**

Unit Dims	Bar Mark	Qnty	Size	Length	Dim "A"	Bar Weight	Remarks
H=3'9"	H-1	3 ea	#6	7'2"		32.29 lbs	
W=7'6"	U-1	16 ea	#3	5'0"		30.08 lbs	
S=16'0"	V-2	6 ea	#4	3'5"		13.69 lbs	
SH=3'9"	S-1	4 ea	#4	4'0 1/4"		10.74 lbs	
	TB-1	4 ea	#5	19'0 1/4"	15'4 3/4"	79.35 lbs	
						166.17 lbs	

3.75x7.5x18 Tqr — **HIGHWAY REBAR**

Unit Dims	Bar Mark	Qnty	Size	Length	Dim "A"	Bar Weight	Remarks
H=3'9"	H-1	3 ea	#6	7'2"		32.29 lbs	
W=7'6"	U-1	18 ea	#3	5'0"		33.84 lbs	
S=18'0"	V-2	6 ea	#4	3'5"		13.69 lbs	
SH=3'9"	S-1	4 ea	#4	4'0 1/4"		10.74 lbs	
	TB-1	4 ea	#5	21'0 1/4"	17'4 3/4"	87.70 lbs	
						178.27 lbs	

REBAR SCHEDULES

3.75x7.5x20 Tqr — **HIGHWAY REBAR**

Unit Dims	Bar Mark	Qnty	Size	Length	Dim "A"	Bar Weight	Remarks
H=3'9"	H-1	3 ea	#7	7'2"		43.95 lbs	
W=7'6"	U-1	20 ea	#3	5'0"		37.60 lbs	
S=20'0"	V-2	6 ea	#4	3'5"		13.69 lbs	
SH=3'9"	S-1	4 ea	#4	4'0 1/4"		10.74 lbs	
	TB-1	4 ea	#5	23'0 1/4"	19'4 3/4"	96.04 lbs	
						202.03 lbs	

3.75x7.5x22 Tqr — **HIGHWAY REBAR**

Unit Dims	Bar Mark	Qnty	Size	Length	Dim "A"	Bar Weight	Remarks
H=3'9"	H-1	3 ea	#7	7'2"		43.95 lbs	
W=7'6"	U-1	22 ea	#3	5'0"		41.36 lbs	
S=22'0"	V-2	6 ea	#4	3'5"		13.69 lbs	
SH=3'9"	S-1	4 ea	#4	4'0 1/4"		10.74 lbs	
	TB-1	4 ea	#5	25'0 1/4"	21'4 3/4"	104.39 lbs	
						214.13 lbs	

3.75x7.5x24 Tqr — **HIGHWAY REBAR**

Unit Dims	Bar Mark	Qnty	Size	Length	Dim "A"	Bar Weight	Remarks
H=3'9"	H-1	3 ea	#7	7'2"		43.95 lbs	
W=7'6"	U-1	24 ea	#3	5'0"		45.12 lbs	
S=24'0"	V-2	6 ea	#4	3'5"		13.69 lbs	
SH=3'9"	S-1	4 ea	#4	4'0 1/4"		10.74 lbs	
	TB-1	4 ea	#5	27'0 1/4"	23'4 3/4"	112.73 lbs	
						226.23 lbs	

3.75x7.5x26 Tqr — **HIGHWAY REBAR**

Unit Dims	Bar Mark	Qnty	Size	Length	Dim "A"	Bar Weight	Remarks
H=3'9"	H-1	3 ea	#7	7'2"		43.95 lbs	
W=7'6"	U-1	26 ea	#3	5'0"		48.88 lbs	
S=26'0"	V-2	6 ea	#4	3'5"		13.69 lbs	
SH=3'9"	S-1	4 ea	#4	4'0 1/4"		10.74 lbs	
	TB-1	4 ea	#6	29'0 1/4"	25'4 3/4"	174.36 lbs	
						291.62 lbs	

3.75x7.5x28 Tqr — **HIGHWAY REBAR**

Unit Dims	Bar Mark	Qnty	Size	Length	Dim "A"	Bar Weight	Remarks
H=3'9"	H-1	3 ea	#7	7'2"		43.95 lbs	
W=7'6"	U-1	28 ea	#3	5'0"		52.64 lbs	
S=28'0"	V-2	6 ea	#4	3'5"		13.69 lbs	
SH=3'9"	S-1	4 ea	#4	4'0 1/4"		10.74 lbs	
	TB-1	4 ea	#6	31'0 1/4"	27'4 3/4"	186.37 lbs	
						307.40 lbs	

3.75x7.5x30 Tqr — **HIGHWAY REBAR**

Unit Dims	Bar Mark	Qnty	Size	Length	Dim "A"	Bar Weight	Remarks
H=3'9"	H-1	3 ea	#7	7'2"		43.95 lbs	
W=7'6"	U-1	30 ea	#3	5'0"		56.40 lbs	
S=30'0"	V-2	6 ea	#4	3'5"		13.69 lbs	
SH=3'9"	S-1	4 ea	#4	4'0 1/4"		10.74 lbs	
	TB-1	4 ea	#6	33'0 1/4"	29'4 3/4"	198.39 lbs	
						323.17 lbs	

3.75x7.5x32 Tqr — **HIGHWAY REBAR**

Unit Dims	Bar Mark	Qnty	Size	Length	Dim "A"	Bar Weight	Remarks
H=3'9"	H-1	3 ea	#7	7'2"		43.95 lbs	
W=7'6"	U-1	32 ea	#3	5'0"		60.16 lbs	
S=32'0"	V-2	6 ea	#4	3'5"		13.69 lbs	
SH=3'9"	S-1	4 ea	#4	4'0 1/4"		10.74 lbs	
	TB-1	4 ea	#6	35'0 1/4"	31'4 3/4"	210.41 lbs	
						338.95 lbs	

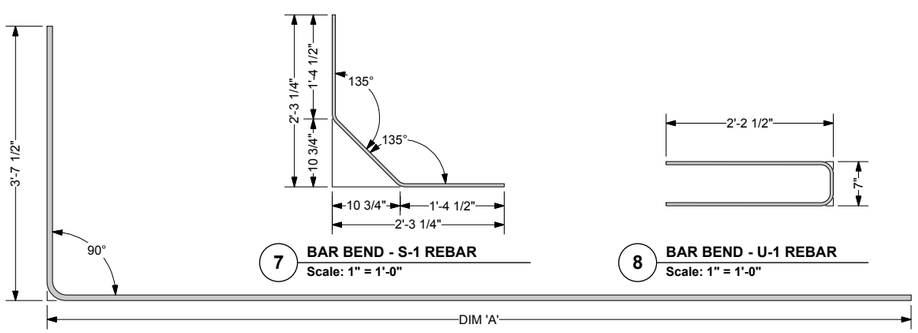

6 **BAR BEND - TB-1 REBAR**
Scale: 1" = 1'-0"

7 **BAR BEND - S-1 REBAR**
Scale: 1" = 1'-0"

8 **BAR BEND - U-1 REBAR**
Scale: 1" = 1'-0"

4/13/2017

DESIGNER

THE NEEL COMPANY
8328-D TRAFORD LANE
SPRINGFIELD, VA 22152
PH: (703) 913-7858
FX: (703) 913-7859
Web: www.neelco.com

This drawing contains information proprietary to The Neel Company. The Neel Company is the exclusive licensee of the T-WALL® patent. ©2017, The Neel Company

DATE:	03-23-17
SCALE:	AS NOTED
DESIGNED:	JMC
DRAWN:	CJW
CHECKED:	CCG/KD
TNC JOB #:	TW3634
TNC SHT #36 OF 67	

PA DOT DWG # 87-402 PE (REVISION IV)

COMMONWEALTH OF PENNSYLVANIA
DEPARTMENT OF TRANSPORTATION
BUREAU OF PROJECT DELIVERY

T-WALL® STANDARDS
PREFABRICATED T-WALL® RETAINING WALL SYSTEM

SHOP DRAWINGS
REBAR
THREE QUARTER UNIT (II)

SHEET 36 OF 67

87-402 PE

DATE: 03-23-17 TNC JOB #: TW3634 PLOT DATE AND TIME: Wednesday, March 22, 2017 15:48:56 CAD FILE NAME: 035 Rebar - RWY Tqr r4-0.vwx

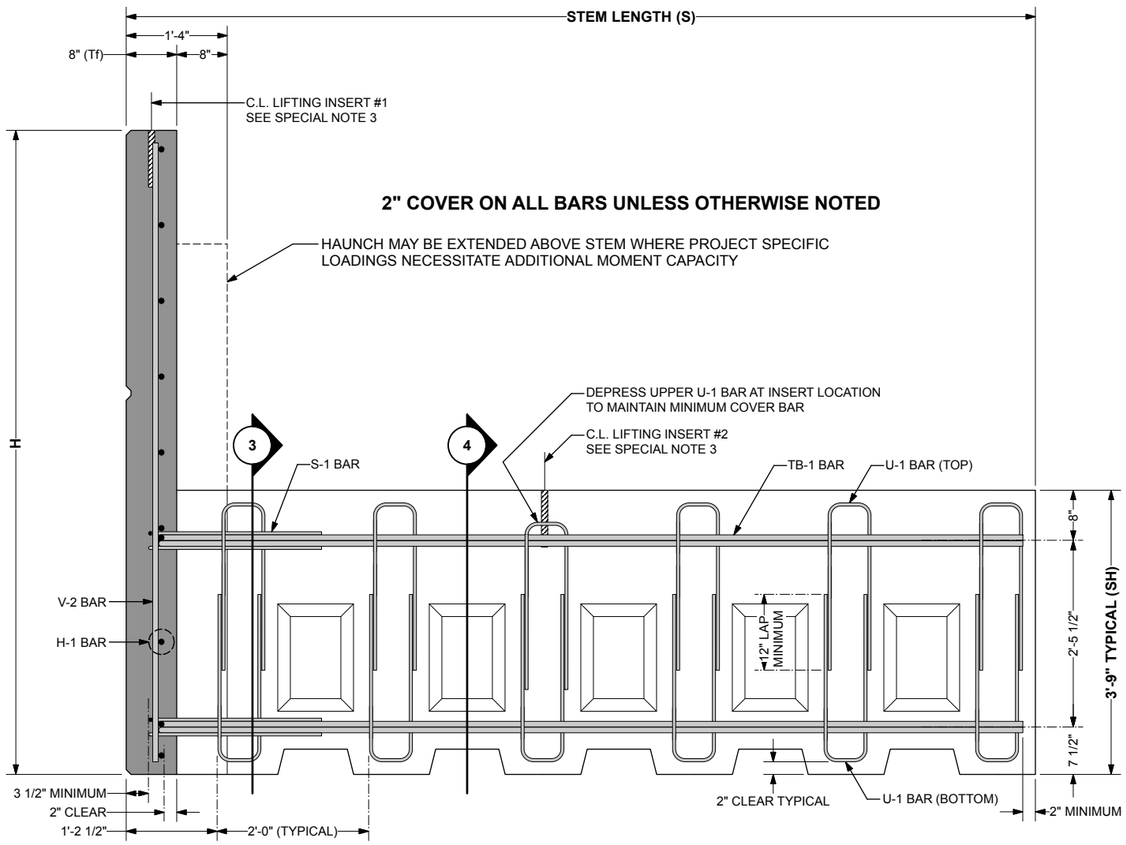

1 **SIDE VIEW - THREE QUARTER TOP UNITS (8.5 x 7.5 x 12 Tqr Top SHOWN)**
Scale: 1" = 1'-0"

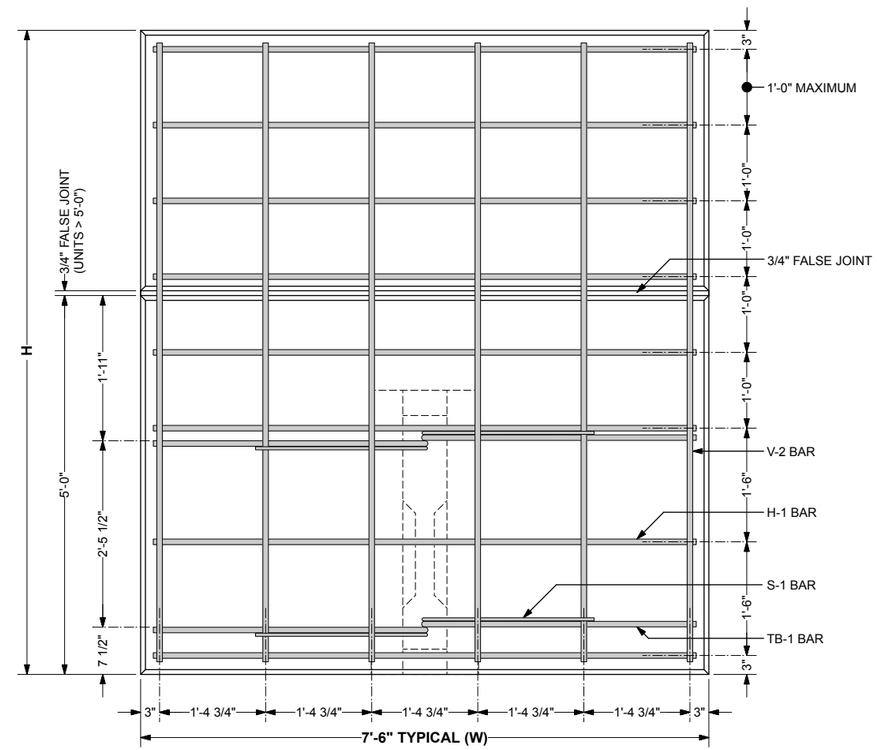

2 **FRONT VIEW - THREE QUARTER TOP UNITS (8.5 x 7.5 x 12 Tqr Top SHOWN)**
Scale: 1" = 1'-0"
(U-1 BARS IN STEM OMITTED FOR CLARITY)

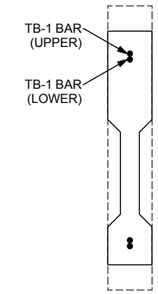

4 **SECTION THROUGH STEM**
Scale: 1" = 1'-0"

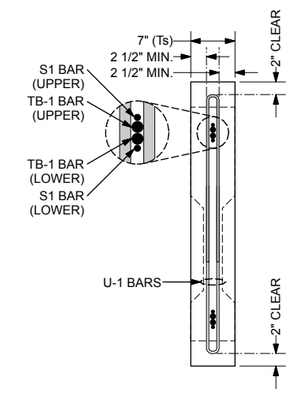

3 **SECTION THROUGH STEM**
Scale: 1" = 1'-0"

PA DOT DWG # 87-402 PE (REVISION IV)

COMMONWEALTH OF PENNSYLVANIA
DEPARTMENT OF TRANSPORTATION
BUREAU OF PROJECT DELIVERY

T-WALL® STANDARDS
PREFABRICATED T-WALL® RETAINING WALL SYSTEM

SHOP DRAWINGS
REBAR
THREE QUARTER TOP UNIT (I)

4/13/2017

DESIGNER

THE NEEL COMPANY
8328-D TRAFORD LANE
SPRINGFIELD, VA 22152
PH: (703) 913-7858
FX: (703) 913-7859
Web: www.neelco.com

This drawing contains information proprietary to The Neel Company. The Neel Company is the exclusive licensee of the T-WALL® patent. ©2017, The Neel Company

DATE:	03-23-17
SCALE:	AS NOTED
DESIGNED:	JMC
DRAWN:	CJW
CHECKED:	CCG/KD
TNC JOB #:	TW3634
TNC SHT #	37 OF 67

SHEET 37 OF 67

87-402 PE

DATE: 03-23-17 TNC JOB #: TW3634 PLOT DATE AND TIME: Wednesday, March 22, 2017 15:48:48 CAD FILE NAME: 037 Rebar - RWY Tqr Top r4-0.vwx

SPECIAL NOTES:

1. FRONT FACE OF T-WALL® UNITS FINISH TREATMENT:
   - PER CONTRACT DRAWINGS AND SPECS.
   - MINIMUM FRONT FACE THICKNESS SHALL BE 8"
2. TOP & BOTTOM SHEAR KEY BLOCKOUTS MAY BE LEFT OUT IN AN ALTERNATING PATTERN WHEN STEM LENGTHS BECOME LONGER THAN 12 FT (SPACED AT 2'-0"). ALL BLOCKOUTS ARE REQUIRED IN THE STEM FOR THE FIRST 12 FT OF LENGTH. REGARDLESS OF OVERALL LENGTH.
3. LIFTING INSERTS:
   - MEADOW BURKE RAPID LIFT RL-22 LIFTING INSERT WITH RL-32 REBAR OR DAYTON SUPERIOR P-53 5-TON SWIFT LIFT EYE WITH P-60 TENSION BAR.
   - 8000 LBS (4 TONS) MINIMUM RATED WORKING LOAD CAPACITY.
   - REFER TO LIFTING INSERT DATA TABLE FOR INSERT LOCATIONS.
   - LIFTING INSERTS TO BE GALVANIZED.

GENERAL NOTES:

1. PRIMARY REFERENCE: AASHTO LRFD BRIDGE SPECIFICATIONS, 5th EDITION, 2010 WITH INTERIM REVISIONS
2. MINIMUM CONCRETE COVER IS DESIGNED FOR 2" ON ALL BARS. TOLERANCES PER CONSTRUCTION SPECIFICATIONS SECTION 2.0.
3. ALL MATERIAL AND TOLERANCES IN ACCORDS TO T-WALL® CONSTRUCTION SPECIFICATIONS, SECTION 2.0 MATERIALS.
4. REBAR:
   - SEE CONSTRUCTION SPECIFICATION, SECTION 2.0 MATERIALS OR PER CONTRACT DRAWINGS AND SPECS.
5. CONCRETE:
   - F'c = 5000 psi @ 28 DAYS

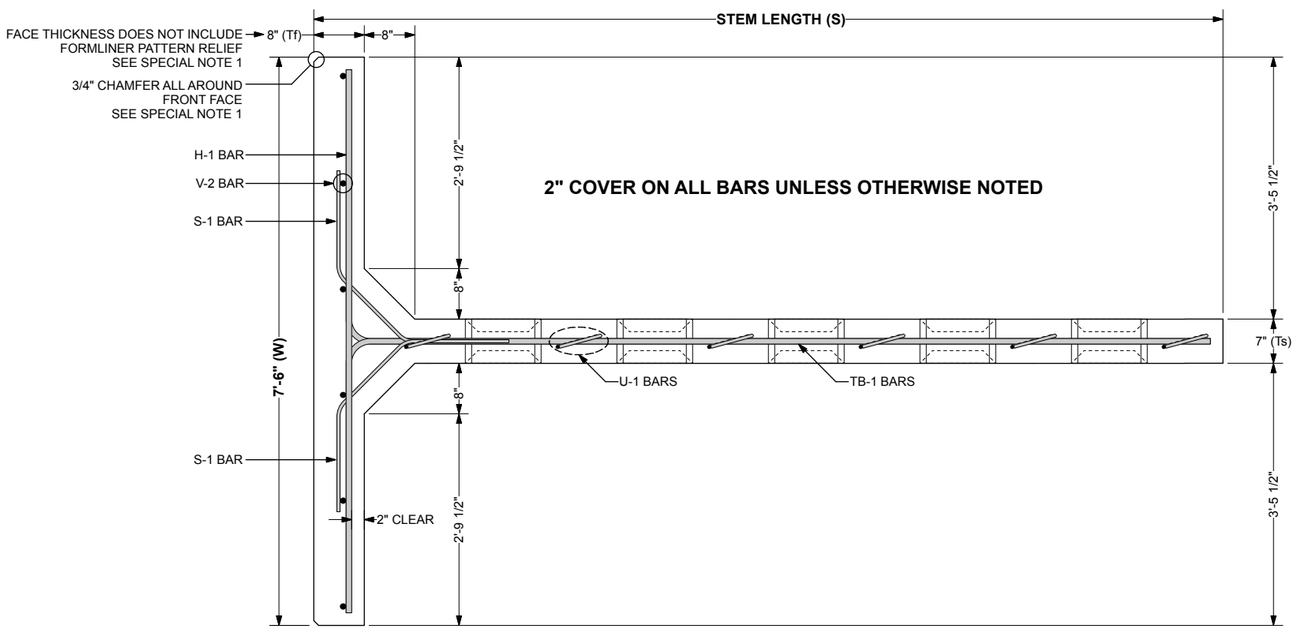

5 **PLAN VIEW AT STEM - THREE QUARTER TOP UNITS (12'-0" STEM SHOWN)**
Scale: 1" = 1'-0"

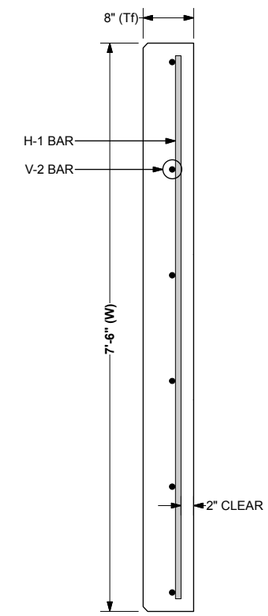

6 **PLAN VIEW - EXTENDED FACE PANEL**
Scale: 1" = 1'-0"

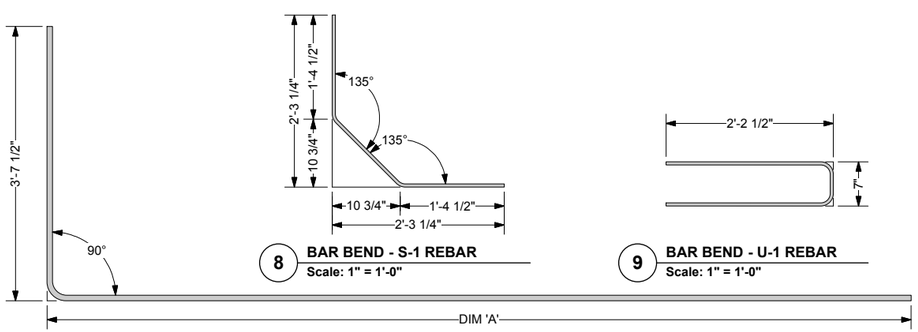

7 **BAR BEND - TB-1 REBAR**
Scale: 1" = 1'-0"

8 **BAR BEND - S-1 REBAR**
Scale: 1" = 1'-0"

9 **BAR BEND - U-1 REBAR**
Scale: 1" = 1'-0"

4/13/2017

DESIGNER

THE NEEL COMPANY
8328-D TRAFORD LANE
SPRINGFIELD, VA 22152
PH: (703) 913-7858
FX: (703) 913-7859
Web: www.neelco.com

This drawing contains information proprietary to The Neel Company. The Neel Company is the exclusive licensee of the T-WALL® patent. ©2017, The Neel Company

DATE:	03-23-17
SCALE:	AS NOTED
DESIGNED:	JMC
DRAWN:	CJW
CHECKED:	CCG/KD
TNC JOB #:	TW3634
TNC SHT #	38 OF 67

PA DOT DWG # 87-402 PE (REVISION IV)

COMMONWEALTH OF PENNSYLVANIA
DEPARTMENT OF TRANSPORTATION
BUREAU OF PROJECT DELIVERY

T-WALL® STANDARDS
PREFABRICATED T-WALL® RETAINING WALL SYSTEM

SHOP DRAWINGS
REBAR
THREE QUARTER TOP UNIT (II)

DATE: 03-23-17 TNC JOB #: TW3634 PLOT DATE AND TIME: Wednesday, March 22, 2017 15:48:48 CAD FILE NAME: 037 Rebar - RWY Tqr Top r4-0.vwx

REBAR SCHEDULES

4.0x7.5x06 Tqr Top — **HIGHWAY REBAR**

Unit Dims	Bar Mark	Qnty	Size	Length	Dim "A"	Bar Weight	Remarks
H=4'0"	H-1	4 ea	#4	7'2"		19.15 lbs	
W=7'6"	U-1	6 ea	#3	5'0"		11.28 lbs	
S=6'0"	V-2	6 ea	#5	3'8"		22.95 lbs	
SH=3'9"	S-1	4 ea	#4	4'0 1/4"		10.74 lbs	
	TB-1	4 ea	#4	9'0 1/4"	5'4 3/4"	24.10 lbs	
						88.22 lbs	

4.5x7.5x06 Tqr Top — **HIGHWAY REBAR**

Unit Dims	Bar Mark	Qnty	Size	Length	Dim "A"	Bar Weight	Remarks
H=4'6"	H-1	4 ea	#4	7'2"		19.15 lbs	
W=7'6"	U-1	6 ea	#3	5'0"		11.28 lbs	
S=6'0"	V-2	6 ea	#5	4'2"		26.08 lbs	
SH=3'9"	S-1	4 ea	#4	4'0 1/4"		10.74 lbs	
	TB-1	4 ea	#4	9'0 1/4"	5'4 3/4"	24.10 lbs	
						91.35 lbs	

5.0x7.5x06 Tqr Top — **HIGHWAY REBAR**

Unit Dims	Bar Mark	Qnty	Size	Length	Dim "A"	Bar Weight	Remarks
H=5'0"	H-1	5 ea	#4	7'2"		23.94 lbs	
W=7'6"	U-1	6 ea	#3	5'0"		11.28 lbs	
S=6'0"	V-2	6 ea	#5	4'8"		29.20 lbs	
SH=3'9"	S-1	4 ea	#4	4'0 1/4"		10.74 lbs	
	TB-1	4 ea	#4	9'0 1/4"	5'4 3/4"	24.10 lbs	
						99.27 lbs	

5.5x7.5x06 Tqr Top — **HIGHWAY REBAR**

Unit Dims	Bar Mark	Qnty	Size	Length	Dim "A"	Bar Weight	Remarks
H=5'6"	H-1	5 ea	#4	7'2"		23.94 lbs	
W=7'6"	U-1	6 ea	#3	5'0"		11.28 lbs	
S=6'0"	V-2	6 ea	#5	5'2"		32.33 lbs	
SH=3'9"	S-1	4 ea	#4	4'0 1/4"		10.74 lbs	
	TB-1	4 ea	#4	9'0 1/4"	5'4 3/4"	24.10 lbs	
						102.40 lbs	

6.0x7.5x06 Tqr Top — **HIGHWAY REBAR**

Unit Dims	Bar Mark	Qnty	Size	Length	Dim "A"	Bar Weight	Remarks
H=6'0"	H-1	6 ea	#4	7'2"		28.72 lbs	
W=7'6"	U-1	6 ea	#3	5'0"		11.28 lbs	
S=6'0"	V-2	6 ea	#5	5'8"		35.46 lbs	
SH=3'9"	S-1	4 ea	#4	4'0 1/4"		10.74 lbs	
	TB-1	4 ea	#4	9'0 1/4"	5'4 3/4"	24.10 lbs	
						110.31 lbs	

6.5x7.5x06 Tqr Top — **HIGHWAY REBAR**

Unit Dims	Bar Mark	Qnty	Size	Length	Dim "A"	Bar Weight	Remarks
H=6'6"	H-1	6 ea	#4	7'2"		28.72 lbs	
W=7'6"	U-1	6 ea	#3	5'0"		11.28 lbs	
S=6'0"	V-2	6 ea	#5	6'2"		38.59 lbs	
SH=3'9"	S-1	4 ea	#4	4'0 1/4"		10.74 lbs	
	TB-1	4 ea	#5	9'0 1/4"	5'4 3/4"	37.63 lbs	
						126.97 lbs	

7.0x7.5x06 Tqr Top — **HIGHWAY REBAR**

Unit Dims	Bar Mark	Qnty	Size	Length	Dim "A"	Bar Weight	Remarks
H=7'0"	H-1	7 ea	#4	7'2"		33.51 lbs	
W=7'6"	U-1	6 ea	#3	5'0"		11.28 lbs	
S=6'0"	V-2	6 ea	#5	6'8"		41.72 lbs	
SH=3'9"	S-1	4 ea	#4	4'0 1/4"		10.74 lbs	
	TB-1	4 ea	#5	9'0 1/4"	5'4 3/4"	37.63 lbs	
						134.89 lbs	

7.5x7.5x06 Tqr Top — **HIGHWAY REBAR**

Unit Dims	Bar Mark	Qnty	Size	Length	Dim "A"	Bar Weight	Remarks
H=7'6"	H-1	7 ea	#4	7'2"		33.51 lbs	
W=7'6"	U-1	6 ea	#3	5'0"		11.28 lbs	
S=6'0"	V-2	6 ea	#5	7'2"		44.85 lbs	
SH=3'9"	S-1	4 ea	#4	4'0 1/4"		10.74 lbs	
	TB-1	4 ea	#5	9'0 1/4"	5'4 3/4"	37.63 lbs	
						138.02 lbs	

8.0x7.5x06 Tqr Top — **HIGHWAY REBAR**

Unit Dims	Bar Mark	Qnty	Size	Length	Dim "A"	Bar Weight	Remarks
H=8'0"	H-1	8 ea	#4	7'2"		38.30 lbs	
W=7'6"	U-1	6 ea	#3	5'0"		11.28 lbs	
S=6'0"	V-2	6 ea	#6	7'8"		69.09 lbs	
SH=3'9"	S-1	4 ea	#4	4'0 1/4"		10.74 lbs	
	TB-1	4 ea	#6	9'0 1/4"	5'4 3/4"	54.20 lbs	
						183.61 lbs	

8.5x7.5x06 Tqr Top — **HIGHWAY REBAR**

Unit Dims	Bar Mark	Qnty	Size	Length	Dim "A"	Bar Weight	Remarks
H=8'6"	H-1	8 ea	#4	7'2"		38.30 lbs	
W=7'6"	U-1	6 ea	#3	5'0"		11.28 lbs	
S=6'0"	V-2	6 ea	#7	8'2"		100.16 lbs	
SH=3'9"	S-1	4 ea	#4	4'0 1/4"		10.74 lbs	
	TB-1	4 ea	#6	9'0 1/4"	5'4 3/4"	54.20 lbs	
						214.68 lbs	

T-WALL UNIT PROPERTIES

UNIT TYPE	H	W	S	Tf*	SH	VOLUME*	WEIGHT*
4.0x7.5x06 Tqr Top	4'0"	7'6"	6'0"	8"	3'9"	1.17 cy	4,733 lbs
4.5x7.5x06 Tqr Top	4'6"	7'6"	6'0"	8"	3'9"	1.26 cy	5,108 lbs
5.0x7.5x06 Tqr Top	5'0"	7'6"	6'0"	8"	3'9"	1.35 cy	5,483 lbs
5.5x7.5x06 Tqr Top	5'6"	7'6"	6'0"	8"	3'9"	1.45 cy	5,858 lbs
6.0x7.5x06 Tqr Top	6'0"	7'6"	6'0"	8"	3'9"	1.54 cy	6,233 lbs
6.5x7.5x06 Tqr Top	6'6"	7'6"	6'0"	8"	3'9"	1.63 cy	6,608 lbs
7.0x7.5x06 Tqr Top	7'0"	7'6"	6'0"	8"	3'9"	1.72 cy	6,983 lbs
7.5x7.5x06 Tqr Top	7'6"	7'6"	6'0"	8"	3'9"	1.82 cy	7,358 lbs
8.0x7.5x06 Tqr Top	8'0"	7'6"	6'0"	8"	3'9"	1.91 cy	7,733 lbs
8.5x7.5x06 Tqr Top	8'6"	7'6"	6'0"	8"	3'9"	2.00 cy	8,108 lbs

*** VOLUMES AND WEIGHTS ON THIS TABLE ARE BASED ON 8" FACE THICKNESS (Tf)**
FORMLINER FINISHES MAY INCREASE FACE THICKNESS, VOLUME AND WEIGHT.

LIFTING INSERT DATA

UNIT TYPE	DISTANCE TO CENTROID FROM FRONT FACE	DISTANCE TO INSERT #1 FROM FRONT FACE	DISTANCE TO INSERT #2 FROM FRONT FACE
4.0x7.5x06 Tqr Top	1'3 5/8"	4"	3'6"
4.5x7.5x06 Tqr Top	1'2 3/4"	4"	1'6"
5.0x7.5x06 Tqr Top	1'2"	4"	1'6"
5.5x7.5x06 Tqr Top	1'1 3/8"	4"	1'6"
6.0x7.5x06 Tqr Top	1'0 3/4"	4"	1'6"
6.5x7.5x06 Tqr Top	1'0 1/4"	4"	1'6"
7.0x7.5x06 Tqr Top	11 7/8"	4"	1'6"
7.5x7.5x06 Tqr Top	11 1/2"	4"	1'6"
8.0x7.5x06 Tqr Top	11 1/8"	4"	1'6"
8.5x7.5x06 Tqr Top	10 7/8"	4"	1'6"

PA DOT DWG # 87-402 PE (REVISION IV)

COMMONWEALTH OF PENNSYLVANIA
DEPARTMENT OF TRANSPORTATION
BUREAU OF PROJECT DELIVERY

T-WALL® STANDARDS
PREFABRICATED T-WALL® RETAINING WALL SYSTEM

SHOP DRAWINGS
REBAR
THREE QUARTER TOP UNIT (III)

4/13/2017

DESIGNER

THE NEEL COMPANY
8328-D TRAFORD LANE
SPRINGFIELD, VA 22152
PH: (703) 913-7858
FX: (703) 913-7859
Web: www.neelco.com

This drawing contains information proprietary to The Neel Company. The Neel Company is the exclusive licensee of the T-WALL® patent. ©2017, The Neel Company

DATE: 03-23-17
SCALE: NO SCALE
DESIGNED: JMC
DRAWN: CJW
CHECKED: CCG/KD
TNC JOB #: TW3634
TNC SHT #39 OF 67

DATE: 03-23-17 TNC JOB #: TW3634 PLOT DATE AND TIME: Wednesday, March 22, 2017 15:48:48 CAD FILE NAME: 037 Rebar - RWY Tqr Top r4-0.vwx

REBAR SCHEDULES

4.0x7.5x08 Tqr Top — **HIGHWAY REBAR**

Unit Dims	Bar Mark	Qnty	Size	Length	Dim "A"	Bar Weight	Remarks
H=4'0"	H-1	4 ea	#4	7'2"		19.15 lbs	
W=7'6"	U-1	8 ea	#3	5'0"		15.04 lbs	
S=8'0"	V-2	6 ea	#5	3'8"		22.95 lbs	
SH=3'9"	S-1	4 ea	#4	4'0 1/4"		10.74 lbs	
	TB-1	4 ea	#4	11'0 1/4"	7'4 3/4"	29.45 lbs	
						97.33 lbs	

4.5x7.5x08 Tqr Top — **HIGHWAY REBAR**

Unit Dims	Bar Mark	Qnty	Size	Length	Dim "A"	Bar Weight	Remarks
H=4'6"	H-1	4 ea	#4	7'2"		19.15 lbs	
W=7'6"	U-1	8 ea	#3	5'0"		15.04 lbs	
S=8'0"	V-2	6 ea	#5	4'2"		26.08 lbs	
SH=3'9"	S-1	4 ea	#4	4'0 1/4"		10.74 lbs	
	TB-1	4 ea	#4	11'0 1/4"	7'4 3/4"	29.45 lbs	
						100.46 lbs	

5.0x7.5x08 Tqr Top — **HIGHWAY REBAR**

Unit Dims	Bar Mark	Qnty	Size	Length	Dim "A"	Bar Weight	Remarks
H=5'0"	H-1	5 ea	#4	7'2"		23.94 lbs	
W=7'6"	U-1	8 ea	#3	5'0"		15.04 lbs	
S=8'0"	V-2	6 ea	#5	4'8"		29.20 lbs	
SH=3'9"	S-1	4 ea	#4	4'0 1/4"		10.74 lbs	
	TB-1	4 ea	#4	11'0 1/4"	7'4 3/4"	29.45 lbs	
						108.37 lbs	

5.5x7.5x08 Tqr Top — **HIGHWAY REBAR**

Unit Dims	Bar Mark	Qnty	Size	Length	Dim "A"	Bar Weight	Remarks
H=5'6"	H-1	5 ea	#4	7'2"		23.94 lbs	
W=7'6"	U-1	8 ea	#3	5'0"		15.04 lbs	
S=8'0"	V-2	6 ea	#5	5'2"		32.33 lbs	
SH=3'9"	S-1	4 ea	#4	4'0 1/4"		10.74 lbs	
	TB-1	4 ea	#4	11'0 1/4"	7'4 3/4"	29.45 lbs	
						111.50 lbs	

6.0x7.5x08 Tqr Top — **HIGHWAY REBAR**

Unit Dims	Bar Mark	Qnty	Size	Length	Dim "A"	Bar Weight	Remarks
H=6'0"	H-1	6 ea	#4	7'2"		28.72 lbs	
W=7'6"	U-1	8 ea	#3	5'0"		15.04 lbs	
S=8'0"	V-2	6 ea	#5	5'8"		35.46 lbs	
SH=3'9"	S-1	4 ea	#4	4'0 1/4"		10.74 lbs	
	TB-1	4 ea	#4	11'0 1/4"	7'4 3/4"	29.45 lbs	
						119.42 lbs	

6.5x7.5x08 Tqr Top — **HIGHWAY REBAR**

Unit Dims	Bar Mark	Qnty	Size	Length	Dim "A"	Bar Weight	Remarks
H=6'6"	H-1	6 ea	#4	7'2"		28.72 lbs	
W=7'6"	U-1	8 ea	#3	5'0"		15.04 lbs	
S=8'0"	V-2	6 ea	#5	6'2"		38.59 lbs	
SH=3'9"	S-1	4 ea	#4	4'0 1/4"		10.74 lbs	
	TB-1	4 ea	#5	11'0 1/4"	7'4 3/4"	45.98 lbs	
						139.08 lbs	

7.0x7.5x08 Tqr Top — **HIGHWAY REBAR**

Unit Dims	Bar Mark	Qnty	Size	Length	Dim "A"	Bar Weight	Remarks
H=7'0"	H-1	7 ea	#4	7'2"		33.51 lbs	
W=7'6"	U-1	8 ea	#3	5'0"		15.04 lbs	
S=8'0"	V-2	6 ea	#5	6'8"		41.72 lbs	
SH=3'9"	S-1	4 ea	#4	4'0 1/4"		10.74 lbs	
	TB-1	4 ea	#5	11'0 1/4"	7'4 3/4"	45.98 lbs	
						146.99 lbs	

7.5x7.5x08 Tqr Top — **HIGHWAY REBAR**

Unit Dims	Bar Mark	Qnty	Size	Length	Dim "A"	Bar Weight	Remarks
H=7'6"	H-1	7 ea	#4	7'2"		33.51 lbs	
W=7'6"	U-1	8 ea	#3	5'0"		15.04 lbs	
S=8'0"	V-2	6 ea	#5	7'2"		44.85 lbs	
SH=3'9"	S-1	4 ea	#4	4'0 1/4"		10.74 lbs	
	TB-1	4 ea	#5	11'0 1/4"	7'4 3/4"	45.98 lbs	
						150.12 lbs	

8.0x7.5x08 Tqr Top — **HIGHWAY REBAR**

Unit Dims	Bar Mark	Qnty	Size	Length	Dim "A"	Bar Weight	Remarks
H=8'0"	H-1	8 ea	#4	7'2"		38.30 lbs	
W=7'6"	U-1	8 ea	#3	5'0"		15.04 lbs	
S=8'0"	V-2	6 ea	#6	7'8"		69.09 lbs	
SH=3'9"	S-1	4 ea	#4	4'0 1/4"		10.74 lbs	
	TB-1	4 ea	#6	11'0 1/4"	7'4 3/4"	66.21 lbs	
						199.39 lbs	

8.5x7.5x08 Tqr Top — **HIGHWAY REBAR**

Unit Dims	Bar Mark	Qnty	Size	Length	Dim "A"	Bar Weight	Remarks
H=8'6"	H-1	8 ea	#4	7'2"		38.30 lbs	
W=7'6"	U-1	8 ea	#3	5'0"		15.04 lbs	
S=8'0"	V-2	6 ea	#7	8'2"		100.16 lbs	
SH=3'9"	S-1	4 ea	#4	4'0 1/4"		10.74 lbs	
	TB-1	4 ea	#6	11'0 1/4"	7'4 3/4"	66.21 lbs	
						230.45 lbs	

T-WALL UNIT PROPERTIES

UNIT TYPE	H	W	S	Tf*	SH	VOLUME*	WEIGHT*
4.0x7.5x08 Tqr Top	4'0"	7'6"	8'0"	8"	3'9"	1.30 cy	5,256 lbs
4.5x7.5x08 Tqr Top	4'6"	7'6"	8'0"	8"	3'9"	1.39 cy	5,631 lbs
5.0x7.5x08 Tqr Top	5'0"	7'6"	8'0"	8"	3'9"	1.48 cy	6,006 lbs
5.5x7.5x08 Tqr Top	5'6"	7'6"	8'0"	8"	3'9"	1.58 cy	6,381 lbs
6.0x7.5x08 Tqr Top	6'0"	7'6"	8'0"	8"	3'9"	1.67 cy	6,756 lbs
6.5x7.5x08 Tqr Top	6'6"	7'6"	8'0"	8"	3'9"	1.76 cy	7,131 lbs
7.0x7.5x08 Tqr Top	7'0"	7'6"	8'0"	8"	3'9"	1.85 cy	7,506 lbs
7.5x7.5x08 Tqr Top	7'6"	7'6"	8'0"	8"	3'9"	1.95 cy	7,881 lbs
8.0x7.5x08 Tqr Top	8'0"	7'6"	8'0"	8"	3'9"	2.04 cy	8,256 lbs
8.5x7.5x08 Tqr Top	8'6"	7'6"	8'0"	8"	3'9"	2.13 cy	8,631 lbs

*** VOLUMES AND WEIGHTS ON THIS TABLE ARE BASED ON 8" FACE THICKNESS (Tf)**
FORMLINER FINISHES MAY INCREASE FACE THICKNESS, VOLUME AND WEIGHT.

LIFTING INSERT DATA

UNIT TYPE	DISTANCE TO CENTROID FROM FRONT FACE	DISTANCE TO INSERT #1 FROM FRONT FACE	DISTANCE TO INSERT #2 FROM FRONT FACE
4.0x7.5x08 Tqr Top	1'10 5/8"	4"	3'6"
4.5x7.5x08 Tqr Top	1'9 3/8"	4"	3'6"
5.0x7.5x08 Tqr Top	1'8 1/4"	4"	3'6"
5.5x7.5x08 Tqr Top	1'7 1/4"	4"	3'6"
6.0x7.5x08 Tqr Top	1'6 3/8"	4"	3'6"
6.5x7.5x08 Tqr Top	1'5 1/2"	4"	3'6"
7.0x7.5x08 Tqr Top	1'4 7/8"	4"	3'6"
7.5x7.5x08 Tqr Top	1'4 1/4"	4"	3'6"
8.0x7.5x08 Tqr Top	1'3 5/8"	4"	3'6"
8.5x7.5x08 Tqr Top	1'3 1/8"	4"	3'6"

4/13/2017

DESIGNER

THE NEEL COMPANY
8328-D TRAFORD LANE
SPRINGFIELD, VA 22152
PH: (703) 913-7858
FX: (703) 913-7859
Web: www.neelco.com

This drawing contains information proprietary to The Neel Company. The Neel Company is the exclusive licensee of the T-WALL® patent. ©2017, The Neel Company

DATE: 03-23-17
SCALE: NO SCALE
DESIGNED: JMC
DRAWN: CJW
CHECKED: CCG/KD
TNC JOB #: TW3634
TNC SHT #:40 OF 67

PA DOT DWG # 87-402 PE (REVISION IV)

COMMONWEALTH OF PENNSYLVANIA
DEPARTMENT OF TRANSPORTATION
BUREAU OF PROJECT DELIVERY

T-WALL® STANDARDS
PREFABRICATED T-WALL® RETAINING WALL SYSTEM

SHOP DRAWINGS
REBAR
THREE QUARTER TOP UNIT (IV)

DATE: 03-23-17 TNC JOB #: TW3634 PLOT DATE AND TIME: Wednesday, March 22, 2017 15:48:48 CAD FILE NAME: 037 Rebar - RWY Tqr Top r4-0.vwx

REBAR SCHEDULES

4.0x7.5x10 Tqr Top — **HIGHWAY REBAR**

Unit Dims	Bar Mark	Qnty	Size	Length	Dim "A"	Bar Weight	Remarks
H=4'0"	H-1	4 ea	#4	7'2"		19.15 lbs	
W=7'6"	U-1	10 ea	#3	5'0"		18.80 lbs	
S=10'0"	V-2	6 ea	#5	3'8"		22.95 lbs	
SH=3'9"	S-1	4 ea	#4	4'0 1/4"		10.74 lbs	
	TB-1	4 ea	#4	13'0 1/4"	9'4 3/4"	34.79 lbs	
						106.43 lbs	

4.5x7.5x10 Tqr Top — **HIGHWAY REBAR**

Unit Dims	Bar Mark	Qnty	Size	Length	Dim "A"	Bar Weight	Remarks
H=4'6"	H-1	4 ea	#4	7'2"		19.15 lbs	
W=7'6"	U-1	10 ea	#3	5'0"		18.80 lbs	
S=10'0"	V-2	6 ea	#5	4'2"		26.08 lbs	
SH=3'9"	S-1	4 ea	#4	4'0 1/4"		10.74 lbs	
	TB-1	4 ea	#4	13'0 1/4"	9'4 3/4"	34.79 lbs	
						109.56 lbs	

5.0x7.5x10 Tqr Top — **HIGHWAY REBAR**

Unit Dims	Bar Mark	Qnty	Size	Length	Dim "A"	Bar Weight	Remarks
H=5'0"	H-1	5 ea	#4	7'2"		23.94 lbs	
W=7'6"	U-1	10 ea	#3	5'0"		18.80 lbs	
S=10'0"	V-2	6 ea	#5	4'8"		29.20 lbs	
SH=3'9"	S-1	4 ea	#4	4'0 1/4"		10.74 lbs	
	TB-1	4 ea	#4	13'0 1/4"	9'4 3/4"	34.79 lbs	
						117.48 lbs	

5.5x7.5x10 Tqr Top — **HIGHWAY REBAR**

Unit Dims	Bar Mark	Qnty	Size	Length	Dim "A"	Bar Weight	Remarks
H=5'6"	H-1	5 ea	#4	7'2"		23.94 lbs	
W=7'6"	U-1	10 ea	#3	5'0"		18.80 lbs	
S=10'0"	V-2	6 ea	#5	5'2"		32.33 lbs	
SH=3'9"	S-1	4 ea	#4	4'0 1/4"		10.74 lbs	
	TB-1	4 ea	#4	13'0 1/4"	9'4 3/4"	34.79 lbs	
						120.61 lbs	

6.0x7.5x10 Tqr Top — **HIGHWAY REBAR**

Unit Dims	Bar Mark	Qnty	Size	Length	Dim "A"	Bar Weight	Remarks
H=6'0"	H-1	6 ea	#4	7'2"		28.72 lbs	
W=7'6"	U-1	10 ea	#3	5'0"		18.80 lbs	
S=10'0"	V-2	6 ea	#5	5'8"		35.46 lbs	
SH=3'9"	S-1	4 ea	#4	4'0 1/4"		10.74 lbs	
	TB-1	4 ea	#4	13'0 1/4"	9'4 3/4"	34.79 lbs	
						128.52 lbs	

6.5x7.5x10 Tqr Top — **HIGHWAY REBAR**

Unit Dims	Bar Mark	Qnty	Size	Length	Dim "A"	Bar Weight	Remarks
H=6'6"	H-1	6 ea	#4	7'2"		28.72 lbs	
W=7'6"	U-1	10 ea	#3	5'0"		18.80 lbs	
S=10'0"	V-2	6 ea	#5	6'2"		38.59 lbs	
SH=3'9"	S-1	4 ea	#4	4'0 1/4"		10.74 lbs	
	TB-1	4 ea	#5	13'0 1/4"	9'4 3/4"	54.32 lbs	
						151.18 lbs	

7.0x7.5x10 Tqr Top — **HIGHWAY REBAR**

Unit Dims	Bar Mark	Qnty	Size	Length	Dim "A"	Bar Weight	Remarks
H=7'0"	H-1	7 ea	#4	7'2"		33.51 lbs	
W=7'6"	U-1	10 ea	#3	5'0"		18.80 lbs	
S=10'0"	V-2	6 ea	#5	6'8"		41.72 lbs	
SH=3'9"	S-1	4 ea	#4	4'0 1/4"		10.74 lbs	
	TB-1	4 ea	#5	13'0 1/4"	9'4 3/4"	54.32 lbs	
						159.10 lbs	

7.5x7.5x10 Tqr Top — **HIGHWAY REBAR**

Unit Dims	Bar Mark	Qnty	Size	Length	Dim "A"	Bar Weight	Remarks
H=7'6"	H-1	7 ea	#4	7'2"		33.51 lbs	
W=7'6"	U-1	10 ea	#3	5'0"		18.80 lbs	
S=10'0"	V-2	6 ea	#5	7'2"		44.85 lbs	
SH=3'9"	S-1	4 ea	#4	4'0 1/4"		10.74 lbs	
	TB-1	4 ea	#5	13'0 1/4"	9'4 3/4"	54.32 lbs	
						162.23 lbs	

8.0x7.5x10 Tqr Top — **HIGHWAY REBAR**

Unit Dims	Bar Mark	Qnty	Size	Length	Dim "A"	Bar Weight	Remarks
H=8'0"	H-1	8 ea	#4	7'2"		38.30 lbs	
W=7'6"	U-1	10 ea	#3	5'0"		18.80 lbs	
S=10'0"	V-2	6 ea	#6	7'8"		69.09 lbs	
SH=3'9"	S-1	4 ea	#4	4'0 1/4"		10.74 lbs	
	TB-1	4 ea	#6	13'0 1/4"	9'4 3/4"	78.23 lbs	
						215.16 lbs	

8.5x7.5x10 Tqr Top — **HIGHWAY REBAR**

Unit Dims	Bar Mark	Qnty	Size	Length	Dim "A"	Bar Weight	Remarks
H=8'6"	H-1	8 ea	#4	7'2"		38.30 lbs	
W=7'6"	U-1	10 ea	#3	5'0"		18.80 lbs	
S=10'0"	V-2	6 ea	#7	8'2"		100.16 lbs	
SH=3'9"	S-1	4 ea	#4	4'0 1/4"		10.74 lbs	
	TB-1	4 ea	#6	13'0 1/4"	9'4 3/4"	78.23 lbs	
						246.23 lbs	

T-WALL UNIT PROPERTIES

UNIT TYPE	H	W	S	Tf*	SH	VOLUME*	WEIGHT*
4.0x7.5x10 Tqr Top	4'0"	7'6"	10'0"	8"	3'9"	1.43 cy	5,779 lbs
4.5x7.5x10 Tqr Top	4'6"	7'6"	10'0"	8"	3'9"	1.52 cy	6,154 lbs
5.0x7.5x10 Tqr Top	5'0"	7'6"	10'0"	8"	3'9"	1.61 cy	6,529 lbs
5.5x7.5x10 Tqr Top	5'6"	7'6"	10'0"	8"	3'9"	1.70 cy	6,904 lbs
6.0x7.5x10 Tqr Top	6'0"	7'6"	10'0"	8"	3'9"	1.80 cy	7,279 lbs
6.5x7.5x10 Tqr Top	6'6"	7'6"	10'0"	8"	3'9"	1.89 cy	7,654 lbs
7.0x7.5x10 Tqr Top	7'0"	7'6"	10'0"	8"	3'9"	1.98 cy	8,029 lbs
7.5x7.5x10 Tqr Top	7'6"	7'6"	10'0"	8"	3'9"	2.07 cy	8,404 lbs
8.0x7.5x10 Tqr Top	8'0"	7'6"	10'0"	8"	3'9"	2.17 cy	8,778 lbs
8.5x7.5x10 Tqr Top	8'6"	7'6"	10'0"	8"	3'9"	2.26 cy	9,154 lbs

*** VOLUMES AND WEIGHTS ON THIS TABLE ARE BASED ON 8" FACE THICKNESS (Tf)**
FORMLINER FINISHES MAY INCREASE FACE THICKNESS, VOLUME AND WEIGHT.

LIFTING INSERT DATA

UNIT TYPE	DISTANCE TO CENTROID FROM FRONT FACE	DISTANCE TO INSERT #1 FROM FRONT FACE	DISTANCE TO INSERT #2 FROM FRONT FACE
4.0x7.5x10 Tqr Top	2'6 5/8"	4"	5'6"
4.5x7.5x10 Tqr Top	2'4 7/8"	4"	5'6"
5.0x7.5x10 Tqr Top	2'3 3/8"	4"	5'6"
5.5x7.5x10 Tqr Top	2'2"	4"	3'6"
6.0x7.5x10 Tqr Top	2'0 3/4"	4"	3'6"
6.5x7.5x10 Tqr Top	1'11 3/4"	4"	3'6"
7.0x7.5x10 Tqr Top	1'10 3/4"	4"	3'6"
7.5x7.5x10 Tqr Top	1'9 7/8"	4"	3'6"
8.0x7.5x10 Tqr Top	1'9 1/8"	4"	3'6"
8.5x7.5x10 Tqr Top	1'8 3/8"	4"	3'6"

4/13/2017

PA DOT DWG # 87-402 PE (REVISION IV)

COMMONWEALTH OF PENNSYLVANIA
DEPARTMENT OF TRANSPORTATION
BUREAU OF PROJECT DELIVERY

T-WALL® STANDARDS
PREFABRICATED T-WALL® RETAINING WALL SYSTEM

SHOP DRAWINGS
REBAR
THREE QUARTER TOP UNIT (V)

DESIGNER
THE NEEL COMPANY
8328-D TRAFORD LANE
SPRINGFIELD, VA 22152
PH: (703) 913-7858
FX: (703) 913-7859
Web: www.neelco.com

This drawing contains information proprietary to The Neel Company. The Neel Company is the exclusive licensee of the T-WALL® patent. ©2017, The Neel Company

DATE: 03-23-17
SCALE: NO SCALE
DESIGNED: JMC
DRAWN: CJW
CHECKED: CCG/KD
TNC JOB #: TW3634
TNC SHT #:41 OF 67

DATE: 03-23-17 TNC JOB #: TW3634 PLOT DATE AND TIME: Wednesday, March 22, 2017 15:48:48 CAD FILE NAME: 037 Rebar - RWY Tqr Top r4-0.vwx

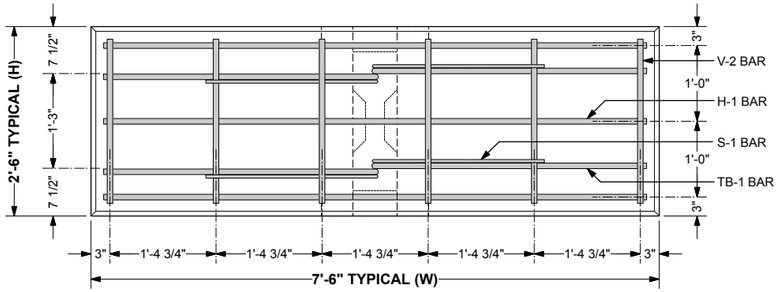

3 FRONT VIEW - 2.5 x 7.5 HALF UNIT
Scale: 1" = 1'-0"
(U-1 BARS IN STEM OMITTED FOR CLARITY)

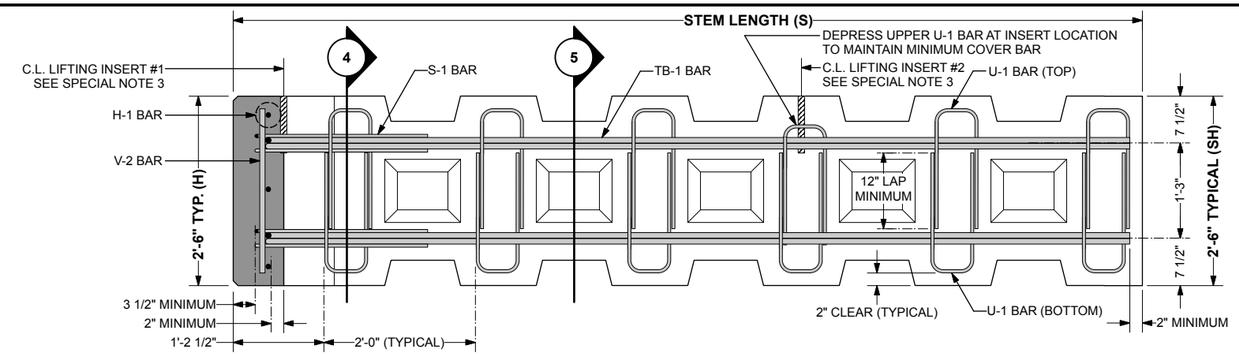

2 SIDE VIEW - 2.5 x 7.5 HALF UNIT (12'-0" STEM SHOWN)
Scale: 1" = 1'-0"

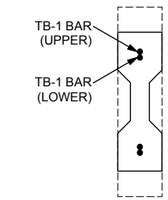

5 SECTION THROUGH STEM
Scale: 1" = 1'-0"

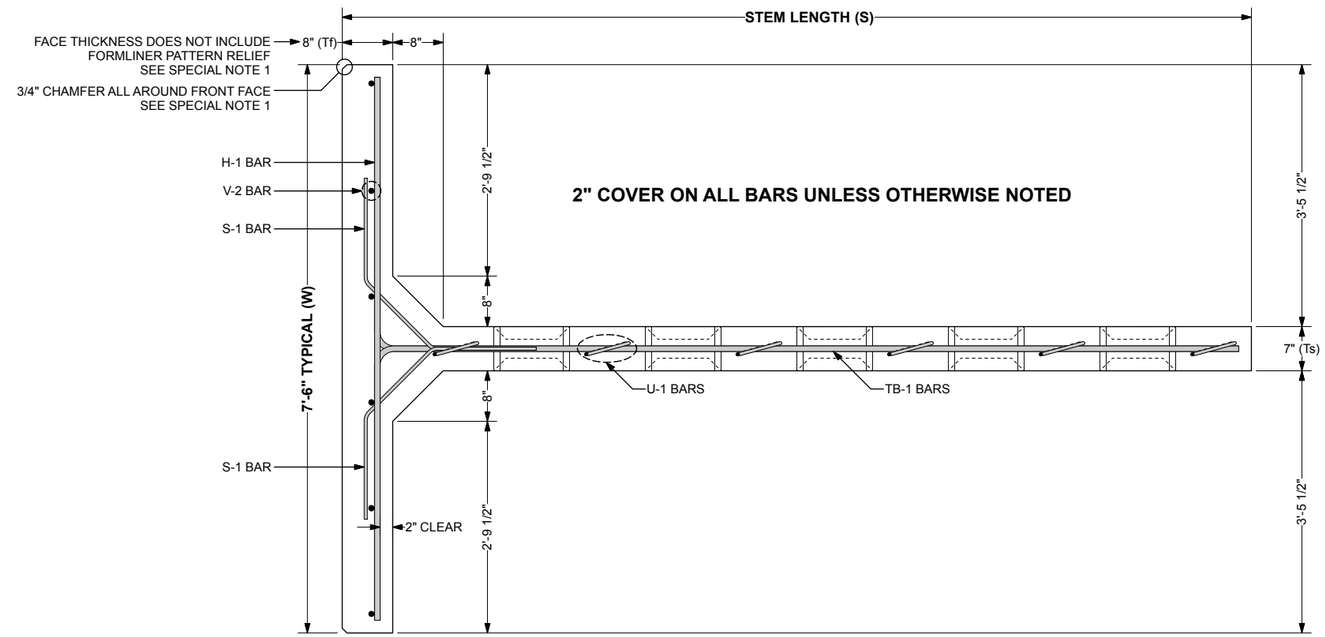

1 PLAN VIEW - 2.5 x 7.5 HALF UNIT (12'-0" STEM SHOWN)
Scale: 1" = 1'-0"

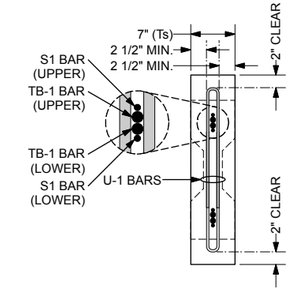

4 SECTION THROUGH STEM
Scale: 1" = 1'-0"

SPECIAL NOTES:

1. FRONT FACE OF T-WALL® UNITS FINISH TREATMENT:
   - PER CONTRACT DRAWINGS AND SPECS.
   - MINIMUM FRONT FACE THICKNESS SHALL BE 8"
2. TOP & BOTTOM SHEAR KEY BLOCKOUTS MAY BE LEFT OUT IN AN ALTERNATING PATTERN WHEN STEM LENGTHS BECOME LONGER THAN 12 FT (SPACED AT 2'-0"). ALL BLOCKOUTS ARE REQUIRED IN THE STEM FOR THE FIRST 12 FT OF LENGTH. REGARDLESS OF OVERALL LENGTH.
3. LIFTING INSERTS:
   - MEADOW BURKE RAPID LIFT RL-22 LIFTING INSERT WITH RL-32 REBAR OR DAYTON SUPERIOR P-53 5-TON SWIFT LIFT EYE WITH P-60 TENSION BAR.
   - 8000 LBS (4 TONS) MINIMUM RATED WORKING LOAD CAPACITY.
   - REFER TO LIFTING INSERT DATA TABLE FOR INSERT LOCATIONS.
   - LIFTING INSERTS TO BE GALVANIZED.

GENERAL NOTES:

1. PRIMARY REFERENCE: AASHTO LRFD BRIDGE SPECIFICATIONS, 5th EDITION, 2010 WITH INTERIM REVISIONS
2. MINIMUM CONCRETE COVER IS DESIGNED FOR 2" ON ALL BARS. TOLERANCES PER CONSTRUCTION SPECIFICATIONS SECTION 2.0.
3. ALL MATERIAL AND TOLERANCES IN ACCORDS TO T-WALL® CONSTRUCTION SPECIFICATIONS, SECTION 2.0 MATERIALS.
4. REBAR:
   - SEE CONSTRUCTION SPECIFICATION, SECTION 2.0 MATERIALS OR PER CONTRACT DRAWINGS AND SPECS.
5. CONCRETE:
   - F'c = 5000 psi @ 28 DAYS

PA DOT DWG # 87-402 PE (REVISION IV)

COMMONWEALTH OF PENNSYLVANIA
DEPARTMENT OF TRANSPORTATION
BUREAU OF PROJECT DELIVERY

T-WALL® STANDARDS
PREFABRICATED T-WALL® RETAINING WALL SYSTEM

SHOP DRAWINGS
REBAR
HALF UNIT (I)

4/13/2017

DESIGNER

THE NEEL COMPANY
8328-D TRAFORD LANE
SPRINGFIELD, VA 22152
PH: (703) 913-7858
FX: (703) 913-7859
Web: www.neelco.com

This drawing contains information proprietary to The Neel Company. The Neel Company is the exclusive licensee of the T-WALL® patent. ©2017, The Neel Company

DATE:	03-23-17
SCALE:	AS NOTED
DESIGNED:	JMC
DRAWN:	CJW
CHECKED:	CCG/KD
TNC JOB #:	TW3634
TNC SHT #42 OF 67	

SHEET 42 OF 67

87-402 PE

DATE: 03-23-17 TNC JOB #: TW3634 PLOT DATE AND TIME: Wednesday, March 22, 2017 15:48:38 CAD FILE NAME: 042 Rebar - RWY Hlf r4-0.vwx

T-WALL UNIT PROPERTIES

UNIT TYPE	H	W	S	Tf*	SH	VOLUME*	WEIGHT*
2.5x7.5x06 Hlf	2'6"	7'6"	6'0"	8"	2'6"	0.75 cy	3,044 lbs
2.5x7.5x08 Hlf	2'6"	7'6"	8'0"	8"	2'6"	0.84 cy	3,399 lbs
2.5x7.5x10 Hlf	2'6"	7'6"	10'0"	8"	2'6"	0.93 cy	3,754 lbs
2.5x7.5x12 Hlf	2'6"	7'6"	12'0"	8"	2'6"	1.01 cy	4,109 lbs
2.5x7.5x14 Hlf	2'6"	7'6"	14'0"	8"	2'6"	1.10 cy	4,464 lbs
2.5x7.5x16 Hlf	2'6"	7'6"	16'0"	8"	2'6"	1.19 cy	4,820 lbs
2.5x7.5x18 Hlf	2'6"	7'6"	18'0"	8"	2'6"	1.28 cy	5,175 lbs
2.5x7.5x20 Hlf	2'6"	7'6"	20'0"	8"	2'6"	1.37 cy	5,530 lbs
2.5x7.5x22 Hlf	2'6"	7'6"	22'0"	8"	2'6"	1.45 cy	5,885 lbs
2.5x7.5x24 Hlf	2'6"	7'6"	24'0"	8"	2'6"	1.54 cy	6,240 lbs
2.5x7.5x26 Hlf	2'6"	7'6"	26'0"	8"	2'6"	1.63 cy	6,595 lbs
2.5x7.5x28 Hlf	2'6"	7'6"	28'0"	8"	2'6"	1.72 cy	6,951 lbs
2.5x7.5x30 Hlf	2'6"	7'6"	30'0"	8"	2'6"	1.80 cy	7,306 lbs
2.5x7.5x32 Hlf	2'6"	7'6"	32'0"	8"	2'6"	1.89 cy	7,661 lbs

*** VOLUMES AND WEIGHTS ON THIS TABLE ARE BASED ON 8" FACE THICKNESS (Tf)**
FORMLINER FINISHES MAY INCREASE FACE THICKNESS, VOLUME AND WEIGHT.

LIFTING INSERT DATA

UNIT TYPE	DISTANCE TO CENTROID FROM FRONT FACE	DISTANCE TO INSERT #1 FROM FRONT FACE	DISTANCE TO INSERT #2 FROM FRONT FACE
2.5x7.5x06 Hlf	1'3 7/8"	8"	3'6"
2.5x7.5x08 Hlf	1'11 1/8"	8"	3'6"
2.5x7.5x10 Hlf	2'7 1/4"	8"	5'6"
2.5x7.5x12 Hlf	3'4"	8"	7'6"
2.5x7.5x14 Hlf	4'1 3/8"	8"	7'6"
2.5x7.5x16 Hlf	4'11"	8"	9'6"
2.5x7.5x18 Hlf	5'9"	8"	11'6"
2.5x7.5x20 Hlf	6'7 3/8"	8"	13'6"
2.5x7.5x22 Hlf	7'5 3/4"	8"	15'6"
2.5x7.5x24 Hlf	8'4 1/2"	8"	17'6"
2.5x7.5x26 Hlf	9'3 1/4"	8"	19'6"
2.5x7.5x28 Hlf	10'2 1/8"	8"	19'6"
2.5x7.5x30 Hlf	11'1 1/4"	8"	21'6"
2.5x7.5x32 Hlf	12'0 3/8"	8"	23'6"

REBAR SCHEDULES

2.5x7.5x06 Hlf — **HIGHWAY REBAR**

Unit Dims	Bar Mark	Qnty	Size	Length	Dim "A"	Bar Weight	Remarks
H=2'6"	H-1	3 ea	#4	7'2"		14.36 lbs	
W=7'6"	U-1	6 ea	#3	3'9"		8.46 lbs	
S=6'0"	V-2	6 ea	#4	2'2"		8.68 lbs	
SH=2'6"	S-1	4 ea	#4	4'0 1/4"		10.74 lbs	
	TB-1	4 ea	#4	9'0 1/4"	5'4 3/4"	24.10 lbs	
						66.35 lbs	

2.5x7.5x08 Hlf — **HIGHWAY REBAR**

Unit Dims	Bar Mark	Qnty	Size	Length	Dim "A"	Bar Weight	Remarks
H=2'6"	H-1	3 ea	#4	7'2"		14.36 lbs	
W=7'6"	U-1	8 ea	#3	3'9"		11.28 lbs	
S=8'0"	V-2	6 ea	#4	2'2"		8.68 lbs	
SH=2'6"	S-1	4 ea	#4	4'0 1/4"		10.74 lbs	
	TB-1	4 ea	#4	11'0 1/4"	7'4 3/4"	29.45 lbs	
						74.52 lbs	

2.5x7.5x10 Hlf — **HIGHWAY REBAR**

Unit Dims	Bar Mark	Qnty	Size	Length	Dim "A"	Bar Weight	Remarks
H=2'6"	H-1	3 ea	#4	7'2"		14.36 lbs	
W=7'6"	U-1	10 ea	#3	3'9"		14.10 lbs	
S=10'0"	V-2	6 ea	#4	2'2"		8.68 lbs	
SH=2'6"	S-1	4 ea	#4	4'0 1/4"		10.74 lbs	
	TB-1	4 ea	#4	13'0 1/4"	9'4 3/4"	34.79 lbs	
						82.68 lbs	

2.5x7.5x12 Hlf — **HIGHWAY REBAR**

Unit Dims	Bar Mark	Qnty	Size	Length	Dim "A"	Bar Weight	Remarks
H=2'6"	H-1	3 ea	#4	7'2"		14.36 lbs	
W=7'6"	U-1	12 ea	#3	3'9"		16.92 lbs	
S=12'0"	V-2	6 ea	#4	2'2"		8.68 lbs	
SH=2'6"	S-1	4 ea	#4	4'0 1/4"		10.74 lbs	
	TB-1	4 ea	#4	15'0 1/4"	11'4 3/4"	40.14 lbs	
						90.85 lbs	

2.5x7.5x14 Hlf — **HIGHWAY REBAR**

Unit Dims	Bar Mark	Qnty	Size	Length	Dim "A"	Bar Weight	Remarks
H=2'6"	H-1	3 ea	#5	7'2"		22.42 lbs	
W=7'6"	U-1	14 ea	#3	3'9"		19.74 lbs	
S=14'0"	V-2	6 ea	#4	2'2"		8.68 lbs	
SH=2'6"	S-1	4 ea	#4	4'0 1/4"		10.74 lbs	
	TB-1	4 ea	#4	17'0 1/4"	13'4 3/4"	45.48 lbs	
						107.07 lbs	

2.5x7.5x16 Hlf — **HIGHWAY REBAR**

Unit Dims	Bar Mark	Qnty	Size	Length	Dim "A"	Bar Weight	Remarks
H=2'6"	H-1	3 ea	#5	7'2"		22.42 lbs	
W=7'6"	U-1	16 ea	#3	3'9"		22.56 lbs	
S=16'0"	V-2	6 ea	#4	2'2"		8.68 lbs	
SH=2'6"	S-1	4 ea	#4	4'0 1/4"		10.74 lbs	
	TB-1	4 ea	#4	19'0 1/4"	15'4 3/4"	50.82 lbs	
						115.24 lbs	

2.5x7.5x18 Hlf — **HIGHWAY REBAR**

Unit Dims	Bar Mark	Qnty	Size	Length	Dim "A"	Bar Weight	Remarks
H=2'6"	H-1	3 ea	#5	7'2"		22.42 lbs	
W=7'6"	U-1	18 ea	#3	3'9"		25.38 lbs	
S=18'0"	V-2	6 ea	#4	2'2"		8.68 lbs	
SH=2'6"	S-1	4 ea	#4	4'0 1/4"		10.74 lbs	
	TB-1	4 ea	#4	21'0 1/4"	17'4 3/4"	56.17 lbs	
						123.40 lbs	

REBAR SCHEDULES

2.5x7.5x20 Hlf — **HIGHWAY REBAR**

Unit Dims	Bar Mark	Qnty	Size	Length	Dim "A"	Bar Weight	Remarks
H=2'6"	H-1	3 ea	#5	7'2"		22.42 lbs	
W=7'6"	U-1	20 ea	#3	3'9"		28.20 lbs	
S=20'0"	V-2	6 ea	#4	2'2"		8.68 lbs	
SH=2'6"	S-1	4 ea	#4	4'0 1/4"		10.74 lbs	
	TB-1	4 ea	#5	23'0 1/4"	19'4 3/4"	96.04 lbs	
						166.10 lbs	

2.5x7.5x22 Hlf — **HIGHWAY REBAR**

Unit Dims	Bar Mark	Qnty	Size	Length	Dim "A"	Bar Weight	Remarks
H=2'6"	H-1	3 ea	#5	7'2"		22.42 lbs	
W=7'6"	U-1	22 ea	#3	3'9"		31.02 lbs	
S=22'0"	V-2	6 ea	#4	2'2"		8.68 lbs	
SH=2'6"	S-1	4 ea	#4	4'0 1/4"		10.74 lbs	
	TB-1	4 ea	#5	25'0 1/4"	21'4 3/4"	104.39 lbs	
						177.26 lbs	

2.5x7.5x24 Hlf — **HIGHWAY REBAR**

Unit Dims	Bar Mark	Qnty	Size	Length	Dim "A"	Bar Weight	Remarks
H=2'6"	H-1	3 ea	#5	7'2"		22.42 lbs	
W=7'6"	U-1	24 ea	#3	3'9"		33.84 lbs	
S=24'0"	V-2	6 ea	#4	2'2"		8.68 lbs	
SH=2'6"	S-1	4 ea	#4	4'0 1/4"		10.74 lbs	
	TB-1	4 ea	#5	27'0 1/4"	23'4 3/4"	112.73 lbs	
						188.42 lbs	

2.5x7.5x26 Hlf — **HIGHWAY REBAR**

Unit Dims	Bar Mark	Qnty	Size	Length	Dim "A"	Bar Weight	Remarks
H=2'6"	H-1	3 ea	#6	7'2"		32.29 lbs	
W=7'6"	U-1	26 ea	#3	3'9"		36.66 lbs	
S=26'0"	V-2	6 ea	#4	2'2"		8.68 lbs	
SH=2'6"	S-1	4 ea	#4	4'0 1/4"		10.74 lbs	
	TB-1	4 ea	#5	29'0 1/4"	25'4 3/4"	121.07 lbs	
						209.46 lbs	

2.5x7.5x28 Hlf — **HIGHWAY REBAR**

Unit Dims	Bar Mark	Qnty	Size	Length	Dim "A"	Bar Weight	Remarks
H=2'6"	H-1	3 ea	#6	7'2"		32.29 lbs	
W=7'6"	U-1	28 ea	#3	3'9"		39.48 lbs	
S=28'0"	V-2	6 ea	#4	2'2"		8.68 lbs	
SH=2'6"	S-1	4 ea	#4	4'0 1/4"		10.74 lbs	
	TB-1	4 ea	#5	31'0 1/4"	27'4 3/4"	129.42 lbs	
						220.62 lbs	

2.5x7.5x30 Hlf — **HIGHWAY REBAR**

Unit Dims	Bar Mark	Qnty	Size	Length	Dim "A"	Bar Weight	Remarks
H=2'6"	H-1	3 ea	#6	7'2"		32.29 lbs	
W=7'6"	U-1	30 ea	#3	3'9"		42.30 lbs	
S=30'0"	V-2	6 ea	#4	2'2"		8.68 lbs	
SH=2'6"	S-1	4 ea	#4	4'0 1/4"		10.74 lbs	
	TB-1	4 ea	#5	33'0 1/4"	29'4 3/4"	137.76 lbs	
						231.78 lbs	

2.5x7.5x32 Hlf — **HIGHWAY REBAR**

Unit Dims	Bar Mark	Qnty	Size	Length	Dim "A"	Bar Weight	Remarks
H=2'6"	H-1	3 ea	#6	7'2"		32.29 lbs	
W=7'6"	U-1	32 ea	#3	3'9"		45.12 lbs	
S=32'0"	V-2	6 ea	#4	2'2"		8.68 lbs	
SH=2'6"	S-1	4 ea	#4	4'0 1/4"		10.74 lbs	
	TB-1	4 ea	#5	35'0 1/4"	31'4 3/4"	146.11 lbs	
						242.95 lbs	

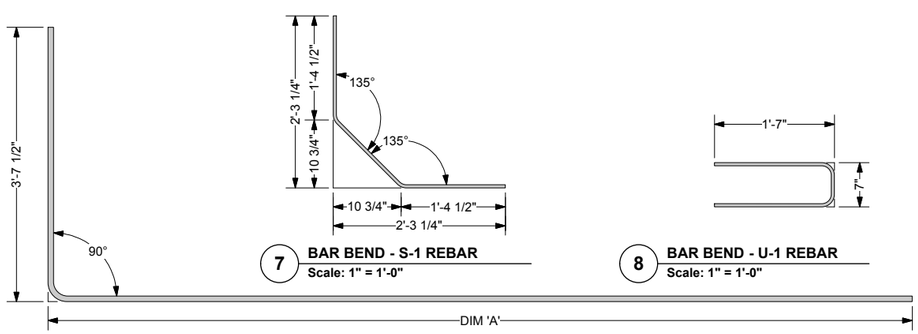

6 **BAR BEND - TB-1 REBAR**
Scale: 1" = 1'-0"

7 **BAR BEND - S-1 REBAR**
Scale: 1" = 1'-0"

8 **BAR BEND - U-1 REBAR**
Scale: 1" = 1'-0"

4/13/2017

DESIGNER

THE NEEL COMPANY
8328-D TRAFORD LANE
SPRINGFIELD, VA 22152
PH: (703) 913-7858
FX: (703) 913-7859
Web: www.neelco.com

This drawing contains information proprietary to The Neel Company. The Neel Company is the exclusive licensee of the T-WALL® patent. ©2017, The Neel Company

DATE: 03-23-17
SCALE: AS NOTED
DESIGNED: JMC
DRAWN: CJW
CHECKED: CCG/KD
TNC JOB #: TW3634
TNC SHT #43 OF 67

PA DOT DWG # 87-402 PE (REVISION IV)

COMMONWEALTH OF PENNSYLVANIA
DEPARTMENT OF TRANSPORTATION
BUREAU OF PROJECT DELIVERY

T-WALL® STANDARDS
PREFABRICATED T-WALL® RETAINING WALL SYSTEM

SHOP DRAWINGS
REBAR
HALF UNIT (II)

SHEET 43 OF 67

87-402 PE

DATE: 03-23-17 TNC JOB #: TW3634 PLOT DATE AND TIME: Wednesday, March 22, 2017 15:48:38 CAD FILE NAME: 042 Rebar - RWY Hlf r4-0.vwx

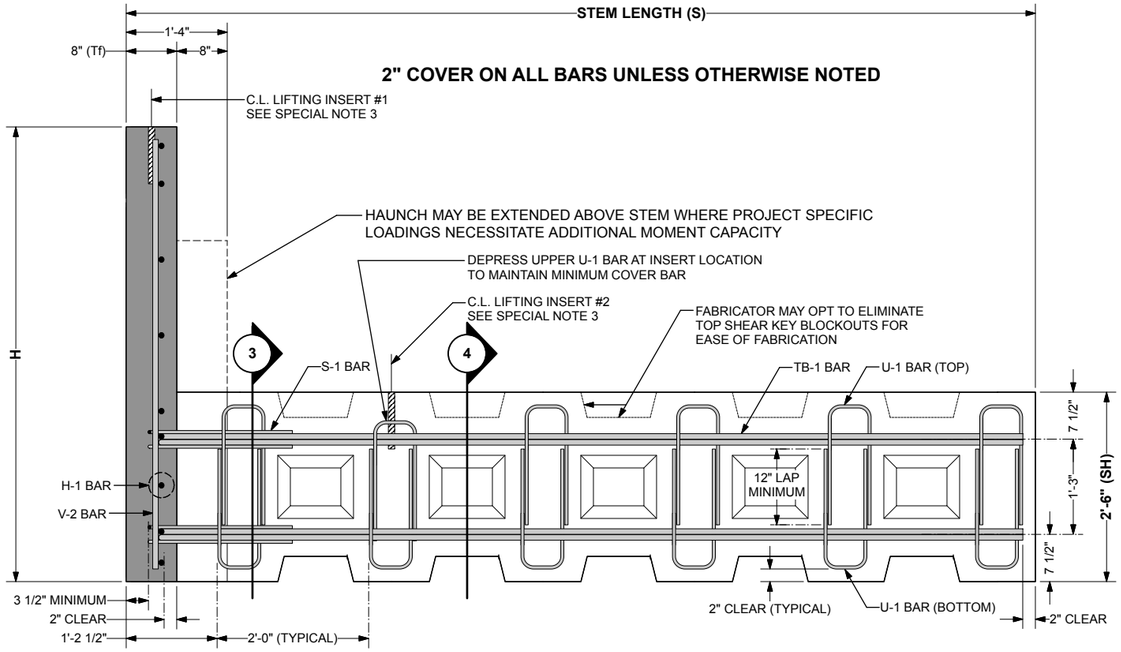

1 **SIDE VIEW - HALF TOP UNITS (6.0 x 7.5 x 12 Hlf Top SHOWN)**
Scale: 1" = 1'-0"

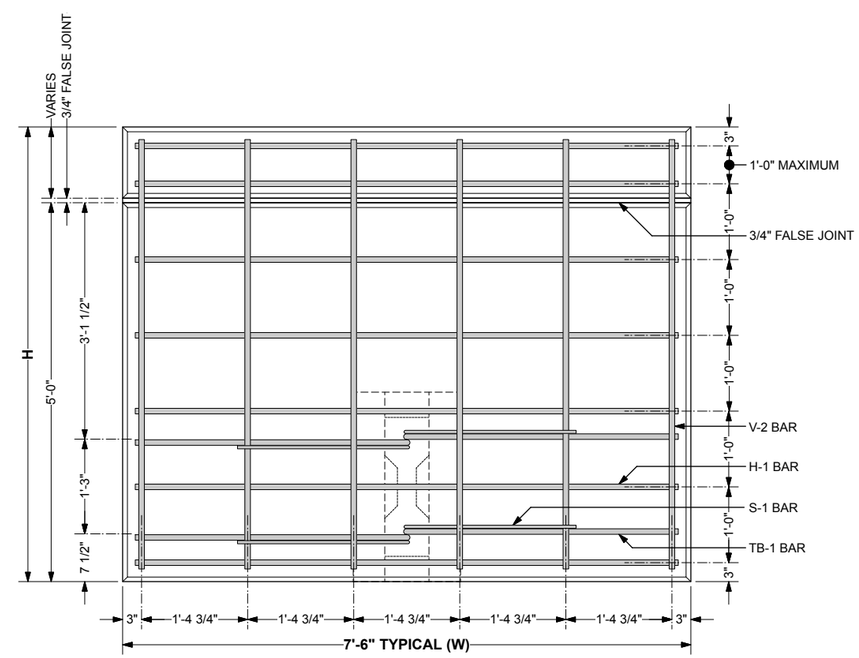

2 **FRONT VIEW - HALF TOP UNITS (6.0 x 7.5 x 12 Hlf Top SHOWN)**
Scale: 1" = 1'-0"
(U-1 BARS IN STEM OMITTED FOR CLARITY)

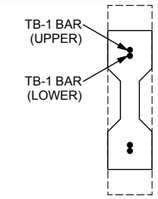

4 **SECTION THROUGH STEM**
Scale: 1" = 1'-0"

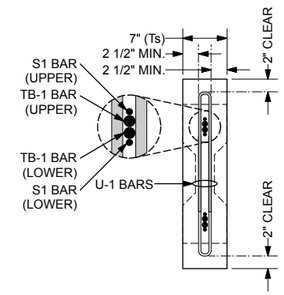

3 **SECTION THROUGH STEM**
Scale: 1" = 1'-0"

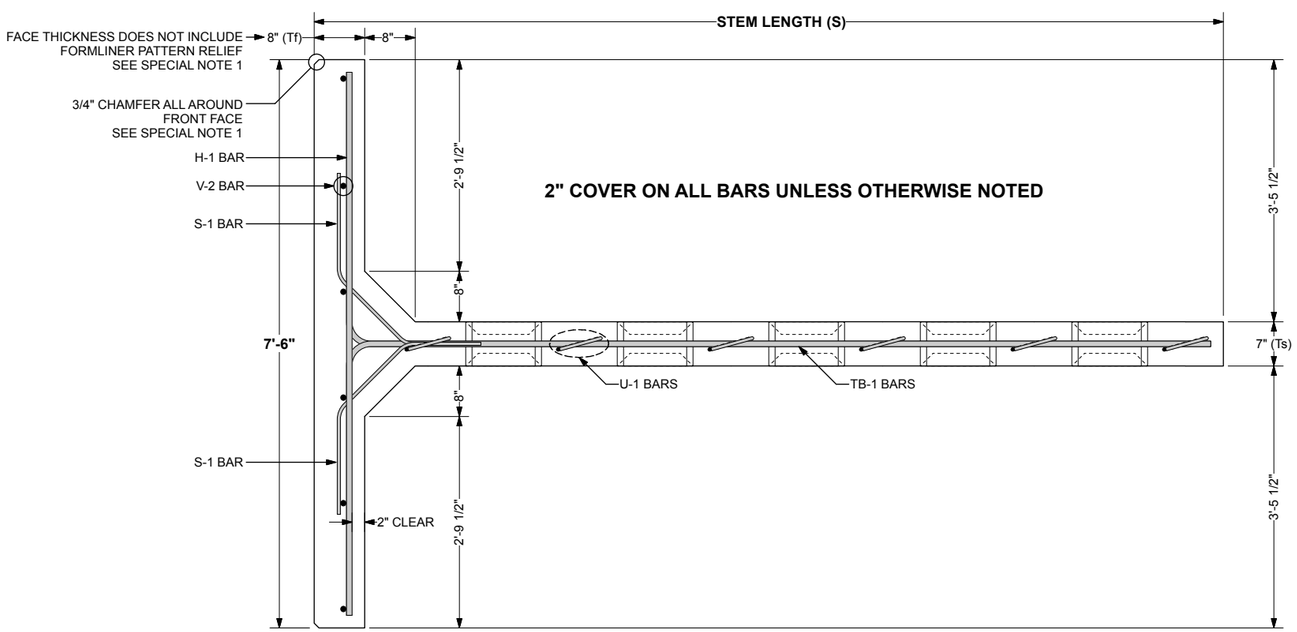

5 **PLAN VIEW AT STEM - HALF TOP UNIT (12'-0" STEM SHOWN)**
Scale: 1" = 1'-0"

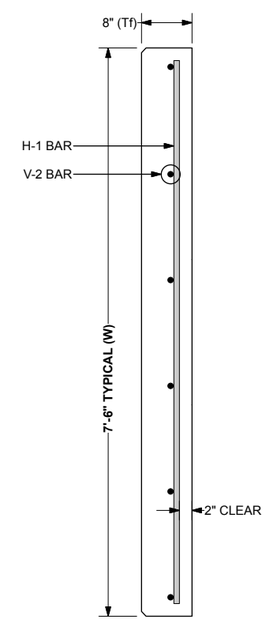

6 **PLAN VIEW - EXTENDED FACE PANEL**
Scale: 1" = 1'-0"

4/13/2017

PA DOT DWG # 87-402 PE (REVISION IV)

COMMONWEALTH OF PENNSYLVANIA
DEPARTMENT OF TRANSPORTATION
BUREAU OF PROJECT DELIVERY

T-WALL® STANDARDS
PREFABRICATED T-WALL® RETAINING WALL SYSTEM

SHOP DRAWINGS
REBAR
HALF TOP UNIT (I)

DESIGNER
THE NEEL COMPANY
8328-D TRAFORD LANE
SPRINGFIELD, VA 22152
PH: (703) 913-7858
FX: (703) 913-7859
Web: www.neelco.com

This drawing contains information proprietary to The Neel Company. The Neel Company is the exclusive licensee of the T-WALL® patent. © 2017, The Neel Company

DATE:	03-23-17
SCALE:	AS NOTED
DESIGNED:	JMC
DRAWN:	CJW
CHECKED:	CCG/KD
TNC JOB #:	TW3634
TNC SHT #44 OF 67	

SHEET 44 OF 67

87-402 PE

DATE: 03-23-17 TNC JOB #: TW3634 PLOT DATE AND TIME: Wednesday, March 22, 2017 15:48:28 CAD FILE NAME: 044 Rebar - RWY Hlf Top r4-0.vwx

T-WALL UNIT PROPERTIES

UNIT TYPE	H	W	S	Tf*	SH	VOLUME*	WEIGHT*
3.0x7.5x06 Hlf Top	3'0"	7'6"	6'0"	8"	2'6"	0.82 cy	3,316 lbs
3.5x7.5x06 Hlf Top	3'6"	7'6"	6'0"	8"	2'6"	0.91 cy	3,691 lbs
4.0x7.5x06 Hlf Top	4'0"	7'6"	6'0"	8"	2'6"	1.00 cy	4,066 lbs
4.5x7.5x06 Hlf Top	4'6"	7'6"	6'0"	8"	2'6"	1.10 cy	4,441 lbs
5.0x7.5x06 Hlf Top	5'0"	7'6"	6'0"	8"	2'6"	1.19 cy	4,816 lbs
5.5x7.5x06 Hlf Top	5'6"	7'6"	6'0"	8"	2'6"	1.28 cy	5,191 lbs
6.0x7.5x06 Hlf Top	6'0"	7'6"	6'0"	8"	2'6"	1.37 cy	5,566 lbs
6.5x7.5x06 Hlf Top	6'6"	7'6"	6'0"	8"	2'6"	1.47 cy	5,941 lbs
7.0x7.5x06 Hlf Top	7'0"	7'6"	6'0"	8"	2'6"	1.56 cy	6,316 lbs
7.5x7.5x06 Hlf Top	7'6"	7'6"	6'0"	8"	2'6"	1.65 cy	6,691 lbs

*** VOLUMES AND WEIGHTS ON THIS TABLE ARE BASED ON 8" FACE THICKNESS (Tf)**
FORMLINER FINISHES MAY INCREASE FACE THICKNESS, VOLUME AND WEIGHT.

LIFTING INSERT DATA

UNIT TYPE	DISTANCE TO CENTROID FROM FRONT FACE	DISTANCE TO INSERT #1 FROM FRONT FACE	DISTANCE TO INSERT #2 FROM FRONT FACE
3.0x7.5x06 Hlf Top	1'2 1/2"	4"	1'6"
3.5x7.5x06 Hlf Top	1'1 1/2"	4"	1'6"
4.0x7.5x06 Hlf Top	1'0 5/8"	4"	1'6"
4.5x7.5x06 Hlf Top	11 7/8"	4"	1'6"
5.0x7.5x06 Hlf Top	11 3/8"	4"	1'6"
5.5x7.5x06 Hlf Top	10 7/8"	4"	1'6"
6.0x7.5x06 Hlf Top	10 3/8"	4"	1'6"
6.5x7.5x06 Hlf Top	10 1/8"	4"	1'6"
7.0x7.5x06 Hlf Top	9 3/4"	4"	1'6"
7.5x7.5x06 Hlf Top	9 1/2"	4"	1'6"

SPECIAL NOTES:

1. FRONT FACE OF T-WALL® UNITS FINISH TREATMENT:
   - PER CONTRACT DRAWINGS AND SPECS.
   - MINIMUM FRONT FACE THICKNESS SHALL BE 8"
2. TOP & BOTTOM SHEAR KEY BLOCKOUTS MAY BE LEFT OUT IN AN ALTERNATING PATTERN WHEN STEM LENGTHS BECOME LONGER THAN 12 FT (SPACED AT 2'-0"). ALL BLOCKOUTS ARE REQUIRED IN THE STEM FOR THE FIRST 12 FT OF LENGTH. REGARDLESS OF OVERALL LENGTH.
3. LIFTING INSERTS:
   - MEADOW BURKE RAPID LIFT RL-22 LIFTING INSERT WITH RL-32 REBAR OR DAYTON SUPERIOR P-53 5-TON SWIFT LIFT EYE WITH P-60 TENSION BAR.
   - 8000 LBS (4 TONS) MINIMUM RATED WORKING LOAD CAPACITY.
   - REFER TO LIFTING INSERT DATA TABLE FOR INSERT LOCATIONS.
   - LIFTING INSERTS TO BE GALVANIZED.

GENERAL NOTES:

1. PRIMARY REFERENCE: AASHTO LRFD BRIDGE SPECIFICATIONS, 5th EDITION, 2010 WITH INTERIM REVISIONS
2. MINIMUM CONCRETE COVER IS DESIGNED FOR 2" ON ALL BARS. TOLERANCES PER CONSTRUCTION SPECIFICATIONS SECTION 2.0.
3. ALL MATERIAL AND TOLERANCES IN ACCORDS TO T-WALL® CONSTRUCTION SPECIFICATIONS, SECTION 2.0 MATERIALS.
4. REBAR:
   - SEE CONSTRUCTION SPECIFICATION, SECTION 2.0 MATERIALS OR PER CONTRACT DRAWINGS AND SPECS.
5. CONCRETE:
   - F'c = 5000 psi @ 28 DAYS

REBAR SCHEDULES

3.0x7.5x06 Hlf Top — **REBAR SCHEDULES**

Unit Dims	Bar Mark	Qnty	Size	Length	Dim "A"	Bar Weight	Remarks
H=3'0"	H-1	4 ea	#4	7'2"		19.15 lbs	
W=7'6"	U-1	6 ea	#3	3'9"		8.46 lbs	
S=6'0"	V-2	6 ea	#5	2'8"		16.69 lbs	
SH=2'6"	S-1	4 ea	#4	4'0 1/4"		10.74 lbs	
	TB-1	4 ea	#4	9'0 1/4"	5'4 3/4"	24.10 lbs	
						79.14 lbs	

3.5x7.5x06 Hlf Top — **REBAR SCHEDULES**

Unit Dims	Bar Mark	Qnty	Size	Length	Dim "A"	Bar Weight	Remarks
H=3'6"	H-1	4 ea	#4	7'2"		19.15 lbs	
W=7'6"	U-1	6 ea	#3	3'9"		8.46 lbs	
S=6'0"	V-2	6 ea	#5	3'2"		19.82 lbs	
SH=2'6"	S-1	4 ea	#4	4'0 1/4"		10.74 lbs	
	TB-1	4 ea	#4	9'0 1/4"	5'4 3/4"	24.10 lbs	
						82.27 lbs	

4.0x7.5x06 Hlf Top — **REBAR SCHEDULES**

Unit Dims	Bar Mark	Qnty	Size	Length	Dim "A"	Bar Weight	Remarks
H=4'0"	H-1	5 ea	#4	7'2"		23.94 lbs	
W=7'6"	U-1	6 ea	#3	3'9"		8.46 lbs	
S=6'0"	V-2	6 ea	#5	3'8"		22.95 lbs	
SH=2'6"	S-1	4 ea	#4	4'0 1/4"		10.74 lbs	
	TB-1	4 ea	#4	9'0 1/4"	5'4 3/4"	24.10 lbs	
						90.19 lbs	

4.5x7.5x06 Hlf Top — **REBAR SCHEDULES**

Unit Dims	Bar Mark	Qnty	Size	Length	Dim "A"	Bar Weight	Remarks
H=4'6"	H-1	5 ea	#4	7'2"		23.94 lbs	
W=7'6"	U-1	6 ea	#3	3'9"		8.46 lbs	
S=6'0"	V-2	6 ea	#5	4'2"		26.08 lbs	
SH=2'6"	S-1	4 ea	#4	4'0 1/4"		10.74 lbs	
	TB-1	4 ea	#4	9'0 1/4"	5'4 3/4"	24.10 lbs	
						93.32 lbs	

5.0x7.5x06 Hlf Top — **REBAR SCHEDULES**

Unit Dims	Bar Mark	Qnty	Size	Length	Dim "A"	Bar Weight	Remarks
H=5'0"	H-1	6 ea	#4	7'2"		28.72 lbs	
W=7'6"	U-1	6 ea	#3	3'9"		8.46 lbs	
S=6'0"	V-2	6 ea	#5	4'8"		29.20 lbs	
SH=2'6"	S-1	4 ea	#4	4'0 1/4"		10.74 lbs	
	TB-1	4 ea	#4	9'0 1/4"	5'4 3/4"	24.10 lbs	
						101.24 lbs	

REBAR SCHEDULES

5.5x7.5x06 Hlf Top — **REBAR SCHEDULES**

Unit Dims	Bar Mark	Qnty	Size	Length	Dim "A"	Bar Weight	Remarks
H=5'6"	H-1	6 ea	#4	7'2"		28.72 lbs	
W=7'6"	U-1	6 ea	#3	3'9"		8.46 lbs	
S=6'0"	V-2	6 ea	#5	5'2"		32.33 lbs	
SH=2'6"	S-1	4 ea	#4	4'0 1/4"		10.74 lbs	
	TB-1	4 ea	#5	9'0 1/4"	5'4 3/4"	37.63 lbs	
						117.90 lbs	

6.0x7.5x06 Hlf Top — **REBAR SCHEDULES**

Unit Dims	Bar Mark	Qnty	Size	Length	Dim "A"	Bar Weight	Remarks
H=6'0"	H-1	7 ea	#4	7'2"		33.51 lbs	
W=7'6"	U-1	6 ea	#3	3'9"		8.46 lbs	
S=6'0"	V-2	6 ea	#5	5'8"		35.46 lbs	
SH=2'6"	S-1	4 ea	#4	4'0 1/4"		10.74 lbs	
	TB-1	4 ea	#5	9'0 1/4"	5'4 3/4"	37.63 lbs	
						125.81 lbs	

6.5x7.5x06 Hlf Top — **REBAR SCHEDULES**

Unit Dims	Bar Mark	Qnty	Size	Length	Dim "A"	Bar Weight	Remarks
H=6'6"	H-1	7 ea	#4	7'2"		33.51 lbs	
W=7'6"	U-1	6 ea	#3	3'9"		8.46 lbs	
S=6'0"	V-2	6 ea	#6	6'2"		55.57 lbs	
SH=2'6"	S-1	4 ea	#4	4'0 1/4"		10.74 lbs	
	TB-1	4 ea	#6	9'0 1/4"	5'4 3/4"	54.20 lbs	
						162.49 lbs	

7.0x7.5x06 Hlf Top — **REBAR SCHEDULES**

Unit Dims	Bar Mark	Qnty	Size	Length	Dim "A"	Bar Weight	Remarks
H=7'0"	H-1	8 ea	#4	7'2"		38.30 lbs	
W=7'6"	U-1	6 ea	#3	3'9"		8.46 lbs	
S=6'0"	V-2	6 ea	#6	6'8"		60.08 lbs	
SH=2'6"	S-1	4 ea	#4	4'0 1/4"		10.74 lbs	
	TB-1	4 ea	#6	9'0 1/4"	5'4 3/4"	54.20 lbs	
						171.78 lbs	

7.5x7.5x06 Hlf Top — **REBAR SCHEDULES**

Unit Dims	Bar Mark	Qnty	Size	Length	Dim "A"	Bar Weight	Remarks
H=7'6"	H-1	8 ea	#4	7'2"		38.30 lbs	
W=7'6"	U-1	6 ea	#3	3'9"		8.46 lbs	
S=6'0"	V-2	6 ea	#7	7'2"		87.89 lbs	
SH=2'6"	S-1	4 ea	#4	4'0 1/4"		10.74 lbs	
	TB-1	4 ea	#7	9'0 1/4"	5'4 3/4"	73.75 lbs	
						219.15 lbs	

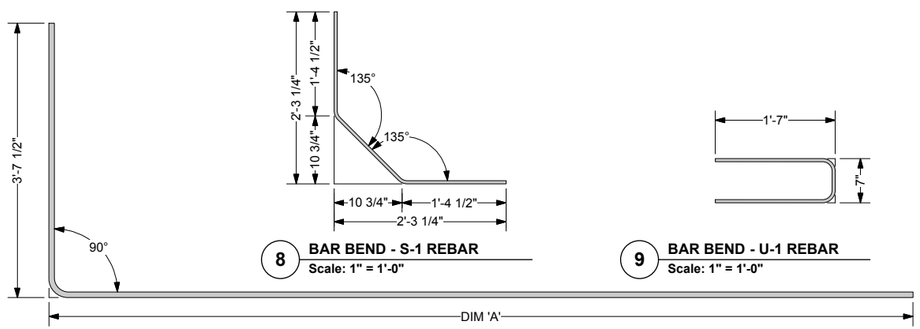

7 **BAR BEND - TB-1 REBAR**
Scale: 1" = 1'-0"

8 **BAR BEND - S-1 REBAR**
Scale: 1" = 1'-0"

9 **BAR BEND - U-1 REBAR**
Scale: 1" = 1'-0"

4/13/2017

DESIGNER

THE NEEL COMPANY
8328-D TRAFORD LANE
SPRINGFIELD, VA 22152
PH: (703) 913-7858
FX: (703) 913-7859
Web: www.neelco.com

This drawing contains information proprietary to The Neel Company. The Neel Company is the exclusive licensee of the T-WALL® patent. © 2017, The Neel Company

DATE:	03-23-17
SCALE:	NO SCALE
DESIGNED:	JMC
DRAWN:	CJW
CHECKED:	CCG/KD
TNC JOB #:	TW3634
TNC SHT #:	45 OF 67

PA DOT DWG # 87-402 PE (REVISION IV)

COMMONWEALTH OF PENNSYLVANIA
DEPARTMENT OF TRANSPORTATION
BUREAU OF PROJECT DELIVERY

T-WALL® STANDARDS
PREFABRICATED T-WALL® RETAINING WALL SYSTEM

SHOP DRAWINGS
REBAR
HALF TOP UNIT (II)

DATE: 03-23-17 TNC JOB #: TW3634 PLOT DATE AND TIME: Wednesday, March 22, 2017 15:48:28 CAD FILE NAME: 044 Rebar - RWY Hlf Top r4-0.vwx

T-WALL UNIT PROPERTIES

UNIT TYPE	H	W	S	Tf*	SH	VOLUME*	WEIGHT*
3.0x7.5x08 Hlf Top	3'0"	7'6"	8'0"	8"	2'6"	0.89 cy	3,620 lbs
3.5x7.5x08 Hlf Top	3'6"	7'6"	8'0"	8"	2'6"	0.99 cy	3,995 lbs
4.0x7.5x08 Hlf Top	4'0"	7'6"	8'0"	8"	2'6"	1.08 cy	4,370 lbs
4.5x7.5x08 Hlf Top	4'6"	7'6"	8'0"	8"	2'6"	1.17 cy	4,745 lbs
5.0x7.5x08 Hlf Top	5'0"	7'6"	8'0"	8"	2'6"	1.26 cy	5,120 lbs
5.5x7.5x08 Hlf Top	5'6"	7'6"	8'0"	8"	2'6"	1.36 cy	5,495 lbs
6.0x7.5x08 Hlf Top	6'0"	7'6"	8'0"	8"	2'6"	1.45 cy	5,870 lbs
6.5x7.5x08 Hlf Top	6'6"	7'6"	8'0"	8"	2'6"	1.54 cy	6,245 lbs
7.0x7.5x08 Hlf Top	7'0"	7'6"	8'0"	8"	2'6"	1.63 cy	6,620 lbs
7.5x7.5x08 Hlf Top	7'6"	7'6"	8'0"	8"	2'6"	1.73 cy	6,995 lbs

*** VOLUMES AND WEIGHTS ON THIS TABLE ARE BASED ON 8" FACE THICKNESS (Tf)**
FORMLINER FINISHES MAY INCREASE FACE THICKNESS, VOLUME AND WEIGHT.

LIFTING INSERT DATA

UNIT TYPE	DISTANCE TO CENTROID FROM FRONT FACE	DISTANCE TO INSERT #1 FROM FRONT FACE	DISTANCE TO INSERT #2 FROM FRONT FACE
3.0x7.5x08 Hlf Top	1'9 1/8"	4"	3'6"
3.5x7.5x08 Hlf Top	1'7 3/8"	4"	3'6"
4.0x7.5x08 Hlf Top	1'6 1/8"	4"	3'6"
4.5x7.5x08 Hlf Top	1'5"	4"	3'6"
5.0x7.5x08 Hlf Top	1'4"	4"	3'6"
5.5x7.5x08 Hlf Top	1'3 1/4"	4"	3'6"
6.0x7.5x08 Hlf Top	1'2 1/2"	4"	1'6"
6.5x7.5x08 Hlf Top	1'1 7/8"	4"	1'6"
7.0x7.5x08 Hlf Top	1'1 3/8"	4"	1'6"
7.5x7.5x08 Hlf Top	1'0 7/8"	4"	1'6"

REBAR SCHEDULES

3.0x7.5x08 Hlf Top — **REBAR SCHEDULES**

Unit Dims	Bar Mark	Qnty	Size	Length	Dim "A"	Bar Weight	Remarks
H=3'0"	H-1	4 ea	#4	7'2"		19.15 lbs	
W=7'6"	U-1	8 ea	#3	3'9"		11.28 lbs	
S=8'0"	V-2	6 ea	#5	2'8"		16.69 lbs	
SH=2'6"	S-1	4 ea	#4	4'0 1/4"		10.74 lbs	
	TB-1	4 ea	#4	11'0 1/4"	7'4 3/4"	29.45 lbs	
						87.31 lbs	

3.5x7.5x08 Hlf Top — **REBAR SCHEDULES**

Unit Dims	Bar Mark	Qnty	Size	Length	Dim "A"	Bar Weight	Remarks
H=3'6"	H-1	4 ea	#4	7'2"		19.15 lbs	
W=7'6"	U-1	8 ea	#3	3'9"		11.28 lbs	
S=8'0"	V-2	6 ea	#5	3'2"		19.82 lbs	
SH=2'6"	S-1	4 ea	#4	4'0 1/4"		10.74 lbs	
	TB-1	4 ea	#4	11'0 1/4"	7'4 3/4"	29.45 lbs	
						90.44 lbs	

4.0x7.5x08 Hlf Top — **REBAR SCHEDULES**

Unit Dims	Bar Mark	Qnty	Size	Length	Dim "A"	Bar Weight	Remarks
H=4'0"	H-1	5 ea	#4	7'2"		23.94 lbs	
W=7'6"	U-1	8 ea	#3	3'9"		11.28 lbs	
S=8'0"	V-2	6 ea	#5	3'8"		22.95 lbs	
SH=2'6"	S-1	4 ea	#4	4'0 1/4"		10.74 lbs	
	TB-1	4 ea	#4	11'0 1/4"	7'4 3/4"	29.45 lbs	
						98.35 lbs	

4.5x7.5x08 Hlf Top — **REBAR SCHEDULES**

Unit Dims	Bar Mark	Qnty	Size	Length	Dim "A"	Bar Weight	Remarks
H=4'6"	H-1	5 ea	#4	7'2"		23.94 lbs	
W=7'6"	U-1	8 ea	#3	3'9"		11.28 lbs	
S=8'0"	V-2	6 ea	#5	4'2"		26.08 lbs	
SH=2'6"	S-1	4 ea	#4	4'0 1/4"		10.74 lbs	
	TB-1	4 ea	#4	11'0 1/4"	7'4 3/4"	29.45 lbs	
						101.48 lbs	

5.0x7.5x08 Hlf Top — **REBAR SCHEDULES**

Unit Dims	Bar Mark	Qnty	Size	Length	Dim "A"	Bar Weight	Remarks
H=5'0"	H-1	6 ea	#4	7'2"		28.72 lbs	
W=7'6"	U-1	8 ea	#3	3'9"		11.28 lbs	
S=8'0"	V-2	6 ea	#5	4'8"		29.20 lbs	
SH=2'6"	S-1	4 ea	#4	4'0 1/4"		10.74 lbs	
	TB-1	4 ea	#4	11'0 1/4"	7'4 3/4"	29.45 lbs	
						109.40 lbs	

REBAR SCHEDULES

5.5x7.5x08 Hlf Top — **REBAR SCHEDULES**

Unit Dims	Bar Mark	Qnty	Size	Length	Dim "A"	Bar Weight	Remarks
H=5'6"	H-1	6 ea	#4	7'2"		28.72 lbs	
W=7'6"	U-1	8 ea	#3	3'9"		11.28 lbs	
S=8'0"	V-2	6 ea	#5	5'2"		32.33 lbs	
SH=2'6"	S-1	4 ea	#4	4'0 1/4"		10.74 lbs	
	TB-1	4 ea	#5	11'0 1/4"	7'4 3/4"	45.98 lbs	
						129.06 lbs	

6.0x7.5x08 Hlf Top — **REBAR SCHEDULES**

Unit Dims	Bar Mark	Qnty	Size	Length	Dim "A"	Bar Weight	Remarks
H=6'0"	H-1	7 ea	#4	7'2"		33.51 lbs	
W=7'6"	U-1	8 ea	#3	3'9"		11.28 lbs	
S=8'0"	V-2	6 ea	#5	5'8"		35.46 lbs	
SH=2'6"	S-1	4 ea	#4	4'0 1/4"		10.74 lbs	
	TB-1	4 ea	#5	11'0 1/4"	7'4 3/4"	45.98 lbs	
						136.98 lbs	

6.5x7.5x08 Hlf Top — **REBAR SCHEDULES**

Unit Dims	Bar Mark	Qnty	Size	Length	Dim "A"	Bar Weight	Remarks
H=6'6"	H-1	7 ea	#4	7'2"		33.51 lbs	
W=7'6"	U-1	8 ea	#3	3'9"		11.28 lbs	
S=8'0"	V-2	6 ea	#6	6'2"		55.57 lbs	
SH=2'6"	S-1	4 ea	#4	4'0 1/4"		10.74 lbs	
	TB-1	4 ea	#6	11'0 1/4"	7'4 3/4"	66.21 lbs	
						177.32 lbs	

7.0x7.5x08 Hlf Top — **REBAR SCHEDULES**

Unit Dims	Bar Mark	Qnty	Size	Length	Dim "A"	Bar Weight	Remarks
H=7'0"	H-1	8 ea	#4	7'2"		38.30 lbs	
W=7'6"	U-1	8 ea	#3	3'9"		11.28 lbs	
S=8'0"	V-2	6 ea	#6	6'8"		60.08 lbs	
SH=2'6"	S-1	4 ea	#4	4'0 1/4"		10.74 lbs	
	TB-1	4 ea	#6	11'0 1/4"	7'4 3/4"	66.21 lbs	
						186.62 lbs	

7.5x7.5x08 Hlf Top — **REBAR SCHEDULES**

Unit Dims	Bar Mark	Qnty	Size	Length	Dim "A"	Bar Weight	Remarks
H=7'6"	H-1	8 ea	#4	7'2"		38.30 lbs	
W=7'6"	U-1	8 ea	#3	3'9"		11.28 lbs	
S=8'0"	V-2	6 ea	#7	7'2"		87.89 lbs	
SH=2'6"	S-1	4 ea	#4	4'0 1/4"		10.74 lbs	
	TB-1	4 ea	#7	11'0 1/4"	7'4 3/4"	90.11 lbs	
						238.32 lbs	

PA DOT DWG # 87-402 PE (REVISION IV)

COMMONWEALTH OF PENNSYLVANIA
DEPARTMENT OF TRANSPORTATION
BUREAU OF PROJECT DELIVERY

T-WALL® STANDARDS
PREFABRICATED T-WALL® RETAINING WALL SYSTEM

SHOP DRAWINGS
REBAR
HALF TOP UNIT (III)

DESIGNER
THE NEEL COMPANY
8328-D TRAFORD LANE
SPRINGFIELD, VA 22152
PH: (703) 913-7858
FX: (703) 913-7859
Web: www.neelco.com

This drawing contains information proprietary to The Neel Company. The Neel Company is the exclusive licensee of the T-WALL® patent. © 2017, The Neel Company

DATE: 03-23-17
SCALE: NO SCALE
DESIGNED: JMC
DRAWN: CJW
CHECKED: CCG/KD
TNC JOB #: TW3634
TNC SHT #46 OF 67

SHEET 46 OF 67

87-402 PE

4/13/2017

DATE: 03-23-17 TNC JOB #: TW3634 PLOT DATE AND TIME: Wednesday, March 22, 2017 15:48:28 CAD FILE NAME: 044 Rebar - RWY Hlf Top r4-0.vwx

T-WALL UNIT PROPERTIES

UNIT TYPE	H	W	S	Tf*	SH	VOLUME*	WEIGHT*
3.0x7.5x10 Hlf Top	3'0"	7'6"	10'0"	8"	2'6"	0.97 cy	3,924 lbs
3.5x7.5x10 Hlf Top	3'6"	7'6"	10'0"	8"	2'6"	1.06 cy	4,299 lbs
4.0x7.5x10 Hlf Top	4'0"	7'6"	10'0"	8"	2'6"	1.15 cy	4,674 lbs
4.5x7.5x10 Hlf Top	4'6"	7'6"	10'0"	8"	2'6"	1.25 cy	5,049 lbs
5.0x7.5x10 Hlf Top	5'0"	7'6"	10'0"	8"	2'6"	1.34 cy	5,424 lbs
5.5x7.5x10 Hlf Top	5'6"	7'6"	10'0"	8"	2'6"	1.43 cy	5,799 lbs
6.0x7.5x10 Hlf Top	6'0"	7'6"	10'0"	8"	2'6"	1.52 cy	6,174 lbs
6.5x7.5x10 Hlf Top	6'6"	7'6"	10'0"	8"	2'6"	1.62 cy	6,549 lbs
7.0x7.5x10 Hlf Top	7'0"	7'6"	10'0"	8"	2'6"	1.71 cy	6,924 lbs
7.5x7.5x10 Hlf Top	7'6"	7'6"	10'0"	8"	2'6"	1.80 cy	7,299 lbs

*** VOLUMES AND WEIGHTS ON THIS TABLE ARE BASED ON 8" FACE THICKNESS (Tf)**
FORMLINER FINISHES MAY INCREASE FACE THICKNESS, VOLUME AND WEIGHT.

LIFTING INSERT DATA

UNIT TYPE	DISTANCE TO CENTROID FROM FRONT FACE	DISTANCE TO INSERT #1 FROM FRONT FACE	DISTANCE TO INSERT #2 FROM FRONT FACE
3.0x7.5x10 Hlf Top	2'4 1/2"	4"	5'6"
3.5x7.5x10 Hlf Top	2'2 1/4"	4"	3'6"
4.0x7.5x10 Hlf Top	2'0 1/2"	4"	3'6"
4.5x7.5x10 Hlf Top	1'10 7/8"	4"	3'6"
5.0x7.5x10 Hlf Top	1'9 5/8"	4"	3'6"
5.5x7.5x10 Hlf Top	1'8 1/2"	4"	3'6"
6.0x7.5x10 Hlf Top	1'7 1/2"	4"	3'6"
6.5x7.5x10 Hlf Top	1'6 5/8"	4"	3'6"
7.0x7.5x10 Hlf Top	1'5 3/4"	4"	3'6"
7.5x7.5x10 Hlf Top	1'5 1/8"	4"	3'6"

REBAR SCHEDULES

3.0x7.5x10 Hlf Top — **REBAR SCHEDULES**

Unit Dims	Bar Mark	Qnty	Size	Length	Dim "A"	Bar Weight	Remarks
H=3'0"	H-1	4 ea	#4	7'2"		19.15 lbs	
W=7'6"	U-1	10 ea	#3	3'9"		14.10 lbs	
S=10'0"	V-2	6 ea	#5	2'8"		16.69 lbs	
SH=2'6"	S-1	4 ea	#4	4'0 1/4"		10.74 lbs	
	TB-1	4 ea	#4	13'0 1/4"	9'4 3/4"	34.79 lbs	
						95.47 lbs	

3.5x7.5x10 Hlf Top — **REBAR SCHEDULES**

Unit Dims	Bar Mark	Qnty	Size	Length	Dim "A"	Bar Weight	Remarks
H=3'6"	H-1	4 ea	#4	7'2"		19.15 lbs	
W=7'6"	U-1	10 ea	#3	3'9"		14.10 lbs	
S=10'0"	V-2	6 ea	#5	3'2"		19.82 lbs	
SH=2'6"	S-1	4 ea	#4	4'0 1/4"		10.74 lbs	
	TB-1	4 ea	#4	13'0 1/4"	9'4 3/4"	34.79 lbs	
						98.60 lbs	

4.0x7.5x10 Hlf Top — **REBAR SCHEDULES**

Unit Dims	Bar Mark	Qnty	Size	Length	Dim "A"	Bar Weight	Remarks
H=4'0"	H-1	5 ea	#4	7'2"		23.94 lbs	
W=7'6"	U-1	10 ea	#3	3'9"		14.10 lbs	
S=10'0"	V-2	6 ea	#5	3'8"		22.95 lbs	
SH=2'6"	S-1	4 ea	#4	4'0 1/4"		10.74 lbs	
	TB-1	4 ea	#4	13'0 1/4"	9'4 3/4"	34.79 lbs	
						106.52 lbs	

4.5x7.5x10 Hlf Top — **REBAR SCHEDULES**

Unit Dims	Bar Mark	Qnty	Size	Length	Dim "A"	Bar Weight	Remarks
H=4'6"	H-1	5 ea	#4	7'2"		23.94 lbs	
W=7'6"	U-1	10 ea	#3	3'9"		14.10 lbs	
S=10'0"	V-2	6 ea	#5	4'2"		26.08 lbs	
SH=2'6"	S-1	4 ea	#4	4'0 1/4"		10.74 lbs	
	TB-1	4 ea	#4	13'0 1/4"	9'4 3/4"	34.79 lbs	
						109.65 lbs	

5.0x7.5x10 Hlf Top — **REBAR SCHEDULES**

Unit Dims	Bar Mark	Qnty	Size	Length	Dim "A"	Bar Weight	Remarks
H=5'0"	H-1	6 ea	#4	7'2"		28.72 lbs	
W=7'6"	U-1	10 ea	#3	3'9"		14.10 lbs	
S=10'0"	V-2	6 ea	#5	4'8"		29.20 lbs	
SH=2'6"	S-1	4 ea	#4	4'0 1/4"		10.74 lbs	
	TB-1	4 ea	#4	13'0 1/4"	9'4 3/4"	34.79 lbs	
						117.56 lbs	

REBAR SCHEDULES

5.5x7.5x10 Hlf Top — **REBAR SCHEDULES**

Unit Dims	Bar Mark	Qnty	Size	Length	Dim "A"	Bar Weight	Remarks
H=5'6"	H-1	6 ea	#4	7'2"		28.72 lbs	
W=7'6"	U-1	10 ea	#3	3'9"		14.10 lbs	
S=10'0"	V-2	6 ea	#5	5'2"		32.33 lbs	
SH=2'6"	S-1	4 ea	#4	4'0 1/4"		10.74 lbs	
	TB-1	4 ea	#5	13'0 1/4"	9'4 3/4"	54.32 lbs	
						140.22 lbs	

6.0x7.5x10 Hlf Top — **REBAR SCHEDULES**

Unit Dims	Bar Mark	Qnty	Size	Length	Dim "A"	Bar Weight	Remarks
H=6'0"	H-1	7 ea	#4	7'2"		33.51 lbs	
W=7'6"	U-1	10 ea	#3	3'9"		14.10 lbs	
S=10'0"	V-2	6 ea	#5	5'8"		35.46 lbs	
SH=2'6"	S-1	4 ea	#4	4'0 1/4"		10.74 lbs	
	TB-1	4 ea	#5	13'0 1/4"	9'4 3/4"	54.32 lbs	
						148.14 lbs	

6.5x7.5x10 Hlf Top — **REBAR SCHEDULES**

Unit Dims	Bar Mark	Qnty	Size	Length	Dim "A"	Bar Weight	Remarks
H=6'6"	H-1	7 ea	#4	7'2"		33.51 lbs	
W=7'6"	U-1	10 ea	#3	3'9"		14.10 lbs	
S=10'0"	V-2	6 ea	#6	6'2"		55.57 lbs	
SH=2'6"	S-1	4 ea	#4	4'0 1/4"		10.74 lbs	
	TB-1	4 ea	#6	13'0 1/4"	9'4 3/4"	78.23 lbs	
						192.16 lbs	

7.0x7.5x10 Hlf Top — **REBAR SCHEDULES**

Unit Dims	Bar Mark	Qnty	Size	Length	Dim "A"	Bar Weight	Remarks
H=7'0"	H-1	8 ea	#4	7'2"		38.30 lbs	
W=7'6"	U-1	10 ea	#3	3'9"		14.10 lbs	
S=10'0"	V-2	6 ea	#6	6'8"		60.08 lbs	
SH=2'6"	S-1	4 ea	#4	4'0 1/4"		10.74 lbs	
	TB-1	4 ea	#6	13'0 1/4"	9'4 3/4"	78.23 lbs	
						201.45 lbs	

7.5x7.5x10 Hlf Top — **REBAR SCHEDULES**

Unit Dims	Bar Mark	Qnty	Size	Length	Dim "A"	Bar Weight	Remarks
H=7'6"	H-1	8 ea	#4	7'2"		38.30 lbs	
W=7'6"	U-1	10 ea	#3	3'9"		14.10 lbs	
S=10'0"	V-2	6 ea	#7	7'2"		87.89 lbs	
SH=2'6"	S-1	4 ea	#4	4'0 1/4"		10.74 lbs	
	TB-1	4 ea	#7	13'0 1/4"	9'4 3/4"	106.46 lbs	
						257.49 lbs	

4/13/2017

DESIGNER

THE NEEL COMPANY
8328-D TRAFORD LANE
SPRINGFIELD, VA 22152
PH: (703) 913-7858
FX: (703) 913-7859
Web: www.neelco.com

This drawing contains information proprietary to The Neel Company. The Neel Company is the exclusive licensee of the T-WALL® patent. © 2017, The Neel Company

DATE: 03-23-17
SCALE: NO SCALE
DESIGNED: JMC
DRAWN: CJW
CHECKED: CCG/KD
TNC JOB #: TW3634
TNC SHT #47 OF 67

PA DOT DWG # 87-402 PE (REVISION IV)

COMMONWEALTH OF PENNSYLVANIA
DEPARTMENT OF TRANSPORTATION
BUREAU OF PROJECT DELIVERY

T-WALL® STANDARDS
PREFABRICATED T-WALL® RETAINING WALL SYSTEM

SHOP DRAWINGS
REBAR
HALF TOP UNIT (IV)

SHEET 47 OF 67

87-402 PE

DATE: 03-23-17 TNC JOB #: TW3634 PLOT DATE AND TIME: Wednesday, March 22, 2017 15:48:28 CAD FILE NAME: 044 Rebar - RWY Hlf Top r4-0.vwx

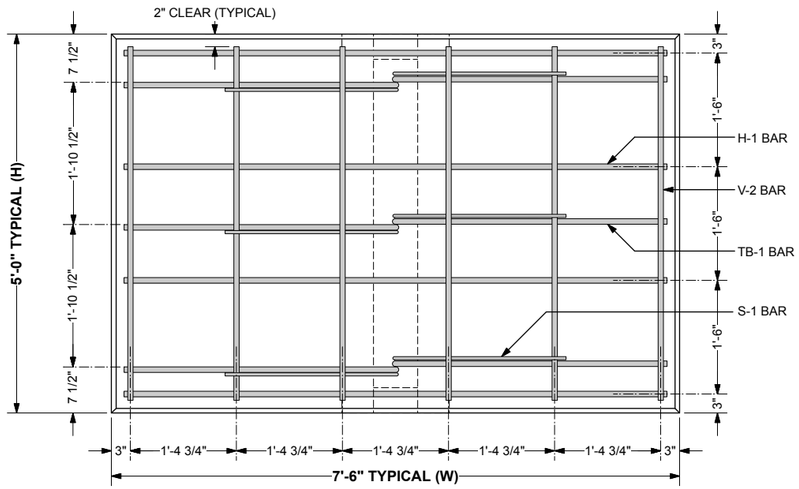

3 **FRONT VIEW - 5.0 x 7.5 x 3.75 Std Cnr SHOWN**
Scale: 1" = 1'-0"

(U-1 BARS IN STEM OMITTED FOR CLARITY)

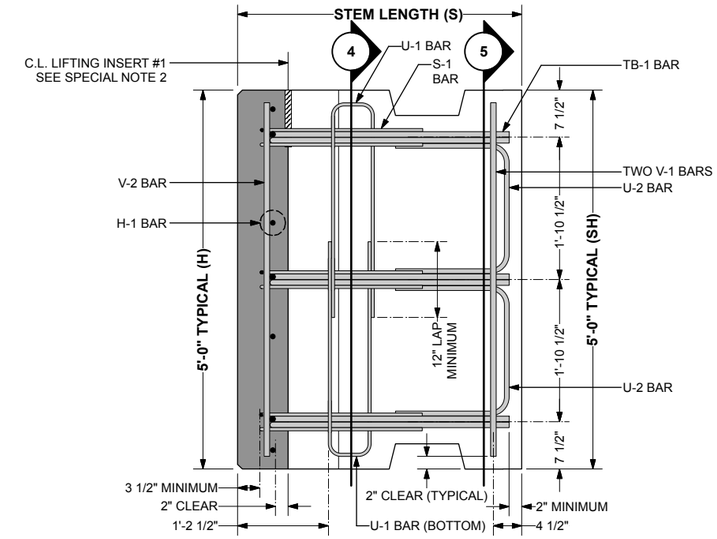

2 **SIDE VIEW - 5.0 x 7.5 x 3.75 Std Cnr SHOWN**
Scale: 1" = 1'-0"

T-WALL UNIT PROPERTIES

UNIT TYPE	H	W	S	Tf*	SH	VOLUME*	WEIGHT*
5.0x7.5x3.75 Std Cnr	5'0"	7'6"	3'9"	8"	5'0"	1.33 cy	5,386 lbs

*** VOLUMES AND WEIGHTS ON THIS TABLE ARE BASED ON 8" FACE THICKNESS (Tf)**
FORMLINER FINISHES MAY INCREASE FACE THICKNESS, VOLUME AND WEIGHT.

LIFTING INSERT DATA

UNIT TYPE	DISTANCE TO CENTROID FROM FRONT FACE	DISTANCE TO INSERT #1 FROM FRONT FACE	DISTANCE TO INSERT #2 FROM FRONT FACE
5.0x7.5x3.75 Std Cnr	9 3/4"	9 3/4"	N/A

REBAR SCHEDULES

5.0x7.5x3.75 Std Cnr — **HIGHWAY REBAR**

Unit Dims	Bar Mark	Qnty	Size	Length	Dim "A"	Bar Weight	Remarks
H=5'0"	H-1	4 ea	#5	7'2"		29.90 lbs	
W=7'6"	U-1	2 ea	#3	6'3"		4.70 lbs	
S=3'9"	V-2	6 ea	#4	4'8"		18.70 lbs	
SH=5'0"	S-1	6 ea	#4	4'0 1/4"		16.12 lbs	
	TB-1	6 ea	#5	6'9 1/4"	3'1 3/4"	42.37 lbs	
	U-2	2 ea	#6	4'8 1/2"		14.14 lbs	
	V-1	2 ea	#4	4'8"		6.23 lbs	
						132.17 lbs	

2" COVER ON ALL BARS UNLESS OTHERWISE NOTED

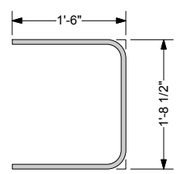

9 **BAR BEND - U-2 REBAR**
Scale: 1" = 1'-0"

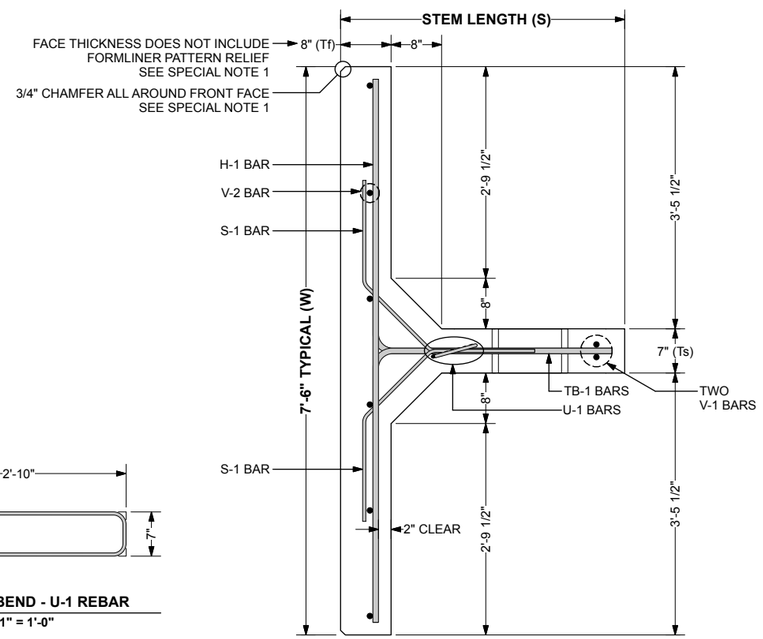

1 **PLAN VIEW - 5.0 x 7.5 x 3.75 Std Cnr SHOWN**
Scale: 1" = 1'-0"

SPECIAL NOTES:

1. FRONT FACE OF T-WALL® UNITS FINISH TREATMENT:
   - PER CONTRACT DRAWINGS AND SPECS.
   - MINIMUM FRONT FACE THICKNESS SHALL BE 8"
2. LIFTING INSERTS:
   - MEADOW BURKE RAPID LIFT RL-22 LIFTING INSERT WITH RL-32 REBAR OR DAYTON SUPERIOR P-53 5-TON SWIFT LIFT EYE WITH P-60 TENSION BAR.
   - 8000 LBS (4 TONS) MINIMUM RATED WORKING LOAD CAPACITY.
   - REFER TO LIFTING INSERT DATA TABLE FOR INSERT LOCATIONS.
   - LIFTING INSERTS TO BE GALVANIZED

GENERAL NOTES:

1. PRIMARY REFERENCE: AASHTO LRFD BRIDGE SPECIFICATIONS, 5th EDITION, 2010 WITH INTERIM REVISIONS
2. MINIMUM CONCRETE COVER IS DESIGNED FOR 2" ON ALL BARS. TOLERANCES PER CONSTRUCTION SPECIFICATIONS SECTION 2.0.
3. ALL MATERIAL AND TOLERANCES IN ACCORDS TO T-WALL® CONSTRUCTION SPECIFICATIONS, SECTION 2.0 MATERIALS.
4. REBAR:
   - SEE CONSTRUCTION SPECIFICATION, SECTION 2.0 MATERIALS OR PER CONTRACT DRAWINGS AND SPECS.
5. CONCRETE:
   - F'c = 5000 psi @ 28 DAYS

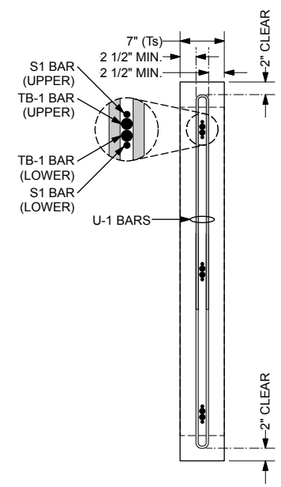

4 **SECTION THROUGH STEM**
Scale: 1" = 1'-0"

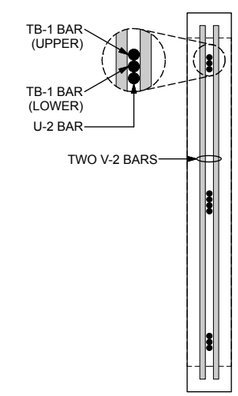

5 **SECTION THROUGH STEM**
Scale: 1" = 1'-0"

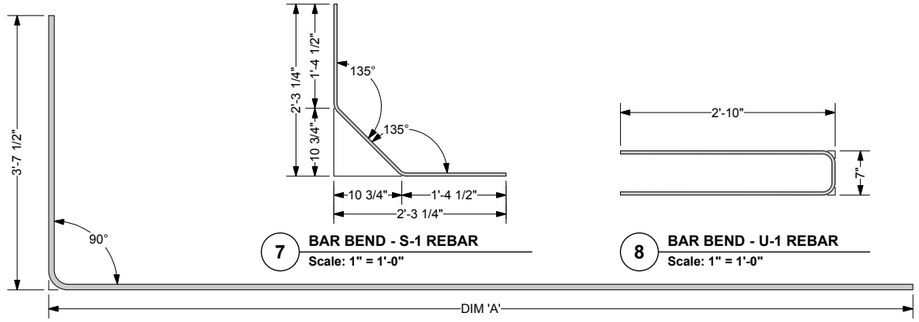

6 **BAR BEND - TB-1 REBAR**
Scale: 1" = 1'-0"

7 **BAR BEND - S-1 REBAR**
Scale: 1" = 1'-0"

8 **BAR BEND - U-1 REBAR**
Scale: 1" = 1'-0"

4/13/2017

DESIGNER

THE NEEL COMPANY
8328-D TRAFORD LANE
SPRINGFIELD, VA 22152
PH: (703) 913-7858
FX: (703) 913-7859
Web: www.neelco.com

This drawing contains information proprietary to The Neel Company. The Neel Company is the exclusive licensee of the T-WALL® patent. © 2017, The Neel Company

DATE:	03-23-17
SCALE:	AS NOTED
DESIGNED:	JMC
DRAWN:	CJW
CHECKED:	CCG/KD
TNC JOB #:	TW3634
TNC SHT #:	48 OF 67

PA DOT DWG # 87-402 PE (REVISION IV)

COMMONWEALTH OF PENNSYLVANIA
DEPARTMENT OF TRANSPORTATION
BUREAU OF PROJECT DELIVERY

T-WALL® STANDARDS
PREFABRICATED T-WALL® RETAINING WALL SYSTEM

SHOP DRAWINGS
REBAR
STANDARD CORNER UNITS - 3'-9" STEM

SHEET 48 OF 67

87-402 PE

DATE: 03-23-17 TNC JOB #: TW3634 PLOT DATE AND TIME: Wednesday, March 22, 2017 15:50:36 CAD FILE NAME: 048 Rebar - RWY Std Cnr 3.42 r4-0.vwx

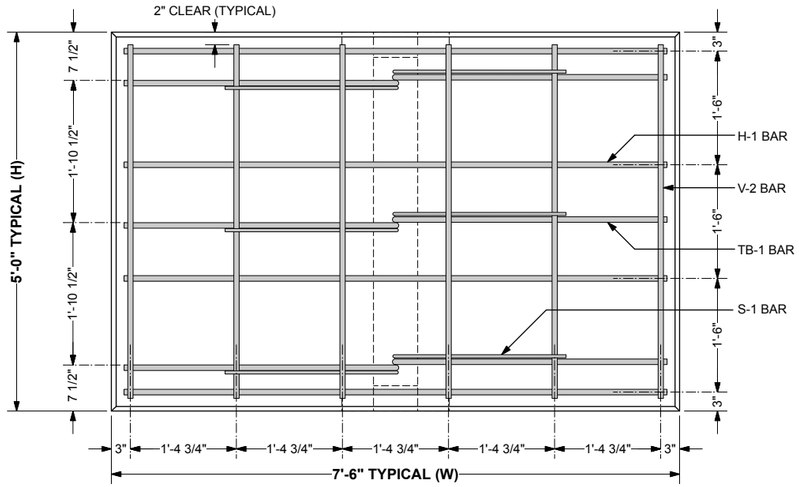

3 **FRONT VIEW - 5.0 x 7.5 x 4.08 Std Cnr SHOWN**
Scale: 1" = 1'-0"

(U-1 BARS IN STEM OMITTED FOR CLARITY)

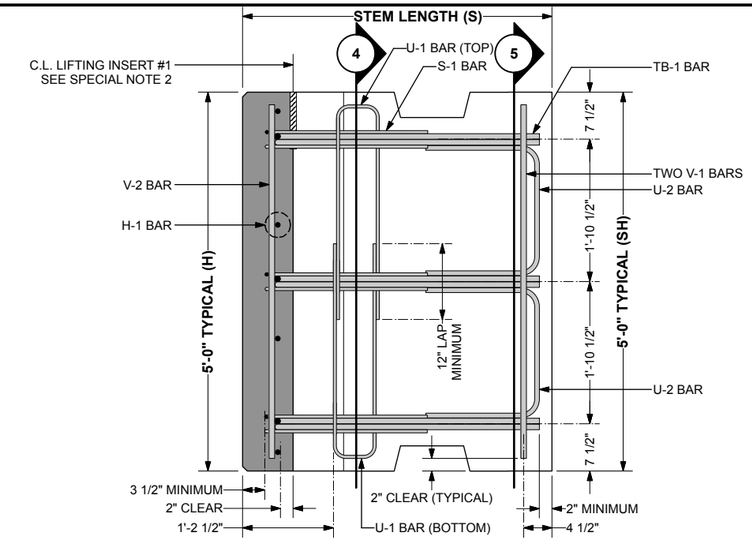

2 **SIDE VIEW - 5.0 x 7.5 x 4.08 Std Cnr SHOWN**
Scale: 1" = 1'-0"

T-WALL UNIT PROPERTIES

UNIT TYPE	H	W	S	Tf*	SH	VOLUME*	WEIGHT*
5.0x7.5x4.08 Std Cnr	5'0"	7'6"	4'1"	8"	5'0"	1.36 cy	5,521 lbs

*** VOLUMES AND WEIGHTS ON THIS TABLE ARE BASED ON 8" FACE THICKNESS (Tf)**
FORMLINER FINISHES MAY INCREASE FACE THICKNESS, VOLUME AND WEIGHT.

LIFTING INSERT DATA

UNIT TYPE	DISTANCE TO CENTROID FROM FRONT FACE	DISTANCE TO INSERT #1 FROM FRONT FACE	DISTANCE TO INSERT #2 FROM FRONT FACE
5.0x7.5x4.08 Std Cnr	10 5/8"	10 5/8"	N/A

REBAR SCHEDULES

5.0x7.5x4.08 Std Cnr **HIGHWAY REBAR**

Unit Dims	Bar Mark	Qnty	Size	Length	Dim "A"	Bar Weight	Remarks
H=5'0"	H-1	4 ea	#4	7'2"		19.15 lbs	
W=7'6"	U-1	2 ea	#3	6'3"		4.70 lbs	
S=4'1"	V-2	6 ea	#4	4'8"		18.70 lbs	
SH=5'0"	S-1	6 ea	#4	4'0 1/4"		16.12 lbs	
	TB-1	6 ea	#4	7'1 1/4"	3'5 3/4"	28.46 lbs	
	U-2	2 ea	#6	4'8 1/2"		14.14 lbs	
	V-1	2 ea	#4	4'8"		6.23 lbs	
						107.51 lbs	

2" COVER ON ALL BARS UNLESS OTHERWISE NOTED

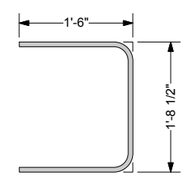

9 **BAR BEND - U-2 REBAR**
Scale: 1" = 1'-0"

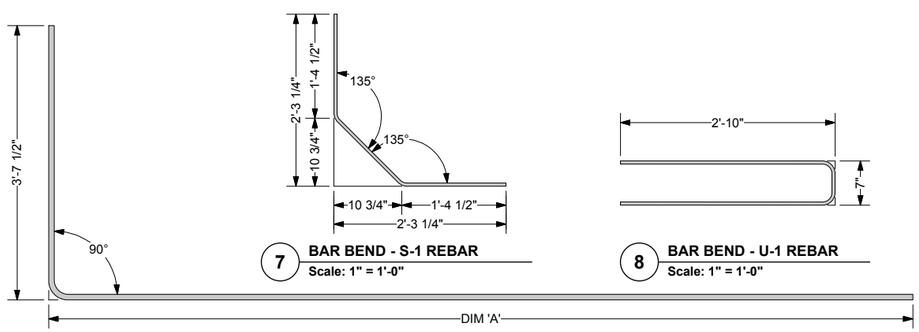

6 **BAR BEND - TB-1 REBAR**
Scale: 1" = 1'-0"

7 **BAR BEND - S-1 REBAR**
Scale: 1" = 1'-0"

8 **BAR BEND - U-1 REBAR**
Scale: 1" = 1'-0"

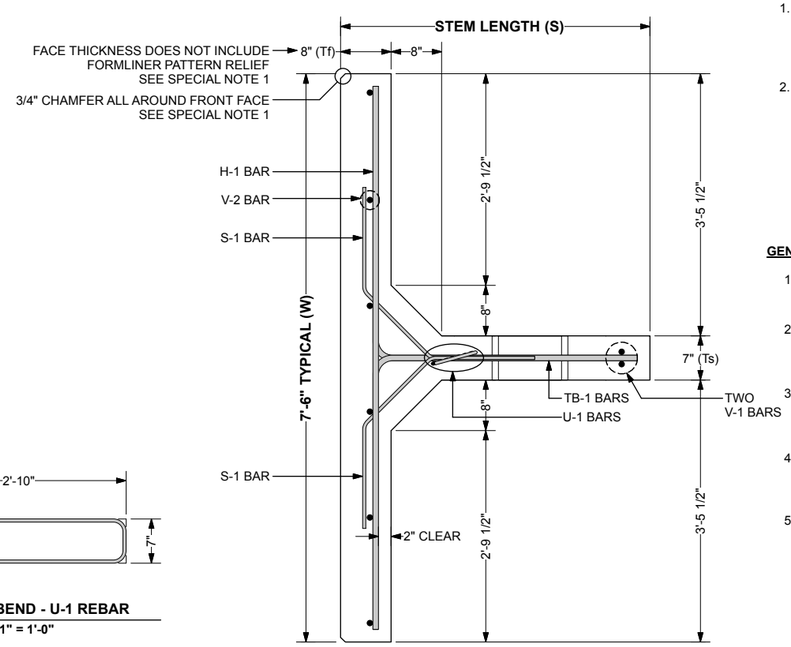

1 **PLAN VIEW - 5.0 x 7.5 x 4.08 Std Cnr SHOWN**
Scale: 1" = 1'-0"

SPECIAL NOTES:

1. FRONT FACE OF T-WALL® UNITS FINISH TREATMENT:
   - PER CONTRACT DRAWINGS AND SPECS.
   - MINIMUM FRONT FACE THICKNESS SHALL BE 8"
2. LIFTING INSERTS:
   - MEADOW BURKE RAPID LIFT RL-22 LIFTING INSERT WITH RL-32 REBAR OR DAYTON SUPERIOR P-53 5-TON SWIFT LIFT EYE WITH P-60 TENSION BAR.
   - 8000 LBS (4 TONS) MINIMUM RATED WORKING LOAD CAPACITY.
   - REFER TO LIFTING INSERT DATA TABLE FOR INSERT LOCATIONS.
   - LIFTING INSERTS TO BE GALVANIZED

GENERAL NOTES:

1. PRIMARY REFERENCE: AASHTO LRFD BRIDGE SPECIFICATIONS, 5th EDITION, 2010 WITH INTERIM REVISIONS
2. MINIMUM CONCRETE COVER IS DESIGNED FOR 2" ON ALL BARS. TOLERANCES PER CONSTRUCTION SPECIFICATIONS SECTION 2.0.
3. ALL MATERIAL AND TOLERANCES IN ACCORDS TO T-WALL® CONSTRUCTION SPECIFICATIONS, SECTION 2.0 MATERIALS.
4. REBAR:
   - SEE CONSTRUCTION SPECIFICATION, SECTION 2.0 MATERIALS OR PER CONTRACT DRAWINGS AND SPECS.
5. CONCRETE:
   - F'c = 5000 psi @ 28 DAYS

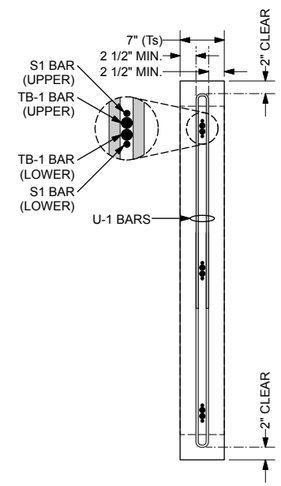

4 **SECTION THROUGH STEM**
Scale: 1" = 1'-0"

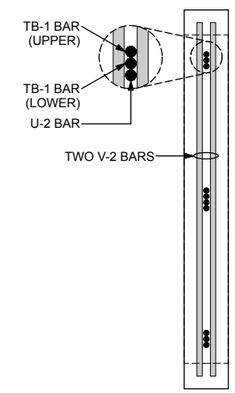

5 **SECTION THROUGH STEM**
Scale: 1" = 1'-0"

4/13/2017

DESIGNER

THE NEEL COMPANY
8328-D TRAFORD LANE
SPRINGFIELD, VA 22152
PH: (703) 913-7858
FX: (703) 913-7859
Web: www.neelco.com

This drawing contains information proprietary to The Neel Company. The Neel Company is the exclusive licensee of the T-WALL® patent. © 2017, The Neel Company

DATE:	03-23-17
SCALE:	AS NOTED
DESIGNED:	JMC
DRAWN:	CJW
CHECKED:	CCG/KD
TNC JOB #:	TW3634
TNC SHT #:	49 OF 67

PA DOT DWG # 87-402 PE (REVISION IV)

COMMONWEALTH OF PENNSYLVANIA
DEPARTMENT OF TRANSPORTATION
BUREAU OF PROJECT DELIVERY

T-WALL® STANDARDS
PREFABRICATED T-WALL® RETAINING WALL SYSTEM

SHOP DRAWINGS
REBAR
STANDARD CORNER UNITS - 4'-1" STEM

SHEET 49 OF 67

87-402 PE

DATE: 03-23-17 TNC JOB #: TW3634 PLOT DATE AND TIME: Wednesday, March 22, 2017 15:50:28 CAD FILE NAME: 049 Rebar - RWY Std Cnr 4.08 r4-0.vwx

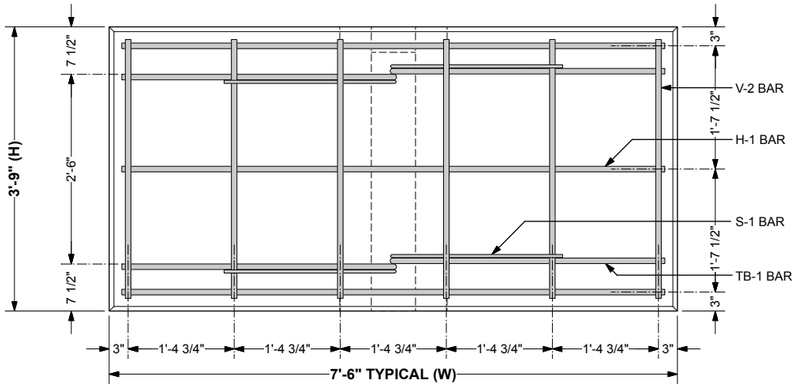

3 **FRONT VIEW - 3.75 x 7.5 x 3.75 Tqr Cnr SHOWN**
Scale: 1" = 1'-0"
(U-1 BARS IN STEM OMITTED FOR CLARITY)

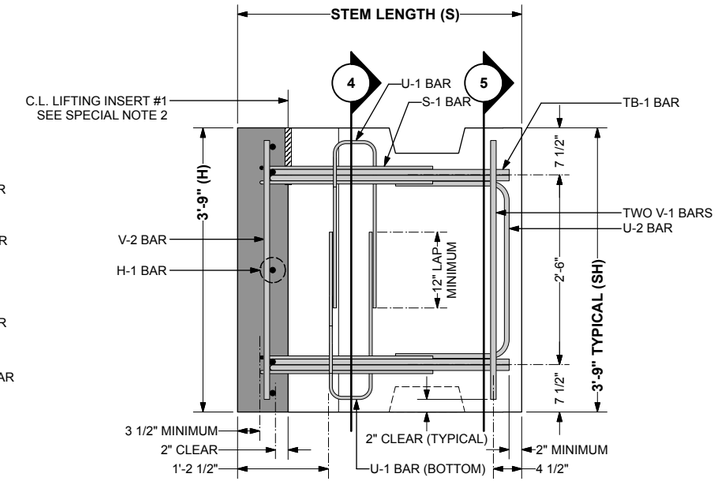

2 **SIDE VIEW - 3.75 x 7.5 x 3.75 Tqr Cnr SHOWN**
Scale: 1" = 1'-0"

T-WALL UNIT PROPERTIES

UNIT TYPE	H	W	S	Tf*	SH	VOLUME*	WEIGHT*
3.75x7.5x3.75 Tqr Cnr	3'9"	7'6"	3'9"	8"	3'9"	1.00 cy	4,051 lbs

*** VOLUMES AND WEIGHTS ON THIS TABLE ARE BASED ON 8" FACE THICKNESS (Tf)**
FORMLINER FINISHES MAY INCREASE FACE THICKNESS, VOLUME AND WEIGHT.

LIFTING INSERT DATA

UNIT TYPE	DISTANCE TO CENTROID FROM FRONT FACE	DISTANCE TO INSERT #1 FROM FRONT FACE	DISTANCE TO INSERT #2 FROM FRONT FACE
3.75x7.5x3.75 Tqr Cnr	9 5/8"	9 5/8"	N/A

REBAR SCHEDULES

3.75x7.5x3.75 Tqr Cnr — **HIGHWAY REBAR**

Unit Dims	Bar Mark	Qnty	Size	Length	Dim "A"	Bar Weight	Remarks
H=3'9"	H-1	3 ea	#5	7'2"		22.42 lbs	
W=7'6"	U-1	2 ea	#3	5'0"		3.76 lbs	
S=3'9"	V-2	6 ea	#4	3'5"		13.69 lbs	
SH=3'9"	S-1	4 ea	#4	4'0 1/4"		10.74 lbs	
	TB-1	4 ea	#5	6'9 1/4"	3'1 3/4"	28.25 lbs	
	U-2	1 ea	#6	5'4"		8.01 lbs	
	V-1	2 ea	#4	3'5"		4.56 lbs	
						91.45 lbs	

2" COVER ON ALL BARS UNLESS OTHERWISE NOTED

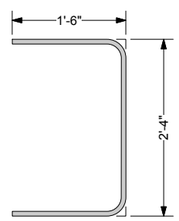

9 **BAR BEND - U-2 REBAR**
Scale: 1" = 1'-0"

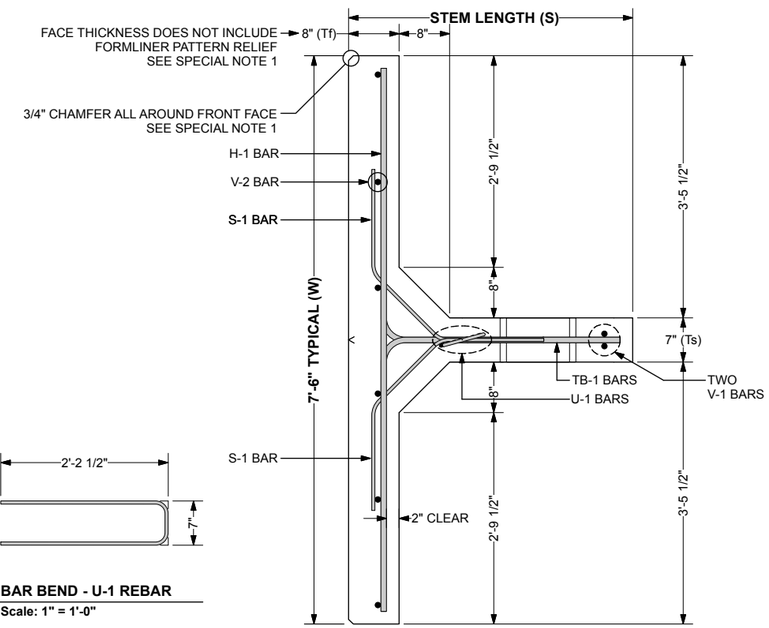

1 **PLAN VIEW - 3.75 x 7.5 x 3.75 Tqr Cnr SHOWN**
Scale: 1" = 1'-0"

SPECIAL NOTES:

1. FRONT FACE OF T-WALL® UNITS FINISH TREATMENT:
   - PER CONTRACT DRAWINGS AND SPECS.
   - MINIMUM FRONT FACE THICKNESS SHALL BE 8"
2. LIFTING INSERTS:
   - MEADOW BURKE RAPID LIFT RL-22 LIFTING INSERT WITH RL-32 REBAR OR DAYTON SUPERIOR P-53 5-TON SWIFT LIFT EYE WITH P-60 TENSION BAR.
   - 8000 LBS (4 TONS) MINIMUM RATED WORKING LOAD CAPACITY.
   - REFER TO LIFTING INSERT DATA TABLE FOR INSERT LOCATIONS.
   - LIFTING INSERTS TO BE GALVANIZED

GENERAL NOTES:

1. PRIMARY REFERENCE: AASHTO LRFD BRIDGE SPECIFICATIONS, 5th EDITION, 2010 WITH INTERIM REVISIONS
2. MINIMUM CONCRETE COVER IS DESIGNED FOR 2" ON ALL BARS. TOLERANCES PER CONSTRUCTION SPECIFICATIONS SECTION 2.0.
3. ALL MATERIAL AND TOLERANCES IN ACCORDS TO T-WALL® CONSTRUCTION SPECIFICATIONS, SECTION 2.0 MATERIALS.
4. REBAR:
   - SEE CONSTRUCTION SPECIFICATION, SECTION 2.0 MATERIALS OR PER CONTRACT DRAWINGS AND SPECS.
5. CONCRETE:
   - F'c = 5000 psi @ 28 DAYS

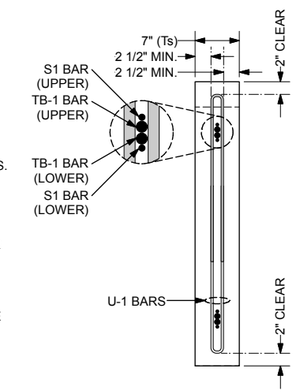

4 **SECTION THROUGH STEM**
Scale: 1" = 1'-0"

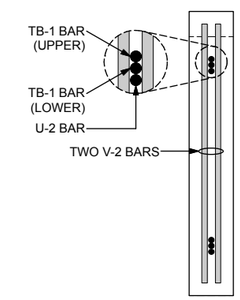

5 **SECTION THROUGH STEM**
Scale: 1" = 1'-0"

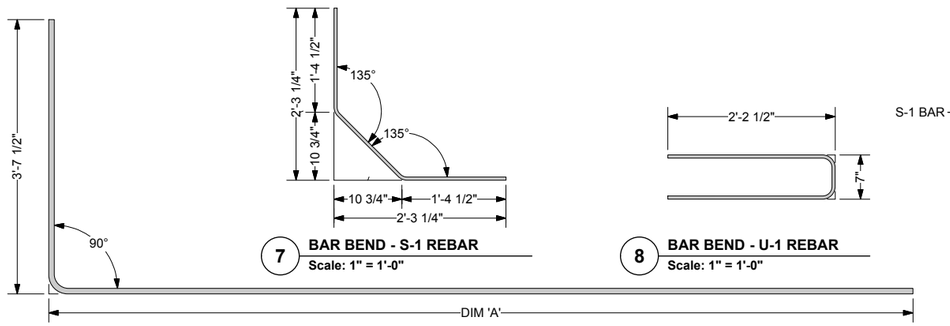

6 **BAR BEND - TB-1 REBAR**
Scale: 1" = 1'-0"

7 **BAR BEND - S-1 REBAR**
Scale: 1" = 1'-0"

8 **BAR BEND - U-1 REBAR**
Scale: 1" = 1'-0"

PA DOT DWG # 87-402 PE (REVISION IV)

COMMONWEALTH OF PENNSYLVANIA
DEPARTMENT OF TRANSPORTATION
BUREAU OF PROJECT DELIVERY

T-WALL® STANDARDS
PREFABRICATED T-WALL® RETAINING WALL SYSTEM

SHOP DRAWINGS
REBAR
THREE QUARTER CORNER UNITS - 3'-9" STEM

DESIGNER

THE NEEL COMPANY
8328-D TRAFORD LANE
SPRINGFIELD, VA 22152
PH: (703) 913-7858
FX: (703) 913-7859
Web: www.neelco.com

This drawing contains information proprietary to The Neel Company. The Neel Company is the exclusive licensee of the T-WALL® patent.
© 2017, The Neel Company

4/13/2017

DATE:	03-23-17
SCALE:	AS NOTED
DESIGNED:	JMC
DRAWN:	CJW
CHECKED:	CCG/KD
TNC JOB #:	TW3634
TNC SHT #:	50 OF 67

SHEET 50 OF 67

87-402 PE

DATE: 03-23-17 TNC JOB #: TW3634 PLOT DATE AND TIME: Wednesday, March 22, 2017 15:50:22 CAD FILE NAME: 050 Rebar - RWY Tqr Cnr 3.42 r4-0.vwx

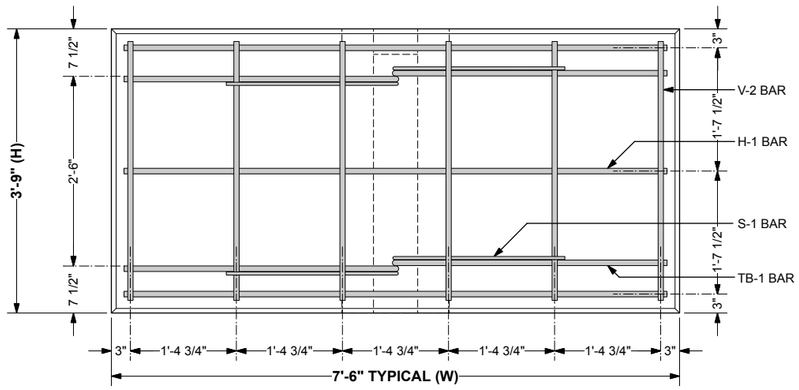

3 **FRONT VIEW - 3.75 x 7.5 x 4.08 Tqr Cnr SHOWN**
Scale: 1" = 1'-0"
(U-1 BARS IN STEM OMITTED FOR CLARITY)

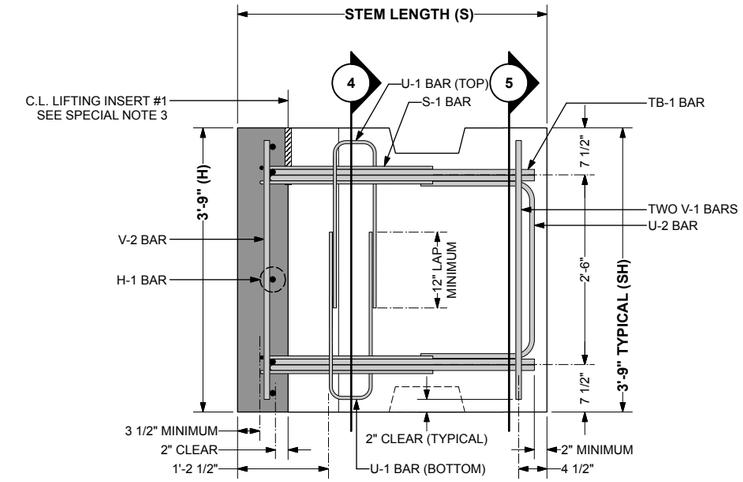

2 **SIDE VIEW - 3.75 x 7.5 x 4.08 Tqr Cnr SHOWN**
Scale: 1" = 1'-0"

T-WALL UNIT PROPERTIES

UNIT TYPE	H	W	S	Tf*	SH	VOLUME*	WEIGHT*
3.75x7.5x4.08 Tqr Cnr	3'9"	7'6"	4'1"	8"	3'9"	1.03 cy	4,155 lbs

*** VOLUMES AND WEIGHTS ON THIS TABLE ARE BASED ON 8" FACE THICKNESS (Tf)**
FORMLINER FINISHES MAY INCREASE FACE THICKNESS, VOLUME AND WEIGHT.

LIFTING INSERT DATA

UNIT TYPE	DISTANCE TO CENTROID FROM FRONT FACE	DISTANCE TO INSERT #1 FROM FRONT FACE	DISTANCE TO INSERT #2 FROM FRONT FACE
3.75x7.5x4.08 Tqr Cnr	10 1/2"	10 1/2"	N/A

REBAR SCHEDULES

3.75x7.5x4.08 Tqr Cnr **HIGHWAY REBAR**

Unit Dims	Bar Mark	Qnty	Size	Length	Dim "A"	Bar Weight	Remarks
H=3'9"	H-1	3 ea	#4	7'2"		14.36 lbs	
W=7'6"	U-1	2 ea	#3	5'0"		3.76 lbs	
S=4'1"	V-2	6 ea	#4	3'5"		13.69 lbs	
SH=3'9"	S-1	4 ea	#4	4'0 1/4"		10.74 lbs	
	TB-1	4 ea	#4	7'1 1/4"	3'5 3/4"	18.97 lbs	
	U-2	1 ea	#6	5'4"		8.01 lbs	
	V-1	2 ea	#4	3'5"		4.56 lbs	
						74.11 lbs	

2" COVER ON ALL BARS UNLESS OTHERWISE NOTED

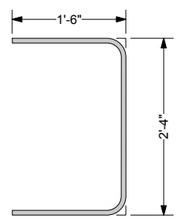

9 **BAR BEND - U-2 REBAR**
Scale: 1" = 1'-0"

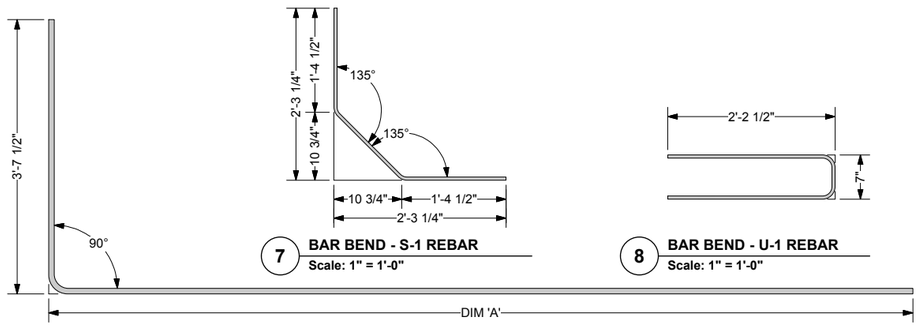

6 **BAR BEND - TB-1 REBAR**
Scale: 1" = 1'-0"

7 **BAR BEND - S-1 REBAR**
Scale: 1" = 1'-0"

8 **BAR BEND - U-1 REBAR**
Scale: 1" = 1'-0"

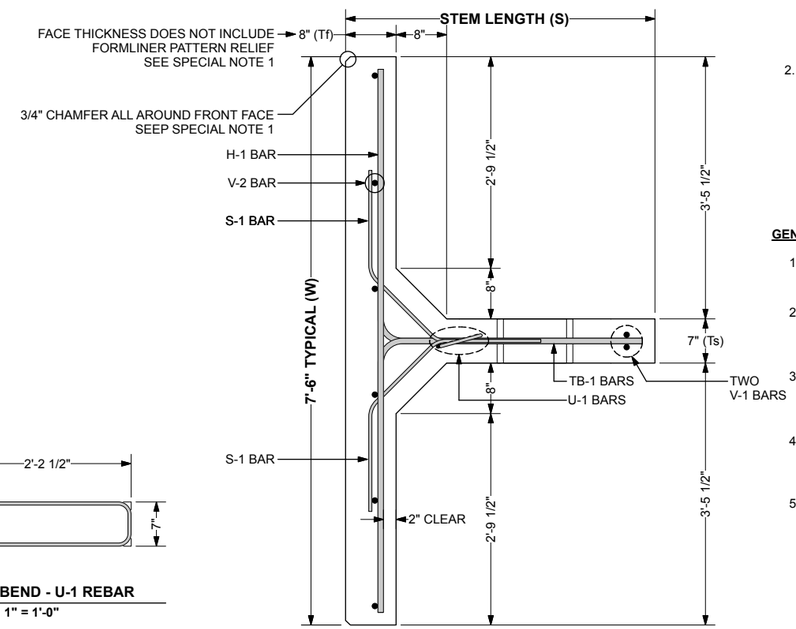

1 **PLAN VIEW - 3.75 x 7.5 x 4.08 Tqr Cnr SHOWN**
Scale: 1" = 1'-0"

SPECIAL NOTES:

1. FRONT FACE OF T-WALL® UNITS FINISH TREATMENT:
   - PER CONTRACT DRAWINGS AND SPECS.
   - MINIMUM FRONT FACE THICKNESS SHALL BE 8"
2. LIFTING INSERTS:
   - MEADOW BURKE RAPID LIFT RL-22 LIFTING INSERT WITH RL-32 REBAR OR DAYTON SUPERIOR P-53 5-TON SWIFT LIFT EYE WITH P-60 TENSION BAR.
   - 8000 LBS (4 TONS) MINIMUM RATED WORKING LOAD CAPACITY.
   - REFER TO LIFTING INSERT DATA TABLE FOR INSERT LOCATIONS.
   - LIFTING INSERTS TO BE GALVANIZED

GENERAL NOTES:

1. PRIMARY REFERENCE: AASHTO LRFD BRIDGE SPECIFICATIONS, 5th EDITION, 2010 WITH INTERIM REVISIONS
2. MINIMUM CONCRETE COVER IS DESIGNED FOR 2" ON ALL BARS. TOLERANCES PER CONSTRUCTION SPECIFICATIONS SECTION 2.0.
3. ALL MATERIAL AND TOLERANCES IN ACCORDS TO T-WALL® CONSTRUCTION SPECIFICATIONS, SECTION 2.0 MATERIALS.
4. REBAR:
   - SEE CONSTRUCTION SPECIFICATION, SECTION 2.0 MATERIALS OR PER CONTRACT DRAWINGS AND SPECS.
5. CONCRETE:
   - F'c = 5000 psi @ 28 DAYS

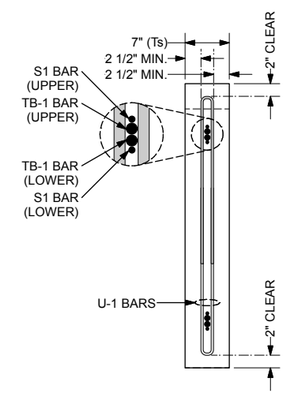

4 **SECTION THROUGH STEM**
Scale: 1" = 1'-0"

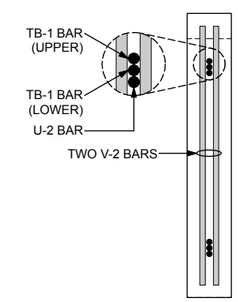

5 **SECTION THROUGH STEM**
Scale: 1" = 1'-0"

4/13/2017

DESIGNER

THE NEEL COMPANY
8328-D TRAFORD LANE
SPRINGFIELD, VA 22152
PH: (703) 913-7858
FX: (703) 913-7859
Web: www.neelco.com

This drawing contains information proprietary to The Neel Company. The Neel Company is the exclusive licensee of the T-WALL® patent. © 2017, The Neel Company

DATE:	03-23-17
SCALE:	AS NOTED
DESIGNED:	JMC
DRAWN:	CJW
CHECKED:	CCG/KD
TNC JOB #:	TW3634
TNC SHT #51 OF 67	

PA DOT DWG # 87-402 PE (REVISION IV)

COMMONWEALTH OF PENNSYLVANIA
DEPARTMENT OF TRANSPORTATION
BUREAU OF PROJECT DELIVERY

T-WALL® STANDARDS
PREFABRICATED T-WALL® RETAINING WALL SYSTEM

SHOP DRAWINGS
REBAR
THREE QUARTER CORNER UNITS - 4'-1" STEM

SHEET 51 OF 67

87-402 PE

DATE: 03-23-17 TNC JOB #: TW3634 PLOT DATE AND TIME: Wednesday, March 22, 2017 15:50:14 CAD FILE NAME: 051 Rebar - RWY Tqr Cnr 4.08 r4-0.vwx

T-WALL UNIT PROPERTIES

UNIT TYPE	H	W	S	Tf*	SH	VOLUME*	WEIGHT*
2.5x7.5x3.75 Hlf Cnr	2'6"	7'6"	3'9"	8"	2'6"	0.66 cy	2,670 lbs

*** VOLUMES AND WEIGHTS ON THIS TABLE ARE BASED ON 8" FACE THICKNESS (Tf)**
FORMLINER FINISHES MAY INCREASE FACE THICKNESS, VOLUME AND WEIGHT.

LIFTING INSERT DATA

UNIT TYPE	DISTANCE TO CENTROID FROM FRONT FACE	DISTANCE TO INSERT #1 FROM FRONT FACE	DISTANCE TO INSERT #2 FROM FRONT FACE
2.5x7.5x3.75 Hlf Cnr	9 1/2"	9 1/2"	N/A

REBAR SCHEDULES

2.5x7.5x3.75 Hlf Cnr — **HIGHWAY REBAR**

Unit Dims	Bar Mark	Qnty	Size	Length	Dim "A"	Bar Weight	Remarks
H=2'6"	H-1	3 ea	#4	7'2"		14.36 lbs	
W=7'6"	U-1	2 ea	#3	3'9"		2.82 lbs	
S=3'9"	V-2	6 ea	#4	2'2"		8.68 lbs	
SH=2'6"	S-1	4 ea	#4	4'0 1/4"		10.74 lbs	
	TB-1	4 ea	#4	6'9 1/4"	3'1 3/4"	18.09 lbs	
	U-2	1 ea	#6	4'1"		6.13 lbs	
	V-1	2 ea	#4	2'2"		2.89 lbs	
						63.73 lbs	

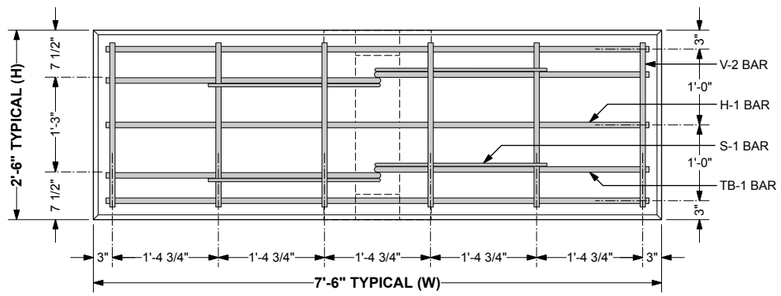

3 **FRONT VIEW - 2.5 x 7.5 x 3.75 Hlf Cnr SHOWN**
Scale: 1" = 1'-0"
(U-1 BARS IN STEM OMITTED FOR CLARITY)

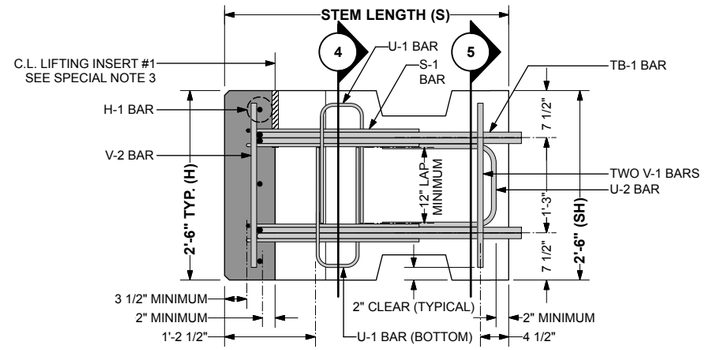

2 **SIDE VIEW - 2.5 x 7.5 x 3.75 Hlf Cnr SHOWN**
Scale: 1" = 1'-0"

2" COVER ON ALL BARS UNLESS OTHERWISE NOTED

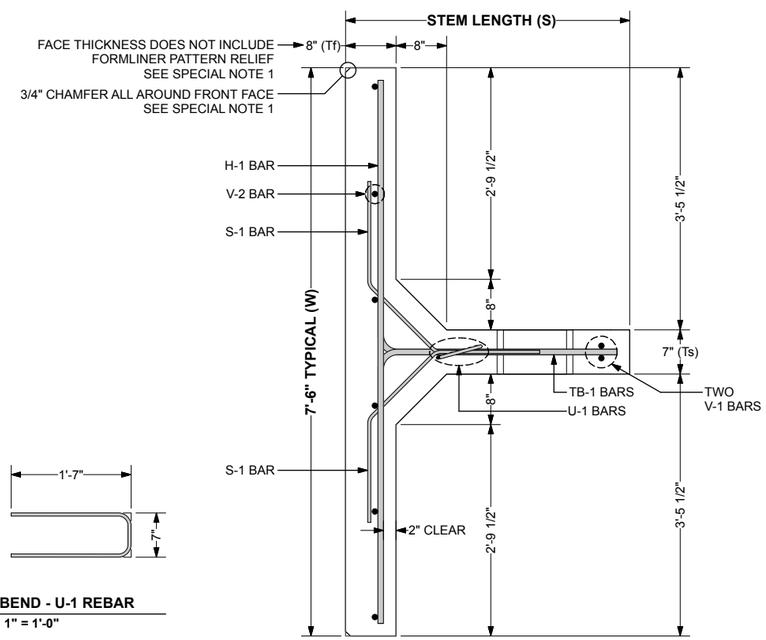

1 **PLAN VIEW - 2.5 x 7.5 x 3.75 Hlf Cnr SHOWN**
Scale: 1" = 1'-0"

SPECIAL NOTES:

1. FRONT FACE OF T-WALL® UNITS FINISH TREATMENT:
   - PER CONTRACT DRAWINGS AND SPECS.
   - MINIMUM FRONT FACE THICKNESS SHALL BE 8"
2. LIFTING INSERTS:
   - MEADOW BURKE RAPID LIFT RL-22 LIFTING INSERT WITH RL-32 REBAR OR DAYTON SUPERIOR P-53 5-TON SWIFT LIFT EYE WITH P-60 TENSION BAR.
   - 8000 LBS (4 TONS) MINIMUM RATED WORKING LOAD CAPACITY.
   - REFER TO LIFTING INSERT DATA TABLE FOR INSERT LOCATIONS.
   - LIFTING INSERTS TO BE GALVANIZED

GENERAL NOTES:

1. PRIMARY REFERENCE: AASHTO LRFD BRIDGE SPECIFICATIONS, 5th EDITION, 2010 WITH INTERIM REVISIONS
2. MINIMUM CONCRETE COVER IS DESIGNED FOR 2" ON ALL BARS. TOLERANCES PER CONSTRUCTION SPECIFICATIONS SECTION 2.0.
3. ALL MATERIAL AND TOLERANCES IN ACCORDS TO T-WALL® CONSTRUCTION SPECIFICATIONS, SECTION 2.0 MATERIALS.
4. REBAR:
   - SEE CONSTRUCTION SPECIFICATION, SECTION 2.0 MATERIALS OR PER CONTRACT DRAWINGS AND SPECS.
5. CONCRETE:
   - F'c = 5000 psi @ 28 DAYS

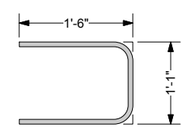

9 **BAR BEND - U-2 REBAR**
Scale: 1" = 1'-0"

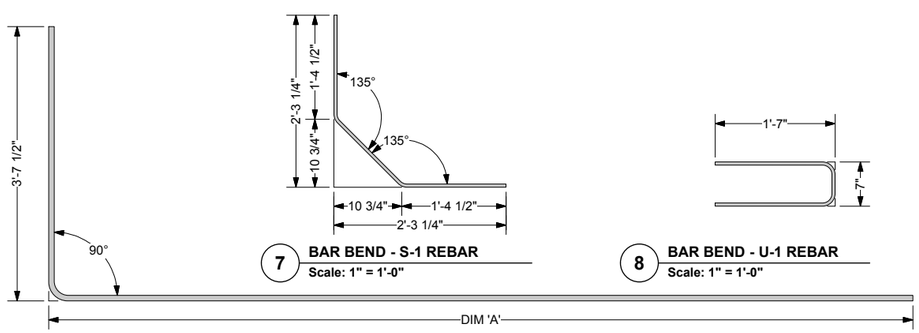

6 **BAR BEND - TB-1 REBAR**
Scale: 1" = 1'-0"

7 **BAR BEND - S-1 REBAR**
Scale: 1" = 1'-0"

8 **BAR BEND - U-1 REBAR**
Scale: 1" = 1'-0"

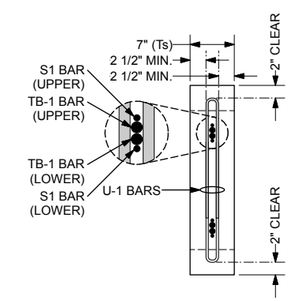

4 **SECTION THROUGH STEM**
Scale: 1" = 1'-0"

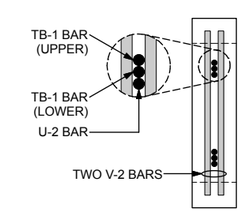

5 **SECTION THROUGH STEM**
Scale: 1" = 1'-0"

4/13/2017

DESIGNER

THE NEEL COMPANY
8328-D TRAFORD LANE
SPRINGFIELD, VA 22152
PH: (703) 913-7858
FX: (703) 913-7859
Web: www.neelco.com

This drawing contains information proprietary to The Neel Company. The Neel Company is the exclusive licensee of the T-WALL® patent. © 2017, The Neel Company

DATE:	03-23-17
SCALE:	AS NOTED
DESIGNED:	JMC
DRAWN:	CJW
CHECKED:	CCG/KD
TNC JOB #:	TW3634
TNC SHT #	52 OF 67

PA DOT DWG # 87-402 PE (REVISION IV)

COMMONWEALTH OF PENNSYLVANIA
DEPARTMENT OF TRANSPORTATION
BUREAU OF PROJECT DELIVERY

T-WALL® STANDARDS
PREFABRICATED T-WALL® RETAINING WALL SYSTEM

SHOP DRAWINGS
REBAR
HALF CORNER UNITS - 3'-9" STEM

SHEET 52 OF 67

87-402 PE

DATE: 03-23-17 TNC JOB #: TW3634 PLOT DATE AND TIME: Wednesday, March 22, 2017 15:50:06 CAD FILE NAME: 052 Rebar - RWY Hlf Cnr 3.42 r4-0.vwx

T-WALL UNIT PROPERTIES

UNIT TYPE	H	W	S	Tf*	SH	VOLUME*	WEIGHT*
2.5x7.5x4.08 Hlf Cnr	2'6"	7'6"	4'1"	8"	2'6"	0.67 cy	2,733 lbs

*** VOLUMES AND WEIGHTS ON THIS TABLE ARE BASED ON 8" FACE THICKNESS (Tf)**
FORMLINER FINISHES MAY INCREASE FACE THICKNESS, VOLUME AND WEIGHT.

LIFTING INSERT DATA

UNIT TYPE	DISTANCE TO CENTROID FROM FRONT FACE	DISTANCE TO INSERT #1 FROM FRONT FACE	DISTANCE TO INSERT #2 FROM FRONT FACE
2.5x7.5x4.08 Hlf Cnr	10 3/8"	10 3/8"	N/A

REBAR SCHEDULES

2.5x7.5x4.08 Hlf Cnr — **HIGHWAY REBAR**

Unit Dims	Bar Mark	Qnty	Size	Length	Dim "A"	Bar Weight	Remarks
H=2'6"	H-1	3 ea	#4	7'2"		14.36 lbs	
W=7'6"	U-1	2 ea	#3	3'9"		2.82 lbs	
S=4'1"	V-2	6 ea	#4	2'2"		8.68 lbs	
SH=2'6"	S-1	4 ea	#4	4'0 1/4"		10.74 lbs	
	TB-1	4 ea	#4	7'1 1/4"	3'5 3/4"	18.97 lbs	
	U-2	1 ea	#6	4'1"		6.13 lbs	
	V-1	2 ea	#4	2'2"		2.89 lbs	
						64.61 lbs	

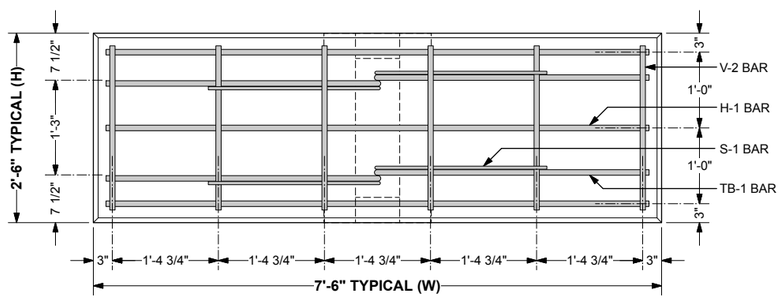

3 **FRONT VIEW - 2.5 x 7.5 x 4.08 Hlf Cnr SHOWN**
Scale: 1" = 1'-0"
(U-1 BARS IN STEM OMITTED FOR CLARITY)

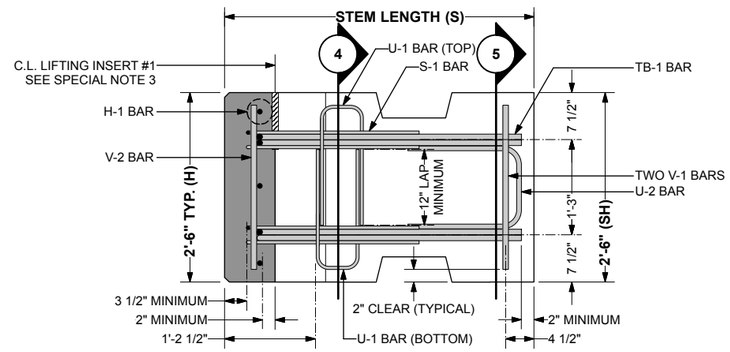

2 **SIDE VIEW - 2.5 x 7.5 x 4.08 Hlf Cnr SHOWN**
Scale: 1" = 1'-0"

2" COVER ON ALL BARS UNLESS OTHERWISE NOTED

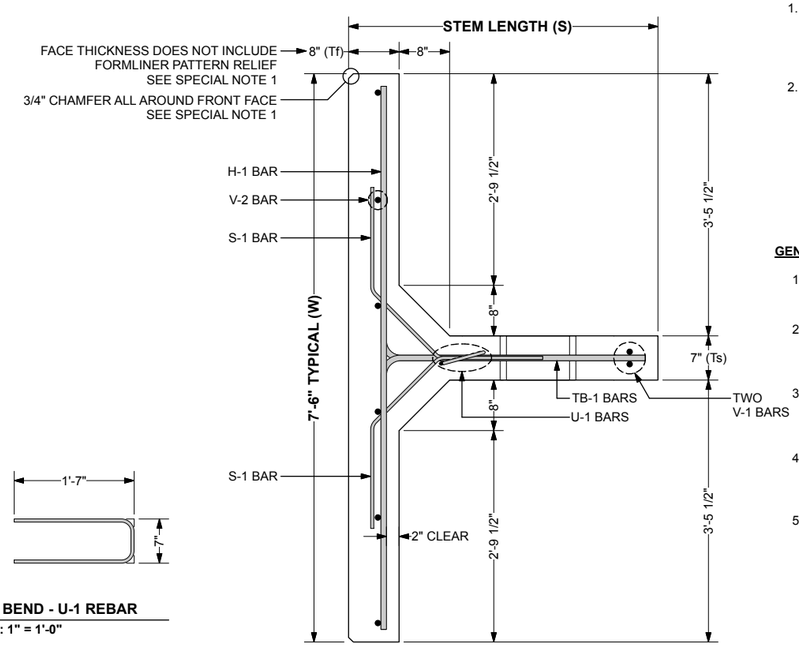

1 **PLAN VIEW - 2.5 x 7.5 x 4.08 Hlf Cnr SHOWN**
Scale: 1" = 1'-0"

SPECIAL NOTES:

1. FRONT FACE OF T-WALL® UNITS FINISH TREATMENT:
   - PER CONTRACT DRAWINGS AND SPECS.
   - MINIMUM FRONT FACE THICKNESS SHALL BE 8"
2. LIFTING INSERTS:
   - MEADOW BURKE RAPID LIFT RL-22 LIFTING INSERT WITH RL-32 REBAR OR DAYTON SUPERIOR P-53 5-TON SWIFT LIFT EYE WITH P-60 TENSION BAR.
   - 8000 LBS (4 TONS) MINIMUM RATED WORKING LOAD CAPACITY.
   - REFER TO LIFTING INSERT DATA TABLE FOR INSERT LOCATIONS.
   - LIFTING INSERTS TO BE GALVANIZED

GENERAL NOTES:

1. PRIMARY REFERENCE: AASHTO LRFD BRIDGE SPECIFICATIONS, 5th EDITION, 2010 WITH INTERIM REVISIONS
2. MINIMUM CONCRETE COVER IS DESIGNED FOR 2" ON ALL BARS. TOLERANCES PER CONSTRUCTION SPECIFICATIONS SECTION 2.0.
3. ALL MATERIAL AND TOLERANCES IN ACCORDS TO T-WALL® CONSTRUCTION SPECIFICATIONS, SECTION 2.0 MATERIALS.
4. REBAR:
   - SEE CONSTRUCTION SPECIFICATION, SECTION 2.0 MATERIALS OR PER CONTRACT DRAWINGS AND SPECS.
5. CONCRETE:
   - F'c = 5000 psi @ 28 DAYS

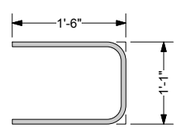

9 **BAR BEND - U-2 REBAR**
Scale: 1" = 1'-0"

7 **BAR BEND - S-1 REBAR**
Scale: 1" = 1'-0"

8 **BAR BEND - U-1 REBAR**
Scale: 1" = 1'-0"

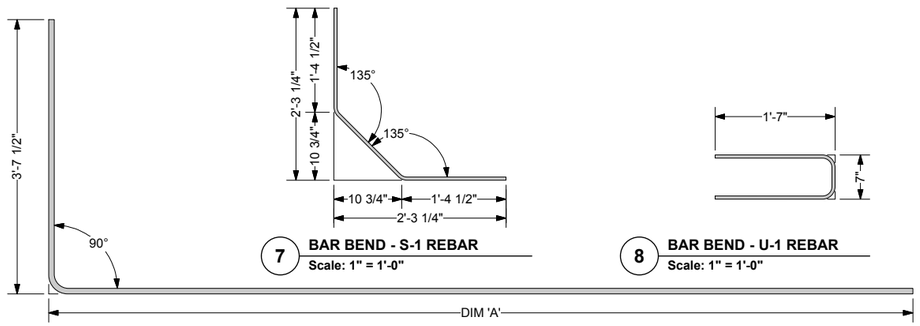

6 **BAR BEND - TB-1 REBAR**
Scale: 1" = 1'-0"

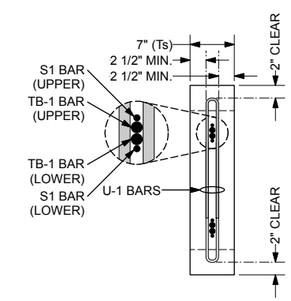

4 **SECTION THROUGH STEM**
Scale: 1" = 1'-0"

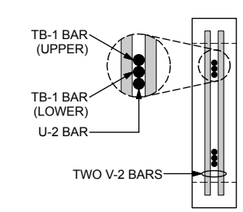

5 **SECTION THROUGH STEM**
Scale: 1" = 1'-0"

PA DOT DWG # 87-402 PE (REVISION IV)

COMMONWEALTH OF PENNSYLVANIA
DEPARTMENT OF TRANSPORTATION
BUREAU OF PROJECT DELIVERY

T-WALL® STANDARDS
PREFABRICATED T-WALL® RETAINING WALL SYSTEM

SHOP DRAWINGS
REBAR
HALF CORNER UNITS - 4'-1" STEM

4/13/2017

DESIGNER

THE NEEL COMPANY
8328-D TRAFORD LANE
SPRINGFIELD, VA 22152
PH: (703) 913-7858
FX: (703) 913-7859
Web: www.neelco.com

This drawing contains information proprietary to The Neel Company. The Neel Company is the exclusive licensee of the T-WALL® patent. © 2017, The Neel Company

DATE:	03-23-17
SCALE:	NO SCALE
DESIGNED:	JMC
DRAWN:	CJW
CHECKED:	CCG/KD
TNC JOB #:	TW3634
TNC SHT #:	53 OF 67

SHEET 53 OF 67

87-402 PE

DATE: 03-23-17 TNC JOB #: TW3634 PLOT DATE AND TIME: Wednesday, March 22, 2017 15:49:58 CAD FILE NAME: 053 Rebar - RWY Hlf Cnr 4.08 r4-0.vwx

2" COVER ON ALL BARS UNLESS OTHERWISE NOTED

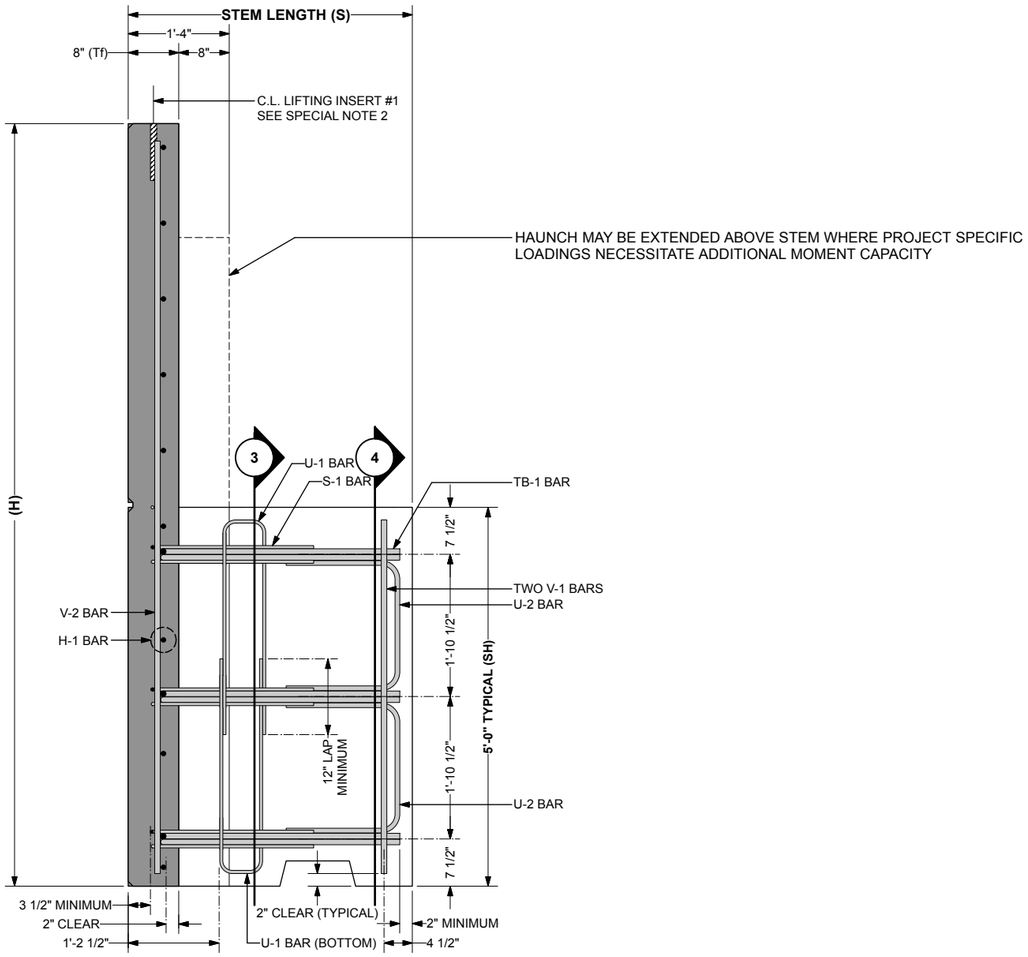

1 **SIDE VIEW - STANDARD TOP UNIT (10.0 x 7.5 x 3.75 Std Top Cnr SHOWN)**
Scale: 1" = 1'-0"

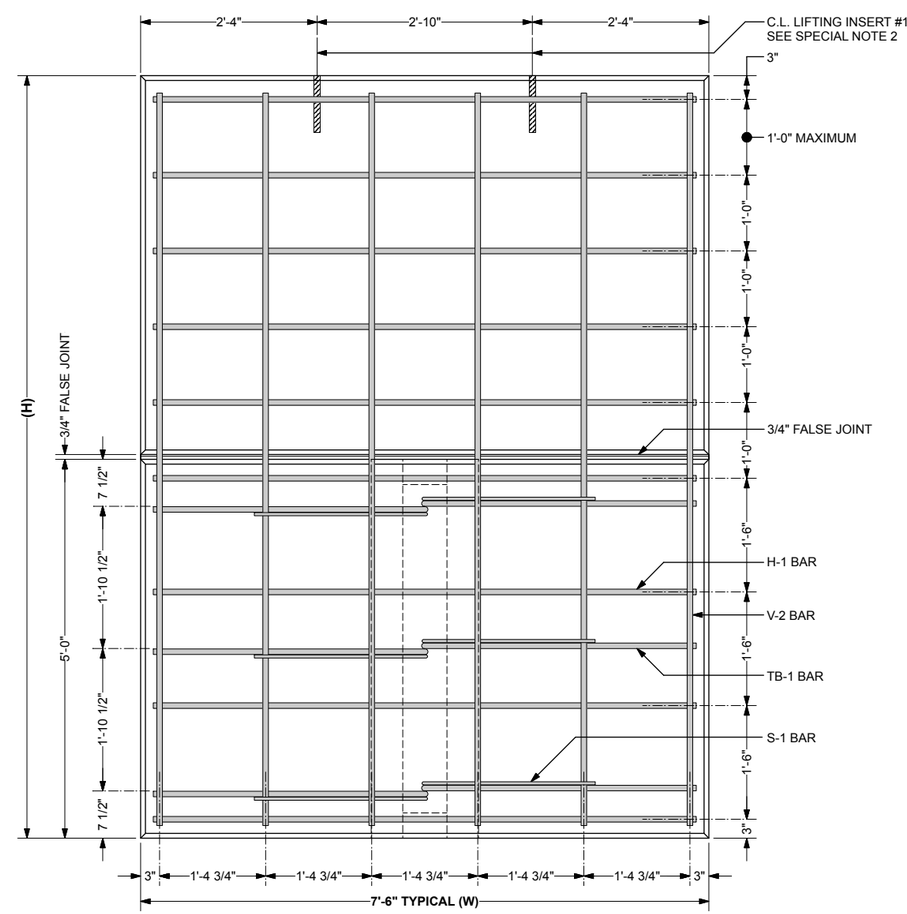

2 **FRONT VIEW - STANDARD TOP UNIT (10.0 x 7.5 x 3.75 Std Top Cnr SHOWN)**
Scale: 1" = 1'-0"
(U-1 BARS IN STEM OMITTED FOR CLARITY)

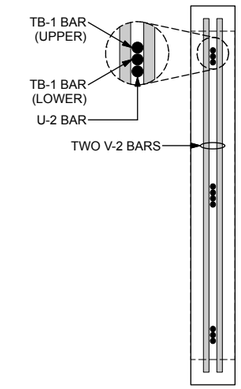

4 **SECTION THROUGH STEM**
Scale: 1" = 1'-0"

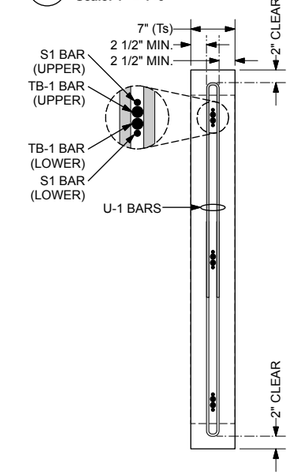

3 **SECTION THROUGH STEM**
Scale: 1" = 1'-0"

PA DOT DWG # 87-402 PE (REVISION IV)

COMMONWEALTH OF PENNSYLVANIA
DEPARTMENT OF TRANSPORTATION
BUREAU OF PROJECT DELIVERY

T-WALL® STANDARDS
PREFABRICATED T-WALL® RETAINING WALL SYSTEM

SHOP DRAWINGS
REBAR
7.50' WIDE STANDARD TOP CORNER UNITS - 3'-9" STEM (I)

4/13/2017

DESIGNER

THE NEEL COMPANY
8328-D TRAFORD LANE
SPRINGFIELD, VA 22152
PH: (703) 913-7858
FX: (703) 913-7859
Web: www.neelco.com

This drawing contains information proprietary to The Neel Company. The Neel Company is the exclusive licensee of the T-WALL® patent. © 2017, The Neel Company

DATE:	03-23-17
SCALE:	AS NOTED
DESIGNED:	JMC
DRAWN:	CJW
CHECKED:	CCG/KD
TNC JOB #:	TW3634
TNC SHT #54 OF 67	

SHEET 54 OF 67

87-402 PE

DATE: 03-23-17 TNC JOB #: TW3634 PLOT DATE AND TIME: Wednesday, March 22, 2017 15:51:41 CAD FILE NAME: 054 Rebar - RWY Std Top Cnr 3.42 r4-0.vwx

SPECIAL NOTES:

1. FRONT FACE OF T-WALL® UNITS FINISH TREATMENT:
   - PER CONTRACT DRAWINGS AND SPECS.
   - MINIMUM FRONT FACE THICKNESS SHALL BE 8"
2. LIFTING INSERTS:
   - MEADOW BURKE RAPID LIFT RL-22 LIFTING INSERT WITH RL-32 REBAR OR DAYTON SUPERIOR P-53 5-TON SWIFT LIFT EYE WITH P-60 TENSION BAR.
   - 8000 LBS (4 TONS) MINIMUM RATED WORKING LOAD CAPACITY.
   - REFER TO LIFTING INSERT DATA TABLE FOR INSERT LOCATIONS.
   - LIFTING INSERTS TO BE GALVANIZED.

GENERAL NOTES:

1. PRIMARY REFERENCE: AASHTO LRFD BRIDGE SPECIFICATIONS, 5th EDITION, 2010 WITH INTERIM REVISIONS
2. MINIMUM CONCRETE COVER IS DESIGNED FOR 2" ON ALL BARS. TOLERANCES PER CONSTRUCTION SPECIFICATIONS SECTION 2.0.
3. ALL MATERIAL AND TOLERANCES IN ACCORDS TO T-WALL® CONSTRUCTION SPECIFICATIONS, SECTION 2.0 MATERIALS.
4. REBAR:
   - SEE CONSTRUCTION SPECIFICATION, SECTION 2.0 MATERIALS OR PER CONTRACT DRAWINGS AND SPECS.
5. CONCRETE:
   - F'c = 5000 psi @ 28 DAYS

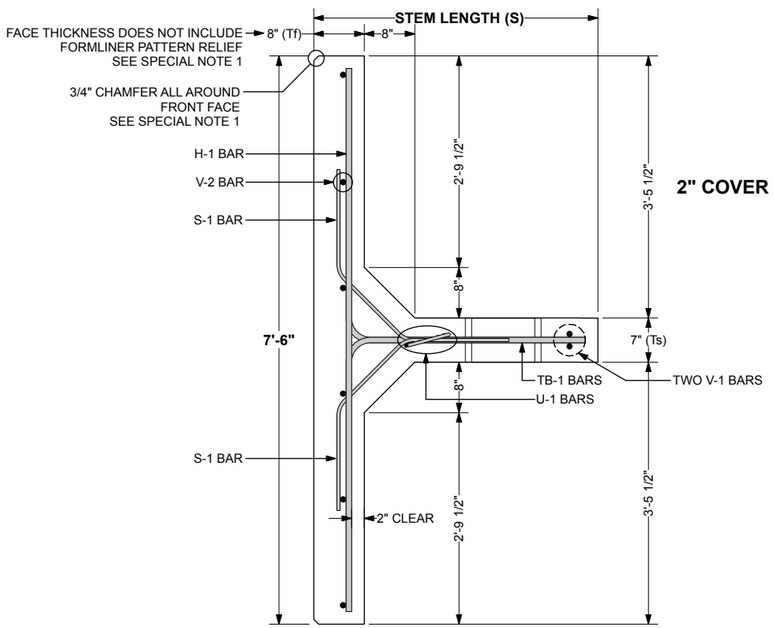

2" COVER ON ALL BARS UNLESS OTHERWISE NOTED

5 PLAN VIEW AT STEM - STANDARD TOP UNIT (3'-9" STEM SHOWN)
Scale: 1" = 1'-0"

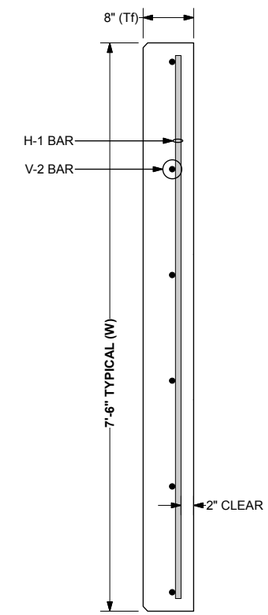

6 PLAN VIEW - EXTENDED FACE PANEL
Scale: 1" = 1'-0"

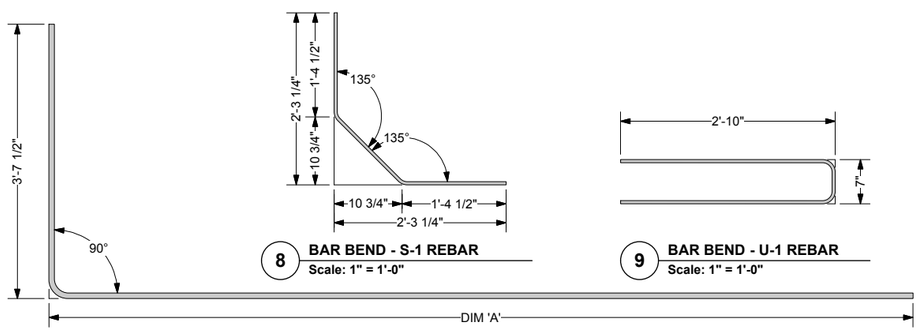

7 BAR BEND - TB-1 REBAR
Scale: 1" = 1'-0"

8 BAR BEND - S-1 REBAR
Scale: 1" = 1'-0"

9 BAR BEND - U-1 REBAR
Scale: 1" = 1'-0"

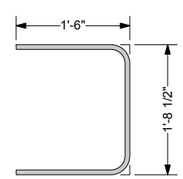

10 BAR BEND - U-2 REBAR
Scale: 1" = 1'-0"

4/13/2017

DESIGNER

THE NEEL COMPANY
8328-D TRAFORD LANE
SPRINGFIELD, VA 22152
PH: (703) 913-7858
FX: (703) 913-7859
Web: www.neelco.com

This drawing contains information proprietary to The Neel Company. The Neel Company is the exclusive licensee of the T-WALL® patent. © 2017, The Neel Company

DATE:	03-23-17
SCALE:	AS NOTED
DESIGNED:	JMC
DRAWN:	CJW
CHECKED:	CCG/KD
TNC JOB #:	TW3634
TNC SHT #55 OF 67	

PA DOT DWG # 87-402 PE (REVISION IV)

COMMONWEALTH OF PENNSYLVANIA
DEPARTMENT OF TRANSPORTATION
BUREAU OF PROJECT DELIVERY

T-WALL® STANDARDS
PREFABRICATED T-WALL® RETAINING WALL SYSTEM

SHOP DRAWINGS
REBAR
7.50' WIDE STANDARD TOP CORNER UNITS - 3'-9" STEM (II)

SHEET 55 OF 67

87-402 PE

DATE: 03-23-17 TNC JOB #: TW3634 PLOT DATE AND TIME: Wednesday, March 22, 2017 15:51:41 CAD FILE NAME: 054 Rebar - RWY Std Top Cnr 3.42 r4-0.vwx

T-WALL UNIT PROPERTIES

UNIT TYPE	H	W	S	Tf*	SH	VOLUME*	WEIGHT*
5.5x7.5x3.75 Std Top Cnr	5'6"	7'6"	3'9"	8"	5'0"	1.42 cy	5,761 lbs
6.0x7.5x3.75 Std Top Cnr	6'0"	7'6"	3'9"	8"	5'0"	1.52 cy	6,136 lbs
6.5x7.5x3.75 Std Top Cnr	6'6"	7'6"	3'9"	8"	5'0"	1.61 cy	6,511 lbs
7.0x7.5x3.75 Std Top Cnr	7'0"	7'6"	3'9"	8"	5'0"	1.70 cy	6,886 lbs
7.5x7.5x3.75 Std Top Cnr	7'6"	7'6"	3'9"	8"	5'0"	1.79 cy	7,261 lbs
8.0x7.5x3.75 Std Top Cnr	8'0"	7'6"	3'9"	8"	5'0"	1.89 cy	7,636 lbs
8.5x7.5x3.75 Std Top Cnr	8'6"	7'6"	3'9"	8"	5'0"	1.98 cy	8,011 lbs
9.0x7.5x3.75 Std Top Cnr	9'0"	7'6"	3'9"	8"	5'0"	2.07 cy	8,386 lbs
9.5x7.5x3.75 Std Top Cnr	9'6"	7'6"	3'9"	8"	5'0"	2.16 cy	8,761 lbs
10.0x7.5x3.75 Std Top Cnr	10'0"	7'6"	3'9"	8"	5'0"	2.26 cy	9,136 lbs

*** VOLUMES AND WEIGHTS ON THIS TABLE ARE BASED ON 8" FACE THICKNESS (Tf)**
FORMLINER FINISHES MAY INCREASE FACE THICKNESS, VOLUME AND WEIGHT.

LIFTING INSERT DATA

UNIT TYPE	DISTANCE TO CENTROID FROM FRONT FACE	DISTANCE TO INSERT #1 FROM FRONT FACE	DISTANCE TO INSERT #2 FROM FRONT FACE
5.5x7.5x3.75 Std Top Cnr	9 3/8"	4"	N/A
6.0x7.5x3.75 Std Top Cnr	9"	4"	N/A
6.5x7.5x3.75 Std Top Cnr	8 3/4"	4"	N/A
7.0x7.5x3.75 Std Top Cnr	8 1/2"	4"	N/A
7.5x7.5x3.75 Std Top Cnr	8 3/8"	4"	N/A
8.0x7.5x3.75 Std Top Cnr	8 1/8"	4"	N/A
8.5x7.5x3.75 Std Top Cnr	8"	4"	N/A
9.0x7.5x3.75 Std Top Cnr	7 7/8"	4"	N/A
9.5x7.5x3.75 Std Top Cnr	7 3/4"	4"	N/A
10.0x7.5x3.75 Std Top Cnr	7 5/8"	4"	N/A

REBAR SCHEDULES

5.5x7.5x3.75 Std Top Cnr — **HIGHWAY REBAR**

Unit Dims	Bar Mark	Qnty	Size	Length	Dim "A"	Bar Weight	Remarks
H=5'6"	H-1	5 ea	#4	7'2"		23.94 lbs	
W=7'6"	U-1	2 ea	#3	6'3"		4.70 lbs	
S=3'9"	V-2	6 ea	#5	5'2"		32.33 lbs	
SH=5'0"	S-1	6 ea	#4	4'0 1/4"		16.12 lbs	
	TB-1	6 ea	#4	6'9 1/4"	3'1 3/4"	27.14 lbs	
	U-2	2 ea	#6	4'8 1/2"		14.14 lbs	
	V-1	2 ea	#4	4'8"		6.23 lbs	
						124.60 lbs	

6.0x7.5x3.75 Std Top Cnr — **HIGHWAY REBAR**

Unit Dims	Bar Mark	Qnty	Size	Length	Dim "A"	Bar Weight	Remarks
H=6'0"	H-1	5 ea	#4	7'2"		23.94 lbs	
W=7'6"	U-1	2 ea	#3	6'3"		4.70 lbs	
S=3'9"	V-2	6 ea	#5	5'8"		35.46 lbs	
SH=5'0"	S-1	6 ea	#4	4'0 1/4"		16.12 lbs	
	TB-1	6 ea	#4	6'9 1/4"	3'1 3/4"	27.14 lbs	
	U-2	2 ea	#6	4'8 1/2"		14.14 lbs	
	V-1	2 ea	#4	4'8"		6.23 lbs	
						127.73 lbs	

6.5x7.5x3.75 Std Top Cnr — **HIGHWAY REBAR**

Unit Dims	Bar Mark	Qnty	Size	Length	Dim "A"	Bar Weight	Remarks
H=6'6"	H-1	6 ea	#4	7'2"		28.72 lbs	
W=7'6"	U-1	2 ea	#3	6'3"		4.70 lbs	
S=3'9"	V-2	6 ea	#5	6'2"		38.59 lbs	
SH=5'0"	S-1	6 ea	#4	4'0 1/4"		16.12 lbs	
	TB-1	6 ea	#4	6'9 1/4"	3'1 3/4"	27.14 lbs	
	U-2	2 ea	#6	4'8 1/2"		14.14 lbs	
	V-1	2 ea	#4	4'8"		6.23 lbs	
						135.65 lbs	

7.0x7.5x3.75 Std Top Cnr — **HIGHWAY REBAR**

Unit Dims	Bar Mark	Qnty	Size	Length	Dim "A"	Bar Weight	Remarks
H=7'0"	H-1	6 ea	#4	7'2"		28.72 lbs	
W=7'6"	U-1	2 ea	#3	6'3"		4.70 lbs	
S=3'9"	V-2	6 ea	#5	6'8"		41.72 lbs	
SH=5'0"	S-1	6 ea	#4	4'0 1/4"		16.12 lbs	
	TB-1	6 ea	#4	6'9 1/4"	3'1 3/4"	27.14 lbs	
	U-2	2 ea	#6	4'8 1/2"		14.14 lbs	
	V-1	2 ea	#4	4'8"		6.23 lbs	
						138.78 lbs	

7.5x7.5x3.75 Std Top Cnr — **HIGHWAY REBAR**

Unit Dims	Bar Mark	Qnty	Size	Length	Dim "A"	Bar Weight	Remarks
H=7'6"	H-1	7 ea	#4	7'2"		33.51 lbs	
W=7'6"	U-1	2 ea	#3	6'3"		4.70 lbs	
S=3'9"	V-2	6 ea	#5	7'2"		44.85 lbs	
SH=5'0"	S-1	6 ea	#4	4'0 1/4"		16.12 lbs	
	TB-1	6 ea	#4	6'9 1/4"	3'1 3/4"	27.14 lbs	
	U-2	2 ea	#6	4'8 1/2"		14.14 lbs	
	V-1	2 ea	#4	4'8"		6.23 lbs	
						146.69 lbs	

REBAR SCHEDULES

8.0x7.5x3.75 Std Top Cnr — **HIGHWAY REBAR**

Unit Dims	Bar Mark	Qnty	Size	Length	Dim "A"	Bar Weight	Remarks
H=8'0"	H-1	7 ea	#4	7'2"		33.51 lbs	
W=7'6"	U-1	2 ea	#3	6'3"		4.70 lbs	
S=3'9"	V-2	6 ea	#5	7'8"		47.98 lbs	
SH=5'0"	S-1	6 ea	#4	4'0 1/4"		16.12 lbs	
	TB-1	6 ea	#4	6'9 1/4"	3'1 3/4"	27.14 lbs	
	U-2	2 ea	#6	4'8 1/2"		14.14 lbs	
	V-1	2 ea	#4	4'8"		6.23 lbs	
						149.82 lbs	

8.5x7.5x3.75 Std Top Cnr — **HIGHWAY REBAR**

Unit Dims	Bar Mark	Qnty	Size	Length	Dim "A"	Bar Weight	Remarks
H=8'6"	H-1	8 ea	#4	7'2"		38.30 lbs	
W=7'6"	U-1	2 ea	#3	6'3"		4.70 lbs	
S=3'9"	V-2	6 ea	#5	8'2"		51.11 lbs	
SH=5'0"	S-1	6 ea	#4	4'0 1/4"		16.12 lbs	
	TB-1	6 ea	#5	6'9 1/4"	3'1 3/4"	42.37 lbs	
	U-2	2 ea	#6	4'8 1/2"		14.14 lbs	
	V-1	2 ea	#4	4'8"		6.23 lbs	
						172.97 lbs	

9.0x7.5x3.75 Std Top Cnr — **HIGHWAY REBAR**

Unit Dims	Bar Mark	Qnty	Size	Length	Dim "A"	Bar Weight	Remarks
H=9'0"	H-1	8 ea	#4	7'2"		38.30 lbs	
W=7'6"	U-1	2 ea	#3	6'3"		4.70 lbs	
S=3'9"	V-2	6 ea	#6	8'8"		78.10 lbs	
SH=5'0"	S-1	6 ea	#4	4'0 1/4"		16.12 lbs	
	TB-1	6 ea	#6	6'9 1/4"	3'1 3/4"	61.02 lbs	
	U-2	2 ea	#6	4'8 1/2"		14.14 lbs	
	V-1	2 ea	#4	4'8"		6.23 lbs	
						218.62 lbs	

9.5x7.5x3.75 Std Top Cnr — **HIGHWAY REBAR**

Unit Dims	Bar Mark	Qnty	Size	Length	Dim "A"	Bar Weight	Remarks
H=9'6"	H-1	9 ea	#4	7'2"		43.09 lbs	
W=7'6"	U-1	2 ea	#3	6'3"		4.70 lbs	
S=3'9"	V-2	6 ea	#6	9'2"		82.61 lbs	
SH=5'0"	S-1	6 ea	#4	4'0 1/4"		16.12 lbs	
	TB-1	6 ea	#6	6'9 1/4"	3'1 3/4"	61.02 lbs	
	U-2	2 ea	#6	4'8 1/2"		14.14 lbs	
	V-1	2 ea	#4	4'8"		6.23 lbs	
						227.91 lbs	

10.0x7.5x3.75 Std Top Cnr — **HIGHWAY REBAR**

Unit Dims	Bar Mark	Qnty	Size	Length	Dim "A"	Bar Weight	Remarks
H=10'0"	H-1	9 ea	#4	7'2"		43.09 lbs	
W=7'6"	U-1	2 ea	#3	6'3"		4.70 lbs	
S=3'9"	V-2	6 ea	#7	9'8"		118.55 lbs	
SH=5'0"	S-1	6 ea	#4	4'0 1/4"		16.12 lbs	
	TB-1	6 ea	#6	6'9 1/4"	3'1 3/4"	61.02 lbs	
	U-2	2 ea	#6	4'8 1/2"		14.14 lbs	
	V-1	2 ea	#4	4'8"		6.23 lbs	
						263.85 lbs	

4/13/2017

DESIGNER

THE NEEL COMPANY
8328-D TRAFORD LANE
SPRINGFIELD, VA 22152
PH: (703) 913-7858
FX: (703) 913-7859
Web: www.neelco.com

This drawing contains information proprietary to The Neel Company. The Neel Company is the exclusive licensee of the T-WALL® patent. © 2017, The Neel Company

DATE: 03-23-17
SCALE: NO SCALE
DESIGNED: JMC
DRAWN: CJW
CHECKED: CCG/KD
TNC JOB #: TW3634
TNC SHT #56 OF 67

PA DOT DWG # 87-402 PE (REVISION IV)

COMMONWEALTH OF PENNSYLVANIA
DEPARTMENT OF TRANSPORTATION
BUREAU OF PROJECT DELIVERY

T-WALL® STANDARDS
PREFABRICATED T-WALL® RETAINING WALL SYSTEM

SHOP DRAWINGS
REBAR
7.50' WIDE STANDARD TOP CORNER UNITS - 3'-9" STEM (III)

DATE: 03-23-17 TNC JOB #: TW3634 PLOT DATE AND TIME: Wednesday, March 22, 2017 15:51:41 CAD FILE NAME: 054 Rebar - RWY Std Top Cnr 3.42 r4-0.vwx

2" COVER ON ALL BARS UNLESS OTHERWISE NOTED

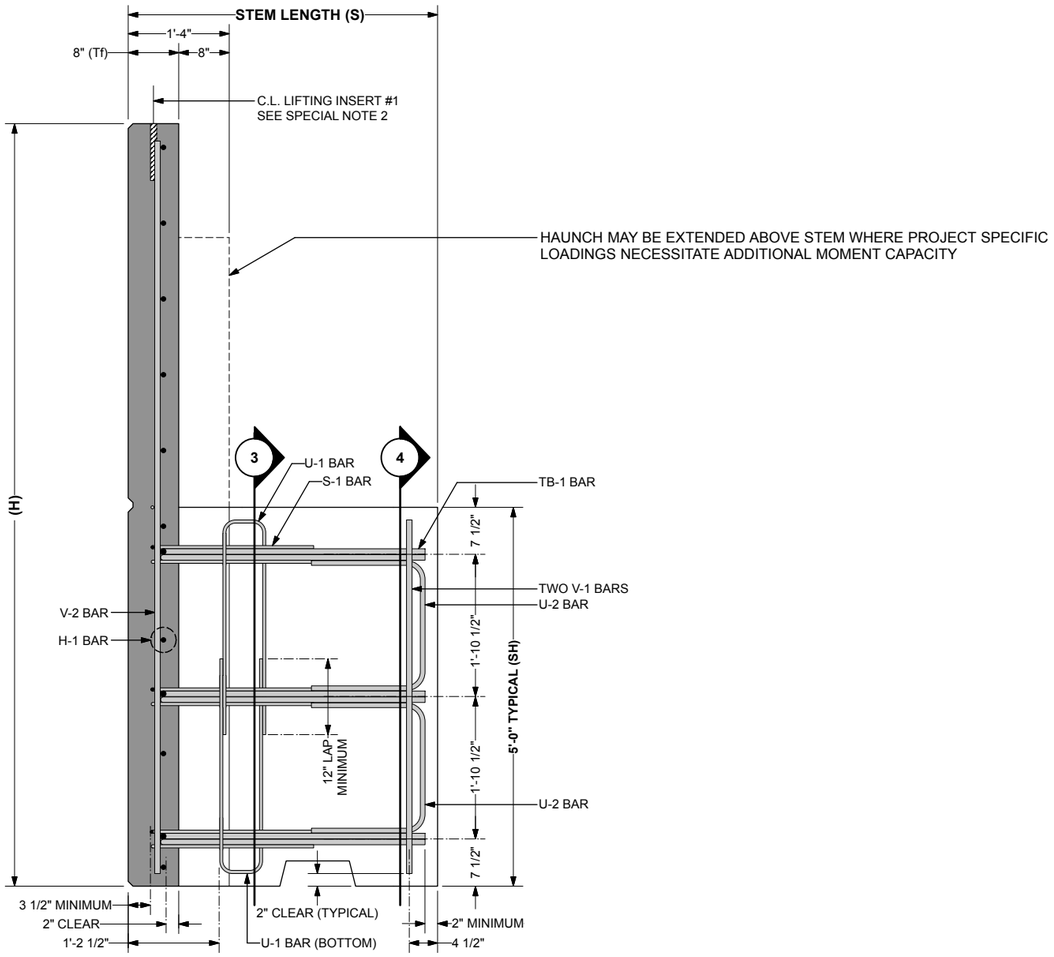

1 **SIDE VIEW - STANDARD TOP UNIT (10.0 x 7.5 x 4.08 Std Top Cnr SHOWN)**
Scale: 1" = 1'-0"

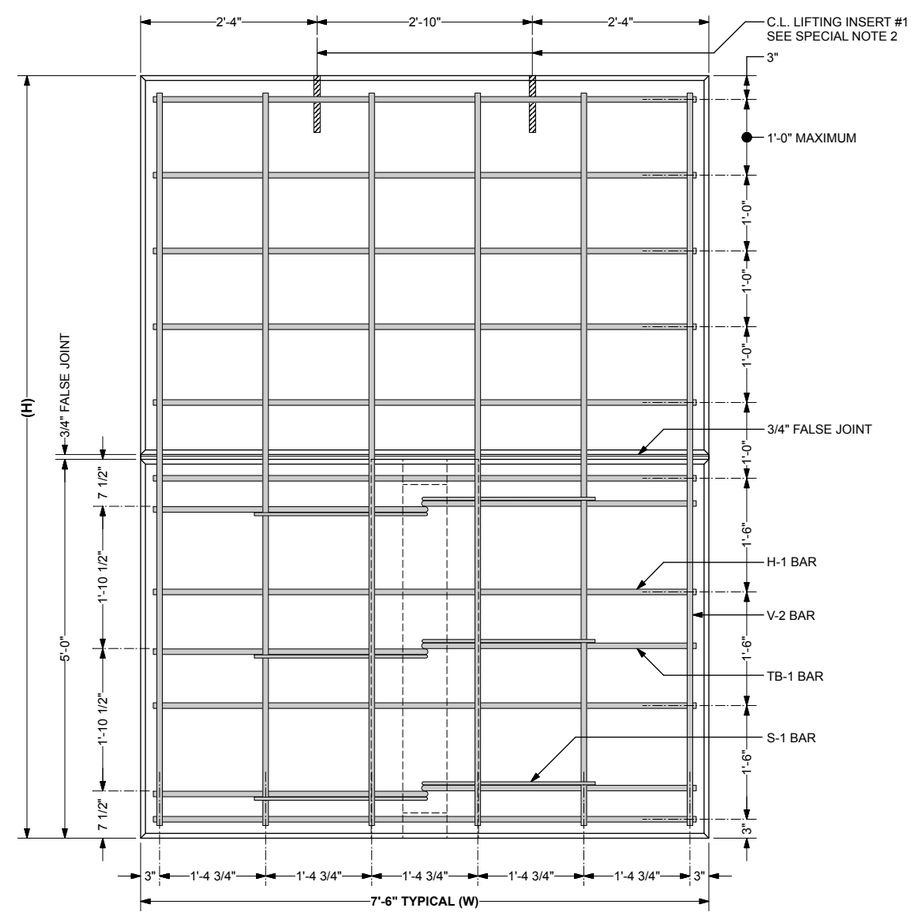

2 **FRONT VIEW - STANDARD TOP UNIT (10.0 x 7.5 x 4.08 Std Top Cnr SHOWN)**
Scale: 1" = 1'-0"
(U-1 BARS IN STEM OMITTED FOR CLARITY)

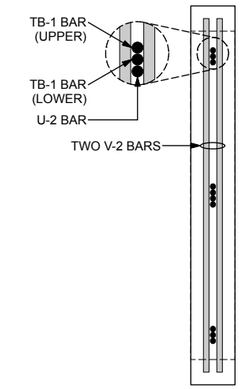

4 **SECTION THROUGH STEM**
Scale: 1" = 1'-0"

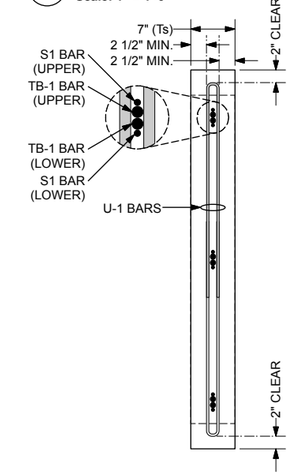

3 **SECTION THROUGH STEM**
Scale: 1" = 1'-0"

PA DOT DWG # 87-402 PE (REVISION IV)

COMMONWEALTH OF PENNSYLVANIA
DEPARTMENT OF TRANSPORTATION
BUREAU OF PROJECT DELIVERY

T-WALL® STANDARDS
PREFABRICATED T-WALL® RETAINING WALL SYSTEM

SHOP DRAWINGS
REBAR
7.50' WIDE STANDARD TOP CORNER UNITS - 4'-1" STEM (I)

4/13/2017

DESIGNER

THE NEEL COMPANY
8328-D TRAFORD LANE
SPRINGFIELD, VA 22152
PH: (703) 913-7858
FX: (703) 913-7859
Web: www.neelco.com

This drawing contains information proprietary to The Neel Company. The Neel Company is the exclusive licensee of the T-WALL® patent. © 2017, The Neel Company

DATE:	03-23-17
SCALE:	AS NOTED
DESIGNED:	JMC
DRAWN:	CJW
CHECKED:	CCG/KD
TNC JOB #:	TW3634
TNC SHT #57 OF 67	

SHEET 57 OF 67

87-402 PE

DATE: 03-23-17 TNC JOB #: TW3634 PLOT DATE AND TIME: Wednesday, March 22, 2017 15:51:34 CAD FILE NAME: 057 Rebar - RWY Std Top Cnr 4.08 r4-0.vwx

SPECIAL NOTES:

1. FRONT FACE OF T-WALL® UNITS FINISH TREATMENT:
   - PER CONTRACT DRAWINGS AND SPECS.
   - MINIMUM FRONT FACE THICKNESS SHALL BE 8"
2. LIFTING INSERTS:
   - MEADOW BURKE RAPID LIFT RL-22 LIFTING INSERT WITH RL-32 REBAR OR DAYTON SUPERIOR P-53 5-TON SWIFT LIFT EYE WITH P-60 TENSION BAR.
   - 8000 LBS (4 TONS) MINIMUM RATED WORKING LOAD CAPACITY.
   - REFER TO LIFTING INSERT DATA TABLE FOR INSERT LOCATIONS.
   - LIFTING INSERTS TO BE GALVANIZED.

GENERAL NOTES:

1. PRIMARY REFERENCE: AASHTO LRFD BRIDGE SPECIFICATIONS, 5th EDITION, 2010 WITH INTERIM REVISIONS
2. MINIMUM CONCRETE COVER IS DESIGNED FOR 2" ON ALL BARS. TOLERANCES PER CONSTRUCTION SPECIFICATIONS SECTION 2.0.
3. ALL MATERIAL AND TOLERANCES IN ACCORDS TO T-WALL® CONSTRUCTION SPECIFICATIONS, SECTION 2.0 MATERIALS.
4. REBAR:
   - SEE CONSTRUCTION SPECIFICATION, SECTION 2.0 MATERIALS OR PER CONTRACT DRAWINGS AND SPECS.
5. CONCRETE:
   - F'c = 5000 psi @ 28 DAYS

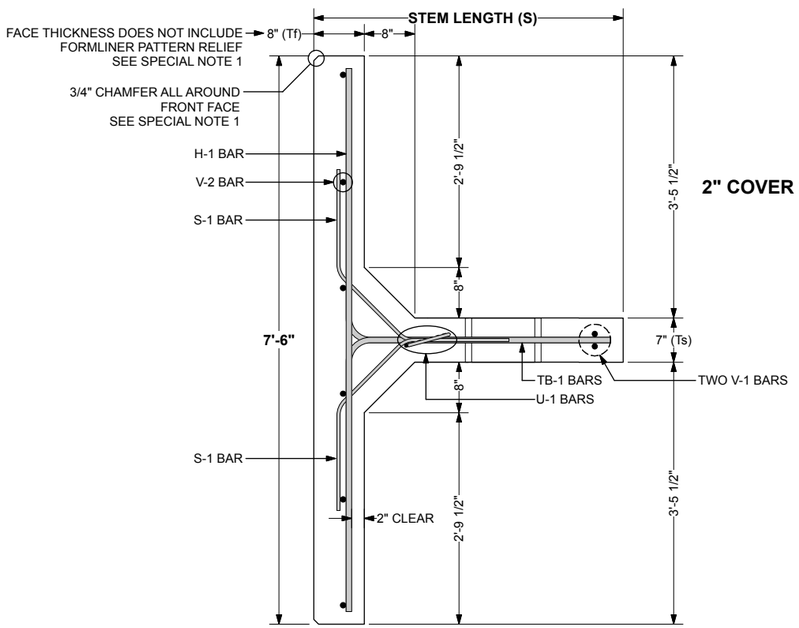

2" COVER ON ALL BARS UNLESS OTHERWISE NOTED

5 PLAN VIEW AT STEM - STANDARD TOP UNIT (4'-1" STEM SHOWN)
Scale: 1" = 1'-0"

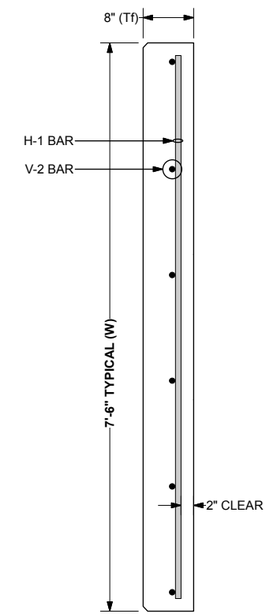

6 PLAN VIEW - EXTENDED FACE PANEL
Scale: 1" = 1'-0"

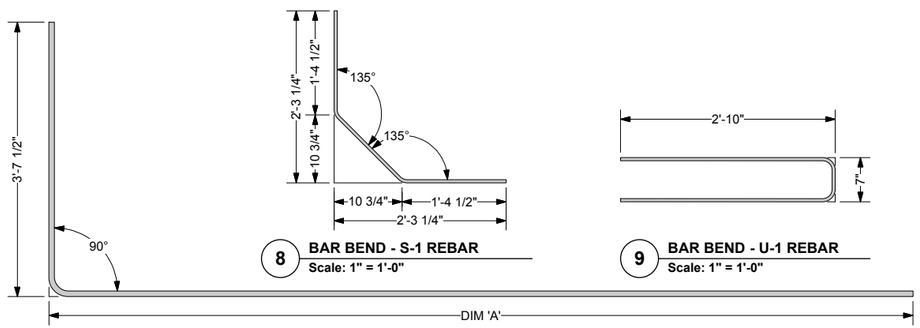

7 BAR BEND - TB-1 REBAR
Scale: 1" = 1'-0"

8 BAR BEND - S-1 REBAR
Scale: 1" = 1'-0"

9 BAR BEND - U-1 REBAR
Scale: 1" = 1'-0"

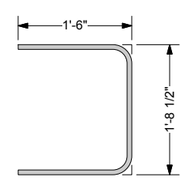

10 BAR BEND - U-2 REBAR
Scale: 1" = 1'-0"

4/13/2017

DESIGNER

THE NEEL COMPANY
8328-D TRAFORD LANE
SPRINGFIELD, VA 22152
PH: (703) 913-7858
FX: (703) 913-7859
Web: www.neelco.com

This drawing contains information proprietary to The Neel Company. The Neel Company is the exclusive licensee of the T-WALL® patent. © 2017, The Neel Company

DATE:	03-23-17
SCALE:	AS NOTED
DESIGNED:	JMC
DRAWN:	CJW
CHECKED:	CCG/KD
TNC JOB #:	TW3634
TNC SHT #58 OF 67	

PA DOT DWG # 87-402 PE (REVISION IV)

COMMONWEALTH OF PENNSYLVANIA
DEPARTMENT OF TRANSPORTATION
BUREAU OF PROJECT DELIVERY

T-WALL® STANDARDS
PREFABRICATED T-WALL® RETAINING WALL SYSTEM

SHOP DRAWINGS
REBAR
7.50' WIDE STANDARD TOP CORNER UNITS - 4'-1" STEM (II)

SHEET 58 OF 67

87-402 PE

DATE: 03-23-17 TNC JOB #: TW3634 PLOT DATE AND TIME: Wednesday, March 22, 2017 15:51:34 CAD FILE NAME: 057 Rebar - RWY Std Top Cnr 4.08 r4-0.vwx

T-WALL UNIT PROPERTIES

UNIT TYPE	H	W	S	Tf*	SH	VOLUME*	WEIGHT*
5.5x7.5x4.08 Std Top Cnr	5'6"	7'6"	4'1"	8"	5'0"	1.46 cy	5,896 lbs
6.0x7.5x4.08 Std Top Cnr	6'0"	7'6"	4'1"	8"	5'0"	1.55 cy	6,271 lbs
6.5x7.5x4.08 Std Top Cnr	6'6"	7'6"	4'1"	8"	5'0"	1.64 cy	6,646 lbs
7.0x7.5x4.08 Std Top Cnr	7'0"	7'6"	4'1"	8"	5'0"	1.73 cy	7,021 lbs
7.5x7.5x4.08 Std Top Cnr	7'6"	7'6"	4'1"	8"	5'0"	1.83 cy	7,396 lbs
8.0x7.5x4.08 Std Top Cnr	8'0"	7'6"	4'1"	8"	5'0"	1.92 cy	7,771 lbs
8.5x7.5x4.08 Std Top Cnr	8'6"	7'6"	4'1"	8"	5'0"	2.01 cy	8,146 lbs
9.0x7.5x4.08 Std Top Cnr	9'0"	7'6"	4'1"	8"	5'0"	2.10 cy	8,521 lbs
9.5x7.5x4.08 Std Top Cnr	9'6"	7'6"	4'1"	8"	5'0"	2.20 cy	8,896 lbs
10.0x7.5x4.08 Std Top Cnr	10'0"	7'6"	4'1"	8"	5'0"	2.29 cy	9,271 lbs

*** VOLUMES AND WEIGHTS ON THIS TABLE ARE BASED ON 8" FACE THICKNESS (Tf)**
FORMLINER FINISHES MAY INCREASE FACE THICKNESS, VOLUME AND WEIGHT.

LIFTING INSERT DATA

UNIT TYPE	DISTANCE TO CENTROID FROM FRONT FACE	DISTANCE TO INSERT #1 FROM FRONT FACE	DISTANCE TO INSERT #2 FROM FRONT FACE
5.5x7.5x4.08 Std Top Cnr	10 1/4"	4"	N/A
6.0x7.5x4.08 Std Top Cnr	9 7/8"	4"	N/A
6.5x7.5x4.08 Std Top Cnr	9 1/2"	4"	N/A
7.0x7.5x4.08 Std Top Cnr	9 1/4"	4"	N/A
7.5x7.5x4.08 Std Top Cnr	9"	4"	N/A
8.0x7.5x4.08 Std Top Cnr	8 3/4"	4"	N/A
8.5x7.5x4.08 Std Top Cnr	8 5/8"	4"	N/A
9.0x7.5x4.08 Std Top Cnr	8 3/8"	4"	N/A
9.5x7.5x4.08 Std Top Cnr	8 1/4"	4"	N/A
10.0x7.5x4.08 Std Top Cnr	8 1/8"	4"	N/A

REBAR SCHEDULES

5.5x7.5x4.08 Std Top Cnr — **HIGHWAY REBAR**

Unit Dims	Bar Mark	Qnty	Size	Length	Dim "A"	Bar Weight	Bend Dia	Remarks
H=5'6"	H-1	5 ea	#4	7'2"		23.94 lbs		
W=7'6"	U-1	2 ea	#3	6'3"		4.70 lbs	D= 2 1/4"	
S=4'1"	V-2	6 ea	#5	5'2"		32.33 lbs		
SH=5'0"	S-1	6 ea	#4	4'0 1/4"		16.12 lbs	D= 3"	
	TB-1	6 ea	#4	7'1 1/4"	3'5 3/4"	28.46 lbs	D= 3"	
	U-2	2 ea	#6	4'8 1/2"		14.14 lbs	D= 4 1/2"	
	V-1	2 ea	#4	4'8"		6.23 lbs		
						125.92 lbs		

6.0x7.5x4.08 Std Top Cnr — **HIGHWAY REBAR**

Unit Dims	Bar Mark	Qnty	Size	Length	Dim "A"	Bar Weight	Bend Dia	Remarks
H=6'0"	H-1	5 ea	#4	7'2"		23.94 lbs		
W=7'6"	U-1	2 ea	#3	6'3"		4.70 lbs	D= 2 1/4"	
S=4'1"	V-2	6 ea	#5	5'8"		35.46 lbs		
SH=5'0"	S-1	6 ea	#4	4'0 1/4"		16.12 lbs	D= 3"	
	TB-1	6 ea	#4	7'1 1/4"	3'5 3/4"	28.46 lbs	D= 3"	
	U-2	2 ea	#6	4'8 1/2"		14.14 lbs	D= 4 1/2"	
	V-1	2 ea	#4	4'8"		6.23 lbs		
						129.05 lbs		

6.5x7.5x4.08 Std Top Cnr — **HIGHWAY REBAR**

Unit Dims	Bar Mark	Qnty	Size	Length	Dim "A"	Bar Weight	Bend Dia	Remarks
H=6'6"	H-1	6 ea	#4	7'2"		28.72 lbs		
W=7'6"	U-1	2 ea	#3	6'3"		4.70 lbs	D= 2 1/4"	
S=4'1"	V-2	6 ea	#5	6'2"		38.59 lbs		
SH=5'0"	S-1	6 ea	#4	4'0 1/4"		16.12 lbs	D= 3"	
	TB-1	6 ea	#4	7'1 1/4"	3'5 3/4"	28.46 lbs	D= 3"	
	U-2	2 ea	#6	4'8 1/2"		14.14 lbs	D= 4 1/2"	
	V-1	2 ea	#4	4'8"		6.23 lbs		
						136.97 lbs		

7.0x7.5x4.08 Std Top Cnr — **HIGHWAY REBAR**

Unit Dims	Bar Mark	Qnty	Size	Length	Dim "A"	Bar Weight	Bend Dia	Remarks
H=7'0"	H-1	6 ea	#4	7'2"		28.72 lbs		
W=7'6"	U-1	2 ea	#3	6'3"		4.70 lbs	D= 2 1/4"	
S=4'1"	V-2	6 ea	#5	6'8"		41.72 lbs		
SH=5'0"	S-1	6 ea	#4	4'0 1/4"		16.12 lbs	D= 3"	
	TB-1	6 ea	#4	7'1 1/4"	3'5 3/4"	28.46 lbs	D= 3"	
	U-2	2 ea	#6	4'8 1/2"		14.14 lbs	D= 4 1/2"	
	V-1	2 ea	#4	4'8"		6.23 lbs		
						140.10 lbs		

7.5x7.5x4.08 Std Top Cnr — **HIGHWAY REBAR**

Unit Dims	Bar Mark	Qnty	Size	Length	Dim "A"	Bar Weight	Bend Dia	Remarks
H=7'6"	H-1	7 ea	#4	7'2"		33.51 lbs		
W=7'6"	U-1	2 ea	#3	6'3"		4.70 lbs	D= 2 1/4"	
S=4'1"	V-2	6 ea	#5	7'2"		44.85 lbs		
SH=5'0"	S-1	6 ea	#4	4'0 1/4"		16.12 lbs	D= 3"	
	TB-1	6 ea	#4	7'1 1/4"	3'5 3/4"	28.46 lbs	D= 3"	
	U-2	2 ea	#6	4'8 1/2"		14.14 lbs	D= 4 1/2"	
	V-1	2 ea	#4	4'8"		6.23 lbs		
						148.01 lbs		

REBAR SCHEDULES

8.0x7.5x4.08 Std Top Cnr — **HIGHWAY REBAR**

Unit Dims	Bar Mark	Qnty	Size	Length	Dim "A"	Bar Weight	Remarks
H=8'0"	H-1	7 ea	#4	7'2"		33.51 lbs	
W=7'6"	U-1	2 ea	#3	6'3"		4.70 lbs	
S=4'1"	V-2	6 ea	#5	7'8"		47.98 lbs	
SH=5'0"	S-1	6 ea	#4	4'0 1/4"		16.12 lbs	
	TB-1	6 ea	#4	7'1 1/4"	3'5 3/4"	28.46 lbs	
	U-2	2 ea	#6	4'8 1/2"		14.14 lbs	
	V-1	2 ea	#4	4'8"		6.23 lbs	
						151.14 lbs	

8.5x7.5x4.08 Std Top Cnr — **HIGHWAY REBAR**

Unit Dims	Bar Mark	Qnty	Size	Length	Dim "A"	Bar Weight	Remarks
H=8'6"	H-1	8 ea	#4	7'2"		38.30 lbs	
W=7'6"	U-1	2 ea	#3	6'3"		4.70 lbs	
S=4'1"	V-2	6 ea	#5	8'2"		51.11 lbs	
SH=5'0"	S-1	6 ea	#4	4'0 1/4"		16.12 lbs	
	TB-1	6 ea	#5	7'1 1/4"	3'5 3/4"	44.44 lbs	
	U-2	2 ea	#6	4'8 1/2"		14.14 lbs	
	V-1	2 ea	#4	4'8"		6.23 lbs	
						175.04 lbs	

9.0x7.5x4.08 Std Top Cnr — **HIGHWAY REBAR**

Unit Dims	Bar Mark	Qnty	Size	Length	Dim "A"	Bar Weight	Remarks
H=9'0"	H-1	8 ea	#4	7'2"		38.30 lbs	
W=7'6"	U-1	2 ea	#3	6'3"		4.70 lbs	
S=4'1"	V-2	6 ea	#6	8'8"		78.10 lbs	
SH=5'0"	S-1	6 ea	#4	4'0 1/4"		16.12 lbs	
	TB-1	6 ea	#6	7'1 1/4"	3'5 3/4"	63.99 lbs	
	U-2	2 ea	#6	4'8 1/2"		14.14 lbs	
	V-1	2 ea	#4	4'8"		6.23 lbs	
						221.59 lbs	

9.5x7.5x4.08 Std Top Cnr — **HIGHWAY REBAR**

Unit Dims	Bar Mark	Qnty	Size	Length	Dim "A"	Bar Weight	Remarks
H=9'6"	H-1	9 ea	#4	7'2"		43.09 lbs	
W=7'6"	U-1	2 ea	#3	6'3"		4.70 lbs	
S=4'1"	V-2	6 ea	#6	9'2"		82.61 lbs	
SH=5'0"	S-1	6 ea	#4	4'0 1/4"		16.12 lbs	
	TB-1	6 ea	#6	7'1 1/4"	3'5 3/4"	63.99 lbs	
	U-2	2 ea	#6	4'8 1/2"		14.14 lbs	
	V-1	2 ea	#4	4'8"		6.23 lbs	
						230.88 lbs	

10.0x7.5x4.08 Std Top Cnr — **HIGHWAY REBAR**

Unit Dims	Bar Mark	Qnty	Size	Length	Dim "A"	Bar Weight	Remarks
H=10'0"	H-1	9 ea	#4	7'2"		43.09 lbs	
W=7'6"	U-1	2 ea	#3	6'3"		4.70 lbs	
S=4'1"	V-2	6 ea	#7	9'8"		118.55 lbs	
SH=5'0"	S-1	6 ea	#4	4'0 1/4"		16.12 lbs	
	TB-1	6 ea	#6	7'1 1/4"	3'5 3/4"	63.99 lbs	
	U-2	2 ea	#6	4'8 1/2"		14.14 lbs	
	V-1	2 ea	#4	4'8"		6.23 lbs	
						266.82 lbs	

PA DOT DWG # 87-402 PE (REVISION IV)

COMMONWEALTH OF PENNSYLVANIA
DEPARTMENT OF TRANSPORTATION
BUREAU OF PROJECT DELIVERY

T-WALL® STANDARDS
PREFABRICATED T-WALL® RETAINING WALL SYSTEM

SHOP DRAWINGS
REBAR
7.50' WIDE STANDARD TOP CORNER UNITS - 4'-1" STEM (III)

4/13/2017

DESIGNER

THE NEEL COMPANY
8328-D TRAFORD LANE
SPRINGFIELD, VA 22152
PH: (703) 913-7858
FX: (703) 913-7859
Web: www.neelco.com

This drawing contains information proprietary to The Neel Company. The Neel Company is the exclusive licensee of the T-WALL® patent. © 2017, The Neel Company

DATE:	03-23-17
SCALE:	NO SCALE
DESIGNED:	JMC
DRAWN:	CJW
CHECKED:	CCG/KD
TNC JOB #:	TW3634
TNC SHT #59 OF 67	

SHEET 59 OF 67

87-402 PE

DATE: 03-23-17 TNC JOB #: TW3634 PLOT DATE AND TIME: Wednesday, March 22, 2017 15:51:34 CAD FILE NAME: 057 Rebar - RWY Std Top Cnr 4.08 r4-0.vwx

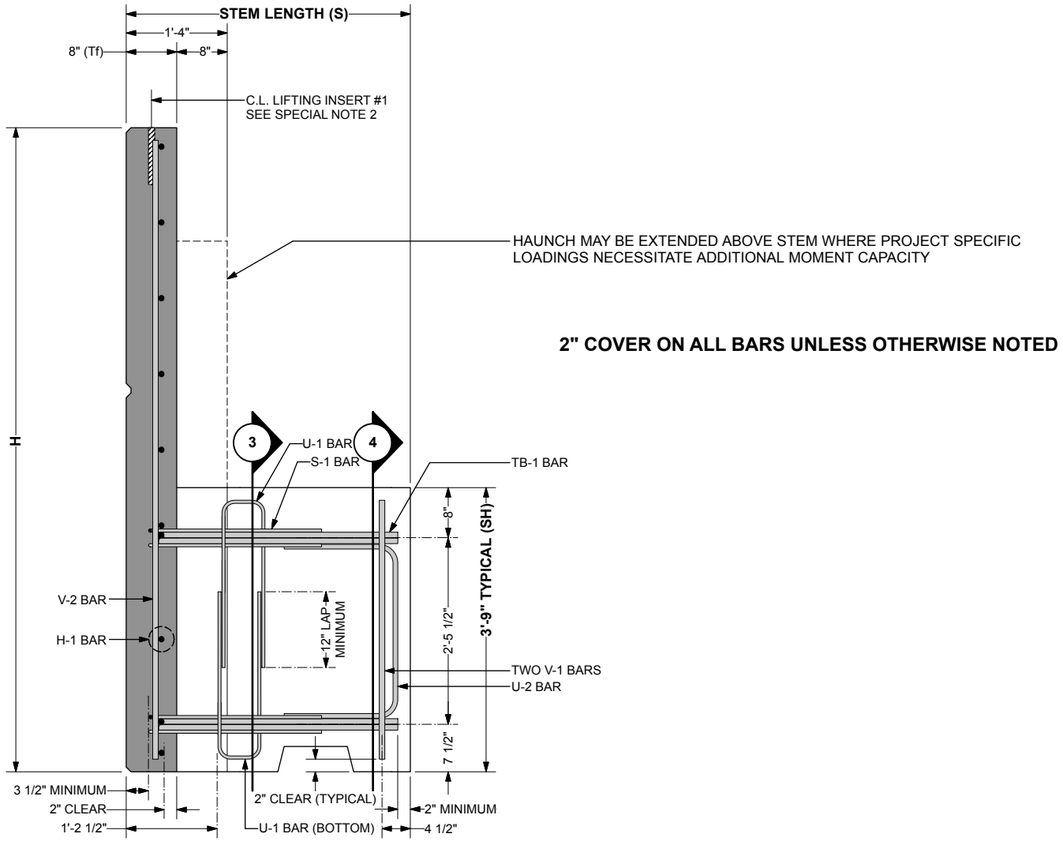

2" COVER ON ALL BARS UNLESS OTHERWISE NOTED

1 **SIDE VIEW - THREE QUARTER TOP UNIT (8.5 x 7.5 x 3.75 Tqr Top Cnr SHOWN)**
Scale: 1" = 1'-0"

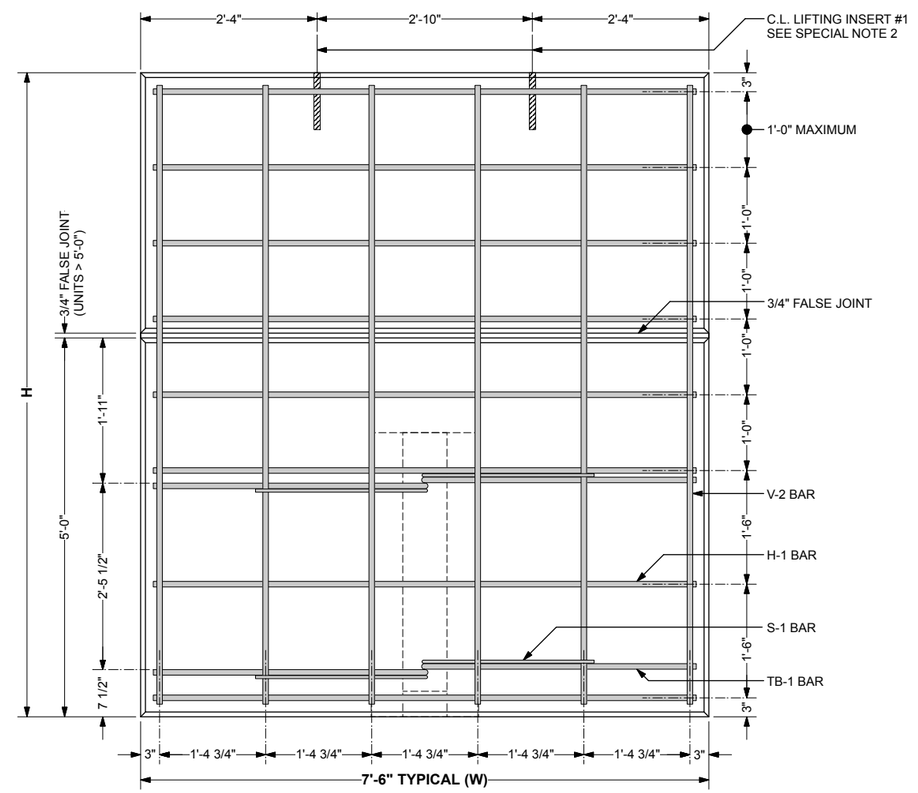

2 **FRONT VIEW - THREE QUARTER TOP UNIT (8.5 x 7.5 x 3.75 Tqr Top Cnr SHOWN)**
Scale: 1" = 1'-0"
(U-1 BARS IN STEM OMITTED FOR CLARITY)

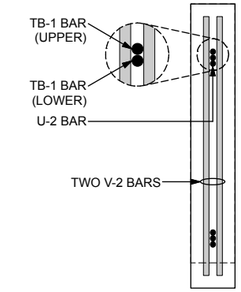

4 **SECTION THROUGH STEM**
Scale: 1" = 1'-0"

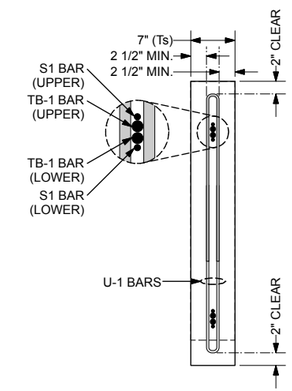

3 **SECTION THROUGH STEM**
Scale: 1" = 1'-0"

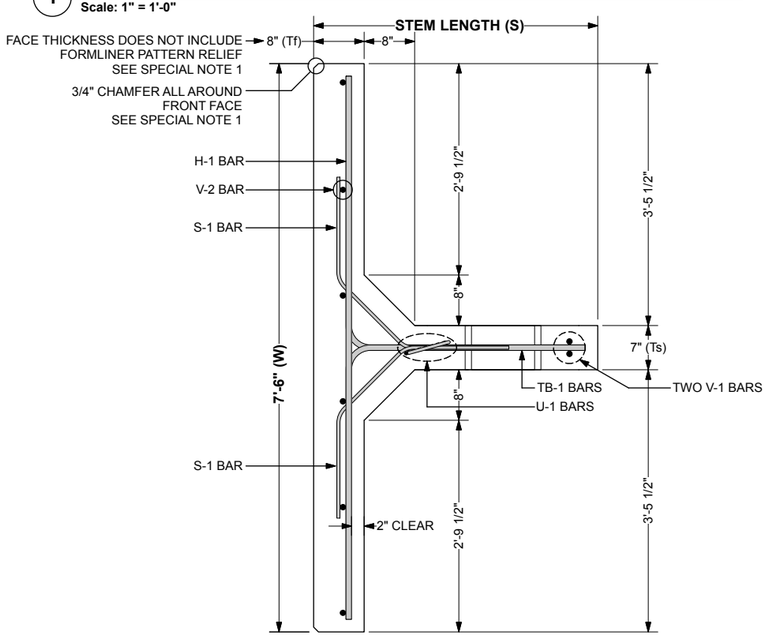

5 **PLAN VIEW AT STEM - THREE QUARTER TOP UNIT (3'-9" STEM SHOWN)**
Scale: 1" = 1'-0"

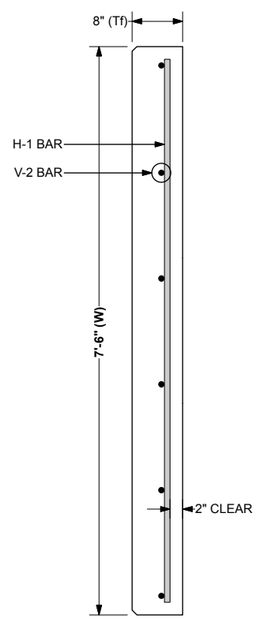

6 **PLAN VIEW - EXTENDED FACE PANEL**
Scale: 1" = 1'-0"

4/13/2017

DESIGNER

THE NEEL COMPANY
8328-D TRAFORD LANE
SPRINGFIELD, VA 22152
PH: (703) 913-7858
FX: (703) 913-7859
Web: www.neelco.com

This drawing contains information proprietary to The Neel Company. The Neel Company is the exclusive licensee of the T-WALL® patent. © 2017, The Neel Company

DATE:	03-23-17
SCALE:	AS NOTED
DESIGNED:	JMC
DRAWN:	CJW
CHECKED:	CCG/KD
TNC JOB #:	TW3634
TNC SHT #60 OF 67	

PA DOT DWG # 87-402 PE (REVISION IV)

COMMONWEALTH OF PENNSYLVANIA
DEPARTMENT OF TRANSPORTATION
BUREAU OF PROJECT DELIVERY

T-WALL® STANDARDS
PREFABRICATED T-WALL® RETAINING WALL SYSTEM

SHOP DRAWINGS
REBAR
THREE QUARTER TOP CORNER UNITS - 3'-9" STEM (I)

SHEET 60 OF 67

87-402 PE

DATE: 03-23-17 TNC JOB #: TW3634 PLOT DATE AND TIME: Wednesday, March 22, 2017 15:51:26 CAD FILE NAME: 060 Rebar - RWY Tqr Top Cnr 3.42 r4-0.vwx

T-WALL UNIT PROPERTIES

UNIT TYPE	H	W	S	Tf*	SH	VOLUME*	WEIGHT*
4.0x7.5x3.75 Tqr Top Cnr	4'0"	7'6"	3'9"	8"	3'9"	1.05 cy	4,238 lbs
4.5x7.5x3.75 Tqr Top Cnr	4'6"	7'6"	3'9"	8"	3'9"	1.14 cy	4,613 lbs
5.0x7.5x3.75 Tqr Top Cnr	5'0"	7'6"	3'9"	8"	3'9"	1.23 cy	4,988 lbs
5.5x7.5x3.75 Tqr Top Cnr	5'6"	7'6"	3'9"	8"	3'9"	1.32 cy	5,363 lbs
6.0x7.5x3.75 Tqr Top Cnr	6'0"	7'6"	3'9"	8"	3'9"	1.42 cy	5,738 lbs
6.5x7.5x3.75 Tqr Top Cnr	6'6"	7'6"	3'9"	8"	3'9"	1.51 cy	6,113 lbs
7.0x7.5x3.75 Tqr Top Cnr	7'0"	7'6"	3'9"	8"	3'9"	1.60 cy	6,488 lbs
7.5x7.5x3.75 Tqr Top Cnr	7'6"	7'6"	3'9"	8"	3'9"	1.69 cy	6,863 lbs
8.0x7.5x3.75 Tqr Top Cnr	8'0"	7'6"	3'9"	8"	3'9"	1.79 cy	7,238 lbs
8.5x7.5x3.75 Tqr Top Cnr	8'6"	7'6"	3'9"	8"	3'9"	1.88 cy	7,613 lbs

*** VOLUMES AND WEIGHTS ON THIS TABLE ARE BASED ON 8" FACE THICKNESS (Tf)**
FORMLINER FINISHES MAY INCREASE FACE THICKNESS, VOLUME AND WEIGHT.

LIFTING INSERT DATA

UNIT TYPE	DISTANCE TO CENTROID FROM FRONT FACE	DISTANCE TO INSERT #1 FROM FRONT FACE	DISTANCE TO INSERT #2 FROM FRONT FACE
4.0x7.5x3.75 Tqr Top Cnr	9 3/8"	4"	N/A
4.5x7.5x3.75 Tqr Top Cnr	9"	4"	N/A
5.0x7.5x3.75 Tqr Top Cnr	8 5/8"	4"	N/A
5.5x7.5x3.75 Tqr Top Cnr	8 3/8"	4"	N/A
6.0x7.5x3.75 Tqr Top Cnr	8 1/8"	4"	N/A
6.5x7.5x3.75 Tqr Top Cnr	7 7/8"	4"	N/A
7.0x7.5x3.75 Tqr Top Cnr	7 3/4"	4"	N/A
7.5x7.5x3.75 Tqr Top Cnr	7 1/2"	4"	N/A
8.0x7.5x3.75 Tqr Top Cnr	7 3/8"	4"	N/A
8.5x7.5x3.75 Tqr Top Cnr	7 1/4"	4"	N/A

SPECIAL NOTES:

1. FRONT FACE OF T-WALL® UNITS FINISH TREATMENT:
   - PER CONTRACT DRAWINGS AND SPECS.
   - MINIMUM FRONT FACE THICKNESS SHALL BE 8"
2. LIFTING INSERTS:
   - MEADOW BURKE RAPID LIFT RL-22 LIFTING INSERT WITH RL-32 REBAR OR DAYTON SUPERIOR P-53 5-TON SWIFT LIFT EYE WITH P-60 TENSION BAR.
   - 8000 LBS (4 TONS) MINIMUM RATED WORKING LOAD CAPACITY.
   - REFER TO LIFTING INSERT DATA TABLE FOR INSERT LOCATIONS.
   - LIFTING INSERTS TO BE GALVANIZED.

GENERAL NOTES:

1. PRIMARY REFERENCE: AASHTO LRFD BRIDGE SPECIFICATIONS, 5th EDITION, 2010 WITH INTERIM REVISIONS
2. MINIMUM CONCRETE COVER IS DESIGNED FOR 2" ON ALL BARS. TOLERANCES PER CONSTRUCTION SPECIFICATIONS SECTION 2.0.
3. ALL MATERIAL AND TOLERANCES IN ACCORDS TO T-WALL® CONSTRUCTION SPECIFICATIONS, SECTION 2.0 MATERIALS.
4. REBAR:
   - SEE CONSTRUCTION SPECIFICATION, SECTION 2.0 MATERIALS OR PER CONTRACT DRAWINGS AND SPECS.
5. CONCRETE:
   - F'c = 5000 psi @ 28 DAYS

REBAR SCHEDULES

4.0x7.5x3.75 Tqr Top Cnr — **HIGHWAY REBAR**

Unit Dims	Bar Mark	Qnty	Size	Length	Dim "A"	Bar Weight	Remarks
H=4'0"	H-1	4 ea	#4	7'2"		19.15 lbs	
W=7'6"	U-1	2 ea	#3	5'0"		3.76 lbs	
S=3'9"	V-2	6 ea	#5	3'8"		22.95 lbs	
SH=3'9"	S-1	4 ea	#4	4'0 1/4"		10.74 lbs	
	TB-1	4 ea	#4	6'9 1/4"	3'1 3/4"	18.09 lbs	
	U-2	1 ea	#6	5'4"		8.01 lbs	
	V-1	2 ea	#4	3'5"		4.56 lbs	
						87.27 lbs	

4.5x7.5x3.75 Tqr Top Cnr — **HIGHWAY REBAR**

Unit Dims	Bar Mark	Qnty	Size	Length	Dim "A"	Bar Weight	Remarks
H=4'6"	H-1	4 ea	#4	7'2"		19.15 lbs	
W=7'6"	U-1	2 ea	#3	5'0"		3.76 lbs	
S=3'9"	V-2	6 ea	#5	4'2"		26.08 lbs	
SH=3'9"	S-1	4 ea	#4	4'0 1/4"		10.74 lbs	
	TB-1	4 ea	#4	6'9 1/4"	3'1 3/4"	18.09 lbs	
	U-2	1 ea	#6	5'4"		8.01 lbs	
	V-1	2 ea	#4	3'5"		4.56 lbs	
						90.40 lbs	

5.0x7.5x3.75 Tqr Top Cnr — **HIGHWAY REBAR**

Unit Dims	Bar Mark	Qnty	Size	Length	Dim "A"	Bar Weight	Remarks
H=5'0"	H-1	5 ea	#4	7'2"		23.94 lbs	
W=7'6"	U-1	2 ea	#3	5'0"		3.76 lbs	
S=3'9"	V-2	6 ea	#5	4'8"		29.20 lbs	
SH=3'9"	S-1	4 ea	#4	4'0 1/4"		10.74 lbs	
	TB-1	4 ea	#4	6'9 1/4"	3'1 3/4"	18.09 lbs	
	U-2	1 ea	#6	5'4"		8.01 lbs	
	V-1	2 ea	#4	3'5"		4.56 lbs	
						98.31 lbs	

5.5x7.5x3.75 Tqr Top Cnr — **HIGHWAY REBAR**

Unit Dims	Bar Mark	Qnty	Size	Length	Dim "A"	Bar Weight	Remarks
H=5'6"	H-1	5 ea	#4	7'2"		23.94 lbs	
W=7'6"	U-1	2 ea	#3	5'0"		3.76 lbs	
S=3'9"	V-2	6 ea	#5	5'2"		32.33 lbs	
SH=3'9"	S-1	4 ea	#4	4'0 1/4"		10.74 lbs	
	TB-1	4 ea	#4	6'9 1/4"	3'1 3/4"	18.09 lbs	
	U-2	1 ea	#6	5'4"		8.01 lbs	
	V-1	2 ea	#4	3'5"		4.56 lbs	
						101.44 lbs	

6.0x7.5x3.75 Tqr Top Cnr — **HIGHWAY REBAR**

Unit Dims	Bar Mark	Qnty	Size	Length	Dim "A"	Bar Weight	Remarks
H=6'0"	H-1	6 ea	#4	7'2"		28.72 lbs	
W=7'6"	U-1	2 ea	#3	5'0"		3.76 lbs	
S=3'9"	V-2	6 ea	#5	5'8"		35.46 lbs	
SH=3'9"	S-1	4 ea	#4	4'0 1/4"		10.74 lbs	
	TB-1	4 ea	#4	6'9 1/4"	3'1 3/4"	18.09 lbs	
	U-2	1 ea	#6	5'4"		8.01 lbs	
	V-1	2 ea	#4	3'5"		4.56 lbs	
						109.36 lbs	

REBAR SCHEDULES

6.5x7.5x3.75 Tqr Top Cnr — **HIGHWAY REBAR**

Unit Dims	Bar Mark	Qnty	Size	Length	Dim "A"	Bar Weight	Remarks
H=6'6"	H-1	6 ea	#4	7'2"		28.72 lbs	
W=7'6"	U-1	2 ea	#3	5'0"		3.76 lbs	
S=3'9"	V-2	6 ea	#5	6'2"		38.59 lbs	
SH=3'9"	S-1	4 ea	#4	4'0 1/4"		10.74 lbs	
	TB-1	4 ea	#5	6'9 1/4"	3'1 3/4"	28.25 lbs	
	U-2	1 ea	#6	5'4"		8.01 lbs	
	V-1	2 ea	#4	3'5"		4.56 lbs	
						122.64 lbs	

7.0x7.5x3.75 Tqr Top Cnr — **HIGHWAY REBAR**

Unit Dims	Bar Mark	Qnty	Size	Length	Dim "A"	Bar Weight	Remarks
H=7'0"	H-1	7 ea	#4	7'2"		33.51 lbs	
W=7'6"	U-1	2 ea	#3	5'0"		3.76 lbs	
S=3'9"	V-2	6 ea	#5	6'8"		41.72 lbs	
SH=3'9"	S-1	4 ea	#4	4'0 1/4"		10.74 lbs	
	TB-1	4 ea	#5	6'9 1/4"	3'1 3/4"	28.25 lbs	
	U-2	1 ea	#6	5'4"		8.01 lbs	
	V-1	2 ea	#4	3'5"		4.56 lbs	
						130.56 lbs	

7.5x7.5x3.75 Tqr Top Cnr — **HIGHWAY REBAR**

Unit Dims	Bar Mark	Qnty	Size	Length	Dim "A"	Bar Weight	Remarks
H=7'6"	H-1	7 ea	#4	7'2"		33.51 lbs	
W=7'6"	U-1	2 ea	#3	5'0"		3.76 lbs	
S=3'9"	V-2	6 ea	#5	7'2"		44.85 lbs	
SH=3'9"	S-1	4 ea	#4	4'0 1/4"		10.74 lbs	
	TB-1	4 ea	#5	6'9 1/4"	3'1 3/4"	28.25 lbs	
	U-2	1 ea	#6	5'4"		8.01 lbs	
	V-1	2 ea	#4	3'5"		4.56 lbs	
						133.69 lbs	

8.0x7.5x3.75 Tqr Top Cnr — **HIGHWAY REBAR**

Unit Dims	Bar Mark	Qnty	Size	Length	Dim "A"	Bar Weight	Remarks
H=8'0"	H-1	8 ea	#4	7'2"		38.30 lbs	
W=7'6"	U-1	2 ea	#3	5'0"		3.76 lbs	
S=3'9"	V-2	6 ea	#6	7'8"		69.09 lbs	
SH=3'9"	S-1	4 ea	#4	4'0 1/4"		10.74 lbs	
	TB-1	4 ea	#6	6'9 1/4"	3'1 3/4"	40.68 lbs	
	U-2	1 ea	#6	5'4"		8.01 lbs	
	V-1	2 ea	#4	3'5"		4.56 lbs	
						175.15 lbs	

8.5x7.5x3.75 Tqr Top Cnr — **HIGHWAY REBAR**

Unit Dims	Bar Mark	Qnty	Size	Length	Dim "A"	Bar Weight	Remarks
H=8'6"	H-1	8 ea	#4	7'2"		38.30 lbs	
W=7'6"	U-1	2 ea	#3	5'0"		3.76 lbs	
S=3'9"	V-2	6 ea	#7	8'2"		100.16 lbs	
SH=3'9"	S-1	4 ea	#4	4'0 1/4"		10.74 lbs	
	TB-1	4 ea	#6	6'9 1/4"	3'1 3/4"	40.68 lbs	
	U-2	1 ea	#6	5'4"		8.01 lbs	
	V-1	2 ea	#4	3'5"		4.56 lbs	
						206.21 lbs	

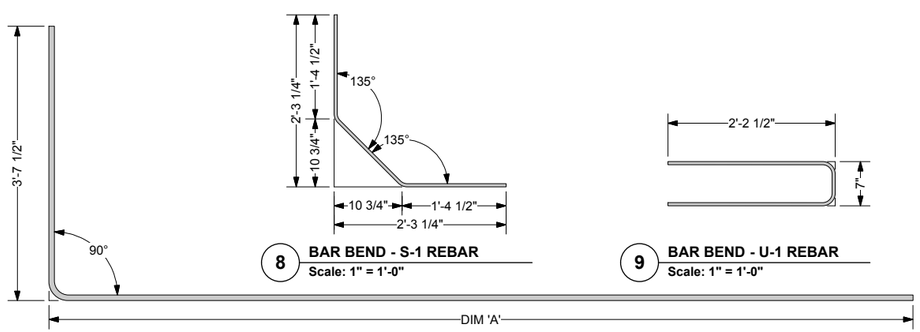

7 BAR BEND - TB-1 REBAR
Scale: 1" = 1'-0"

8 BAR BEND - S-1 REBAR
Scale: 1" = 1'-0"

9 BAR BEND - U-1 REBAR
Scale: 1" = 1'-0"

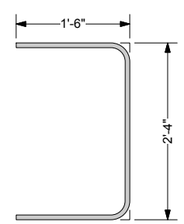

10 BAR BEND - U-2 REBAR
Scale: 1" = 1'-0"

4/13/2017

DESIGNER

THE NEEL COMPANY
8328-D TRAFORD LANE
SPRINGFIELD, VA 22152
PH: (703) 913-7858
FX: (703) 913-7859
Web: www.neelco.com

This drawing contains information proprietary to The Neel Company. The Neel Company is the exclusive licensee of the T-WALL® patent. © 2017, The Neel Company

DATE:	03-23-17
SCALE:	AS NOTED
DESIGNED:	JMC
DRAWN:	CJW
CHECKED:	CCG/KD
TNC JOB #:	TW3634
TNC SHT #:	61 OF 67

PA DOT DWG # 87-402 PE (REVISION IV)

COMMONWEALTH OF PENNSYLVANIA
DEPARTMENT OF TRANSPORTATION
BUREAU OF PROJECT DELIVERY

T-WALL® STANDARDS
PREFABRICATED T-WALL® RETAINING WALL SYSTEM

SHOP DRAWINGS
REBAR
THREE QUARTER TOP CORNER UNITS - 3'-9" STEM (II)

SHEET 61 OF 67

87-402 PE

DATE: 03-23-17 TNC JOB #: TW3634 PLOT DATE AND TIME: Wednesday, March 22, 2017 15:51:26 CAD FILE NAME: 060 Rebar - RWY Tqr Top Cnr 3.42 r4-0.vwx

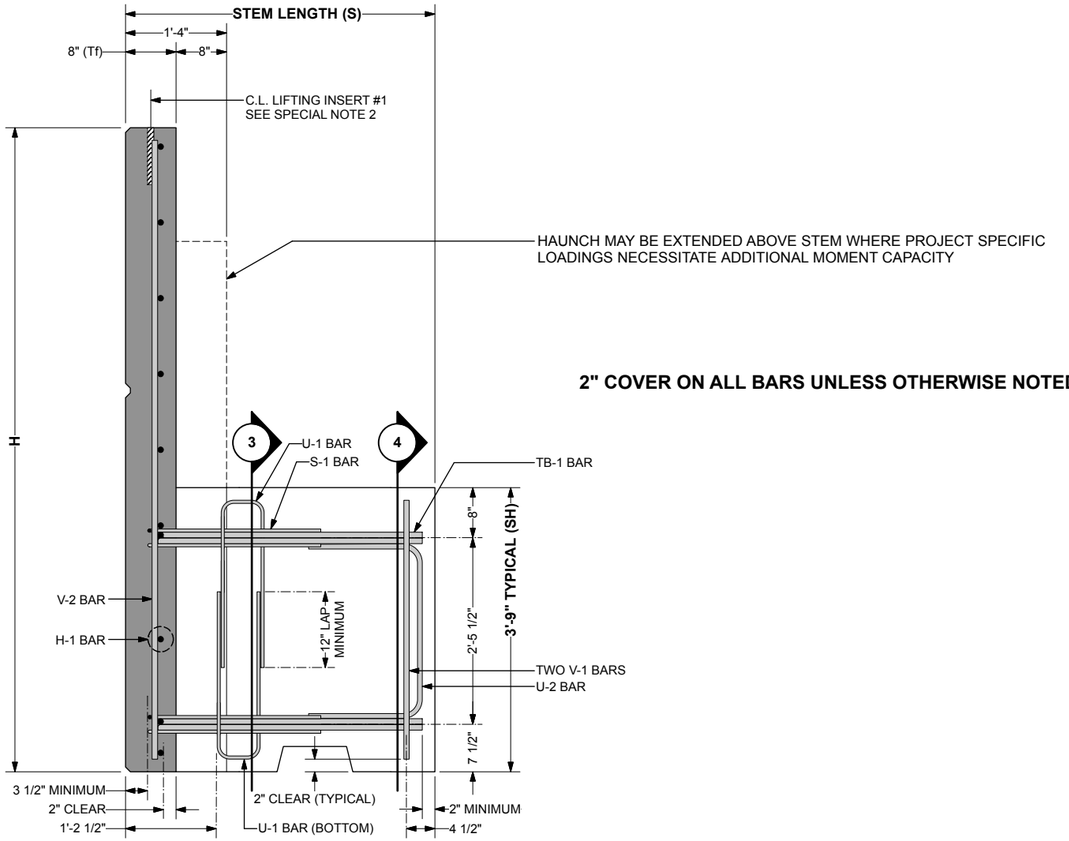

2" COVER ON ALL BARS UNLESS OTHERWISE NOTED

1 **SIDE VIEW - THREE QUARTER TOP UNIT (8.5 x 7.5 x 4.08 Tqr Top Cnr SHOWN)**
Scale: 1" = 1'-0"

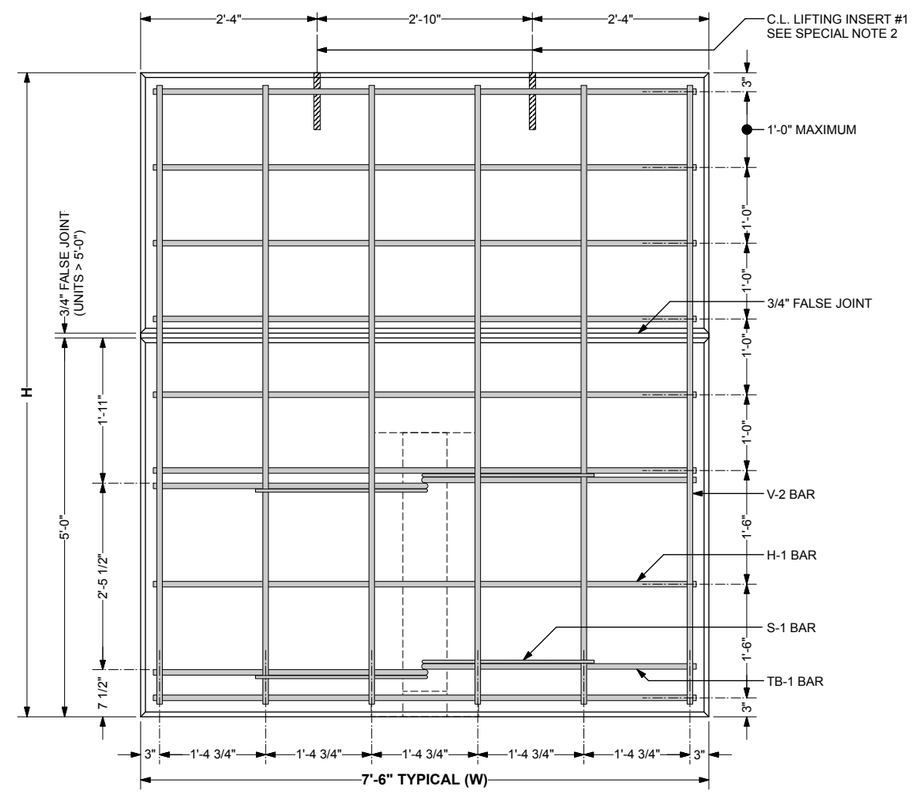

2 **FRONT VIEW - THREE QUARTER TOP UNIT (8.5 x 7.5 x 4.08 Tqr Top Cnr SHOWN)**
Scale: 1" = 1'-0"
(U-1 BARS IN STEM OMITTED FOR CLARITY)

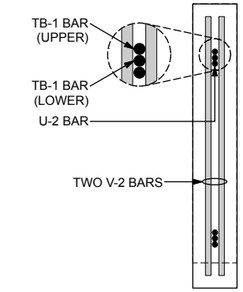

4 **SECTION THROUGH STEM**
Scale: 1" = 1'-0"

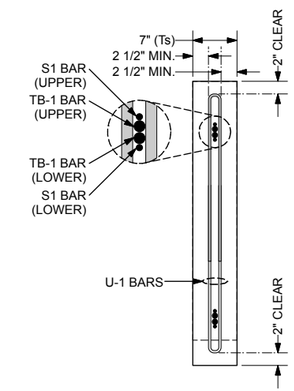

3 **SECTION THROUGH STEM**
Scale: 1" = 1'-0"

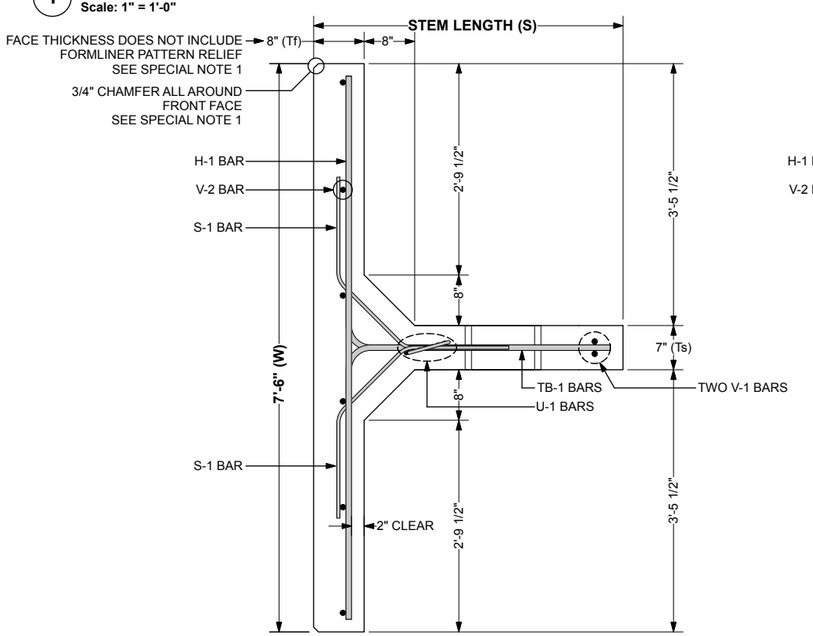

5 **PLAN VIEW AT STEM - THREE QUARTER TOP UNIT (4'-1" STEM SHOWN)**
Scale: 1" = 1'-0"

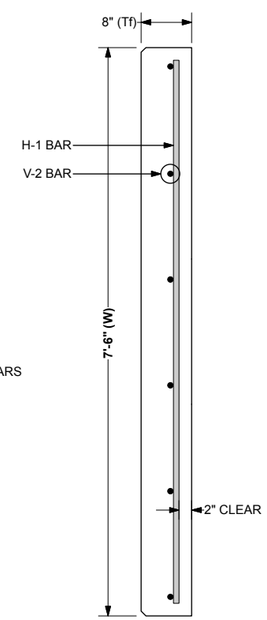

6 **PLAN VIEW - EXTENDED FACE PANEL**
Scale: 1" = 1'-0"

4/13/2017

DESIGNER	
THE NEEL COMPANY 8328-D TRAFORD LANE SPRINGFIELD, VA 22152 PH: (703) 913-7858 FX: (703) 913-7859 Web: www.neelco.com	DATE: 03-23-17
	SCALE: AS NOTED
	DESIGNED: JMC
	DRAWN: CJW
	CHECKED: CCG/KD
	TNC JOB #: TW3634
	TNC SHT #62 OF 67

This drawing contains information proprietary to The Neel Company. The Neel Company is the exclusive licensee of the T-WALL® patent. © 2017, The Neel Company

PA DOT DWG # 87-402 PE (REVISION IV)

COMMONWEALTH OF PENNSYLVANIA
DEPARTMENT OF TRANSPORTATION
BUREAU OF PROJECT DELIVERY

T-WALL® STANDARDS
PREFABRICATED T-WALL® RETAINING WALL SYSTEM

SHOP DRAWINGS
REBAR
THREE QUARTER TOP CORNER UNITS - 4'-1" STEM (I)

SHEET 62 OF 67

87-402 PE

DATE: 03-23-17 TNC JOB #: TW3634 PLOT DATE AND TIME: Wednesday, March 22, 2017 15:51:18 CAD FILE NAME: 062 Rebar - RWY Tqr Top Cnr 4.08 r4-0.vwx

T-WALL UNIT PROPERTIES

UNIT TYPE	H	W	S	Tf*	SH	VOLUME*	WEIGHT*
4.0x7.5x4.08 Tqr Top Cnr	4'0"	7'6"	4'1"	8"	3'9"	1.07 cy	4,342 lbs
4.5x7.5x4.08 Tqr Top Cnr	4'6"	7'6"	4'1"	8"	3'9"	1.16 cy	4,717 lbs
5.0x7.5x4.08 Tqr Top Cnr	5'0"	7'6"	4'1"	8"	3'9"	1.26 cy	5,092 lbs
5.5x7.5x4.08 Tqr Top Cnr	5'6"	7'6"	4'1"	8"	3'9"	1.35 cy	5,467 lbs
6.0x7.5x4.08 Tqr Top Cnr	6'0"	7'6"	4'1"	8"	3'9"	1.44 cy	5,842 lbs
6.5x7.5x4.08 Tqr Top Cnr	6'6"	7'6"	4'1"	8"	3'9"	1.54 cy	6,217 lbs
7.0x7.5x4.08 Tqr Top Cnr	7'0"	7'6"	4'1"	8"	3'9"	1.63 cy	6,592 lbs
7.5x7.5x4.08 Tqr Top Cnr	7'6"	7'6"	4'1"	8"	3'9"	1.72 cy	6,967 lbs
8.0x7.5x4.08 Tqr Top Cnr	8'0"	7'6"	4'1"	8"	3'9"	1.81 cy	7,342 lbs
8.5x7.5x4.08 Tqr Top Cnr	8'6"	7'6"	4'1"	8"	3'9"	1.91 cy	7,717 lbs

*** VOLUMES AND WEIGHTS ON THIS TABLE ARE BASED ON 8" FACE THICKNESS (Tf)**
FORMLINER FINISHES MAY INCREASE FACE THICKNESS, VOLUME AND WEIGHT.

LIFTING INSERT DATA

UNIT TYPE	DISTANCE TO CENTROID FROM FRONT FACE	DISTANCE TO INSERT #1 FROM FRONT FACE	DISTANCE TO INSERT #2 FROM FRONT FACE
4.0x7.5x4.08 Tqr Top Cnr	10 1/4"	4"	N/A
4.5x7.5x4.08 Tqr Top Cnr	9 3/4"	4"	N/A
5.0x7.5x4.08 Tqr Top Cnr	9 3/8"	4"	N/A
5.5x7.5x4.08 Tqr Top Cnr	9"	4"	N/A
6.0x7.5x4.08 Tqr Top Cnr	8 3/4"	4"	N/A
6.5x7.5x4.08 Tqr Top Cnr	8 1/2"	4"	N/A
7.0x7.5x4.08 Tqr Top Cnr	8 1/4"	4"	N/A
7.5x7.5x4.08 Tqr Top Cnr	8 1/8"	4"	N/A
8.0x7.5x4.08 Tqr Top Cnr	7 7/8"	4"	N/A
8.5x7.5x4.08 Tqr Top Cnr	7 3/4"	4"	N/A

SPECIAL NOTES:

1. FRONT FACE OF T-WALL® UNITS FINISH TREATMENT:
   - PER CONTRACT DRAWINGS AND SPECS.
   - MINIMUM FRONT FACE THICKNESS SHALL BE 8"
2. LIFTING INSERTS:
   - MEADOW BURKE RAPID LIFT RL-22 LIFTING INSERT WITH RL-32 REBAR OR DAYTON SUPERIOR P-53 5-TON SWIFT LIFT EYE WITH P-60 TENSION BAR.
   - 8000 LBS (4 TONS) MINIMUM RATED WORKING LOAD CAPACITY.
   - REFER TO LIFTING INSERT DATA TABLE FOR INSERT LOCATIONS.
   - LIFTING INSERTS TO BE GALVANIZED.

GENERAL NOTES:

1. PRIMARY REFERENCE: AASHTO LRFD BRIDGE SPECIFICATIONS, 5th EDITION, 2010 WITH INTERIM REVISIONS
2. MINIMUM CONCRETE COVER IS DESIGNED FOR 2" ON ALL BARS. TOLERANCES PER CONSTRUCTION SPECIFICATIONS SECTION 2.0.
3. ALL MATERIAL AND TOLERANCES IN ACCORDS TO T-WALL® CONSTRUCTION SPECIFICATIONS, SECTION 2.0 MATERIALS.
4. REBAR:
   - SEE CONSTRUCTION SPECIFICATION, SECTION 2.0 MATERIALS OR PER CONTRACT DRAWINGS AND SPECS.
5. CONCRETE:
   - F'c = 5000 psi @ 28 DAYS

REBAR SCHEDULES

4.0x7.5x4.08 Tqr Top Cnr — **HIGHWAY REBAR**

Unit Dims	Bar Mark	Qnty	Size	Length	Dim "A"	Bar Weight	Remarks
H=4'0"	H-1	4 ea	#4	7'2"		19.15 lbs	
W=7'6"	U-1	2 ea	#3	5'0"		3.76 lbs	
S=4'1"	V-2	6 ea	#5	3'8"		22.95 lbs	
SH=3'9"	S-1	4 ea	#4	4'0 1/4"		10.74 lbs	
	TB-1	4 ea	#4	7'1 1/4"	3'5 3/4"	18.97 lbs	
	U-2	1 ea	#6	5'4"		8.01 lbs	
	V-1	2 ea	#4	3'5"		4.56 lbs	
						69.00 lbs	

4.5x7.5x4.08 Tqr Top Cnr — **HIGHWAY REBAR**

Unit Dims	Bar Mark	Qnty	Size	Length	Dim "A"	Bar Weight	Remarks
H=4'6"	H-1	4 ea	#4	7'2"		19.15 lbs	
W=7'6"	U-1	2 ea	#3	5'0"		3.76 lbs	
S=4'1"	V-2	6 ea	#5	4'2"		26.08 lbs	
SH=3'9"	S-1	4 ea	#4	4'0 1/4"		10.74 lbs	
	TB-1	4 ea	#4	7'1 1/4"	3'5 3/4"	18.97 lbs	
	U-2	1 ea	#6	5'4"		8.01 lbs	
	V-1	2 ea	#4	3'5"		4.56 lbs	
						72.13 lbs	

5.0x7.5x4.08 Tqr Top Cnr — **HIGHWAY REBAR**

Unit Dims	Bar Mark	Qnty	Size	Length	Dim "A"	Bar Weight	Remarks
H=5'0"	H-1	5 ea	#4	7'2"		23.94 lbs	
W=7'6"	U-1	2 ea	#3	5'0"		3.76 lbs	
S=4'1"	V-2	6 ea	#5	4'8"		29.20 lbs	
SH=3'9"	S-1	4 ea	#4	4'0 1/4"		10.74 lbs	
	TB-1	4 ea	#4	7'1 1/4"	3'5 3/4"	18.97 lbs	
	U-2	1 ea	#6	5'4"		8.01 lbs	
	V-1	2 ea	#4	3'5"		4.56 lbs	
						75.26 lbs	

5.5x7.5x4.08 Tqr Top Cnr — **HIGHWAY REBAR**

Unit Dims	Bar Mark	Qnty	Size	Length	Dim "A"	Bar Weight	Remarks
H=5'6"	H-1	5 ea	#4	7'2"		23.94 lbs	
W=7'6"	U-1	2 ea	#3	5'0"		3.76 lbs	
S=4'1"	V-2	6 ea	#5	5'2"		32.33 lbs	
SH=3'9"	S-1	4 ea	#4	4'0 1/4"		10.74 lbs	
	TB-1	4 ea	#4	7'1 1/4"	3'5 3/4"	18.97 lbs	
	U-2	1 ea	#6	5'4"		8.01 lbs	
	V-1	2 ea	#4	3'5"		4.56 lbs	
						78.39 lbs	

6.0x7.5x4.08 Tqr Top Cnr — **HIGHWAY REBAR**

Unit Dims	Bar Mark	Qnty	Size	Length	Dim "A"	Bar Weight	Remarks
H=6'0"	H-1	6 ea	#4	7'2"		28.72 lbs	
W=7'6"	U-1	2 ea	#3	5'0"		3.76 lbs	
S=4'1"	V-2	6 ea	#5	5'8"		35.46 lbs	
SH=3'9"	S-1	4 ea	#4	4'0 1/4"		10.74 lbs	
	TB-1	4 ea	#4	7'1 1/4"	3'5 3/4"	18.97 lbs	
	U-2	1 ea	#6	5'4"		8.01 lbs	
	V-1	2 ea	#4	3'5"		4.56 lbs	
						81.51 lbs	

REBAR SCHEDULES

6.5x7.5x4.08 Tqr Top Cnr — **HIGHWAY REBAR**

Unit Dims	Bar Mark	Qnty	Size	Length	Dim "A"	Bar Weight	Remarks
H=6'6"	H-1	6 ea	#4	7'2"		28.72 lbs	
W=7'6"	U-1	2 ea	#3	5'0"		3.76 lbs	
S=4'1"	V-2	6 ea	#5	6'2"		38.59 lbs	
SH=3'9"	S-1	4 ea	#4	4'0 1/4"		10.74 lbs	
	TB-1	4 ea	#5	7'1 1/4"	3'5 3/4"	29.62 lbs	
	U-2	1 ea	#6	5'4"		8.01 lbs	
	V-1	2 ea	#4	3'5"		4.56 lbs	
						95.29 lbs	

7.0x7.5x4.08 Tqr Top Cnr — **HIGHWAY REBAR**

Unit Dims	Bar Mark	Qnty	Size	Length	Dim "A"	Bar Weight	Remarks
H=7'0"	H-1	7 ea	#4	7'2"		33.51 lbs	
W=7'6"	U-1	2 ea	#3	5'0"		3.76 lbs	
S=4'1"	V-2	6 ea	#5	6'8"		41.72 lbs	
SH=3'9"	S-1	4 ea	#4	4'0 1/4"		10.74 lbs	
	TB-1	4 ea	#5	7'1 1/4"	3'5 3/4"	29.62 lbs	
	U-2	1 ea	#6	5'4"		8.01 lbs	
	V-1	2 ea	#4	3'5"		4.56 lbs	
						98.42 lbs	

7.5x7.5x4.08 Tqr Top Cnr — **HIGHWAY REBAR**

Unit Dims	Bar Mark	Qnty	Size	Length	Dim "A"	Bar Weight	Remarks
H=7'6"	H-1	7 ea	#4	7'2"		33.51 lbs	
W=7'6"	U-1	2 ea	#3	5'0"		3.76 lbs	
S=4'1"	V-2	6 ea	#5	7'2"		44.85 lbs	
SH=3'9"	S-1	4 ea	#4	4'0 1/4"		10.74 lbs	
	TB-1	4 ea	#5	7'1 1/4"	3'5 3/4"	29.62 lbs	
	U-2	1 ea	#6	5'4"		8.01 lbs	
	V-1	2 ea	#4	3'5"		4.56 lbs	
						101.55 lbs	

8.0x7.5x4.08 Tqr Top Cnr — **HIGHWAY REBAR**

Unit Dims	Bar Mark	Qnty	Size	Length	Dim "A"	Bar Weight	Remarks
H=8'0"	H-1	8 ea	#4	7'2"		38.30 lbs	
W=7'6"	U-1	2 ea	#3	5'0"		3.76 lbs	
S=4'1"	V-2	6 ea	#6	7'8"		69.09 lbs	
SH=3'9"	S-1	4 ea	#4	4'0 1/4"		10.74 lbs	
	TB-1	4 ea	#6	7'1 1/4"	3'5 3/4"	42.66 lbs	
	U-2	1 ea	#6	5'4"		8.01 lbs	
	V-1	2 ea	#4	3'5"		4.56 lbs	
						138.83 lbs	

8.5x7.5x4.08 Tqr Top Cnr — **HIGHWAY REBAR**

Unit Dims	Bar Mark	Qnty	Size	Length	Dim "A"	Bar Weight	Remarks
H=8'6"	H-1	8 ea	#4	7'2"		38.30 lbs	
W=7'6"	U-1	2 ea	#3	5'0"		3.76 lbs	
S=4'1"	V-2	6 ea	#7	8'2"		100.16 lbs	
SH=3'9"	S-1	4 ea	#4	4'0 1/4"		10.74 lbs	
	TB-1	4 ea	#6	7'1 1/4"	3'5 3/4"	42.66 lbs	
	U-2	1 ea	#6	5'4"		8.01 lbs	
	V-1	2 ea	#4	3'5"		4.56 lbs	
						169.90 lbs	

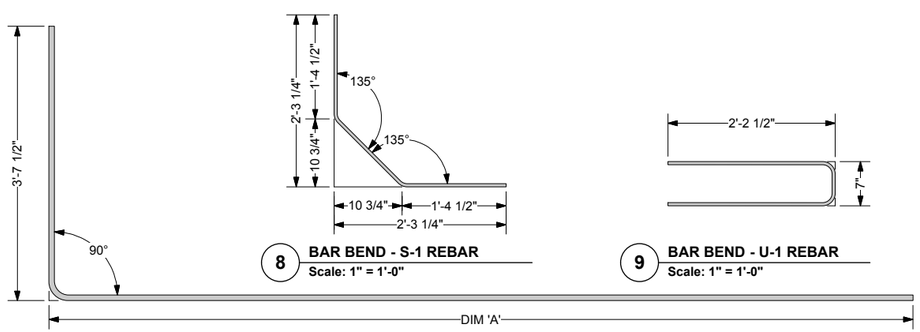

7 BAR BEND - TB-1 REBAR
Scale: 1" = 1'-0"

8 BAR BEND - S-1 REBAR
Scale: 1" = 1'-0"

9 BAR BEND - U-1 REBAR
Scale: 1" = 1'-0"

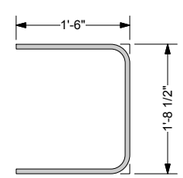

10 BAR BEND - U-2 REBAR
Scale: 1" = 1'-0"

4/13/2017

DESIGNER

THE NEEL COMPANY
8328-D TRAFORD LANE
SPRINGFIELD, VA 22152
PH: (703) 913-7858
FX: (703) 913-7859
Web: www.neelco.com

This drawing contains information proprietary to The Neel Company. The Neel Company is the exclusive licensee of the T-WALL® patent. © 2017, The Neel Company

DATE:	03-23-17
SCALE:	AS NOTED
DESIGNED:	JMC
DRAWN:	CJW
CHECKED:	CCG/KD
TNC JOB #:	TW3634
TNC SHT #63 OF 67	

PA DOT DWG # 87-402 PE (REVISION IV)

COMMONWEALTH OF PENNSYLVANIA
DEPARTMENT OF TRANSPORTATION
BUREAU OF PROJECT DELIVERY

T-WALL® STANDARDS
PREFABRICATED T-WALL® RETAINING WALL SYSTEM

SHOP DRAWINGS
REBAR
THREE QUARTER TOP CORNER UNITS - 4'-1" STEM (II)

SHEET 63 OF 67

87-402 PE

DATE: 03-23-17 TNC JOB #: TW3634 PLOT DATE AND TIME: Wednesday, March 22, 2017 15:51:18 CAD FILE NAME: 062 Rebar - RWY Tqr Top Cnr 4.08 r4-0.vwx

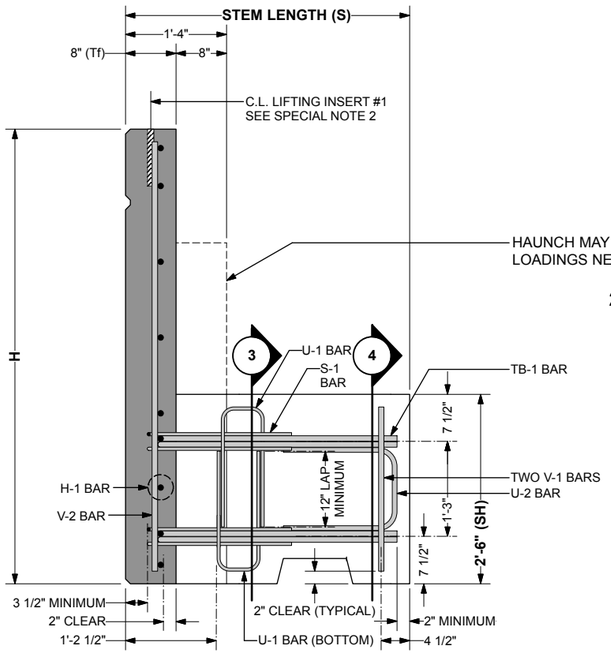

HAUNCH MAY BE EXTENDED ABOVE STEM WHERE PROJECT SPECIFIC LOADINGS NECESSITATE ADDITIONAL MOMENT CAPACITY

2" COVER ON ALL BARS UNLESS OTHERWISE NOTED

1 SIDE VIEW - HALF TOP UNIT (6.0 x 7.5 x 3.75 Hlf Top Cnr SHOWN)
Scale: 1" = 1'-0"

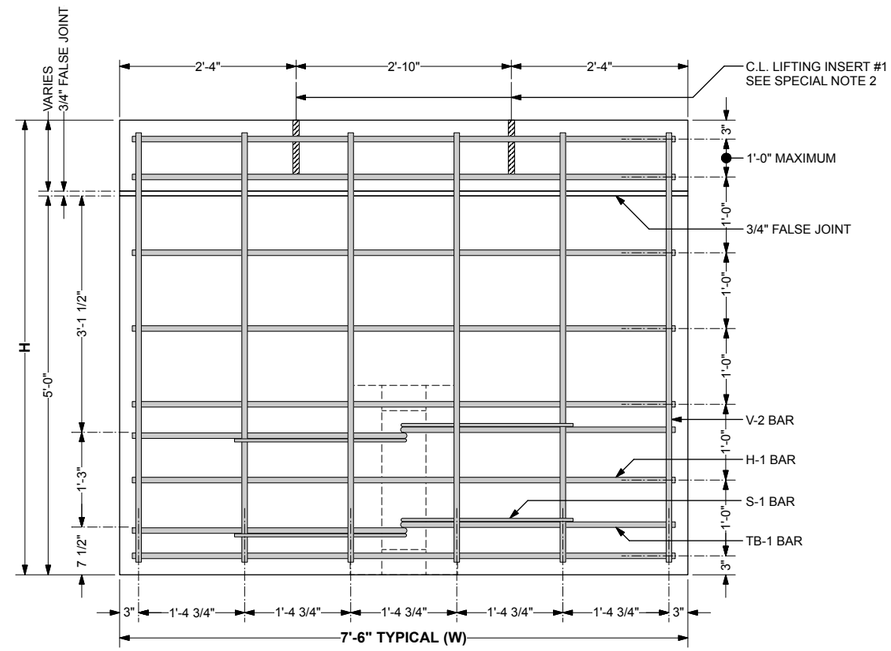

2 FRONT VIEW - HALF TOP UNIT (6.0 x 7.5 x 3.75 Hlf Top Cnr SHOWN)
Scale: 1" = 1'-0"

(U-1 BARS IN STEM OMITTED FOR CLARITY)

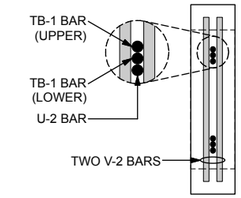

4 SECTION THROUGH STEM
Scale: 1" = 1'-0"

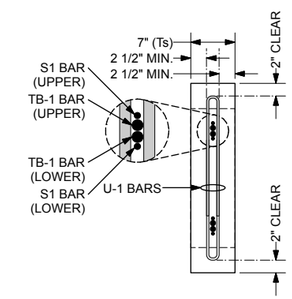

3 SECTION THROUGH STEM
Scale: 1" = 1'-0"

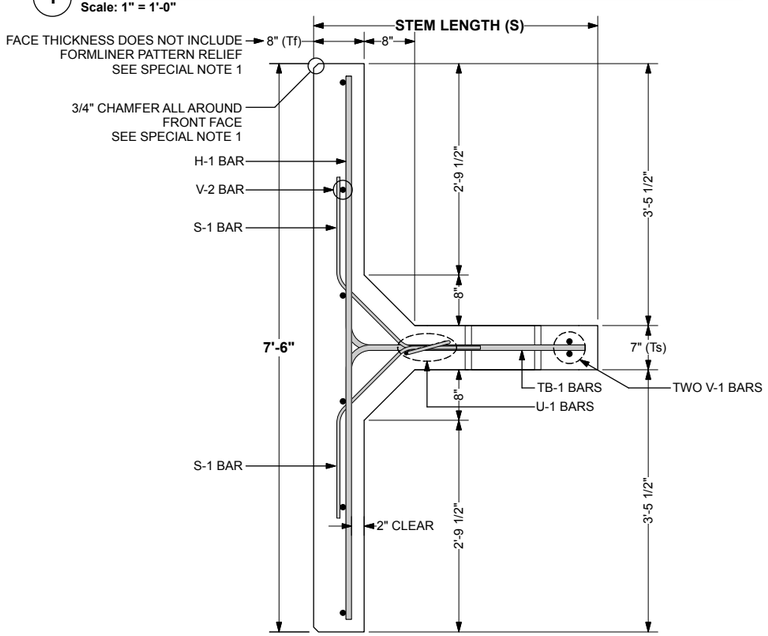

5 PLAN VIEW AT STEM - HALF TOP UNIT (3'-9" STEM SHOWN)
Scale: 1" = 1'-0"

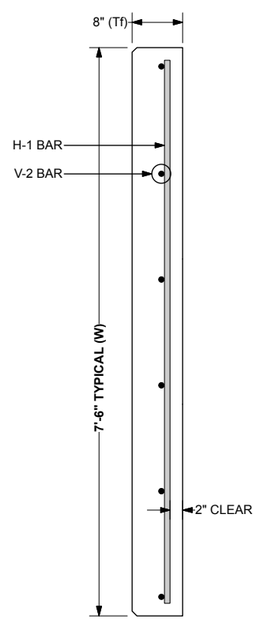

6 PLAN VIEW - EXTENDED FACE PANEL
Scale: 1" = 1'-0"

4/13/2017

DESIGNER	
THE NEEL COMPANY 8328-D TRAFORD LANE SPRINGFIELD, VA 22152 PH: (703) 913-7858 FX: (703) 913-7859 Web: www.neelco.com	DATE: 03-23-17
	SCALE: AS NOTED
	DESIGNED: JMC
	DRAWN: CJW
	CHECKED: CCG/KD
	TNC JOB #: TW3634
	TNC SHT #64 OF 67

This drawing contains information proprietary to The Neel Company. The Neel Company is the exclusive licensee of the T-WALL® patent. © 2017, The Neel Company

PA DOT DWG # 87-402 PE (REVISION IV)

COMMONWEALTH OF PENNSYLVANIA
DEPARTMENT OF TRANSPORTATION
BUREAU OF PROJECT DELIVERY

T-WALL® STANDARDS
PREFABRICATED T-WALL® RETAINING WALL SYSTEM

SHOP DRAWINGS
REBAR
HALF TOP CORNER UNITS - 3'-9" STEM (I)

SHEET 64 OF 67

87-402 PE

DATE: 03-23-17 TNC JOB #: TW3634 PLOT DATE AND TIME: Wednesday, March 22, 2017 15:51:09 CAD FILE NAME: 064 Rebar - RWY Hlf Top Cnr 3.42 r4-0.vwx

T-WALL UNIT PROPERTIES

UNIT TYPE	H	W	S	Tf*	SH	VOLUME*	WEIGHT*
3.0x7.5x3.75 Hlf Top Cnr	3'0"	7'6"	3'9"	8"	2'6"	0.75 cy	3,045 lbs
3.5x7.5x3.75 Hlf Top Cnr	3'6"	7'6"	3'9"	8"	2'6"	0.84 cy	3,420 lbs
4.0x7.5x3.75 Hlf Top Cnr	4'0"	7'6"	3'9"	8"	2'6"	0.94 cy	3,795 lbs
4.5x7.5x3.75 Hlf Top Cnr	4'6"	7'6"	3'9"	8"	2'6"	1.03 cy	4,170 lbs
5.0x7.5x3.75 Hlf Top Cnr	5'0"	7'6"	3'9"	8"	2'6"	1.12 cy	4,545 lbs
5.5x7.5x3.75 Hlf Top Cnr	5'6"	7'6"	3'9"	8"	2'6"	1.21 cy	4,920 lbs
6.0x7.5x3.75 Hlf Top Cnr	6'0"	7'6"	3'9"	8"	2'6"	1.31 cy	5,295 lbs
6.5x7.5x3.75 Hlf Top Cnr	6'6"	7'6"	3'9"	8"	2'6"	1.40 cy	5,670 lbs
7.0x7.5x3.75 Hlf Top Cnr	7'0"	7'6"	3'9"	8"	2'6"	1.49 cy	6,045 lbs
7.5x7.5x3.75 Hlf Top Cnr	7'6"	7'6"	3'9"	8"	2'6"	1.59 cy	6,420 lbs

*** VOLUMES AND WEIGHTS ON THIS TABLE ARE BASED ON 8" FACE THICKNESS (Tf)**
FORMLINER FINISHES MAY INCREASE FACE THICKNESS, VOLUME AND WEIGHT.

LIFTING INSERT DATA

UNIT TYPE	DISTANCE TO CENTROID FROM FRONT FACE	DISTANCE TO INSERT #1 FROM FRONT FACE	DISTANCE TO INSERT #2 FROM FRONT FACE
3.0x7.5x3.75 Hlf Top Cnr	8 7/8"	4"	N/A
3.5x7.5x3.75 Hlf Top Cnr	8 3/8"	4"	N/A
4.0x7.5x3.75 Hlf Top Cnr	8"	4"	N/A
4.5x7.5x3.75 Hlf Top Cnr	7 3/4"	4"	N/A
5.0x7.5x3.75 Hlf Top Cnr	7 1/2"	4"	N/A
5.5x7.5x3.75 Hlf Top Cnr	7 1/4"	4"	N/A
6.0x7.5x3.75 Hlf Top Cnr	7 1/8"	4"	N/A
6.5x7.5x3.75 Hlf Top Cnr	7"	4"	N/A
7.0x7.5x3.75 Hlf Top Cnr	6 3/4"	4"	N/A
7.5x7.5x3.75 Hlf Top Cnr	6 3/4"	4"	N/A

SPECIAL NOTES:

1. FRONT FACE OF T-WALL® UNITS FINISH TREATMENT:
   - PER CONTRACT DRAWINGS AND SPECS.
   - MINIMUM FRONT FACE THICKNESS SHALL BE 8"
2. LIFTING INSERTS:
   - MEADOW BURKE RAPID LIFT RL-22 LIFTING INSERT WITH RL-32 REBAR OR DAYTON SUPERIOR P-53 5-TON SWIFT LIFT EYE WITH P-60 TENSION BAR.
   - 8000 LBS (4 TONS) MINIMUM RATED WORKING LOAD CAPACITY.
   - REFER TO LIFTING INSERT DATA TABLE FOR INSERT LOCATIONS.
   - LIFTING INSERTS TO BE GALVANIZED.

GENERAL NOTES:

1. PRIMARY REFERENCE: AASHTO LRFD BRIDGE SPECIFICATIONS, 5th EDITION, 2010 WITH INTERIM REVISIONS
2. MINIMUM CONCRETE COVER IS DESIGNED FOR 2" ON ALL BARS. TOLERANCES PER CONSTRUCTION SPECIFICATIONS SECTION 2.0.
3. ALL MATERIAL AND TOLERANCES IN ACCORDS TO T-WALL® CONSTRUCTION SPECIFICATIONS, SECTION 2.0 MATERIALS.
4. REBAR:
   - SEE CONSTRUCTION SPECIFICATION, SECTION 2.0 MATERIALS OR PER CONTRACT DRAWINGS AND SPECS.
5. CONCRETE:
   - F'c = 5000 psi @ 28 DAYS

REBAR SCHEDULES

3.0x7.5x3.75 Hlf Top Cnr — **REBAR SCHEDULES**

Unit Dims	Bar Mark	Qnty	Size	Length	Dim "A"	Bar Weight	Remarks
H=3'0"	H-1	4 ea	#4	7'2"		19.15 lbs	
W=7'6"	U-1	2 ea	#3	3'9"		2.82 lbs	
S=3'9"	V-2	6 ea	#5	2'8"		16.69 lbs	
SH=2'6"	S-1	4 ea	#4	4'0 1/4"		10.74 lbs	
	TB-1	4 ea	#4	6'9 1/4"	3'1 3/4"	18.09 lbs	
	U-2	1 ea	#6	4'1"		6.13 lbs	
	V-1	2 ea	#4	2'2"		2.89 lbs	
						76.52 lbs	

3.5x7.5x3.75 Hlf Top Cnr — **REBAR SCHEDULES**

Unit Dims	Bar Mark	Qnty	Size	Length	Dim "A"	Bar Weight	Remarks
H=3'6"	H-1	4 ea	#4	7'2"		19.15 lbs	
W=7'6"	U-1	2 ea	#3	3'9"		2.82 lbs	
S=3'9"	V-2	6 ea	#5	3'2"		19.82 lbs	
SH=2'6"	S-1	4 ea	#4	4'0 1/4"		10.74 lbs	
	TB-1	4 ea	#4	6'9 1/4"	3'1 3/4"	18.09 lbs	
	U-2	1 ea	#6	4'1"		6.13 lbs	
	V-1	2 ea	#4	2'2"		2.89 lbs	
						79.65 lbs	

4.0x7.5x3.75 Hlf Top Cnr — **REBAR SCHEDULES**

Unit Dims	Bar Mark	Qnty	Size	Length	Dim "A"	Bar Weight	Remarks
H=4'0"	H-1	5 ea	#4	7'2"		23.94 lbs	
W=7'6"	U-1	2 ea	#3	3'9"		2.82 lbs	
S=3'9"	V-2	6 ea	#5	3'8"		22.95 lbs	
SH=2'6"	S-1	4 ea	#4	4'0 1/4"		10.74 lbs	
	TB-1	4 ea	#4	6'9 1/4"	3'1 3/4"	18.09 lbs	
	U-2	1 ea	#6	4'1"		6.13 lbs	
	V-1	2 ea	#4	2'2"		2.89 lbs	
						87.57 lbs	

4.5x7.5x3.75 Hlf Top Cnr — **REBAR SCHEDULES**

Unit Dims	Bar Mark	Qnty	Size	Length	Dim "A"	Bar Weight	Remarks
H=4'6"	H-1	5 ea	#4	7'2"		23.94 lbs	
W=7'6"	U-1	2 ea	#3	3'9"		2.82 lbs	
S=3'9"	V-2	6 ea	#5	4'2"		26.08 lbs	
SH=2'6"	S-1	4 ea	#4	4'0 1/4"		10.74 lbs	
	TB-1	4 ea	#4	6'9 1/4"	3'1 3/4"	18.09 lbs	
	U-2	1 ea	#6	4'1"		6.13 lbs	
	V-1	2 ea	#4	2'2"		2.89 lbs	
						90.69 lbs	

5.0x7.5x3.75 Hlf Top Cnr — **REBAR SCHEDULES**

Unit Dims	Bar Mark	Qnty	Size	Length	Dim "A"	Bar Weight	Remarks
H=5'0"	H-1	6 ea	#4	7'2"		28.72 lbs	
W=7'6"	U-1	2 ea	#3	3'9"		2.82 lbs	
S=3'9"	V-2	6 ea	#5	4'8"		29.20 lbs	
SH=2'6"	S-1	4 ea	#4	4'0 1/4"		10.74 lbs	
	TB-1	4 ea	#4	6'9 1/4"	3'1 3/4"	18.09 lbs	
	U-2	1 ea	#6	4'1"		6.13 lbs	
	V-1	2 ea	#4	2'2"		2.89 lbs	
						98.61 lbs	

REBAR SCHEDULES

5.5x7.5x3.75 Hlf Top Cnr — **REBAR SCHEDULES**

Unit Dims	Bar Mark	Qnty	Size	Length	Dim "A"	Bar Weight	Remarks
H=5'6"	H-1	6 ea	#4	7'2"		28.72 lbs	
W=7'6"	U-1	2 ea	#3	3'9"		2.82 lbs	
S=3'9"	V-2	6 ea	#5	5'2"		32.33 lbs	
SH=2'6"	S-1	4 ea	#4	4'0 1/4"		10.74 lbs	
	TB-1	4 ea	#5	6'9 1/4"	3'1 3/4"	28.25 lbs	
	U-2	1 ea	#6	4'1"		6.13 lbs	
	V-1	2 ea	#4	2'2"		2.89 lbs	
						111.90 lbs	

6.0x7.5x3.75 Hlf Top Cnr — **REBAR SCHEDULES**

Unit Dims	Bar Mark	Qnty	Size	Length	Dim "A"	Bar Weight	Remarks
H=6'0"	H-1	7 ea	#4	7'2"		33.51 lbs	
W=7'6"	U-1	2 ea	#3	3'9"		2.82 lbs	
S=3'9"	V-2	6 ea	#5	5'8"		35.46 lbs	
SH=2'6"	S-1	4 ea	#4	4'0 1/4"		10.74 lbs	
	TB-1	4 ea	#5	6'9 1/4"	3'1 3/4"	28.25 lbs	
	U-2	1 ea	#6	4'1"		6.13 lbs	
	V-1	2 ea	#4	2'2"		2.89 lbs	
						119.81 lbs	

6.5x7.5x3.75 Hlf Top Cnr — **REBAR SCHEDULES**

Unit Dims	Bar Mark	Qnty	Size	Length	Dim "A"	Bar Weight	Remarks
H=6'6"	H-1	7 ea	#4	7'2"		33.51 lbs	
W=7'6"	U-1	2 ea	#3	3'9"		2.82 lbs	
S=3'9"	V-2	6 ea	#6	6'2"		55.57 lbs	
SH=2'6"	S-1	4 ea	#4	4'0 1/4"		10.74 lbs	
	TB-1	4 ea	#6	6'9 1/4"	3'1 3/4"	40.68 lbs	
	U-2	1 ea	#6	4'1"		6.13 lbs	
	V-1	2 ea	#4	2'2"		2.89 lbs	
						152.36 lbs	

7.0x7.5x3.75 Hlf Top Cnr — **REBAR SCHEDULES**

Unit Dims	Bar Mark	Qnty	Size	Length	Dim "A"	Bar Weight	Remarks
H=7'0"	H-1	8 ea	#4	7'2"		38.30 lbs	
W=7'6"	U-1	2 ea	#3	3'9"		2.82 lbs	
S=3'9"	V-2	6 ea	#6	6'8"		60.08 lbs	
SH=2'6"	S-1	4 ea	#4	4'0 1/4"		10.74 lbs	
	TB-1	4 ea	#6	6'9 1/4"	3'1 3/4"	40.68 lbs	
	U-2	1 ea	#6	4'1"		6.13 lbs	
	V-1	2 ea	#4	2'2"		2.89 lbs	
						161.65 lbs	

7.5x7.5x3.75 Hlf Top Cnr — **REBAR SCHEDULES**

Unit Dims	Bar Mark	Qnty	Size	Length	Dim "A"	Bar Weight	Remarks
H=7'6"	H-1	8 ea	#4	7'2"		38.30 lbs	
W=7'6"	U-1	2 ea	#3	3'9"		2.82 lbs	
S=3'9"	V-2	6 ea	#7	7'2"		87.89 lbs	
SH=2'6"	S-1	4 ea	#4	4'0 1/4"		10.74 lbs	
	TB-1	4 ea	#7	6'9 1/4"	3'1 3/4"	55.36 lbs	
	U-2	1 ea	#6	4'1"		6.13 lbs	
	V-1	2 ea	#4	2'2"		2.89 lbs	
						204.14 lbs	

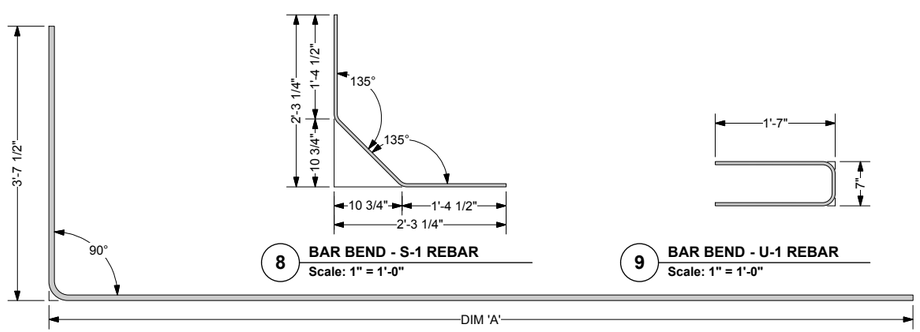

7 BAR BEND - TB-1 REBAR
Scale: 1" = 1'-0"

8 BAR BEND - S-1 REBAR
Scale: 1" = 1'-0"

9 BAR BEND - U-1 REBAR
Scale: 1" = 1'-0"

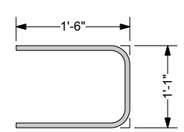

10 BAR BEND - U-2 REBAR
Scale: 1" = 1'-0"

4/13/2017

DESIGNER

THE NEEL COMPANY
8328-D TRAFORD LANE
SPRINGFIELD, VA 22152
PH: (703) 913-7858
FX: (703) 913-7859
Web: www.neelco.com

This drawing contains information proprietary to The Neel Company. The Neel Company is the exclusive licensee of the T-WALL® patent. © 2017, The Neel Company

DATE:	03-23-17
SCALE:	AS NOTED
DESIGNED:	JMC
DRAWN:	CJW
CHECKED:	CCG/KD
TNC JOB #:	TW3634
TNC SHT #:	65 OF 67

PA DOT DWG # 87-402 PE (REVISION IV)

COMMONWEALTH OF PENNSYLVANIA
DEPARTMENT OF TRANSPORTATION
BUREAU OF PROJECT DELIVERY

T-WALL® STANDARDS
PREFABRICATED T-WALL® RETAINING WALL SYSTEM

SHOP DRAWINGS
REBAR
HALF TOP CORNER UNITS - 3'-9" STEM (II)

SHEET 65 OF 67

87-402 PE

DATE: 03-23-17 TNC JOB #: TW3634 PLOT DATE AND TIME: Wednesday, March 22, 2017 15:51:09 CAD FILE NAME: 064 Rebar - RWY Hlf Top Cnr 3.42 r4-0.vwx

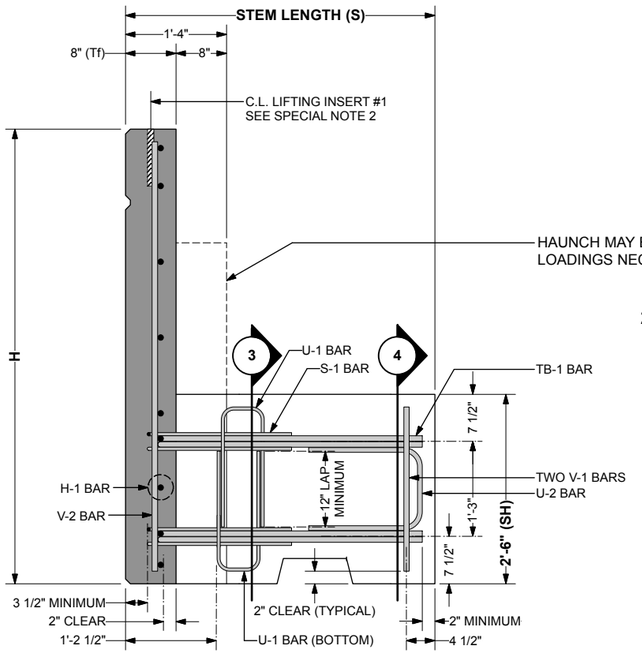

2" COVER ON ALL BARS UNLESS OTHERWISE NOTED

1 **SIDE VIEW - HALF TOP UNIT (6.0 x 7.5 x 4.08 Hlf Top Cnr SHOWN)**
Scale: 1" = 1'-0"

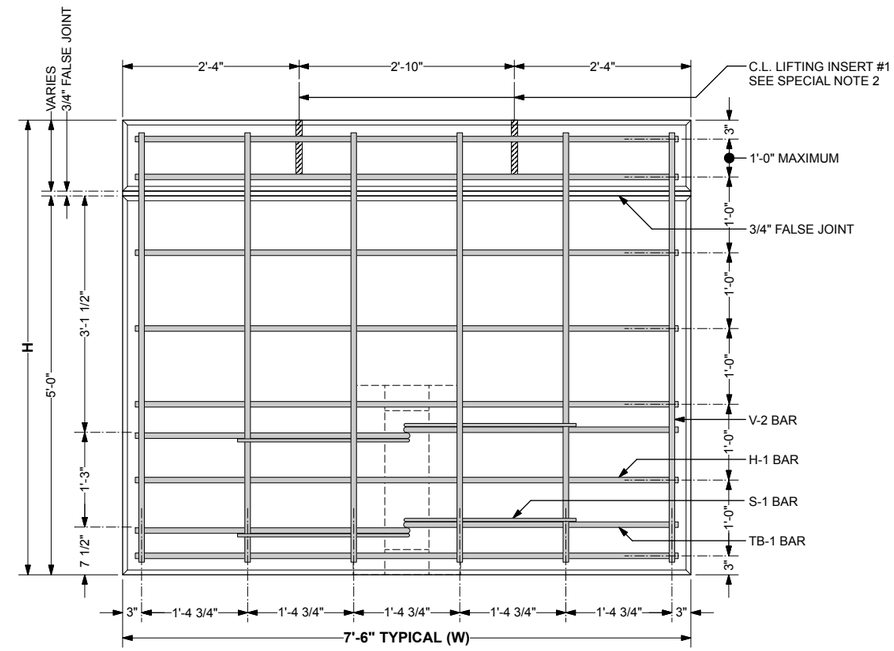

2 **FRONT VIEW - HALF TOP UNIT (6.0 x 7.5 x 4.08 Hlf Top Cnr SHOWN)**
Scale: 1" = 1'-0"
(U-1 BARS IN STEM OMITTED FOR CLARITY)

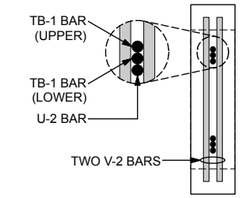

4 **SECTION THROUGH STEM**
Scale: 1" = 1'-0"

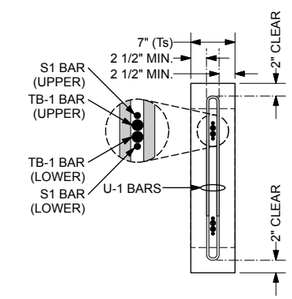

3 **SECTION THROUGH STEM**
Scale: 1" = 1'-0"

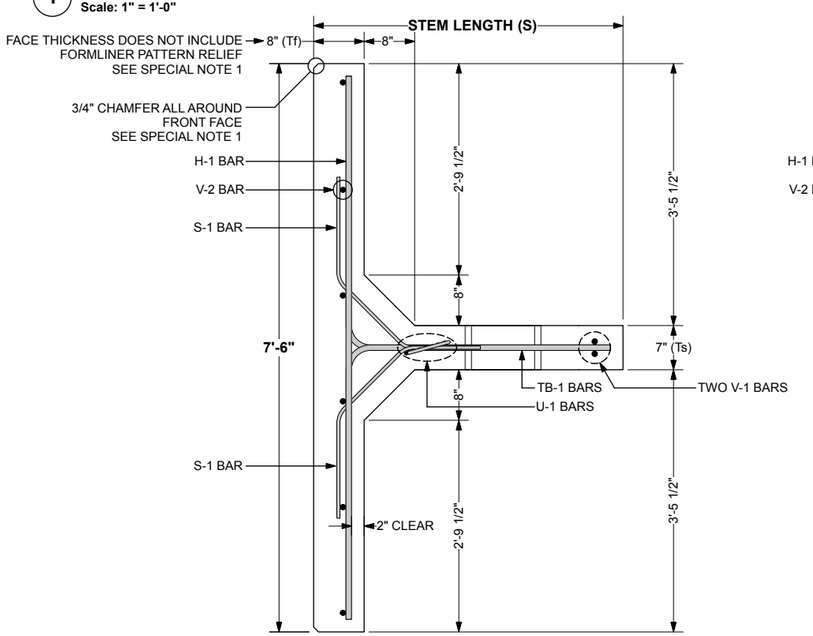

5 **PLAN VIEW AT STEM - HALF TOP UNIT (4'-1" STEM SHOWN)**
Scale: 1" = 1'-0"

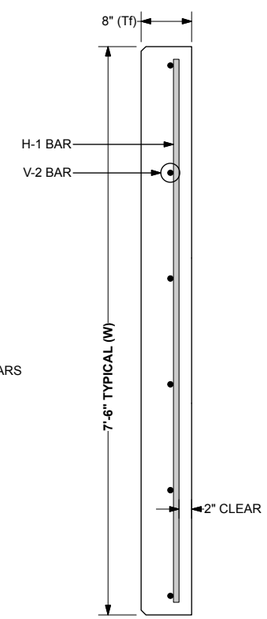

6 **PLAN VIEW - EXTENDED FACE PANEL**
Scale: 1" = 1'-0"

4/13/2017

DESIGNER	
THE NEEL COMPANY 8328-D TRAFORD LANE SPRINGFIELD, VA 22152 PH: (703) 913-7858 FX: (703) 913-7859 Web: www.neelco.com	DATE: 03-23-17
	SCALE: AS NOTED
	DESIGNED: JMC
	DRAWN: CJW
	CHECKED: CCG/KD
	TNC JOB #: TW3634
	TNC SHT #66 OF 67

This drawing contains information proprietary to The Neel Company. The Neel Company is the exclusive licensee of the T-WALL® patent. © 2017, The Neel Company

PA DOT DWG # 87-402 PE (REVISION IV)

COMMONWEALTH OF PENNSYLVANIA
DEPARTMENT OF TRANSPORTATION
BUREAU OF PROJECT DELIVERY

T-WALL® STANDARDS
PREFABRICATED T-WALL® RETAINING WALL SYSTEM

SHOP DRAWINGS
REBAR
HALF TOP CORNER UNITS - 4'-1" STEM (I)

DATE: 03-23-17 TNC JOB #: TW3634 PLOT DATE AND TIME: Wednesday, March 22, 2017 15:51:02 CAD FILE NAME: 066 Rebar - RWY Hlf Top Cnr 4.08 r4-0.vwx

T-WALL UNIT PROPERTIES

UNIT TYPE	H	W	S	Tf*	SH	VOLUME*	WEIGHT*
3.0x7.5x4.08 Hlf Top Cnr	3'0"	7'6"	4'1"	8"	2'6"	0.77 cy	3,108 lbs
3.5x7.5x4.08 Hlf Top Cnr	3'6"	7'6"	4'1"	8"	2'6"	0.86 cy	3,483 lbs
4.0x7.5x4.08 Hlf Top Cnr	4'0"	7'6"	4'1"	8"	2'6"	0.95 cy	3,858 lbs
4.5x7.5x4.08 Hlf Top Cnr	4'6"	7'6"	4'1"	8"	2'6"	1.05 cy	4,233 lbs
5.0x7.5x4.08 Hlf Top Cnr	5'0"	7'6"	4'1"	8"	2'6"	1.14 cy	4,608 lbs
5.5x7.5x4.08 Hlf Top Cnr	5'6"	7'6"	4'1"	8"	2'6"	1.23 cy	4,983 lbs
6.0x7.5x4.08 Hlf Top Cnr	6'0"	7'6"	4'1"	8"	2'6"	1.32 cy	5,358 lbs
6.5x7.5x4.08 Hlf Top Cnr	6'6"	7'6"	4'1"	8"	2'6"	1.42 cy	5,733 lbs
7.0x7.5x4.08 Hlf Top Cnr	7'0"	7'6"	4'1"	8"	2'6"	1.51 cy	6,108 lbs
7.5x7.5x4.08 Hlf Top Cnr	7'6"	7'6"	4'1"	8"	2'6"	1.60 cy	6,483 lbs

*** VOLUMES AND WEIGHTS ON THIS TABLE ARE BASED ON 8" FACE THICKNESS (Tf)**
FORMLINER FINISHES MAY INCREASE FACE THICKNESS, VOLUME AND WEIGHT.

LIFTING INSERT DATA

UNIT TYPE	DISTANCE TO CENTROID FROM FRONT FACE	DISTANCE TO INSERT #1 FROM FRONT FACE	DISTANCE TO INSERT #2 FROM FRONT FACE
3.0x7.5x4.08 Hlf Top Cnr	9 5/8"	4"	N/A
3.5x7.5x4.08 Hlf Top Cnr	9 1/8"	4"	N/A
4.0x7.5x4.08 Hlf Top Cnr	8 5/8"	4"	N/A
4.5x7.5x4.08 Hlf Top Cnr	8 1/4"	4"	N/A
5.0x7.5x4.08 Hlf Top Cnr	8"	4"	N/A
5.5x7.5x4.08 Hlf Top Cnr	7 3/4"	4"	N/A
6.0x7.5x4.08 Hlf Top Cnr	7 1/2"	4"	N/A
6.5x7.5x4.08 Hlf Top Cnr	7 3/8"	4"	N/A
7.0x7.5x4.08 Hlf Top Cnr	7 1/4"	4"	N/A
7.5x7.5x4.08 Hlf Top Cnr	7"	4"	N/A

SPECIAL NOTES:

1. FRONT FACE OF T-WALL® UNITS FINISH TREATMENT:
   - PER CONTRACT DRAWINGS AND SPECS.
   - MINIMUM FRONT FACE THICKNESS SHALL BE 8"
2. LIFTING INSERTS:
   - MEADOW BURKE RAPID LIFT RL-22 LIFTING INSERT WITH RL-32 REBAR OR DAYTON SUPERIOR P-53 5-TON SWIFT LIFT EYE WITH P-60 TENSION BAR.
   - 8000 LBS (4 TONS) MINIMUM RATED WORKING LOAD CAPACITY.
   - REFER TO LIFTING INSERT DATA TABLE FOR INSERT LOCATIONS.
   - LIFTING INSERTS TO BE GALVANIZED.

GENERAL NOTES:

1. PRIMARY REFERENCE: AASHTO LRFD BRIDGE SPECIFICATIONS, 5th EDITION, 2010 WITH INTERIM REVISIONS
2. MINIMUM CONCRETE COVER IS DESIGNED FOR 2" ON ALL BARS. TOLERANCES PER CONSTRUCTION SPECIFICATIONS SECTION 2.0.
3. ALL MATERIAL AND TOLERANCES IN ACCORDS TO T-WALL® CONSTRUCTION SPECIFICATIONS, SECTION 2.0 MATERIALS.
4. REBAR:
   - SEE CONSTRUCTION SPECIFICATION, SECTION 2.0 MATERIALS OR PER CONTRACT DRAWINGS AND SPECS.
5. CONCRETE:
   - F'c = 5000 psi @ 28 DAYS

REBAR SCHEDULES

3.0x7.5x4.08 Hlf Top Cnr — REBAR SCHEDULES

Unit Dims	Bar Mark	Qnty	Size	Length	Dim "A"	Bar Weight	Remarks
H=3'0"	H-1	4 ea	#4	7'2"		19.15 lbs	
W=7'6"	U-1	2 ea	#3	3'9"		2.82 lbs	
S=4'1"	V-2	6 ea	#5	2'8"		16.69 lbs	
SH=2'6"	S-1	4 ea	#4	4'0 1/4"		10.74 lbs	
	TB-1	4 ea	#4	7'1 1/4"	3'5 3/4"	18.97 lbs	
	U-2	1 ea	#6	4'1"		6.13 lbs	
	V-1	2 ea	#4	2'2"		2.89 lbs	
						77.40 lbs	

3.5x7.5x4.08 Hlf Top Cnr — REBAR SCHEDULES

Unit Dims	Bar Mark	Qnty	Size	Length	Dim "A"	Bar Weight	Remarks
H=3'6"	H-1	4 ea	#4	7'2"		19.15 lbs	
W=7'6"	U-1	2 ea	#3	3'9"		2.82 lbs	
S=4'1"	V-2	6 ea	#5	3'2"		19.82 lbs	
SH=2'6"	S-1	4 ea	#4	4'0 1/4"		10.74 lbs	
	TB-1	4 ea	#4	7'1 1/4"	3'5 3/4"	18.97 lbs	
	U-2	1 ea	#6	4'1"		6.13 lbs	
	V-1	2 ea	#4	2'2"		2.89 lbs	
						80.53 lbs	

4.0x7.5x4.08 Hlf Top Cnr — REBAR SCHEDULES

Unit Dims	Bar Mark	Qnty	Size	Length	Dim "A"	Bar Weight	Remarks
H=4'0"	H-1	5 ea	#4	7'2"		23.94 lbs	
W=7'6"	U-1	2 ea	#3	3'9"		2.82 lbs	
S=4'1"	V-2	6 ea	#5	3'8"		22.95 lbs	
SH=2'6"	S-1	4 ea	#4	4'0 1/4"		10.74 lbs	
	TB-1	4 ea	#4	7'1 1/4"	3'5 3/4"	18.97 lbs	
	U-2	1 ea	#6	4'1"		6.13 lbs	
	V-1	2 ea	#4	2'2"		2.89 lbs	
						88.45 lbs	

4.5x7.5x4.08 Hlf Top Cnr — REBAR SCHEDULES

Unit Dims	Bar Mark	Qnty	Size	Length	Dim "A"	Bar Weight	Remarks
H=4'6"	H-1	5 ea	#4	7'2"		23.94 lbs	
W=7'6"	U-1	2 ea	#3	3'9"		2.82 lbs	
S=4'1"	V-2	6 ea	#5	4'2"		26.08 lbs	
SH=2'6"	S-1	4 ea	#4	4'0 1/4"		10.74 lbs	
	TB-1	4 ea	#4	7'1 1/4"	3'5 3/4"	18.97 lbs	
	U-2	1 ea	#6	4'1"		6.13 lbs	
	V-1	2 ea	#4	2'2"		2.89 lbs	
						91.58 lbs	

5.0x7.5x4.08 Hlf Top Cnr — REBAR SCHEDULES

Unit Dims	Bar Mark	Qnty	Size	Length	Dim "A"	Bar Weight	Remarks
H=5'0"	H-1	6 ea	#4	7'2"		28.72 lbs	
W=7'6"	U-1	2 ea	#3	3'9"		2.82 lbs	
S=4'1"	V-2	6 ea	#5	4'8"		29.20 lbs	
SH=2'6"	S-1	4 ea	#4	4'0 1/4"		10.74 lbs	
	TB-1	4 ea	#4	7'1 1/4"	3'5 3/4"	18.97 lbs	
	U-2	1 ea	#6	4'1"		6.13 lbs	
	V-1	2 ea	#4	2'2"		2.89 lbs	
						99.49 lbs	

REBAR SCHEDULES

5.5x7.5x4.08 Hlf Top Cnr — REBAR SCHEDULES

Unit Dims	Bar Mark	Qnty	Size	Length	Dim "A"	Bar Weight	Remarks
H=5'6"	H-1	6 ea	#4	7'2"		28.72 lbs	
W=7'6"	U-1	2 ea	#3	3'9"		2.82 lbs	
S=4'1"	V-2	6 ea	#5	5'2"		32.33 lbs	
SH=2'6"	S-1	4 ea	#4	4'0 1/4"		10.74 lbs	
	TB-1	4 ea	#5	7'1 1/4"	3'5 3/4"	29.62 lbs	
	U-2	1 ea	#6	4'1"		6.13 lbs	
	V-1	2 ea	#4	2'2"		2.89 lbs	
						113.27 lbs	

6.0x7.5x4.08 Hlf Top Cnr — REBAR SCHEDULES

Unit Dims	Bar Mark	Qnty	Size	Length	Dim "A"	Bar Weight	Remarks
H=6'0"	H-1	7 ea	#4	7'2"		33.51 lbs	
W=7'6"	U-1	2 ea	#3	3'9"		2.82 lbs	
S=4'1"	V-2	6 ea	#5	5'8"		35.46 lbs	
SH=2'6"	S-1	4 ea	#4	4'0 1/4"		10.74 lbs	
	TB-1	4 ea	#5	7'1 1/4"	3'5 3/4"	29.62 lbs	
	U-2	1 ea	#6	4'1"		6.13 lbs	
	V-1	2 ea	#4	2'2"		2.89 lbs	
						121.19 lbs	

6.5x7.5x4.08 Hlf Top Cnr — REBAR SCHEDULES

Unit Dims	Bar Mark	Qnty	Size	Length	Dim "A"	Bar Weight	Remarks
H=6'6"	H-1	7 ea	#4	7'2"		33.51 lbs	
W=7'6"	U-1	2 ea	#3	3'9"		2.82 lbs	
S=4'1"	V-2	6 ea	#6	6'2"		55.57 lbs	
SH=2'6"	S-1	4 ea	#4	4'0 1/4"		10.74 lbs	
	TB-1	4 ea	#6	7'1 1/4"	3'5 3/4"	42.66 lbs	
	U-2	1 ea	#6	4'1"		6.13 lbs	
	V-1	2 ea	#4	2'2"		2.89 lbs	
						154.34 lbs	

7.0x7.5x4.08 Hlf Top Cnr — REBAR SCHEDULES

Unit Dims	Bar Mark	Qnty	Size	Length	Dim "A"	Bar Weight	Remarks
H=7'0"	H-1	8 ea	#4	7'2"		38.30 lbs	
W=7'6"	U-1	2 ea	#3	3'9"		2.82 lbs	
S=4'1"	V-2	6 ea	#6	6'8"		60.08 lbs	
SH=2'6"	S-1	4 ea	#4	4'0 1/4"		10.74 lbs	
	TB-1	4 ea	#6	7'1 1/4"	3'5 3/4"	42.66 lbs	
	U-2	1 ea	#6	4'1"		6.13 lbs	
	V-1	2 ea	#4	2'2"		2.89 lbs	
						163.63 lbs	

7.5x7.5x4.08 Hlf Top Cnr — REBAR SCHEDULES

Unit Dims	Bar Mark	Qnty	Size	Length	Dim "A"	Bar Weight	Remarks
H=7'6"	H-1	8 ea	#4	7'2"		38.30 lbs	
W=7'6"	U-1	2 ea	#3	3'9"		2.82 lbs	
S=4'1"	V-2	6 ea	#7	7'2"		87.89 lbs	
SH=2'6"	S-1	4 ea	#4	4'0 1/4"		10.74 lbs	
	TB-1	4 ea	#7	7'1 1/4"	3'5 3/4"	58.06 lbs	
	U-2	1 ea	#6	4'1"		6.13 lbs	
	V-1	2 ea	#4	2'2"		2.89 lbs	
						206.84 lbs	

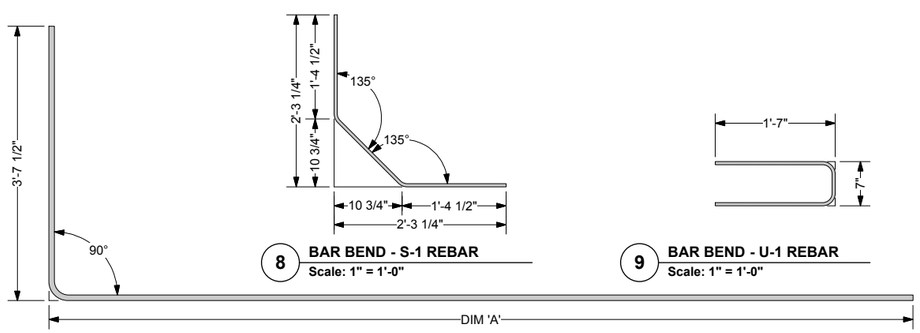

7 BAR BEND - TB-1 REBAR
Scale: 1" = 1'-0"

8 BAR BEND - S-1 REBAR
Scale: 1" = 1'-0"

9 BAR BEND - U-1 REBAR
Scale: 1" = 1'-0"

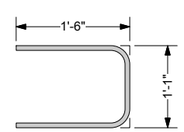

10 BAR BEND - U-2 REBAR
Scale: 1" = 1'-0"

4/13/2017

PA DOT DWG # 87-402 PE (REVISION IV)

COMMONWEALTH OF PENNSYLVANIA
DEPARTMENT OF TRANSPORTATION
BUREAU OF PROJECT DELIVERY

T-WALL® STANDARDS
PREFABRICATED T-WALL® RETAINING WALL SYSTEM

SHOP DRAWINGS
REBAR
HALF TOP CORNER UNITS - 4'-1" STEM (II)

DESIGNER
THE NEEL COMPANY
8328-D TRAFORD LANE
SPRINGFIELD, VA 22152
PH: (703) 913-7858
FX: (703) 913-7859
Web: www.neelco.com

This drawing contains information proprietary to The Neel Company. The Neel Company is the exclusive licensee of the T-WALL® patent. © 2017, The Neel Company

DATE: 03-23-17
SCALE: AS NOTED
DESIGNED: JMC
DRAWN: CJW
CHECKED: CCG/KD
TNC JOB #: TW3634
TNC SHT #67 OF 67

SHEET 67 OF 67

87-402 PE

DATE: 03-23-17 TNC JOB #: TW3634 PLOT DATE AND TIME: Wednesday, March 22, 2017 15:51:02 CAD FILE NAME: 066 Rebar - RWY Hlf Top Cnr 4.08 r4-0.vwx

Product:

Item 9000-7101 – SINE WALL MSE Panel System
SINE WALL, LLC
PennDOT Drawing # 2015-110

Approval Date:	**Initiated By SOL:**
September 21, 2017	483-17-4

Application/Use:

SINE WALL MSE Panel System developed by SINE WALL, LLC has been approved for use as an "Alternate" retaining wall. The use as an "Alternate" retaining wall is at the discretion of the District Executive.

SINE WALL MSE Panel System is a patented product. Its patent number is 7,270,502.

SINE WALL MSE Panel System's usage has the following restrictions:

Maximum Wall Height:

- 30 feet for level backfill with traffic.

This wall system meets both AASHTO and Design Manual, Part 4 design criteria.

Specifications:

Design/Material/Construction Specifications for this retaining wall system are specified on PennDOT Drawing # 2015-110, dated September 21, 2017, of SINE WALL MSE Panel System details for your use.

Comments:

On those projects permitting the use of this system as an alternate, a special provision should be included in the proposal to indicate that the "SINE WALL MSE Panel System" as an alternate is allowed.
The contractor will be required to revise the pertinent contract drawings as per DM-4, PP 1.10 to show the usage of "SINE WALL MSE Panel System" and will also be required to reimburse the Department a fee of $1,000 per design for the review and approval of the revision. This should be specified in the contract's Special Provisions.

SINE WALL®

Proven Panels. Smarter Steel.

STANDARD DRAWINGS FOR MECHANICALLY STABILIZED EARTH RETAINING WALLS SINE WALL® MSE PANEL SYSTEM COMMONWEALTH OF PENNSYLVANIA DEPARTMENT OF TRANSPORTATION

MSE WALL SHEET INDEX		
SHEET NO.	SHEET TITLE	REVISION
1	INDEX SHEET	
2	GENERAL NOTES	
3	STANDARD 5 x 10 PANEL DETAILS	
4	STANDARD 5 x 10 PANEL DETAILS (WWF ALTERNATIVE)	
5	STANDARD 5 x 5 PANEL DETAILS	
6	STANDARD 5 x 5 PANEL DETAILS (WWF ALTERNATIVE)	
7	TYPICAL DETAILS AND SECTIONS (5 X 10)	
8	TYPICAL DETAILS AND SECTIONS (5 X 5)	
9	LEVELING PAD AND STEP DETAILS	
10	TYPICAL SINEstrip DETAILS	
11	TYPICAL CORNER, SLIP JOINT, AND COPING DETAILS	
12	TYPICAL OBSTRUCTION DETAILS	

PATENT # 7,270,502

PENNSYLVANIA
DEPARTMENT OF TRANSPORTATION
RECOMMENDED

Thomas P Macioce

CHIEF BRIDGE ENGINEER

9/21/2017

I CERTIFY THAT ALL ASSUMPTIONS MADE IN DESIGNING THIS WALL HAVE BEEN VALIDATED THROUGH CONSTRUCTION DETAILS, SPECIAL NOTES AND/OR INSTRUCTIONS TO THE FABRICATOR, ERECTOR AND CONTRACTOR

COMMONWEALTH OF PENNSYLVANIA
REGISTERED PROFESSIONAL
DAVID M. BRODOWSKI
ENGINEER
PE085238

9/19/17

COMMONWEALTH OF PENNSYLVANIA
DEPARTMENT OF TRANSPORTATION
BUREAU OF PROJECT DELIVERY

STANDARD
MECHANICALLY STABILIZED EARTH
RETAINING WALLS
SINE WALL® MSE PANEL SYSTEM

INDEX SHEET

PENNDOT DRAWING # 2015-110

GENERAL NOTES

THE PENNDOT STANDARD DRAWINGS FOR MECHANICALLY STABILIZED EARTH WALLS, BC-799, SHALL BE REFERENCED WITH THIS SUBMITTAL FOR GENERAL NOTES, TYPICAL SECTIONS, AND DETAILS.

DESIGN NOTES

1. THE FOLLOWING DRAWINGS ARE BASED ON THE ASSUMPTION THAT THE MATERIAL WITHIN THE REINFORCED VOLUME, METHODS OF CONSTRUCTION AND QUALITY OF PREFABRICATED COMPONENTS MEET THE SPECIFICATIONS FOR MSE WALLS.

2. SOIL PARAMETERS:
2.1. DESIGN OF THE REINFORCED SOIL STRUCTURES ARE BASED UPON THE FOLLOWING PARAMETERS TO BE SUPPLIED ON A JOB BY JOB BASIS:
2.1.1. GRANULAR FILL MATERIAL:
PROVIDE CRUSHED OR NATURAL SAND, CRUSHED OR UNCRUSHED GRAVEL, BLASTED LIMESTONE, BLASTED SANDSTONE, OR ANY STANDARD SIZE COARSE AGGREGATE MEETING THE FOLLOWING GRADATION AS DETERMINED IN ACCORDANCE WITH PTM616.

SIEVE SIZE:	PERCENT PASSING:
1/2 INCH	100
NO. 40	0-60
NO.200	0-10

DETERMINATION OF FINES CONTENT (MINUS #200 SIEVE MATERIAL) MUST BE BY WASH TEST ACCORDING TO PTM NO. 100. AMOUNT OF MATERIAL FINER THAN NO. 200 SIEVE IN AGGREGATE. THIS IS IN ADDITION TO PTM NO.616 SIEVE ANALYSIS OF COARSE AND FINE AGGREGATE.
HAVE THE BACKFILL CONFORM TO ALL OF THE FOLLOWING ADDITIONAL REQUIREMENTS.
1. FURNISH MATERIALS MEETING THE REQUIREMENTS OF TYPE C COARSE AGGREGATE OR BETTER AS SPECIFIED IN SECTION 703.2 (a) . TABLE B EXCEPT FURNISH MATERIALS FREE OF CLAY LUMPS, FRIABLE PARTICLES, COAL AND COKE. DO NOT USE METALLURGICAL SLAG OR CINDERS.
2. FURNISH MATERIALS WITH A MAXIMUM PLASTICITY INDEX (PI) OF 3 AS DETERMINED IN ACCORDANCE WITH AASHTO T89 AND T90.
3. FURNISH MATERIALS EXHIBITING AN ANGLE OF INTERNAL FRICTION OF NOT LESS THAN 34 DEGREES AS DETERMINED IN ACCORDANCE WITH AASHTO T236 ON THE PORTION FINER THAN NO. 10 SIEVE COMPACTED TO 95% OF PTM NO. 106, METHOD B AT OPTIMUM MOISTURE CONTENT, EXCEPT FOR COARSE AGGREGATE AS SPECIFIED IN SECTION 703.2.
DIRECT SHEAR TESTING MAY BE PERFORMED ON SAMPLES CONTAINING MATERIAL LARGER THAN NO. 10 SIEVE IF THE SHEAR DEVICE CONFORMS WITH AASHTO T236, SECTIONS 5.4 AND 5.5.
2.1.2. REINFORCED FILL:
EFFECTIVE INTERNAL FRICTION ANGLE = 34°
EFFECTIVE COHESION = N/A
MOIST UNIT WEIGHT = 90-120 PCF
2.1.3. RETAINED FILL:
EFFECTIVE INTERNAL FRICTION ANGLE = 30°
EFFECTIVE COHESION = N/A
MOIST UNIT WEIGHT = 120 PCF
2.1.4. FOUNDATION MATERIAL:
EFFECTIVE INTERNAL FRICTION ANGLE = 30°
EFFECTIVE COHESION = N/A
MOIST UNIT WEIGHT = 120 PCF
2.2. SURCHARGE LOADS APPLIED TO STRUCTURE:
1. LIVE LOAD SURCHARGE: 360 PSF
2. LIVE LOAD CONSTRUCTION SURCHARGE AS REQ'D.
2.3. THE DESIGN ASSUMES NO WATER PRESSURE ACTS ON THE WALL.

3. THE MAXIMUM APPLIED BEARING PRESSURE AT THE FOUNDATION LEVEL IS SHOWN ON THE WALL ELEVATIONS ON THE PLANS. IT IS THE RESPONSIBILITY OF OTHERS TO DETERMINE THAT THIS APPLIED BEARING PRESSURE IS ALLOWABLE AT THAT LOCATION.

4. ANY UNSUITABLE FOUNDATION MATERIAL BELOW THE REINFORCED VOLUME, AS DETERMINED BY THE ENGINEER, SHALL BE EXCAVATED AND REPLACED WITH SUITABLE MATERIAL OR OTHERWISE STABILIZED AS DIRECTED BY THE ENGINEER.

5. DESIGN, MATERIALS AND CONSTRUCTION ARE BASED ON THE AASHTO LRFD BRIDGE DESIGN & CONSTRUCTION SPECIFICATIONS, 7TH EDITION AND COMMENTARY AS AMENDED BY PENNDOT DESIGN MANUAL PART 4, VOLUME 1, PUB.15M.

BARRIER IMPACT = (PER PROJECT REQUIREMENTS)
SEISMIC = (PER PROJECT REQUIREMENTS)
HYDROSTATIC = (PER PROJECT REQUIREMENTS)
DESIGN LIFE = (PER PROJECT REQUIREMENTS)

6. THE DESIGN CONTAINED IN THESE DRAWINGS IS BASED ON INFORMATION PROVIDED BY OTHERS. ON THE BASIS OF THIS INFORMATION, SINE WALL, LLC IS RESPONSIBLE FOR INTERNAL STABILITY OF THE STRUCTURE ONLY. EXTERNAL STABILITY, INCLUDING THE FOUNDATION AND SLOPE STABILITY IS THE RESPONSIBILITY OF OTHERS.

7. DESIGN OF DRAINAGE SYSTEM TO BE PROVIDED BY OWNER AND SUPPLIED BY CONTRACTOR

8. PULLOUT FRICTION VALUES (F*) FOR SINEstrips SHALL BE IN ACCORDANCE WITH AASHTO FIGURE 11.10.3.3.2.2 WHERE F* IS 1.2+LOG Cu <= 2.0 AT 0 FT. DEPTH AND TAN (φ) AT 20 FT DEPTH AND DEEPER.

WALL CONSTRUCTION

1. VERTICAL AND HORIZONTAL JOINTS SHALL BE 3/4" UNLESS SHOWN OTHERWISE ON THE PLANS.

2. WALLS ALONG CURVES WILL BE ACHIEVED BY A SERIES OF SHORT CHORDS TO MATCH THE REQUIRED RADIUS.

3. FOR LOCATION AND ALIGNMENT OF THE MSE STRUCTURES, SEE RETAINING WALL CONTROL PLANS.

4. IF MANHOLES AND DROP INLETS ARE REQUIRED, THEY SHALL BE LOCATED AS SHOWN ON RETAINING WALL ELEVATIONS.

5. IF PILES ARE LOCATED WITHIN THE REINFORCED VOLUME, THEY SHALL BE DRIVEN PRIOR TO CONSTRUCTION OF THE WALL UNLESS AN ALTERNATIVE METHOD TO PROTECT THE STRUCTURE, WHICH IS ACCEPTABLE TO THE ENGINEER AND SINE WALL, IS PROPOSED AND APPROVED IN WRITING. ALL PILING OR OTHER DEEP SEATED COLUMNS SHALL BE SLEAVED WITH BOND BREAKERS THROUGH THE REINFORCED MASS.

6. BACKFILL MATERIAL SHALL BE COMPACTED TO A LEVEL OF 2" (+/- 1") ABOVE THE ELEVATION OF THE SINEstrip CONNECTIONS. INSTALLATION OF SINEstrips SHALL BE PERMITTED ONLY AFTER PLACEMENT AND COMPACTION OF THE BACKFILL HAS REACHED THE REQUIRED ELEVATION.

7. FOR STRUCTURES TALLER THAN 20' IN HEIGHT, APPROVED FILL MATERIAL IN FRONT OF THE WALL SHALL BE PLACED AND COMPACTED BEFORE WALL CONSTRUCTION EXCEEDS A HEIGHT OF 20'. FINISHED GRADE BACKFILL SHALL BE COMPACTED TO 95% OF ASTM D-698 METHOD "C" OR "D" UNLESS OTHERWISE DIRECTED BY THE ENGINEER.

8. IT IS THE CONTRACTORS RESPONSIBILITY TO LOCATE ANY GUARDRAIL POSTS BEHIND THE WALLS PRIOR TO PLACEMENT OF THE TOP LAYER OF SINEstrips. IF POSTS CANNOT BE RELOCATED, INDIVIDUAL SINEstrip MAY BE SKEWED UP TO 15° TO AVOID THE POST LOCATIONS IF AUTHORIZED BY THE ENGINEER.

9. IF EXISTING OR FUTURE STRUCTURES WITHIN THE REINFORCED VOLUME INTERFERE WITH THE NORMAL PLACEMENT OF SINEstrip AND SPECIFIC DIRECTION HAS NOT BEEN PROVIDED IN THE PLANS, THE CONTRACTOR SHALL NOTIFY THE ENGINEER IMMEDIATELY.

10. THE CONTRACTOR IS RESPONSIBLE FOR DEFLECTING THE TOP ROWS OF SINEstrip DOWNWARD TO AVOID CONFLICTS WITH ROADWAY CONSTRUCTION OPERATIONS SUCH AS SUPER ELEVATIONS, ETC.

11. THE CONTRACTOR IS RESPONSIBLE FOR THE CONTROL OF STORMWATER AND RUN-OFF TO BE COLLECTED AND DISCHARGED AWAY FROM THE WALL AND REINFORCED BACKFILL.

MATERIALS PROVIDED FOR SINE WALL SYSTEM

	SPECIFICATIONS	NOTES	
PRECAST CONCRETE STANDARD PANEL SIZE CONCRETE STRENGTH COPING, CORNER & SLIP JOINT	5'x5' OR 5x10' fc = 4000 PSI @ 28 DAYS		MSE PANEL SYSTEM
CONCRETE SURFACE FINISH PANEL COPING, CORNER & SLIP JOINT	SMOOTH OR AS SPECIFIED	PLAIN GRAY, OR AS SPECIFIED	
STEEL REINFORCING PANEL COPING, CORNER & SLIP JOINT	ASTM A615 OR A996 GRADE 60	COATING: BLACK OR EPOXY COATED AS SPECIFIED	
SINEstrip CONNECTOR	ASTM A 1011, GRADE 50	**GALVANIZED	
SINEstrip-US PATENT 7,270,502	1.5" - 2.0" - 2.5" WIDE GALVANIZED GRADE 65 - ASTM A1011	*GALVANIZED	
BOLTS - NUTS	1/2" DIA. x 1.25" LONG BOLTS: ASTM A325 NUTS: ASTM A563	**GALVANIZED	
GEOTEXTILE JOINT FABRIC	12" WIDE MIRAFI 180N OR APPROVED EQUAL AASHTO M 288		
BEARING PADS	3"x6"x3/4", OR 3"x4"x3/4" ASTM D-2000 M2AA 807 DUROMETER HARDNESS OF 80 +/-5		
STEEL ANGLE	5"x5"x3/8" GRADE 36	*GALVANIZED	

*HOT-DIP GALVANIZED PER ASTM A123,AASHTO M111 WITH 2.0 OZ/SF OR 3.4 MILS THICKNESS.

**GALVANIZED PER ASTM A153.

12. NO BACKFILL SHALL BE PLACED UNTIL IT HAS BEEN APPROVED BY THE ENGINEER. MECHANICAL TAMPERS OR APPROVED COMPACTING EQUIPMENT SHALL BE USED TO COMPACT ALL BACKFILL. THE SPECIFIED COMPACTION OF THE SELECT BACKFILL SHALL BE ACCOMPLISHED BY USE OF LARGE, SMOOTH DRUM, ROLLERS WITH THE EXCEPTION OF THE 3 FOOT ZONE DIRECTLY BEHIND THE FACING PANELS. NO SHEEPSFOOT ROLLERS SHALL BE USED. WITHIN THE 3 FOOT ZONE, SMALL, SINGLE OR DOUBLE DRUM, HAND OPERATED, WALK-BEHIND VIBRATING PLATE COMPACTORS SHALL BE USED, AND AT LEAST THREE PASSES SHALL BE MADE TO COMPACT THE BACKFILL TO THE MINIMUM REQUIRED DENSITY.

13. FOR OTHER INFORMATION PERTAINING TO WALL CONSTRUCTION PLEASE REFER TO THE SINE WALL CONSTRUCTION MANUAL.

14. INVENTURE CIVIL, LLC SUPPLIES MSE PANEL WALLS AND COMPONENTS FOR THE STRUCTURES DETAILED HEREIN. THE CONSTRUCTION AND QA/QC MANUAL FURNISHED BY INVENTURE CIVIL, LLC IS INTENDED TO PROVIDE A GENERAL EXPLANATION OF THE SYSTEM. IT IS THE CONTRACTORS OBLIGATION TO PREPARE AND EXECUTE A PROJECT SPECIFIC ERECTION SEQUENCE, PANEL UNLOADING, HANDLING AND BRACING AND FALL PROTECTION SYSTEM. THE BRACING SYSTEM SHOWN IN THE CONSTRUCTION AND QA/QC MANUAL IS GENERAL IN NATURE AND DOES NOT ACCOUNT FOR PROJECT SPECIFIC CRITERIA. COMPLIANCE WITH THE GUIDELINES IN THIS MANUAL DOES NOT RELIEVE THE CONTRACTOR OF HIS RESPONSIBILITY TO CONSTRUCT THE WALL ACCORDING TO THE PROJECT PLANS, SPECIFICATIONS AND CONTRACT DOCUMENTS OR COMPLIANCE WITH ALL FALL PROTECTION, SAFETY, LAWS, STANDARDS AND PROCEDURES REQUIRED.

MATERIAL NOTES

1. ONLY THE MATERIALS SHOWN IN THE TABLE "MATERIALS PROVIDED FOR THE SINE WALL SYSTEM" WILL BE SUPPLIED BY SINE WALL. ANY OTHER MATERIALS REQUIRED TO CONSTRUCT THE MSE STRUCTURE ACCORDING TO THE CONTRACT DRAWINGS AND SPECIFICATIONS SHALL BE SUPPLIED BY THE CONTRACTOR, INCLUDING BUT NOT LIMITED TO: EXPANSION JOINT MATERIAL SANDBLASTING, PAINTING, GALVANIZING, SEALERS OR OTHER SPECIAL APPLIED COATINGS.

9/21/2017

COMMONWEALTH OF PENNSYLVANIA
REGISTERED PROFESSIONAL
DAVID M. BRODOWSKI
ENGINEER
PE085238
9/14/17

COMMONWEALTH OF PENNSYLVANIA
DEPARTMENT OF TRANSPORTATION
BUREAU OF PROJECT DELIVERY

STANDARD
MECHANICALLY STABILIZED EARTH
RETAINING WALLS
SINE WALL® MSE PANEL SYSTEM

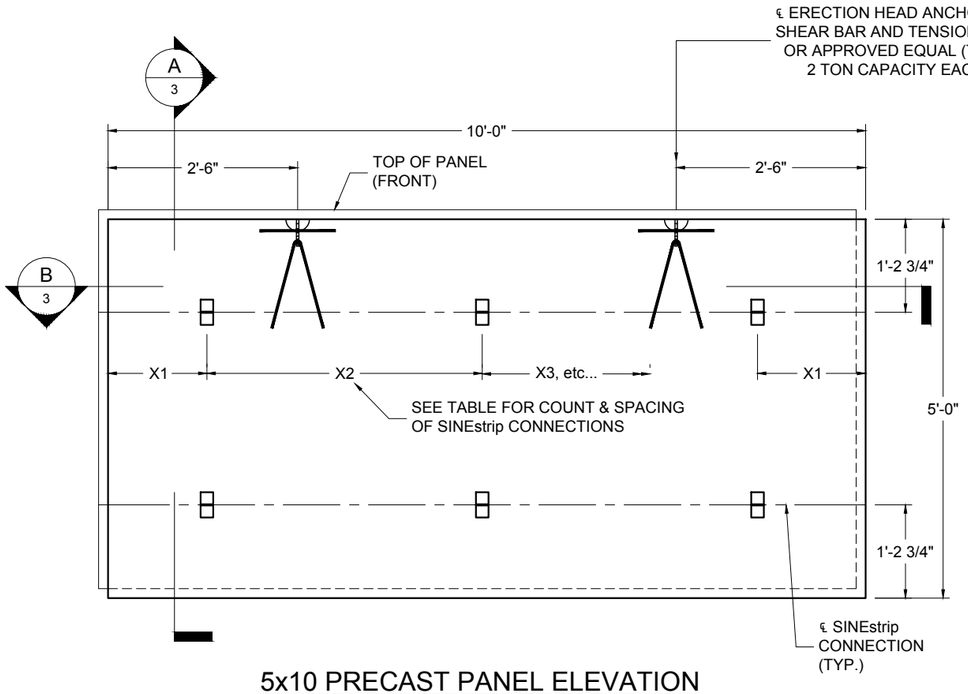

5x10 PRECAST PANEL ELEVATION

FROM SOIL OR CASTING FACE

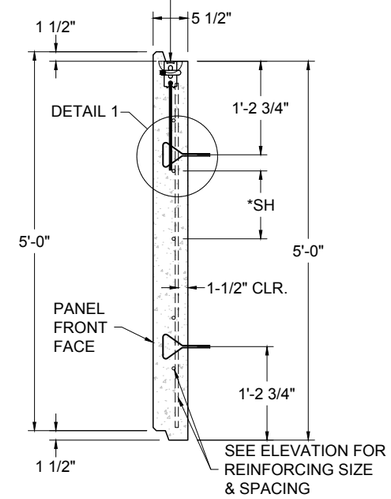

SECTION 'A'

NO SCALE

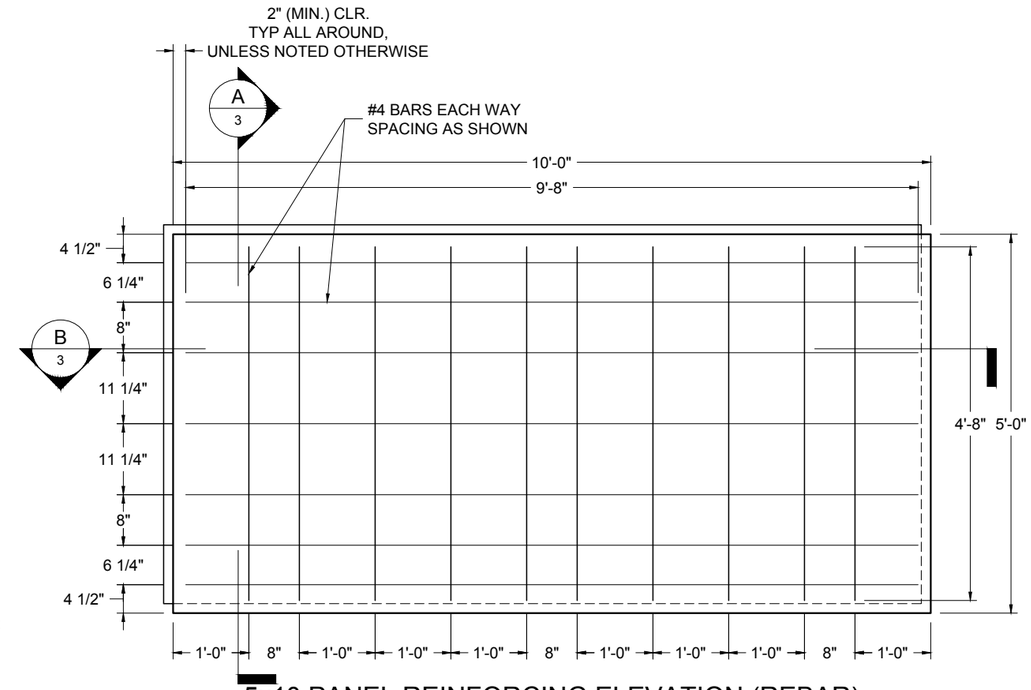

5x10 PANEL REINFORCING ELEVATION (REBAR)

FROM SOIL OR CASTING FACE

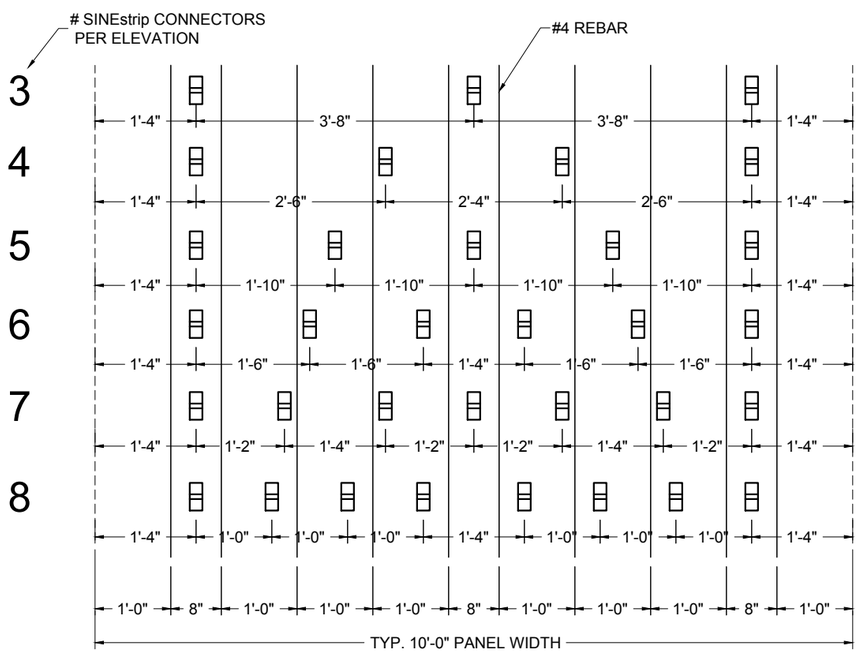

5X10 PANEL - CONNECTOR SPACING (REBAR)

NO SCALE

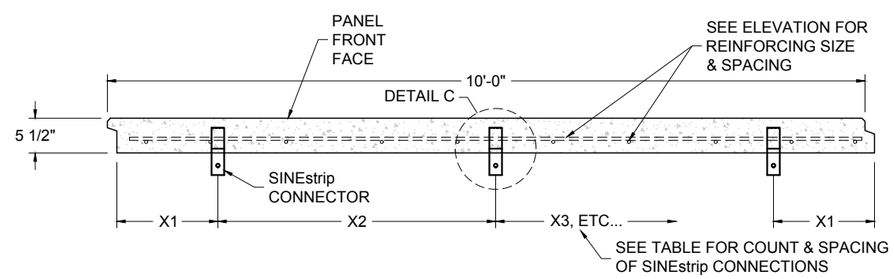

SECTION 'B'

NO SCALE

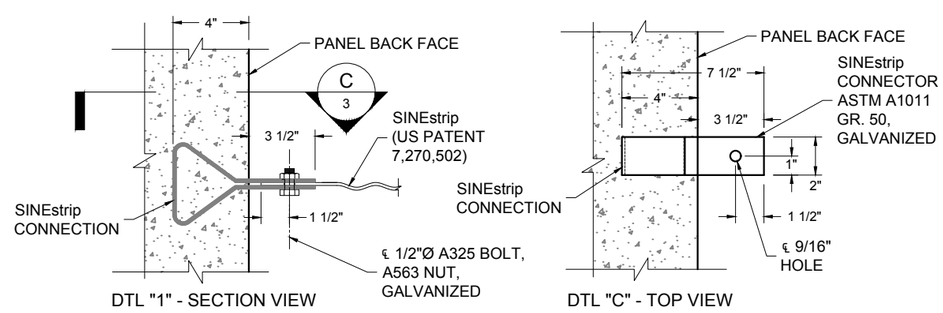

SINEstrip CONNECTOR DETAIL

NO SCALE

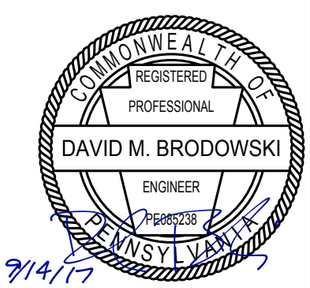

9/21/2017

9/14/17

COMMONWEALTH OF PENNSYLVANIA
DEPARTMENT OF TRANSPORTATION
BUREAU OF PROJECT DELIVERY

STANDARD
MECHANICALLY STABILIZED EARTH
RETAINING WALLS
SINE WALL® MSE PANEL SYSTEM

STANDARD 5 x 10 PANEL DETAILS

PENNDOT DRAWING # 2015-110

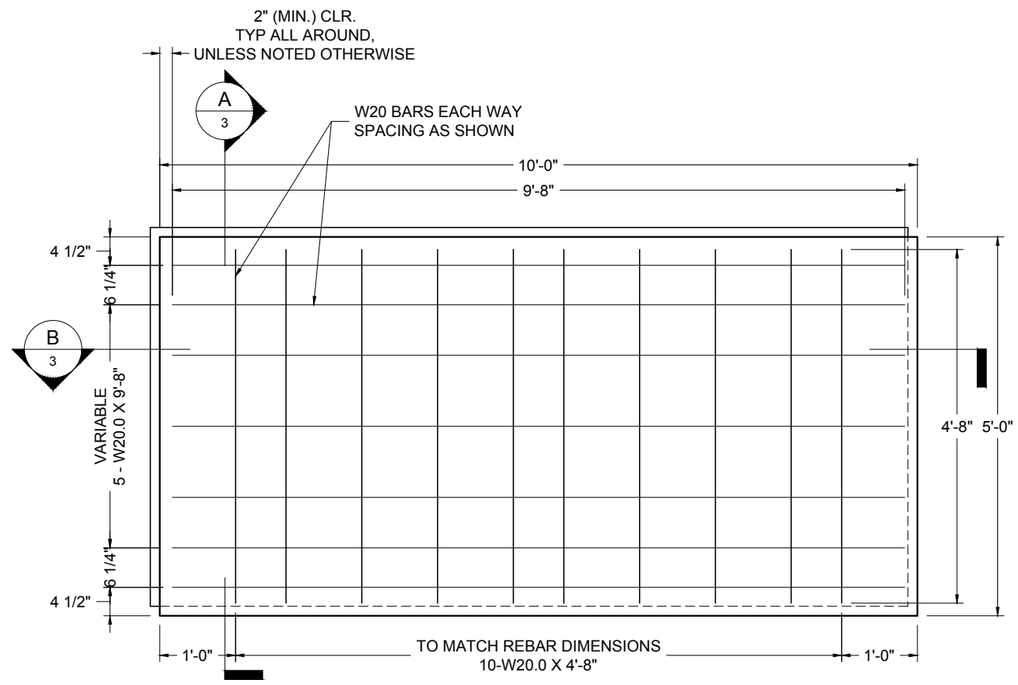

5x10 PANEL REINFORCING ELEVATION (WELDED WIRE ALTERNATIVE)

FROM SOIL OR CASTING FACE

NOTES:

1. W20 MAY BE SUBSTITUTED FOR D20

2. IF REQUIRED, SPLICES OF THE WWR SHEET OVERLAPS SHALL BE THE SPACING OF THE TRANSVERSE WIRES PLUS 2", BUT NOT LESS THAN 10 ".

9/21/2017

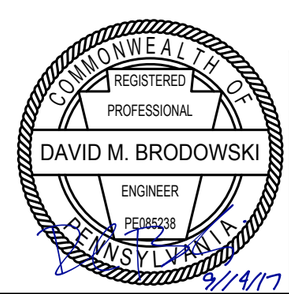

COMMONWEALTH OF PENNSYLVANIA
DEPARTMENT OF TRANSPORTATION
BUREAU OF PROJECT DELIVERY

STANDARD
MECHANICALLY STABILIZED EARTH
RETAINING WALLS
SINE WALL® MSE PANEL SYSTEM

STANDARD 5 x 10 PANEL DETAILS (WWF ALTERNATIVE)

PENNDOT DRAWING # 2015-110

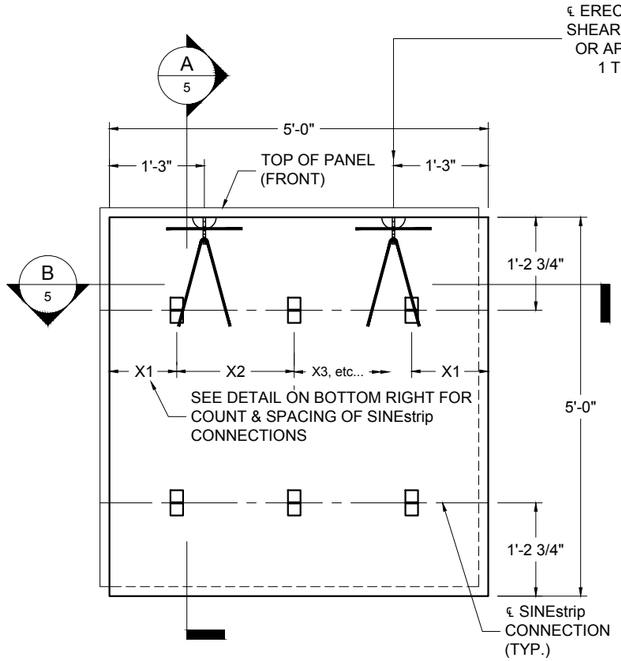

5x5 PRECAST PANEL ELEVATION

FROM SOIL OR CASTING FACE

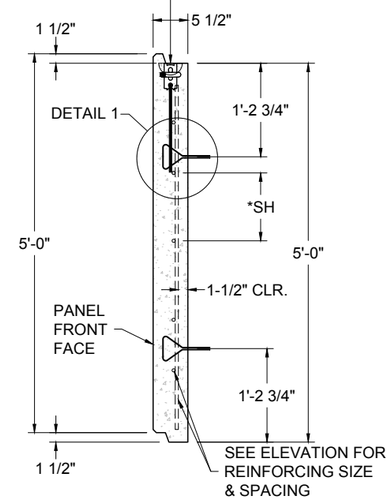

SECTION 'A'

NO SCALE

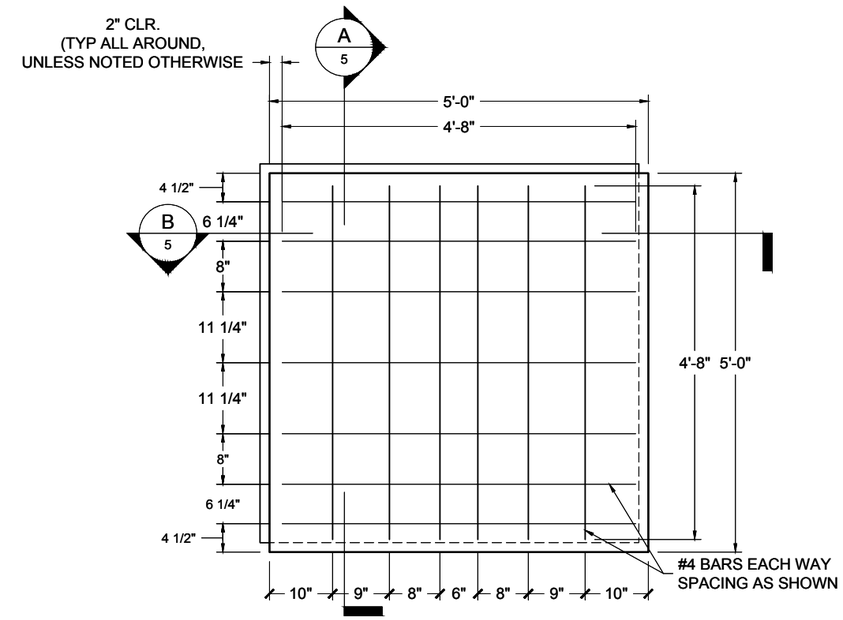

5x5 PANEL REINFORCING ELEVATION (REBAR)

FROM SOIL OR CASTING FACE

REBAR SCHEDULE			
QUANTITY	SIZE	LENGTH	V/H
6	#4	4'-8"	VERTICAL
7	#4	4'-8"	HORIZONTAL
TOTAL: 13		60'-8"	

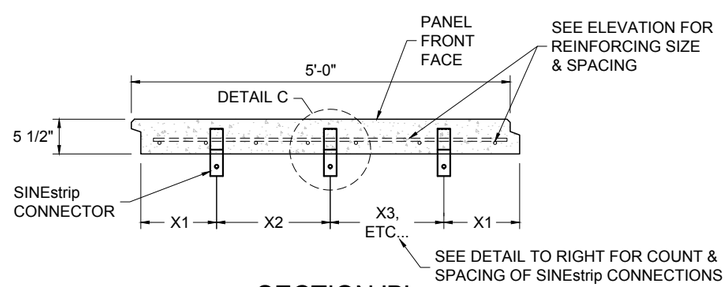

SECTION 'B'

NO SCALE

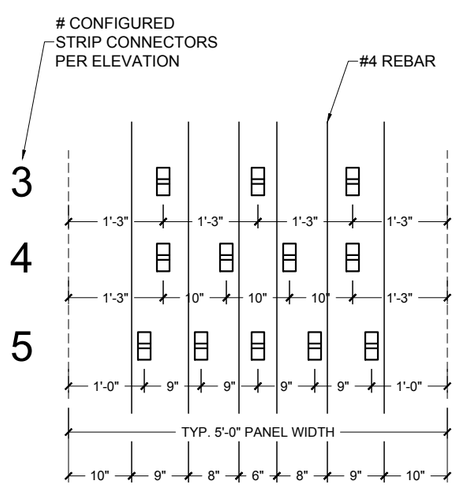

5X5 PANEL - CONNECTOR SPACING (REBAR)

NO SCALE

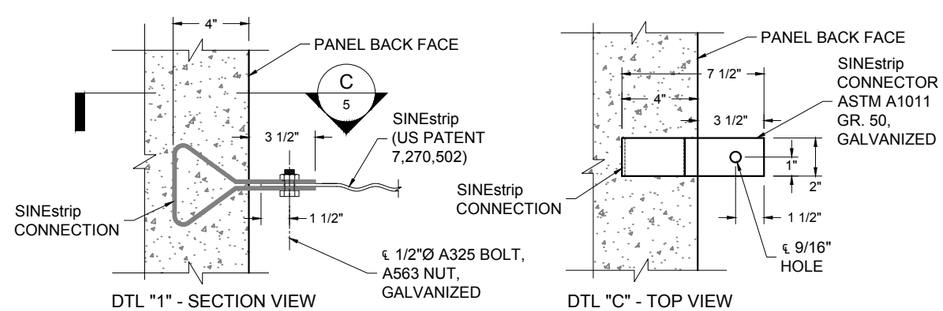

SINEstrip CONNECTOR DETAIL

NO SCALE

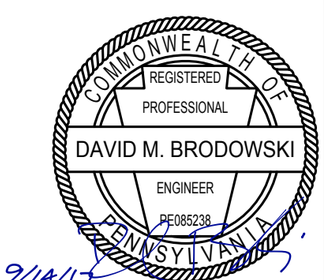

9/21/2017

9/14/17

COMMONWEALTH OF PENNSYLVANIA
DEPARTMENT OF TRANSPORTATION
BUREAU OF PROJECT DELIVERY

STANDARD
MECHANICALLY STABILIZED EARTH
RETAINING WALLS
SINE WALL® MSE PANEL SYSTEM

STANDARD 5 x 5 PANEL DETAILS

PENNDOT DRAWING # 2015-110

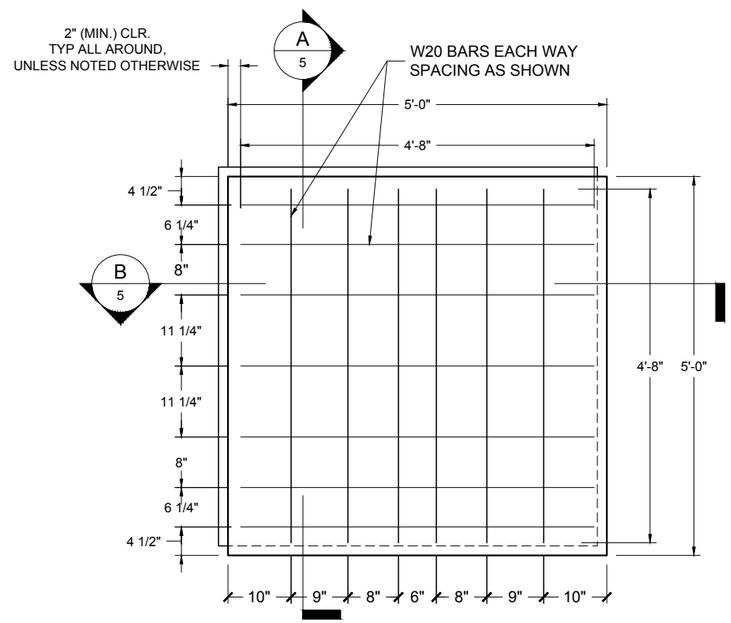

5x5 PANEL REINFORCING ELEVATION (WELDED WIRE ALTERNATIVE)

FROM SOIL OR CASTING FACE

NOTES:

1. W20 MAY BE SUBSTITUTED FOR D20

2. IF REQUIRED, SPLICES OF THE WWR SHEET OVERLAPS SHALL BE THE SPACING OF THE TRANSVERSE WIRES PLUS 2", BUT NOT LESS THAN 10 ".

9/21/2017

COMMONWEALTH OF PENNSYLVANIA
REGISTERED
PROFESSIONAL
DAVID M. BRODOWSKI
ENGINEER
PE085238
PENNSYLVANIA

9/14/17

COMMONWEALTH OF PENNSYLVANIA
DEPARTMENT OF TRANSPORTATION
BUREAU OF PROJECT DELIVERY

STANDARD
MECHANICALLY STABILIZED EARTH
RETAINING WALLS
SINE WALL® MSE PANEL SYSTEM

STANDARD 5 x 5 PANEL DETAILS (WWF ALTERNATIVE)

PENNDOT DRAWING # 2015-110

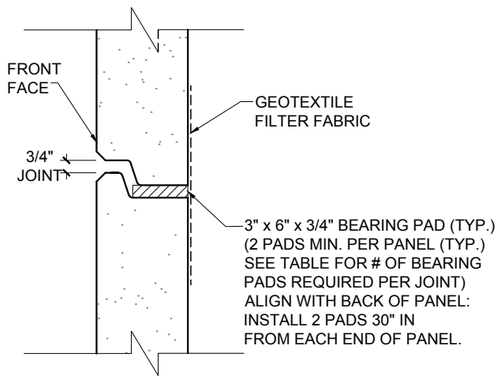

NUMBER OF BEARING PADS PER JOINT	
NUMBER OF PANELS TO BE PLACED ABOVE JOINT	NUMBER OF BEARING PADS REQUIRED PER JOINT
≤3	2
4-7	4
8 OR MORE	6

TYPICAL BEARING PAD DETAIL

N.T.S.

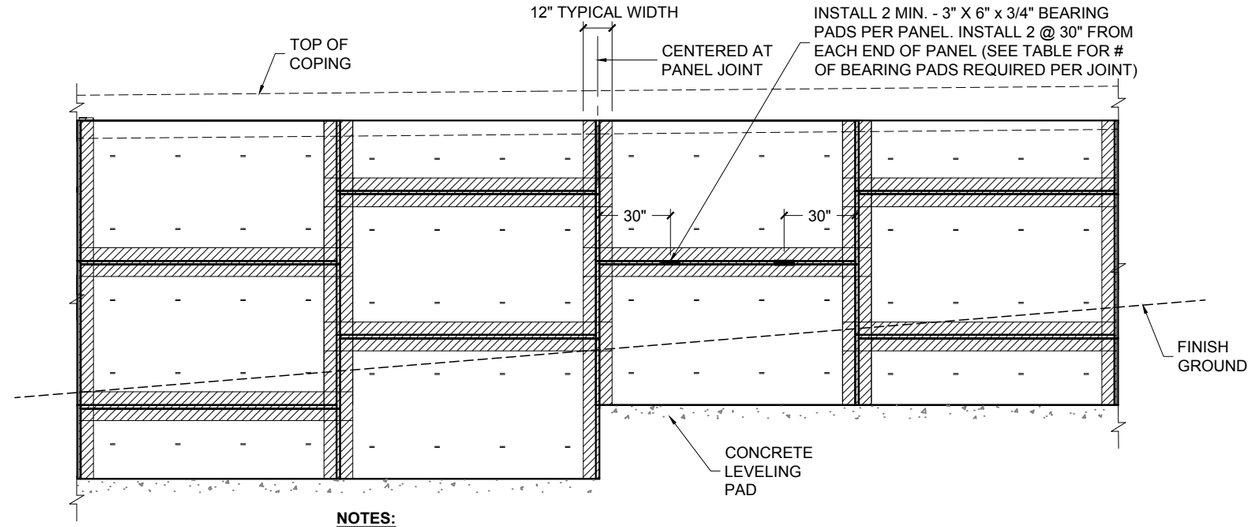

NOTES:

1. GEOTEXTILE (MIRAFI 180N OR EQUAL) TO BE ATTACHED TO THE BACK OF THE PANEL USING ADHESIVE
2. USE ENOUGH ADHESIVE TO HOLD GEOTEXTILE IN PLACE DURING BACKFILL OPERATIONS

TYPICAL FILTER FABRIC DETAIL

NO SCALE

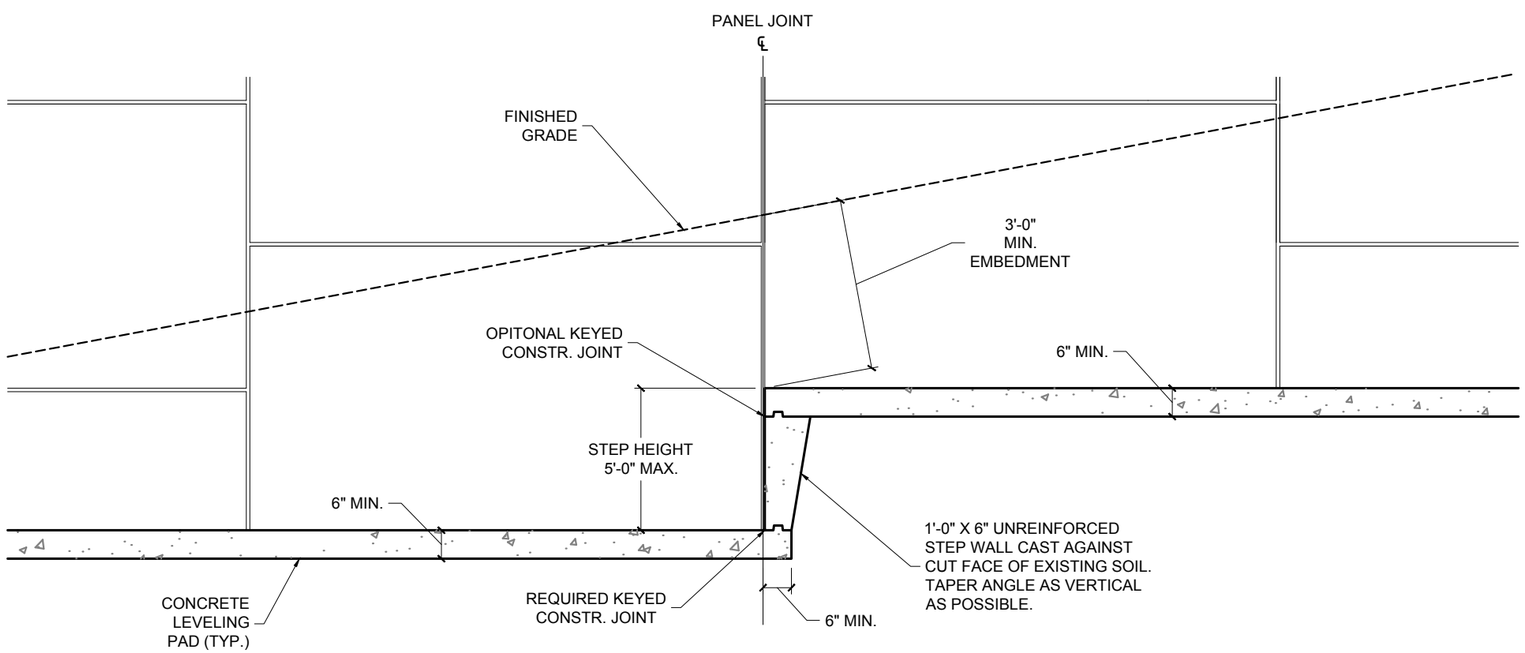

TYPICAL LEVELING PAD DETAIL

NO SCALE

9/21/2017

COMMONWEALTH OF PENNSYLVANIA
REGISTERED PROFESSIONAL
DAVID M. BRODOWSKI
ENGINEER
PE085238
PENNSYLVANIA

9/14/17

COMMONWEALTH OF PENNSYLVANIA
DEPARTMENT OF TRANSPORTATION
BUREAU OF PROJECT DELIVERY

STANDARD
MECHANICALLY STABILIZED EARTH
RETAINING WALLS
SINE WALL® MSE PANEL SYSTEM

TYPICAL DETAILS AND SECTIONS (5 X 10)

PENNDOT DRAWING # 2015-110

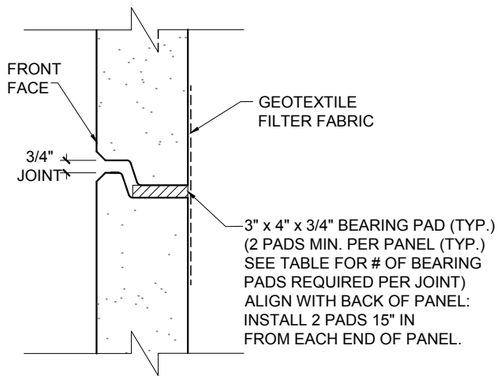

NUMBER OF BEARING PADS PER JOINT	
NUMBER OF PANELS TO BE PLACED ABOVE JOINT	NUMBER OF BEARING PADS REQUIRED PER JOINT
<5	2
6-9	3
10 OR MORE	4

TYPICAL BEARING PAD DETAIL

N.T.S.

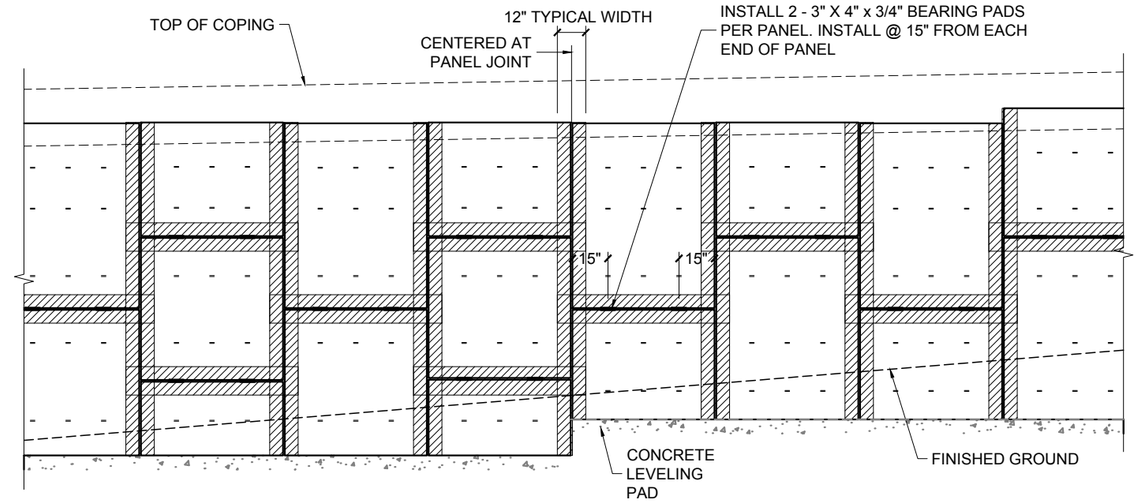

NOTES:
1. GEOTEXTILE TO BE ATTACHED TO THE BACK OF THE PANEL USING ADHESIVE.
2. ADHESIVE TO BE APPLIED TO THE PANELS ONLY AND SHALL NOT BE APPLIED WITHIN 2" OF A JOINT.
3. FABRIC SHALL OVERLAP A MINIMUM OF 4". QUANTITIES SUPPLIED ARE BASED ON A 4" OVERLAP.

TYPICAL FILTER FABRIC DETAIL

NO SCALE

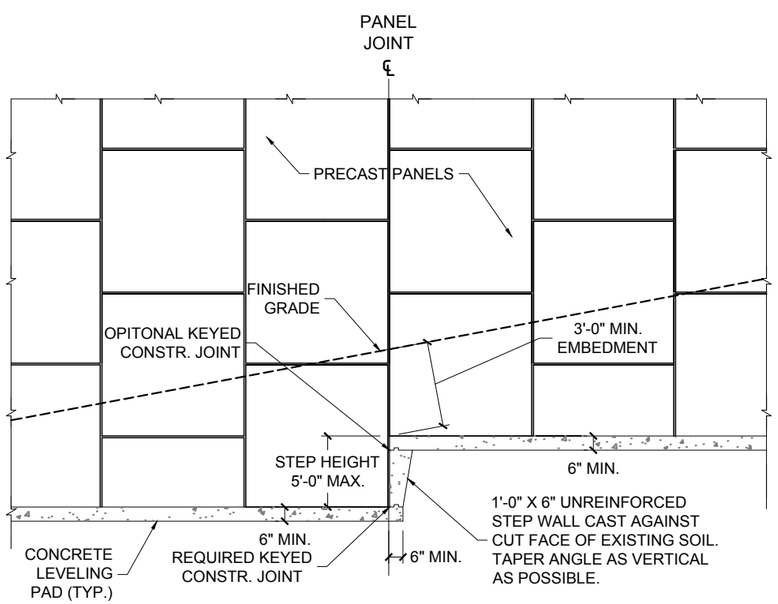

TYPICAL LEVELING PAD STEP

NO SCALE

9/21/2017

COMMONWEALTH OF PENNSYLVANIA
REGISTERED PROFESSIONAL
DAVID M. BRODOWSKI
ENGINEER
PE085238
PENNSYLVANIA

9/14/17

COMMONWEALTH OF PENNSYLVANIA
DEPARTMENT OF TRANSPORTATION
BUREAU OF PROJECT DELIVERY

STANDARD
MECHANICALLY STABILIZED EARTH
RETAINING WALLS
SINE WALL® MSE PANEL SYSTEM

TYPICAL DETAILS AND SECTIONS (5 X 5)

PENNDOT DRAWING # 2015-110

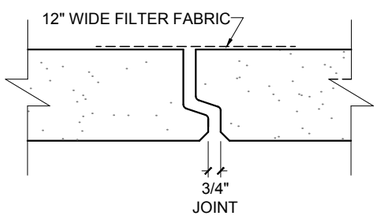

VERTICAL JOINT DETAIL

N.T.S.

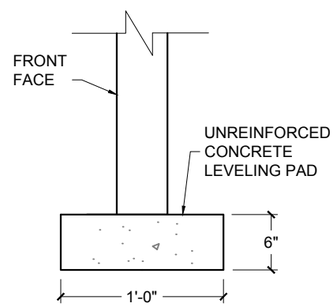

TYPICAL LEVELING PAD DETAIL

NO SCALE

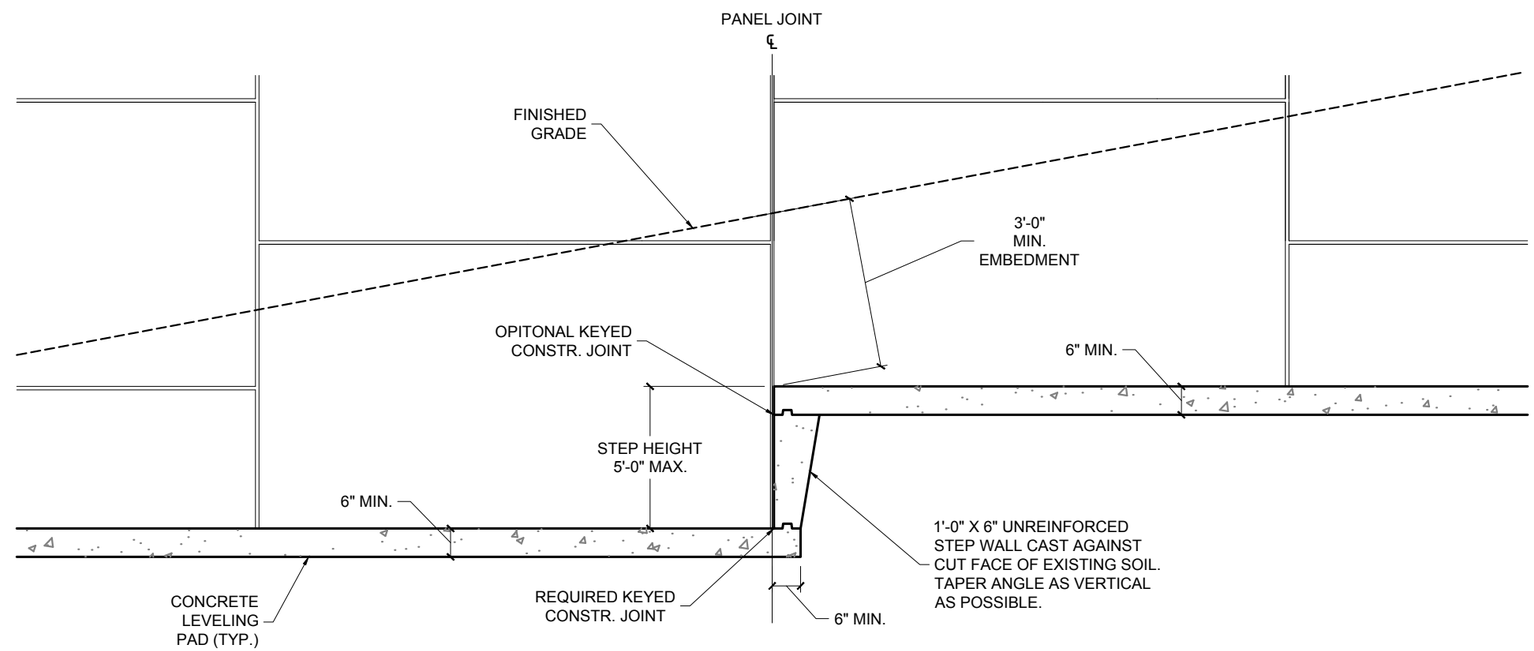

TYPICAL LEVELING PAD DETAIL

NO SCALE

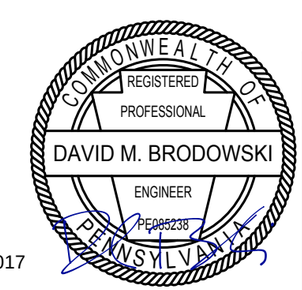

9/21/2017

9/14/17

COMMONWEALTH OF PENNSYLVANIA
DEPARTMENT OF TRANSPORTATION
BUREAU OF PROJECT DELIVERY

STANDARD
MECHANICALLY STABILIZED EARTH
RETAINING WALLS
SINE WALL® MSE PANEL SYSTEM

LEVELING PAD AND STEP DETAILS

PENNDOT DRAWING # 2015-110

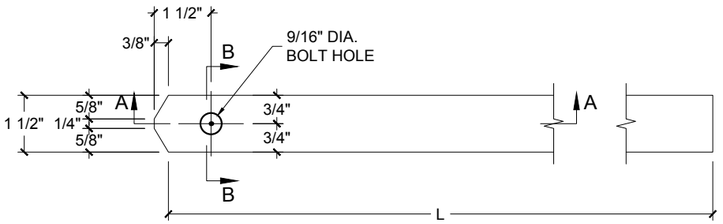

PLAN VIEW

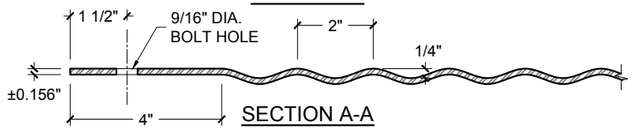

SECTION A-A

PATENT # 7,270,502

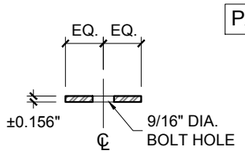

SECTION B-B

SINEstrip DETAIL

NO SCALE

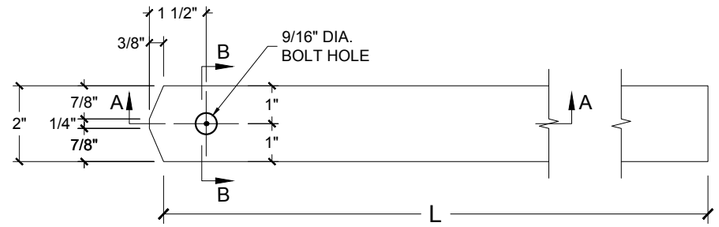

PLAN VIEW

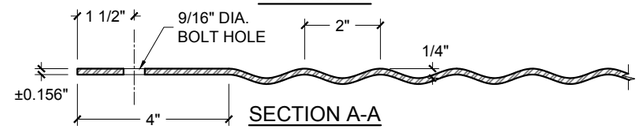

SECTION A-A

PATENT # 7,270,502

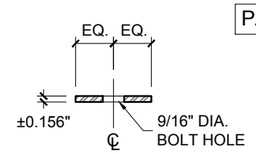

SECTION B-B

SINEstrip DETAIL

NO SCALE

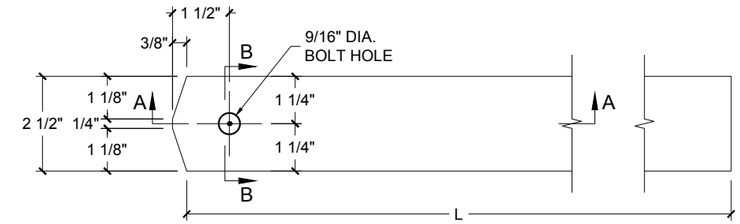

PLAN VIEW

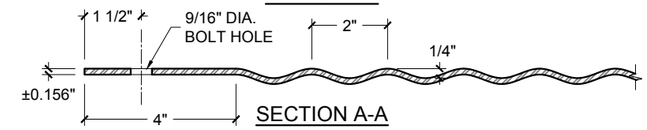

SECTION A-A

PATENT # 7,270,502

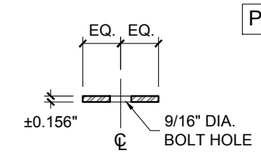

SECTION B-B

SINEstrip DETAIL

NO SCALE

NOTE:
ALL CUT STEEL SHALL HAVE EDGES COATED WITH 2 COATS OF APPROVED ZINC GALVANIZING COMPOUND.

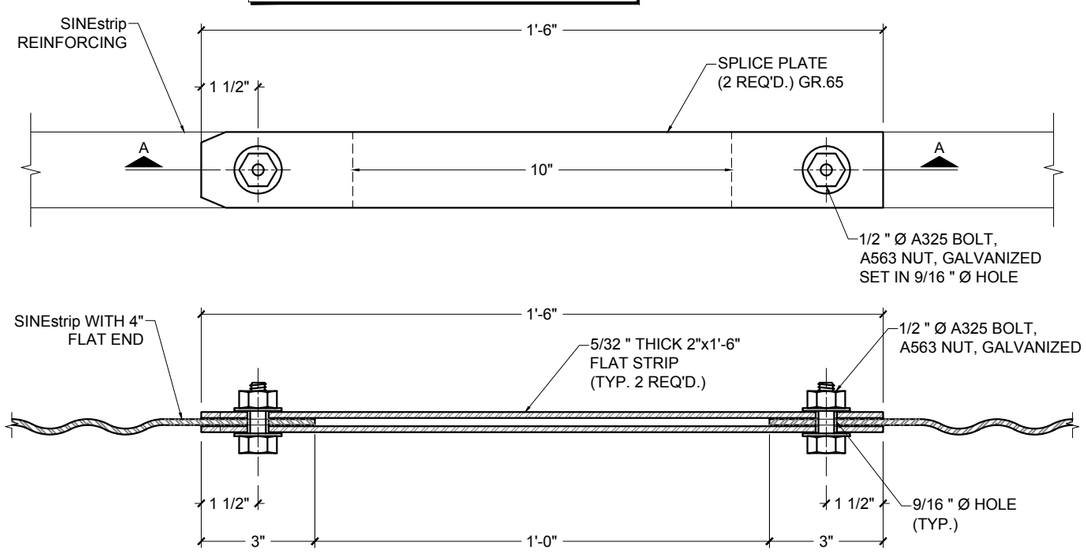

SPLICE PLATE DETAIL

NO SCALE

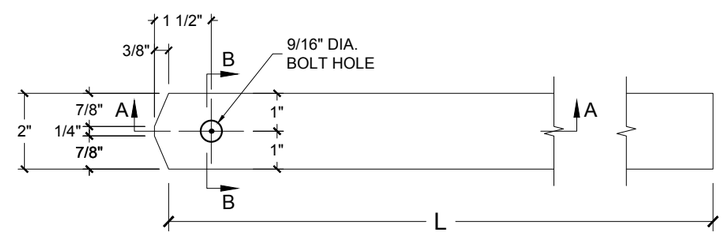

PLAN VIEW

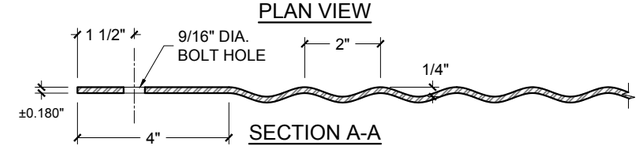

SECTION A-A

PATENT # 7,270,502

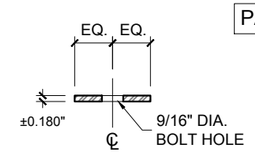

SECTION B-B

SINEstrip DETAIL

NO SCALE

COMMONWEALTH OF PENNSYLVANIA
REGISTERED
PROFESSIONAL
DAVID M. BRODOWSKI
ENGINEER
PE085238
9/21/17

9/21/2017

COMMONWEALTH OF PENNSYLVANIA
DEPARTMENT OF TRANSPORTATION
BUREAU OF PROJECT DELIVERY

STANDARD
MECHANICALLY STABILIZED EARTH
RETAINING WALLS
SINE WALL® MSE PANEL SYSTEM

TYPICAL SINEstrip DETAILS

PENNDOT DRAWING # 2015-110

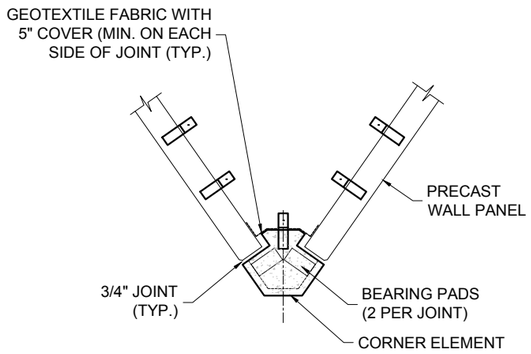

ACUTE CORNER ELEMENT DETAIL

NO SCALE

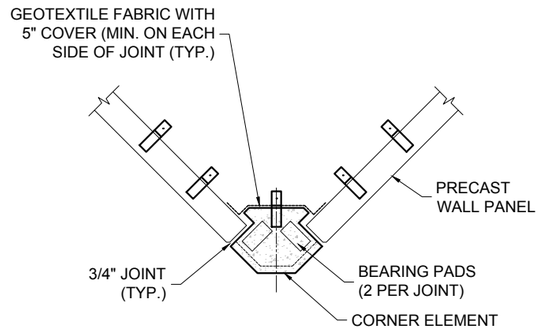

90° CORNER ELEMENT DETAIL

NO SCALE

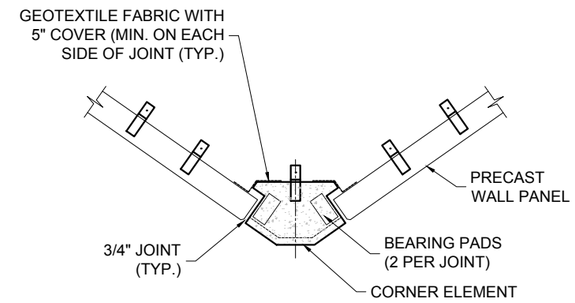

OBTUSE CORNER ELEMENT DETAIL

NO SCALE

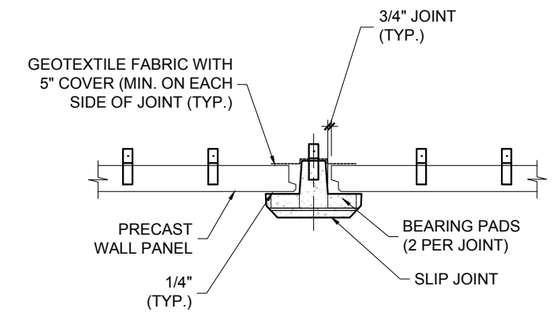

SLIP JOINT ELEMENT DETAIL

NO SCALE

NOTE:
TYPICAL DETAILS SHOWN. SEE PROJECT DRAWINGS FOR DETAILS CUSTOMIZED FOR SITE CONDITIONS.

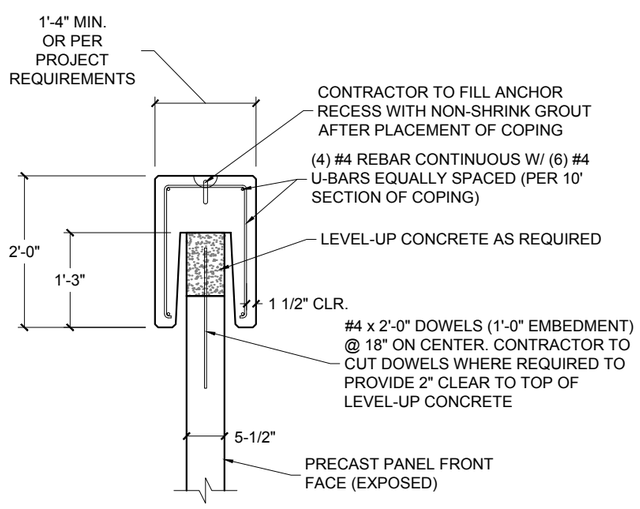

NOTE: C.I.P. COPING SIMILAR

PRECAST COPING DETAIL

NO SCALE

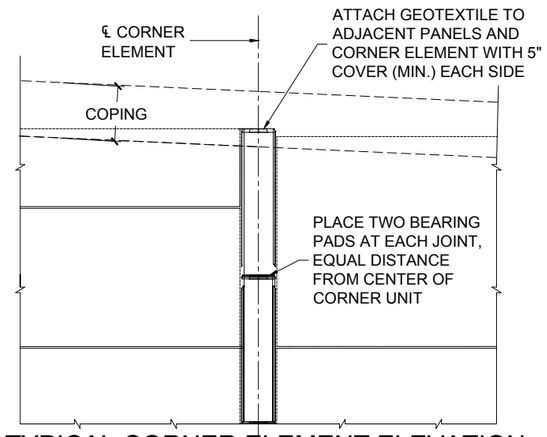

TYPICAL CORNER ELEMENT ELEVATION

NO SCALE

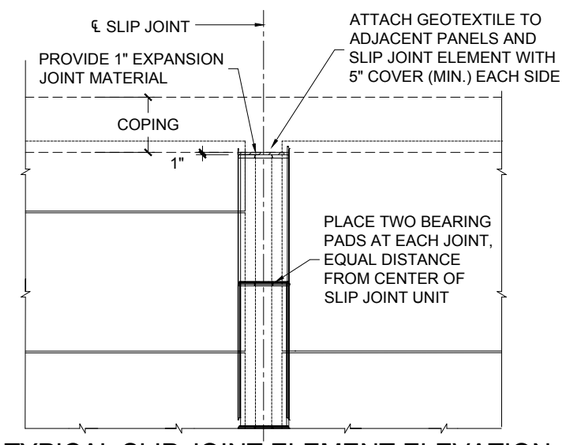

TYPICAL SLIP JOINT ELEMENT ELEVATION

NO SCALE

9/21/2017

COMMONWEALTH OF PENNSYLVANIA
REGISTERED PROFESSIONAL
DAVID M. BRODOWSKI
ENGINEER
PE085238
9/21/17

COMMONWEALTH OF PENNSYLVANIA
DEPARTMENT OF TRANSPORTATION
BUREAU OF PROJECT DELIVERY

STANDARD
MECHANICALLY STABILIZED EARTH
RETAINING WALLS
SINE WALL® MSE PANEL SYSTEM

TYPICAL CORNER, SLIP JOINT, AND COPING DETAILS

PENNDOT DRAWING # 2015-110

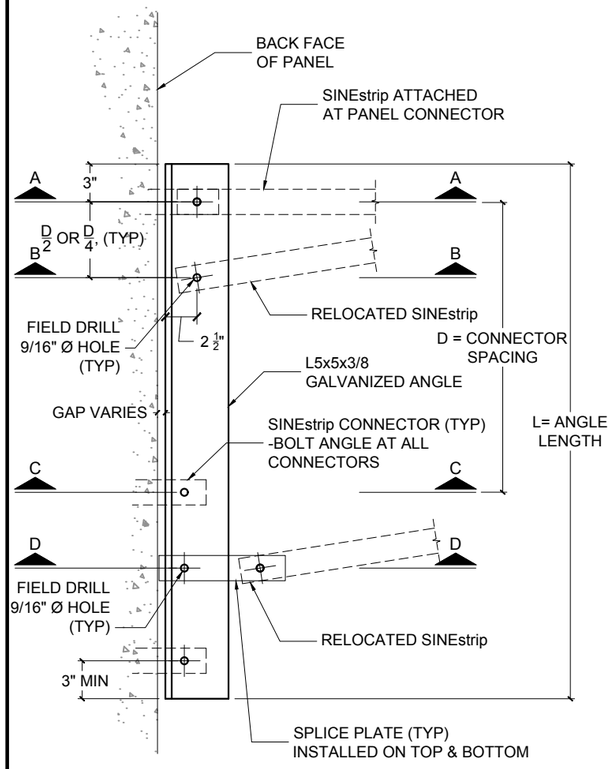

TOP VIEW

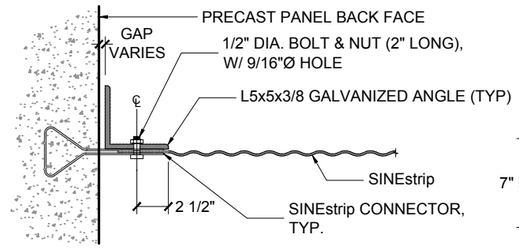

'A-A' SECTION VIEW (AT CONNECTOR)

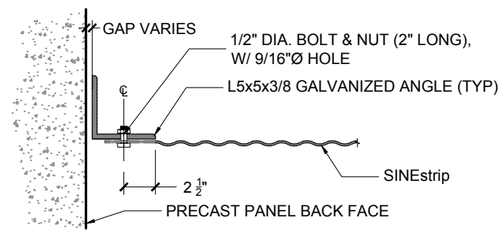

'B-B' SECTION VIEW

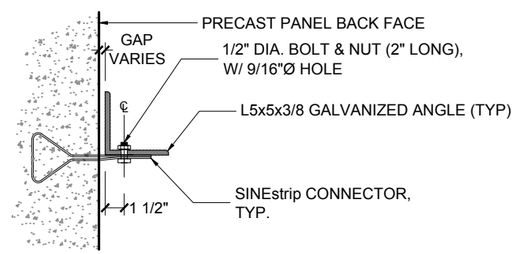

'C-C' SECTION VIEW (AT CONNECTOR, NO STRIP)

TYPE "A" CONNECTION DETAIL

SINGLE SHEAR CONNECTION (NO SCALE)

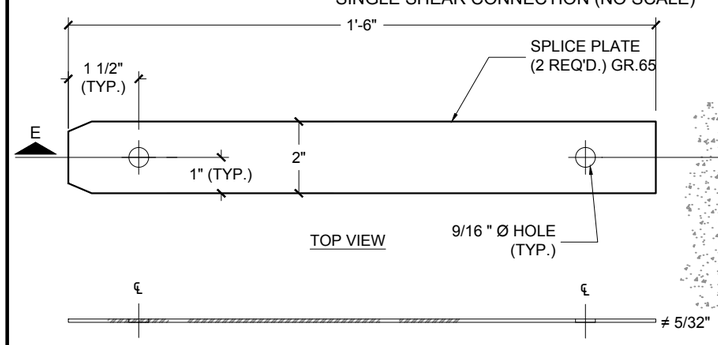

TOP VIEW

SECTION VIEW 'E-E'

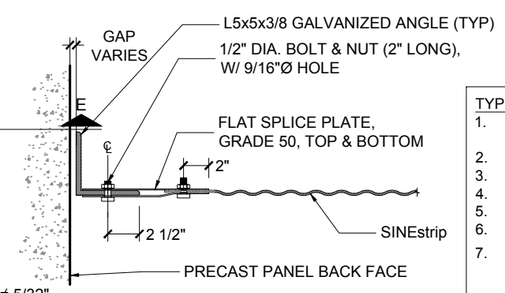

'D-D' SECTION VIEW (SIMILAR TO SECTION 'A-A', 'B-B', 'C-C'

TYPE "B" CONNECTION DETAIL -SPLICE PLATES

DOUBLE SHEAR CONNECTION (NO SCALE)

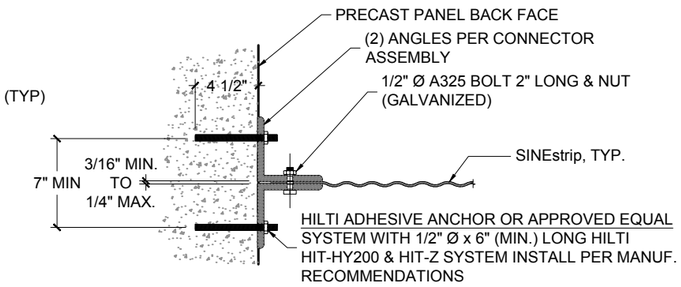

NEW CONNECTOR ASSEMBLY SECTION

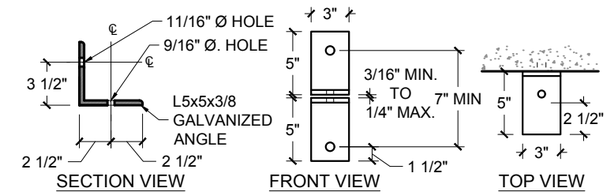

SECTION VIEW FRONT VIEW TOP VIEW

INSTALLATION NOTES:
- THE CONTRACTOR SHALL FOLLOW THE MANUFACTURER RECOMMENDATIONS FOR DRILLING, HOLE CLEANING, EPOXY APPLICATION AND DRYING TIME.
- TYPE "C" CONNECTIONS SHALL NOT BE ATTACHED TO ANGLES SPANNING SINEconnectors, REFERENCE TYPE "C" CONNECTION DETAIL -EPOXY ANCHOR.

TYPE "C" CONNECTION DETAIL - EPOXY ANCHOR

NO SCALE

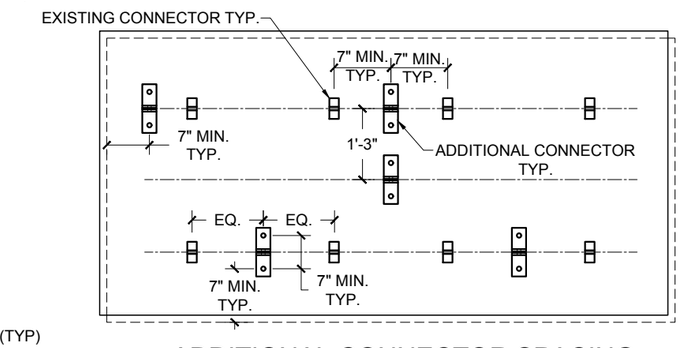

ADDITIONAL CONNECTOR SPACING

NO SCALE

TYPICAL NOTES:
1. SEE CONNECTION DETAILS. ANGLE SCHEDULE AND ALL ASSOCIATED NOTES SPECIFIC TO EACH PROJECT
2. ALL ANGLES ARE GRADE 36 STEEL.
3. CONTRACTOR TO FIELD CUT ANGLES TO LENGTH BASED ON MINIMUM DIMENSIONS SHOWN.
4. ADD SAME NUMBER OF STRIPS TO ANGLE THAT ARE OBSTRUCTED BY STRUCTURE, MINIMUM
5. MINIMUM OF 2 CONNECTORS ATTACHED TO ANGLE.
6. STRIPS MAY SKEW 15°
7. ALL STRIPS SHALL BE EITHER $\frac{D}{4}$ OR $\frac{D}{2}$ AWAY FROM CONNECTOR, REFERENCE ANGLE SCHEDULE.
   D=CONNECTOR SPACING
   L=D+6" OR 2D+6"
8. WHEN 3 STRIPS ARE OBSTRUCTED, REPLACE WITH 4 STRIPS ANCHORED TO THE ANGLE AS SHOWN.
9. CONNECT UP TO TWO ADDITIONAL SINEstrips ON EACH SIDE OF OBSTRUCTION. EACH SIDE OF STRUCTURE WILL HAVE EITHER ONE OR TWO SINEstrip(s) TO ENSURE BALANCED LOADING.
10. ANGLES SHALL NOT BE CANTILEVERED IN ANY FASHION.

NOTE:
IF SKEW IS GREATER THAN 15º CONTACT A SINE WALL REPRESENTATIVE

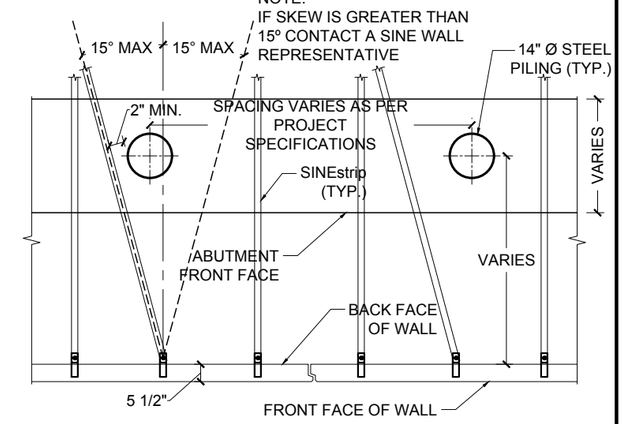

TYPICAL SKEWED CONFIGURED STRIP

VERTICAL OBSTRUCTION - NO SCALE

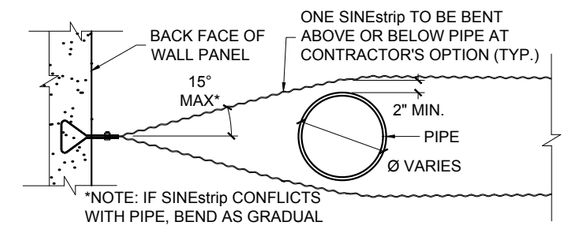

*NOTE: IF SINEstrip CONFLICTS WITH PIPE, BEND AS GRADUAL AS POSSIBLE

TYPICAL STRIP BENDING DETAIL

NO SCALE

9/21/2017

COMMONWEALTH OF PENNSYLVANIA
DEPARTMENT OF TRANSPORTATION
BUREAU OF PROJECT DELIVERY

STANDARD
MECHANICALLY STABILIZED EARTH RETAINING WALLS
SINE WALL® MSE PANEL SYSTEM

TYPICAL OBSTRUCTION DETAILS

PENNDOT DRAWING # 2015-110

Product:

Item 8550-xxxx – Con/Span Precast Structure Standard
Contech Engineered Solutions LLC
PennDOT Drawing # 86-353 PE (Change #2)

Approval Date:	**Initiated By SOL:**
September 21, 2017	483-17-4

Application/Use:

Con/Span Precast Structure Standard developed by Contech Engineered Solutions LLC has been approved for use as "Alternate" structure or "As-designed" structure. Detached headwalls, counterforts and the connection details to Con/Span Precast Structure are patented items and can only be used as "Alternates". The use as an "Alternate" or "As-designed" structure is at the discretion of the District Executive.

Detached headwall and details of connection to Con/Span Precast Structure shown on Sheet 8 of Con/Span Precast Structure Standard Drawings are patented items. Counterfort for precast headwall and details of connection to Con/Span Precast Structure shown on Sheet 9 of Con/Span Precast Structure Standard Drawings are patented items.

The patent number of above items is US 7,556,451.

Con/Span Precast Structure Standard's usage has the following restrictions:
Maximum clear span length: 60 feet.

Minimum top fill cover from top of the precast arch unit crown to top of pavement:

- 10 inches for arch span length of 48 feet or less;
- 2 feet 6 inches for arch span length of 54 feet or 60 feet.

This standard meets both AASHTO and Design Manual, Part 4 design criteria.

Specifications:

Design/Material/Construction Specifications for this standard are specified on PennDOT Drawing # 86-353 PE (Change 2), dated September 21, 2017, of Con/Span Precast Structure Standard for your use.

Comments:

On those projects permitting the use of this system as an alternate, a special provision should be included in the proposal to indicate that the "Con/Span Precast Structure" as an alternate is allowed.
The contractor will be required to revise the pertinent contract drawings as per DM-4, PP 1.10 to show the usage of "Con/Span Precast Structure" and will also be required to reimburse the Department a fee of $1,000 per design for the review and approval of the revision. This should be specified in the contract's Special Provisions.

DESIGN SPECIFICATIONS FOR CON/SPAN PRECAST CONCRETE STRUCTURE

1. GENERAL:

A. CON/SPAN BRIDGE SYSTEMS' REPRESENTATIVE TO PREPARE THE DESIGN CALCULATIONS OF PRECAST CONCRETE ARCH SYSTEM (INCLUDING ARCH UNITS AND PRECAST HEADWALLS AND WINGWALLS, IF SPECIFIED) IN ACCORDANCE WITH GUIDELINES SPECIFIED HEREIN AND AS INDICATED ON THE STANDARD DETAIL DRAWINGS (DRAWING # 86-353 PE [CHANGE #2]). SUBMIT DESIGN PROCEDURES OR PERMISSIBLE VARIATIONS OTHER THAN THOSE CONTAINED HEREIN FOR APPROVAL TO BUREAU OF DESIGN, BRIDGE DIVISION, HARRISBURG, PENNSYLVANIA.

B. CON/SPAN PRECAST BRIDGES WILL BE LIMITED TO SPANS NOT TO EXCEED 60'-0" FOR NON-NHS AND NHS SYSTEMS.

2. DESIGN:

A. SECURE DISTRICT BRIDGE AND GEOTECHNICAL (SOILS) ENGINEERS' APPROVAL BEFORE INCORPORATING CON/SPAN PRECAST BRIDGES IN ANY PROJECT.

B. PROVIDE AT NO EXPENSE TO THE DEPARTMENT FOUR SETS (THREE SETS TO DISTRICT AND ONE SET TO CENTRAL OFFICE BRIDGE DIVISION) OF CONSTRUCTION DRAWINGS (22" x 36") & CALCULATIONS. PROVIDE APPROVED DRAWINGS, USING DEPARTMENT DRAFTING STANDARDS. SHOW A PROFESSIONAL ENGINEER'S SEAL LICENSED IN PENNSYLVANIA, WITH A VALID SIGNATURE IN INK, THE DATE SIGNED, A BUSINESS NAME AND BUSINESS ADDRESS, ON THE FIRST SHEET OF THE DESIGN DRAWINGS, USE REPRODUCIBLE DRAWINGS FURNISHED BY THE DEPARTMENT. THE DISTRICT BRIDGE ENGINEER WILL SIGN THE FINAL DESIGN PLANS.

INCLUDE THE FOLLOWING STATEMENT ON THE FIRST SHEET OF THE DRAWINGS ABOVE THE P.E. SEAL: "I HEREBY CERTIFY THAT ALL DESIGN ASSUMPTIONS HAVE BEEN VALIDATED EITHER THROUGH CONSTRUCTION DETAILS OR NOTES ON THESE DRAWINGS OR THROUGH THE CONTRACT PLANS AND PROVISIONS."

C. ON THE FIRST SHEETS OF THE COMPUTATIONS, SHOW A PROFESSIONAL ENGINEER'S SEAL (LICENSED IN PENNSYLVANIA), SIGNATURE AND THE DATE SIGNED. CON/SPAN BRIDGE SYSTEM PARAMETERS, AND OTHER LIMITATIONS ON FILL HEIGHTS ARE AS PER MANUFACTURER'S STANDARD DRAWINGS.

D. IN THE EVENT THAT CERTAIN DESIGN PARAMETERS, STRESSES OR SPECIFICATIONS ARE IN CONFLICT, THE FOLLOWING ORDER OF PREDOMINANCE GOVERNS:

1. DESIGN REQUIREMENTS LISTED IN "SPECIAL DRAWINGS AND SPECIAL DESIGN REQUIREMENTS" (PART B) OF THE SPECIAL PROVISION.

2. DESIGN RELATED STRIKE OFF LETTERS IN EFFECT ON THE DATE OF PROJECT ADVERTISEMENT. REFER TO THE LIST IN PART B.

3. PADOT - DESIGN MANUAL PART 4 (STRUCTURES)

4. PADOT - DESIGN STANDARDS

5. AASHTO LRFD BRIDGE DESIGN SPECIFICATIONS (7th EDITION)

E. IN THE EVENT THAT A CLEAR ORDER OF PREDOMINANCE CANNOT BE ESTABLISHED OR A DIFFERENCE IN THE INTERPRETATION OF THE DESIGN CANNOT BE SOLVED, THE CHIEF BRIDGE ENGINEER IS TO BE ARBITER AND HIS DECISION IS TO BE FINAL.

F. DESIGN AND RATE THE PRECAST ARCH SEGMENTS FOR PHL93 AND P-82 LOADING. COMPLY WITH THE DESIGN CRITERIA IN DESIGN MANUAL PART 4M STRUCTURES, THE AASHTO LRFD BRIDGE DESIGN SPECIFICATIONS, AND AS SPECIFIED, SUBJECT TO EXCEPTIONS AND/OR ADDITIONS UNDER "SPECIAL DRAWINGS AND SPECIAL DESIGN REQUIREMENTS" (PART B).

G. CHECK FOUNDATION PRESSURE, SCOUR AND SETTLEMENT TO ENSURE THAT NO FOUNDATION FAILURE OCCURS. PREFERABLY, PROVIDE FOOTING ON NON-YIELDING FOUNDATION MATERIAL. HOWEVER, ALLOWABLE DIFFERENTIAL SETTLEMENT FOR FOOTING ON SOIL SUPPORTING THE CON/SPAN STRUCTURE = 0.002 FT. PER FT. (MAX.) OF THE SPAN. DESIGN STRUCTURE COMPONENTS TO RESIST FORCES CAUSED BY THIS DIFFERENTIAL SETTLEMENT. ADEQUATELY REINFORCE THE ENTIRE FOOTING AS REQUIRED BY THE DESIGN.

H. DO NOT REDUCE THE ORIGINAL HORIZONTAL AND VERTICAL CLEARANCES AND/OR THE WATERWAY OPENING. DO NOT CHANGE THE ROADWAY GRADE AND/OR ALIGNMENT.

I. THE CURB AND PARAPET ARE TO MEET THE DEPARTMENT STANDARD SHAPE, SIZE AND REINFORCEMENT. ALL REINFORCEMENT BARS IN THE CURB AND PARAPET ARE TO BE EPOXY COATED.

J. PROVIDE MINIMUM COVER OF 10" FROM TOP OF THE PRECAST ARCH UNIT CROWN TO TOP OF PAVEMENT FOR ARCH CLEAR SPAN LENGTH OF 48' OR LESS; PROVIDE MINIMUM COVER OF 2'-6" FROM TOP OF THE PRECAST ARCH UNIT CROWN TO TOP OF PAVEMENT FOR ARCH CLEAR SPAN LENGTH OF 54' OR 60'.

K. DO NOT CHANGE BOTTOM OF FOOTING ELEVATION, UNLESS AUTHORIZED BY THE DISTRICT BRIDGE ENGINEER/DISTRICT GEOTECHNICAL (SOILS) ENGINEER.

L. PROVIDE A SUITABLE DRAINAGE PIPE ALONG THE CULVERT AND WINGWALLS TO RELEASE HYDROSTATIC PRESSURE. ALTERNATIVELY WEEPHOLES IN ARCH UNITS AND WINGWALLS MAY BE PROVIDED TO RELEASE HYDROSTATIC PRESSURE. WHERE SIGNIFICANT SEEPAGE OR RELATIVELY RAPID ACCUMULATION OF WATER IS ANTICIPATED BEHIND THE WALL, INCORPORATE DRAINAGE PIPE AS SPECIFIED, INTO THE 2'-0" MINIMUM WIDTH OF SELECT BACKFILL, WRAP WITH GEOTEXTILE FABRIC, BEHIND THE WALL TO IMPROVE DRAINAGE CONDITIONS. DIRECT SEEPAGE FROM DRAINAGE PIPE TO WEEP HOLES ALONG THE EXTERIOR FACE OF THE WALL OR TO THE STORM WATER CONVEYANCES.

M. PLACE FOOTINGS BELOW SCOUR AND FROST DEPTHS. USE PADOT - CRITERIA IN DETERMINING SCOUR DEPTH. PLACE BOTTOM OF FOOTING AT A MINIMUM DEPTH EQUAL TO PREVAILING FROST DEPTH OR SCOUR DEPTH BUT NOT LESS THAN 3'-0" BELOW GROUND ELEVATION UNLESS CONSTRUCTED ON ROCK FOUNDATION OR OTHERWISE INDICATED. IF NON-YIELDING MATERIAL IS FOUND ABOVE THE SCOUR DEPTH, THE HEIGHT OF NON-YIELDING MATERIAL WILL GOVERN.

N. PROVIDE PRECAST OR CAST-IN-PLACE PARAPETS, BARRIERS.

FOUNDATION CONNECTION PLATES

O. PROVIDE ~~DUCTILE JOINT SYSTEM~~ BETWEEN VERTICAL LEG OF THE PRECAST SEGMENT AND FOOTER AS INDICATED ON THE STANDARD DETAIL DRAWINGS WHEN POST TENSIONING NOT UTILIZED.

P. POST TENSIONING IS REQUIRED FOR CON/SPAN ON NHS. POST TENSIONING IS REQUIRED FOR CON/SPAN ON NON-NHS SYSTEMS UNDER FILL LESS THAN 2 FEET. POST TENSIONING REQUIREMENT FOR CON/SPAN ON NON-NHS SYSTEMS UNDER FILL GREATER THAN AND EQUAL TO 2 FEET IS AT THE DIRECTION OF THE DISTRICT BRIDGE ENGINEER.

GENERAL NOTE 2.O WAS MODIFIED BY BRIDGE DESIGN & TECHNOLOGY DIVISION ON 2-22-18.

THIS DRAWING IS THE PROPERTY OF CONTECH ENGINEERED SOLUTIONS, LLC, IT IS MADE FOR THE EXCLUSIVE USE OF CONTECH ENGINEERED SOLUTIONS, LLC. NEITHER THE DRAWING OR REPRODUCTION OF IT NOR INFORMATION DERIVED FROM IT IS TO BE GIVEN TO OTHERS WITH THE EXPRESSED CONSENT OF CONTECH ENGINEERED SOLUTIONS, LLC. NO USE IS TO BE MADE OF IT WHICH IS OR MAY BE IN ANY WAY INJURIOUS TO AND/OR CONTRARY TO THE INTERESTS OF CONTECH ENGINEERED SOLUTIONS, LLC. CONTECH ENGINEERED SOLUTIONS, LLC MAKES NO REPRESENTATION OR WARRANTIES AS TO ANY USE OF THIS DRAWING OTHER THAT WHICH CONTECH ENGINEERED SOLUTIONS, LLC ORIGINALLY INTENDED.

9 / 21 / 2017

PENNSYLVANIA
DEPARTMENT OF TRANSPORTATION
RECOMMENDED

Thomas P Macioce

CHIEF BRIDGE ENGINEER

8/29/2017

COMMONWEALTH OF PENNSYLVANIA
REGISTERED PROFESSIONAL
PHILIP ALAN CREAMER
ENGINEER
NO. PE-076081

'I CERTIFY THAT ALL DESIGN ASSUMPTIONS HAVE BEEN VALIDATED EITHER THROUGH CONSTRUCTION DETAILS, SPECIAL NOTES, AND/OR INSTRUCTIONS TO THE FABRICATOR, ERECTOR, AND CONTRACTOR"

Mark	Description	By	Chk'd.	Recm'd.	Date

REVISIONS

CONTECH ENGINEERED SOLUTIONS LLC
9025 CENTRE POINTE DR. WESTCHESTER, OHIO 45069
(513) 645-7000

CON/SPAN PRECAST STRUCTURE
STANDARD DETAIL DRAWING

PADOT DWG. # 86-353 PE (Change #2)

CONSTRUCTION SPECIFICATIONS FOR CON/SPAN PRECAST CONCRETE STRUCTURE

1. DESCRIPTION

THIS WORK IS THE FURNISHING AND CONSTRUCTING OF CON/SPAN BRIDGE SYSTEM (PRECAST ARCH UNITS, HEADWALLS & WINGWALLS) INCLUDING EXCAVATION OF ON-SITE SOILS AND PLACEMENT AND COMPACTION OF STRUCTURAL AND RANDOM BACKFILL, IN CONFORMITY WITH THE LINES, GRADES, DIMENSIONS, LOCATIONS, AND SECTIONS SHOWN ON THE APPROVED DRAWINGS AND IN ACCORDANCE WITH THE CONTRACT DOCUMENTS AND THE REQUIREMENTS SET FORTH HEREIN.

2. MATERIALS

A. PROVIDE MATERIALS AND WORKMANSHIP IN ACCORDANCE WITH PUBLICATION 408, AND SUPPLEMENTS THERETO, AND/OR SPECIAL CONDITIONS AS SPECIFIED HEREIN.

B. PRECAST CONCRETE PRODUCTS. SECTION 714 AND AS FOLLOWS:

1. CONCRETE COMPONENTS: PROVIDE CONCRETE IN ACCORDANCE WITH SECTION 704 WITH A MINIMUM 28 DAY COMPRESSIVE STRENGTH OF 5000 PSI. DO NOT PLACE CONCRETE WHEN AMBIENT TEMPERATURES ARE BELOW 40°F OR ABOVE 100°F.

2. CEMENT CONCRETE: SECTION 704. USE CLASS A CONCRETE FOR FOOTINGS AND CLASS AA FOR CURBS AND PARAPETS. DO NOT USE ADMIXTURE CONTAINING CHLORIDES.

C. REINFORCING STEEL: SECTION 709.1(A)1.

D. DEFORMED WELDED WIRE FABRIC: SECTION 709.4. SMOOTH WELDED WIRE FABRIC: SECTION 709. 3.

E. SELECTED BORROW EXCAVATION - STRUCTURAL BACKFILL: PUB. 408 AS SHOWN ON STANDARD DRAWING RC-12. DO NOT USE METALLURGICAL SLAG OR CINDERS OR ANY 'R' CLASS ROCK.

F. GEOTEXTILES: CLASS 4, TYPE A, SECTION 735.

G. JOINT WRAP: ASTM C-877 TYPE I OR C-877 TYPE II, TYPE III (EXCLUDING STEEL STRAPS) WITH PRIMER.

H. MORTAR: SECTION 705.7(A).

I. GROUT: SHALL CONTAIN PORTLAND CEMENT, SAND AND WATER AND SHALL HAVE A MINIMUM COMPRESSIVE STRENGTH OF 4000 PSI AT 28 DAYS.

J. CONCRETE SEALERS: APPROVED BY MTD.

K. PIPE UNDERDRAIN: SECTION 610.2.

L. CERTIFICATION: SECTION 106.03(B)3.

3. FABRICATION, TESTING AND INSPECTION.

A. FABRICATE IN ACCORDANCE WITH APPROVED SHOP DRAWINGS AND APPROVED QUALITY CONTROL PLAN, AND PUB. 408 SECTION 714. MAINTAIN SECONDARY CONCRETE CURE IN A MINIMUM 50°F ENVIRONMENT UNTIL THE UNITS HAVE REACHED A COMPRESSIVE STRENGTH OF 3500 PSI.

B. CONCRETE FINISH. PROVIDE STEEL FORM FINISH FOR THE FRONT FACE. THE REAR FACE SHALL HAVE A FLOATED SURFACE FINISH UNLESS OTHERWISE INDICATED OR SPECIFIED. SCREED TO ELIMINATE OPEN POCKETS OF AGGREGATE AND SURFACE DISTORTIONS IN EXCESS OF 1/4" ON BOTH FACES OF THE PRECAST ARCH UNITS CONCRETE COMPONENTS.

WHEN A SPECIAL OR DECORATIVE SURFACE FINISH IS REQUIRED, DISPLAY THE TYPICAL SAMPLE OF THE FACE SEGMENT SHOWING THE COLOR, TEXTURE AND FINISH FOR APPROVAL.

C. TOLERANCES: MANUFACTURE ALL PRECAST CONCRETE COMPONENTS WITHIN THE FOLLOWING TOLERANCES:

3. THE INTERNAL DIMENSION DOES NOT VARY MORE THAN 1% NOR MORE THAN 1" FROM THE DESIGN DIMENSIONS WHICHEVER IS LESS.

4. THE SLAB AND WALL THICKNESS DO NOT VARY 1/4" LESS THAN THAT SHOWN IN THE DESIGN. A THICKNESS MORE THAN REQUIRED IN THE DESIGN WILL NOT CAUSE REJECTION.

5. THE MAXIMUM VARIATION IN POSITION OF THE REINFORCEMENT IN ANY DIRECTION WILL BE ± 1/2" . IN NO CASE MAY THE COVER OVER THE REINFORCEMENT VARY BY MORE THAN 1/4" FROM THE POSITION SHOWN ON THE APPROVED DRAWINGS. THE COVER AT THE END OF THE REINFORCEMENT WILL BE A MINIMUM OF 1/2" AT THE MATING SURFACES.

6. THE UNDERRUN IN LENGTH OF A SECTION WILL NOT BE MORE THAN 1/2" IN ANY PRECAST ARCH UNIT.

7. THE OUTSIDE DIAGONAL DIMENSIONS SHALL NOT VARY MORE THAN 1% NOR MORE THAN 1" FROM THE DESIGN DIMENSIONS WHICHEVER IS LESS.

8. OTHER TOLERANCES AS INDICATED.

D. REJECT INDIVIDUAL PRECAST CONCRETE COMPONENTS FOR ANY OF THE FOLLOWING:

1. FRACTURES OR CRACKS PASSING THROUGH THE WALL, EXCEPT FOR A SINGLE END CRACK THAT DOES NOT EXCEED ONE HALF THE THICKNESS OF THE WALL.

2. DEFECTS THAT INDICATE PROPORTIONING, MIXING AND MOLDING NOT IN COMPLIANCE WITH THE SPECIFICATION AS SPECIFIED OR INDICATED.

3. HONEYCOMBED OR OPEN TEXTURE.

4. TEST CORE STRENGTH IS LESS THAN DESIGN CONCRETE STRENGTH.

5. DAMAGED ENDS WHERE SUCH DAMAGE WOULD PREVENT MAKING A SATISFACTORY JOINT.

6. DIMENSIONS NOT CONFORMING TO THE ALLOWABLE TOLERANCES AS SPECIFIED.

7. COLOR VARIATION ON FRONT FACE.

MARK THE REJECTED PRECAST CONCRETE COMPONENTS "REJECTED FOR PENNDOT USE" WITH WATERPROOF PAINT.

E. REPAIR AND REPAIR PROCEDURES REQUIRE APPROVAL BY THE ENGINEER.

F. MARK EACH PRECAST ARCH UNIT WITH WATERPROOF PAINT TO SHOW THE FOLLOWING INFORMATION ON THE SURFACE OF THE VERTICAL LEG OF THE UNIT;

- SIZE: SPAN x RISE (IN FEET)
- EARTH COVER (IN FEET)
- DATE OF MANUFACTURE
- NAME OR TRADEMARK OF THE MANUFACTURER

4. CONSTRUCTION

A. IN ACCORDANCE WITH THE APPLICABLE SECTIONS OF THE SPECIFICATIONS, PUBLICATION 408, SUPPLEMENTS THERETO, AND/OR THE SPECIAL PROVISIONS FOR EACH RESPECTIVE ITEM, AND THE ADDITIONAL REQUIREMENTS SPECIFIED HEREIN. SUBMIT CONSTRUCTION PROCEDURES AND PERMISSIBLE VARIATIONS OTHER THAN THOSE CONTAINED HEREIN, FOR APPROVAL.

NO CONSTRUCTION OF THE PRECAST CONCRETE BRIDGE WILL BE PERMITTED WITHOUT THE APPROVED SHOP DRAWINGS.

B. EXCAVATION AND FOUNDATIONS. GRADE THE FOUNDATION FOR THE STRUCTURE LEVEL FOR A WIDTH OF 1'-0" BEYOND THE WIDTH OF THE STRIP FOUNDATION WHEN STRIP FOUNDATIONS ARE UTILIZED. PRIOR TO CONSTRUCTION, EXCEPT WHERE CONSTRUCTED IN ROCK, COMPACT THE FOUNDATION WITH A SMOOTH WHEEL VIBRATORY ROLLER. REMOVE ALL FOUNDATION SOILS DETERMINED BY THE ENGINEER TO BE UNSUITABLE, AND REPLACE WITH GRANULAR MATERIAL (2A). EXCAVATE IN ACCORDANCE WITH SECTION 203 TO THE LIMITS AND CONSTRUCTION STAGES AS INDICATED.

PROVIDE PROPERLY CURED (REACH A MINIMUM COMPRESSIVE STRENGTH OF 2750 PSI BEFORE PLACEMENT OF THE PRECAST CONCRETE COMPONENTS) CAST-IN-PLACE FOOTINGS, IN ACCORDANCE WITH GRADE SHOWN. PROVIDE A SMOOTH FLOAT FINISH TO THE DIMENSIONS AND DETAILS AS INDICATED. IN THE PRECAST ARCH UNIT FOOTINGS, FORM A 3" DEEP KEYWAY IN THE TOP SURFACE, 3" CLEAR OF THE INSIDE AND OUTSIDE FACES OF THE BRIDGE PRIOR TO PLACEMENT OF THE PRECAST CONCRETE SEGMENT, OR AS INDICATED ON THE DESIGN DRAWINGS. NO KEYWAY IS REQUIRED IN THE PRECAST WINGWALL FOOTING.

C. ERECTION OF PRECAST ARCH UNITS: INSTALL PRECAST ARCH UNITS IN ACCORDANCE WITH THE MANUFACTURER'S RECOMMENDATIONS AS SHOWN ON THE APPROVED SHOP DRAWINGS.

SHIPPING AND PLACEMENT CABLES ARE PROVIDED IN PRECAST ARCH UNITS WITH SPANS GREATER THAN 24'-0", TO PREVENT THE LEGS FROM SPREADING DURING HANDLING AND TRANSPORTATION. THESE HANDLING CABLES SHOULD NOT BE REMOVED UNTIL AFTER THE PRECAST ARCH UNIT IS PLACED AND GROUTED. IF THESE CABLES MUST BE REMOVED PRIOR TO PLACEMENT. CON/SPAN MANUFACTURER MUST BE CONSULTED FOR ALTERNATE RECOMMENDED PROCEDURE.

TAKE SPECIAL CARE IN SETTING THE PRECAST ARCH UNITS TO THE TRUE LINE AND GRADE. PLACE PRECAST ARCH UNITS ON 5" x 5" HARDBOARD SHIMS. PROVIDE A MINIMUM OF A 1/2" GAP AND A MAXIMUM OF 2" BETWEEN THE FOOTING AND THE BOTTOM OF THE PRECAST ARCH UNITS VERTICAL LEGS. FILL GAP WITH APPROVED CEMENT GROUT OR CEMENT MORTAR.

DO NOT EXCEED 3/4" JOINT WIDTH BETWEEN ADJACENT PRECAST ARCH UNITS.

CLEAN DIRT AND DELETERIOUS SUBSTANCES FROM THE SURFACES AND JOINTS. IN THE RECESS FORMED BY THE CHAMFER ON THE EDGES OF THE PRECAST ARCH UNITS, PLACE A 7/8" x 1 3/8" STRIP OF BUTYL ROPE ALONG THE ENTIRE LENGTH OF THE JOINT EXTERIOR. COVER THE ARCH-UNIT JOINT EXTERIOR WITH A MINIMUM OF A 9" WIDE JOINT WRAP. COVER THE JOINT CONTINUOUSLY TO THE BOTTOM OF THE LEGS. WHERE REQUIRED, LAPS IN THE JOINT WRAP SHALL RUN DOWNHILL. EXERCISE EXTRA CARE DURING BACKFILLING TO KEEP THE JOINT WRAP IN ITS PROPER LOCATION OVER THE JOINT.

COVER THE REAR FACE OF THE JOINT BETWEEN THE PRECAST ARCH UNITS AND PRECAST WINGWALLS WITH A MINIMUM 2'-0" WIDE STRIP OF FILTER FABRIC.

WHEN NOT POST TENSIONED INSTALL ANGLES, MECHANICALLY SECURING PRECAST ARCH UNITS TO CAST-IN-PLACE FOOTINGS. BOLT ANGLE TO PRECAST ARCH UNIT AND USE BASE OF ANGLE AS A TEMPLATE FOR DRILLING ANCHOR HOLES INTO FOUNDATION. USE ADHESIVE ANCHORS FOR SECURING ANGLES TO FOUNDATION.

WHEN APPLICABLE, CONTRACTOR SHALL PROVIDE AND APPLY APPROVED CONCRETE MEMBRANE SEALER, AS RECOMMENDED BY THE SEALER MANUFACTURER, ON THE TOP OF THE PRECAST ARCH UNIT AND THE PRECAST ARCH UNIT JOINT MATING SURFACES, FOR THE FULL LENGTH OF THE STRUCTURE OR THE LIMITS WHICH ARE IN CONTACT WITH THE BACKFILL.

D. BACKFILLING AND COMPACTION: DO NOT PLACE BACKFILL AGAINST ANY INSTALLED STRUCTURAL COMPONENTS UNTIL THEY HAVE BEEN APPROVED BY THE ENGINEER.

PLACE SELECTED BORROW EXCAVATION, STRUCTURE BACKFILL (2A, ~~MODIFIED~~ #57 STONE OR APPROVED ALTERNATE) WITHIN 4'-0" OF EACH SIDE OF THE PRECAST ARCH UNITS AND AS INDICATED IN THE BACKFILL DIAGRAMS (ADJACENT) FOR THE PRECAST ARCH UNITS AND WINGWALLS, AND IN ACCORDANCE WITH THE REQUIREMENT OF SECTION 206.3(B) AND STANDARD RC-12. DO NOT USE ANY 'R' CLASS ROCK FOR STRUCTURE BACKFILL. THE DIFFERENCE IN HEIGHT OF THE COMPACTED BACKFILL ON EACH SIDE OF THE ARCH MUST NOT EXCEED 2'-0". FOR FILL HEIGHTS LESS THAN OR EQUAL TO 2'-0", THE FINISHED GRADE, MINUS THE PAVEMENT THICKNESS, SHALL BE THE BOUNDARY LINE FOR THE C.B.Z. FOR FILL HEIGHTS GREATER THAN 2'-0", CBZ LIMITS SHALL BE 2'-0" ABOVE THE ARCH CROWN.

PLACE AND COMPACT STRUCTURAL AND RANDOM BACKFILL IN ACCORDANCE WITH RC-12 AND SECTION 206.3(B).

ACHIEVE THE BACKFILL COMPACTION WITHIN THE 4'-0" ON EACH SIDE OF PRECAST ARCH UNIT AND OVER THE TOP OF THE PRECAST ARCH UNIT UNTIL IT IS COVERED TO A MINIMUM DEPTH OF 6", AND WITHIN 1'-0" FROM THE BACK OF THE PRECAST WINGWALL ANCHORS, BY USING AT LEAST THREE PASSES WITH LIGHT MECHANICAL TAMPERS, ROLLERS OR VIBRATORY SYSTEM. ACCOMPLISH BACKFILL COMPACTION WITHOUT DISTURBANCE OR DISTORTION OF THE PRECAST CONCRETE COMPONENTS.

E. DRAINAGE. INSTALL PIPE UNDERDRAIN AS INDICATED. SEPARATE ALL INTERFACING MATERIALS OF DISTINCTLY DIFFERENT GRADATION BY USING GEOTEXTILE FILTER FABRIC. (CLASS 2, TYPE A), SUPPLIED BY CONTRACTOR.

F. DEWATERING. FURNISH, INSTALL, OPERATE AND MAINTAIN SATISFACTORY DEWATERING SYSTEMS AS REQUIRED TO MAINTAIN THE SITE IN A DRY AND WORKABLE CONDITION. INCLUDE ALL EQUIPMENT AND MATERIALS, AND CONTINUE AS LONG AS NECESSARY.

G. TECHNICAL ASSISTANCE. HAVE A COMPANY REPRESENTATIVE PRESENT AT THE PROJECT SITE TO ASSIST THE FABRICATOR, CONTRACTOR AND ENGINEER. PROVIDE A TECHNICAL REPRESENTATIVE TO ASSIST IN THE EVENT UNUSUAL PROBLEMS OR SPECIAL CIRCUMSTANCE.

NOTE 2.D WAS MODIFIED TO REFER TO CORRECT SPECIFICATION SECTION BY BRIDGE DESIGN & TECHNOLOGY DIVISION ON 2-22-18.

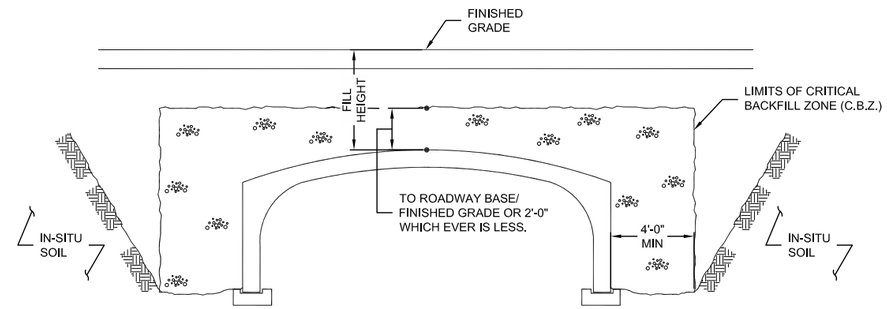

BACKFILL REQUIREMENTS

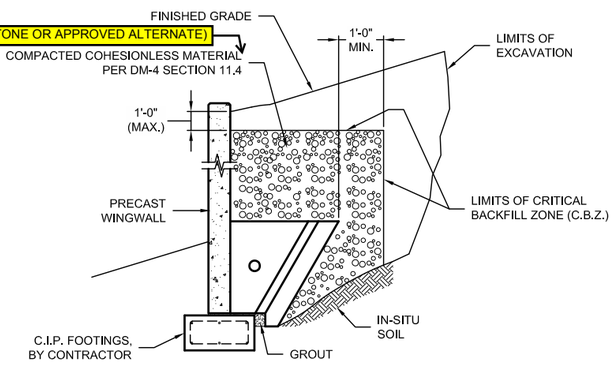

WALL BACKFILL REQUIREMENTS

THIS DRAWING IS THE PROPERTY OF CONTECH ENGINEERED SOLUTIONS, LLC, IT IS MADE FOR THE EXCLUSIVE USE OF CONTECH ENGINEERED SOLUTIONS, LLC. NEITHER THE DRAWING OR REPRODUCTION OF IT NOR INFORMATION DERIVED FROM IT IS TO BE GIVEN TO OTHERS WITH THE EXPRESSED CONSENT OF CONTECH ENGINEERED SOLUTIONS, LLC. NO USE IS TO BE MADE OF IT WHICH IS OR MAY BE IN ANY WAY INJURIOUS TO AND/OR CONTRARY TO THE INTERESTS OF CONTECH ENGINEERED SOLUTIONS, LLC. CONTECH ENGINEERED SOLUTIONS, LLC MAKES NO REPRESENTATION OR WARRANTIES AS TO ANY USE OF THIS DRAWING OTHER THAT WHICH CONTECH ENGINEERED SOLUTIONS, LLC ORIGINALLY INTENDED.

9 / 21 / 2017

Mark	Description	By	Chk'd.	Recm'd.	Date
REVISIONS					

CONTECH ENGINEERED SOLUTIONS LLC
9025 CENTRE POINTE DR. WESTCHESTER, OHIO 45069
(513) 645-7000

CON/SPAN PRECAST STRUCTURE
STANDARD DETAIL DRAWING

PADOT DWG. # 86-353 PE (Change #2)

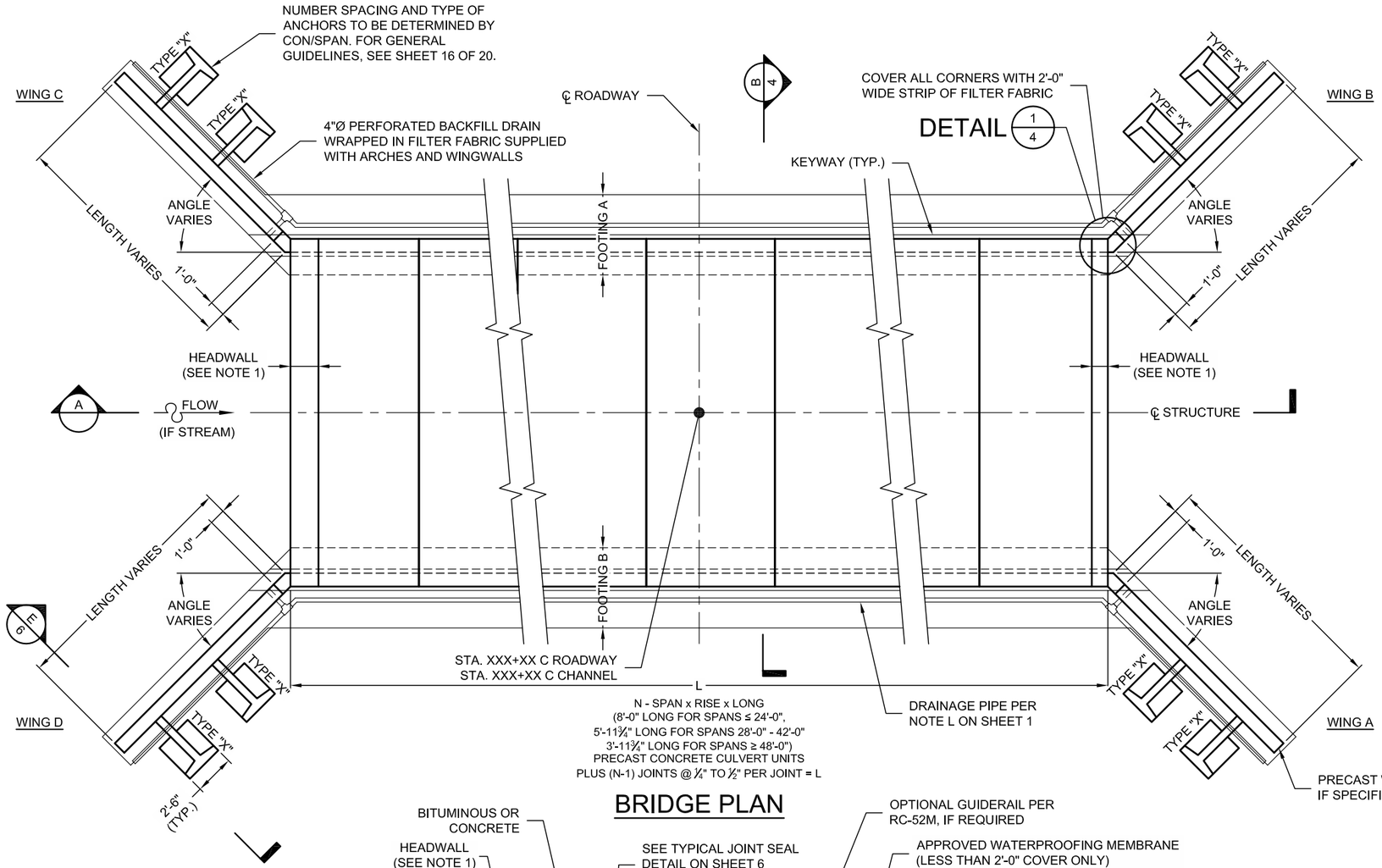

BRIDGE PLAN

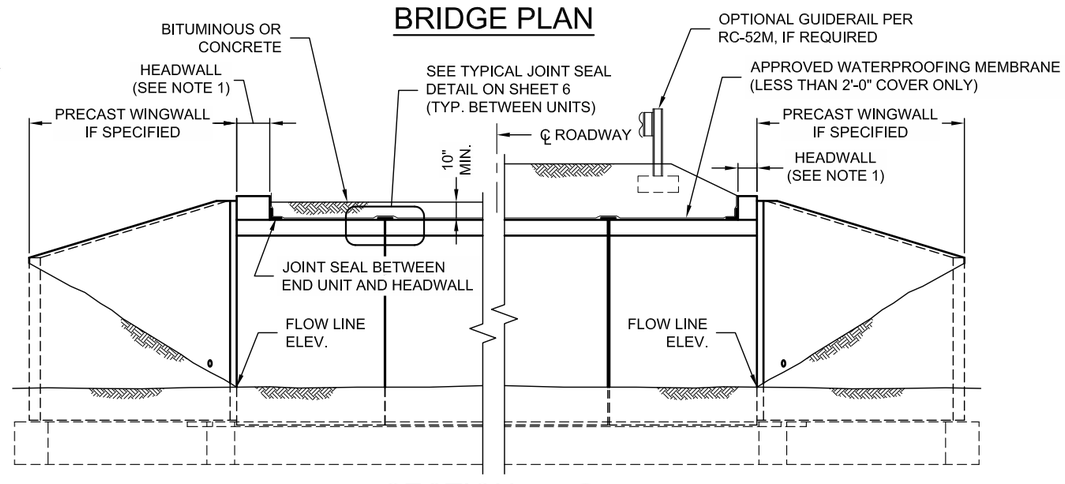

SECTION A

GENERAL NOTES:

-MATERIALS AND WORKMANSHIP SHALL BE IN ACCORANDANCE WITH PENNSYLVANIA DEPARTMENT OF TRANSPORTATION PUBLICATION 408, AND THE CONTRACT SPECIAL PROVISIONS.

-DESIGN SPECIFICATION: DESIGN DIVISION OF 2012 EDITION AASHTO LRFD BRIDGE DESIGN SPECIFICATIONS" AND AS SUPPLEMENTED BY THE PENN. DEPT. OF TRANSPORTATION DESIGN MANUAL, PART 4, STRUCTURES. LOAD RATINGS ACCORDING TO TABLE BELOW SHALL BE PROVIDED BY THE MANUFACTURE AT THE TIME OF FABRICATION DRAWING SUBMITTAL.

CULVERT RATING TABLE (LOAD FACTOR) SPAN W/ FILL						
LOADING / RATING	H20	HS20	ML80	P82	PHL93	TK527
INVENTORY (TONS)						
OPERATING (TONS)						

-USE CLASS A CEMENT CONCRETE IN FOOTING AND WINGWALLS.

-PROVIDE CONCRETE COVER ON REINFORCING BARS AS NOTED HEREIN.

-CHAMFER EXPOSED CONCRETE EDGES ¾" x ¾" EXCEPT AS NOTED.

-FOR FOUNDATION REINFORCEMENT PROVIDE DEFORMED REINFORCEMENT STEEL MEETING THE REQUIREMENTS OF ASTM DESIGNATION 615, OR 617, GRADE 60 AS SET FORTH IN PUBLICATION 408.

-PROVIDE REINFORCEMENT STEEL LAP SPLICE LENGTHS AND EMBEDMENT LENGTHS OF 30 DIAMETERS OR IN ACCORDANCE WITH AASHTO SPECIFICATIONS, WHICHEVER IS GREATER (SEC. BC-736).

-PROVIDE MINIMUM COVER OF 10" (ON 12'-0" - 48'-0" SPANS) & MINIMUM COVER OF 2'-6" (ON 54'-0" & 60'-0" SPANS) FROM TOP OF PRECAST SEGMENT CROWN TO TOP OF FINISHED GRADE.

-FOR ALTERNATE DESIGN PROJECTS, PRECAST STRUCTURE SYSTEM (INCLUDING WINGWALLS AND HEADWALLS) AND FOOTERS WILL BE DESIGNED BY CONTRACTORS.

-FOR AS-DESIGNED PROJECTS, FOOTERS WILL BE DESIGNED BY DESIGNERS OR CONSULTANTS, AND PRECAST STRUCTURE SYSTEM (INCLUDING WINGWALLS AND HEADWALLS, IF SPECIFIED) WILL BE DESIGNED BY THE CON/SPAN MANUFACTURER.

-DESIGN LOADS FOR THE FOOTER'S DESIGN WILL BE PROVIDED BY THE CON/SPAN MANUFACTURER.

-AT ANY TIME DURING PLACEMENT OF THE BACKFILL, DO NOT PERMIT A DIFFERENCE IN FILL ELEVATION ON THE SIDES OF THE CULVERT BARREL IN EXCESS OF 2'-0". DURING COMPACTION OF THE BACKFILL, DO NOT ALLOW THE WHEELS OF ROLLERS TO COME CLOSER THAN 1'-0" TO THE FACE OF THE OF THE STRUCTURE.

-NOTIFY ALL INVOLVED UTILITY COMPANIES PRIOR TO STARTING WORK. UTILITIES WILL NOT BE DISTURBED OR ENDANGERED DURING CONSTRUCTION OPERATIONS.

-WHERE COVER IS LESS THAN OR EQUAL TO 2'-0", PROVIDE FULL WATERPROOFING MEMBRANE BY CONTRACTOR AS PER BC-788M STANDARD DRAWINGS.

-WHEN REQUIRED, THE PRECAST ARCH UNITS SHALL BE POST-TENSIONED, OR OTHERWISE CONNECTED. TYPICAL POST-TENSIONING LOCATIONS ARE SHOWN ON SHEET 6. POST-TENSIONING OR OTHER CONNECTIONS AND DESIGN SHALL BE PER BC-798M. ALL ARCH CONNECTIONS SHALL BE PERFORMED PRIOR TO PLACEMENT OF GROUT BETWEEN THE ARCH LEGS AND THE FOOTING.

NOTE 1:
SEE SHEET 7 THROUGH 10 FOR HEADWALL AND GUIDERAIL OPTIONS, ALTERNATIVES AND FEASIBILITY GUIDELINES.

9 / 21 / 2017

Mark	Description	By	Chk'd.	Recm'd.	Date
REVISIONS					

DESCRIPTION	DWG. NO.
STANDARD ANCHOR SYSTEMS	BC-734M
MECHANICAL CONNECTION DETAILS	BC-798M
TYP. WATERPROOFING AND EXPANSION DETAILS	BC-788M
WALL CONST. & EXPANSION JOINT DETAILS	BC-735M
REINFORCEMENT BAR FABRICATION DETAILS	BC-736M
R.C. BOX CULVERT	BD-632M
R.C. ARCH CULVERT	BD-633M
PA TYPE 10M BRIDGE BARRIER	BD-617M
PA STRUCTURE MOUNTED GUIDE RAIL BARRIER	BD-609M
WINGWALL LENGTH	BD-625M
CONCRETE DECK SLAB	BD-601M
MOMENT SLABS	BD-627M
PA TYPE 10M BRIDGE BARRIER MISC. DETAILS	BC-709M
SUPPLEMENTAL DRAWINGS	

THIS DRAWING IS THE PROPERTY OF CONTECH ENGINEERED SOLUTIONS, LLC, IT IS MADE FOR THE EXCLUSIVE USE OF CONTECH ENGINEERED SOLUTIONS, LLC. NEITHER THE DRAWING OR REPRODUCTION OF IT NOR INFORMATION DERIVED FROM IT IS TO BE GIVEN TO OTHERS WITH THE EXPRESSED CONSENT OF CONTECH ENGINEERED SOLUTIONS, LLC. NO USE IS TO BE MADE OF IT WHICH IS OR MAY BE IN ANY WAY INJURIOUS TO AND/OR CONTRARY TO THE INTERESTS OF CONTECH ENGINEERED SOLUTIONS, LLC. CONTECH ENGINEERED SOLUTIONS, LLC MAKES NO REPRESENTATION OR WARRANTIES AS TO ANY USE OF THIS DRAWING OTHER THAT WHICH CONTECH ENGINEERED SOLUTIONS, LLC ORIGINALLY INTENDED.

CONTECH ENGINEERED SOLUTIONS LLC
9025 CENTRE POINTE DR. WESTCHESTER, OHIO 45069
(513) 645-7000

CON/SPAN PRECAST STRUCTURE
STANDARD DETAIL DRAWING

PADOT DWG. # 86-353 PE (Change #2)

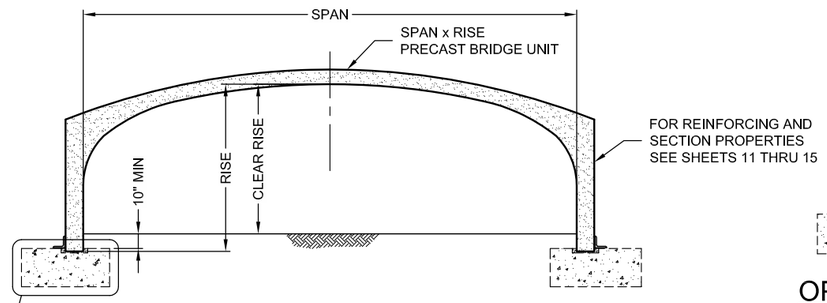

DETAIL 2/4

SPREAD FOOTING SHOWN, OTHER FOUNDATION TYPES POSSIBLE. (FOR PEDESTAL WALL, PILE AND BASE SLAB FOUNDATIONS, SEE EXAMPLES, RIGHT.)

SECTION B/3

NOT TO SCALE

UNIT SPAN	KEYWAY DEPTH
12'-0" TO 48'-0"	3" MIN.
54'-0" & 60'-0"	6" MIN.

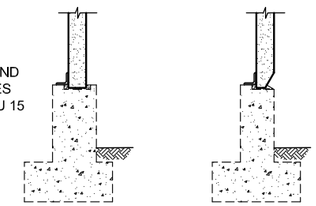

OPTIONAL DETAILS 2

IF PEDESTAL IS REQUIRED

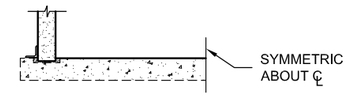

OPTIONAL DETAIL 2

IF BASE SLAB IS REQUIRED

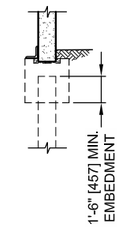

OPTIONAL DETAIL 2

IF PILES ARE REQUIRED

NOTE:
CONNECTION ℙ'S (P-1) MUST BE POSITIONED WITH SMALL Ø HOLES TOWARD PRECAST BRIDGE UNIT

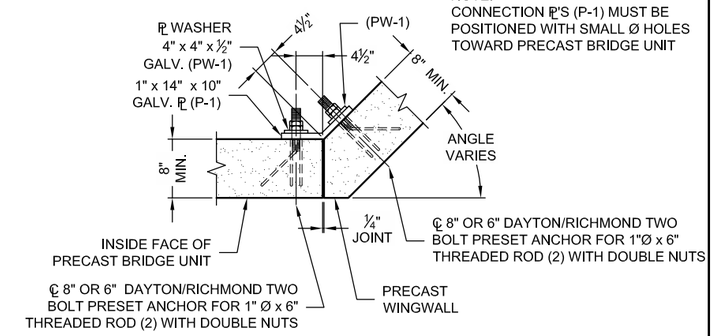

DETAIL 1/3

WINGWALL CORNER
NOT TO SCALE

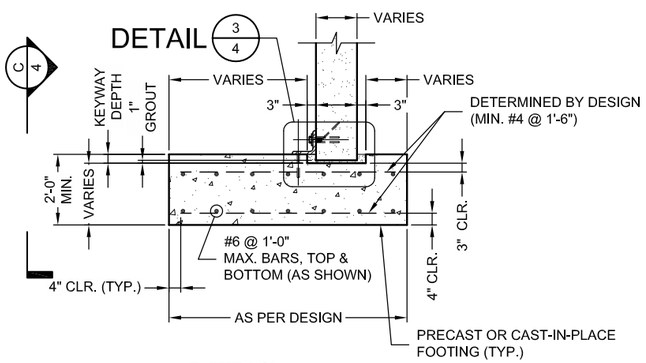

DETAIL 2/4,5

NOT TO SCALE

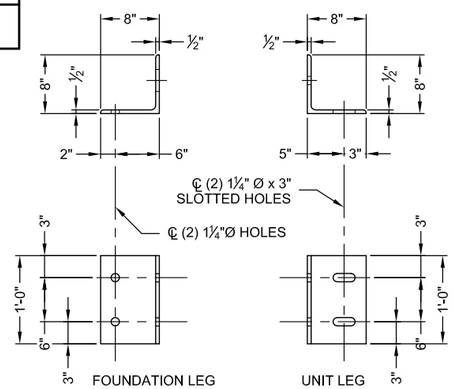

DETAIL 4

FOUNDATION
CONNECTION PLATE
NOT TO SCALE

NOTES:
1. STRUCTURAL STEEL FOR CONNECTION ANGLES SHALL BE ASTM A709 GRADE 36 AND SHALL BE GALVANIZED AS PER ASTM A123.
2. BOLTS AND THREADED RODS SHALL BE ASTM A307. ALL BOLTS, THREADED RODS AND NUTS SHALL BE MECHANICALLY ZINC COATED IN ACCORDANCE WITH ASTM B 695 CLASS 50.

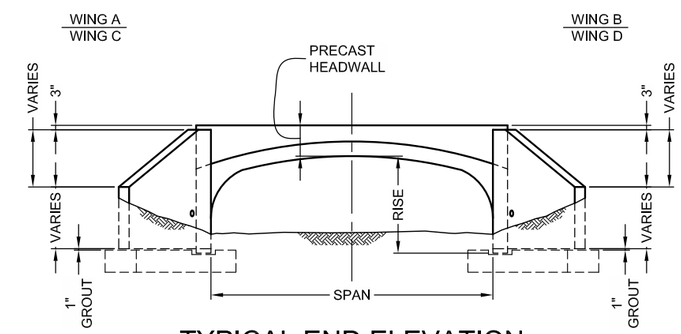

TYPICAL END ELEVATION

NOT TO SCALE

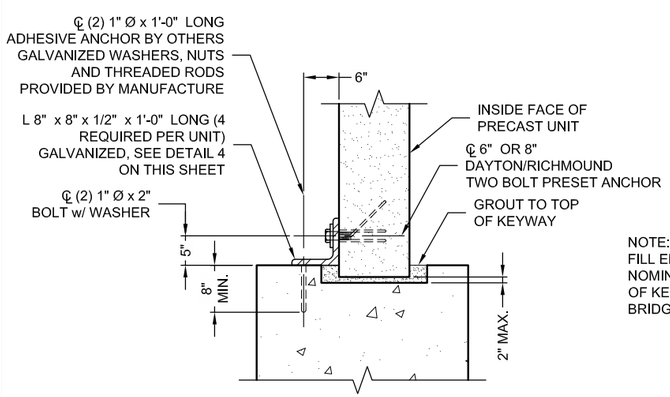

DETAIL 3/4

NOT TO SCALE

NOTE:
FILL ENTIRE KEYWAY INCLUDING NOMINAL 1" VOID BETWEEN BOTTOM OF KEYWAY AND BOTTOM OF PRECAST BRIDGE UNIT LEG WITH GROUT.

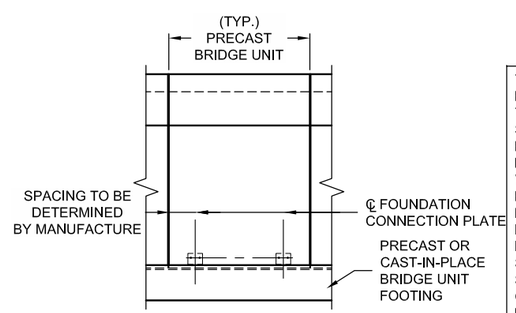

SECTION C/4

NOT TO SCALE

THIS DRAWING IS THE PROPERTY OF CONTECH ENGINEERED SOLUTIONS, LLC, IT IS MADE FOR THE EXCLUSIVE USE OF CONTECH ENGINEERED SOLUTIONS, LLC. NEITHER THE DRAWING OR REPRODUCTION OF IT NOR INFORMATION DERIVED FROM IT IS TO BE GIVEN TO OTHERS WITH THE EXPRESSED CONSENT OF CONTECH ENGINEERED SOLUTIONS, LLC. NO USE IS TO BE MADE OF IT WHICH IS OR MAY BE IN ANY WAY INJURIOUS TO AND/OR CONTRARY TO THE INTERESTS OF CONTECH ENGINEERED SOLUTIONS, LLC. CONTECH ENGINEERED SOLUTIONS, LLC MAKES NO REPRESENTATION OR WARRANTIES AS TO ANY USE OF THIS DRAWING OTHER THAT WHICH CONTECH ENGINEERED SOLUTIONS, LLC ORIGINALLY INTENDED.

9 / 21 / 2017

Mark	Description	By	Chk'd.	Recm'd.	Date
	REVISIONS				

CONTECH ENGINEERED SOLUTIONS LLC
9025 CENTRE POINTE DR. WESTCHESTER, OHIO 45069
(513) 645-7000

CON/SPAN PRECAST STRUCTURE
STANDARD DETAIL DRAWING

PADOT DWG. # 86-353 PE (Change #2)

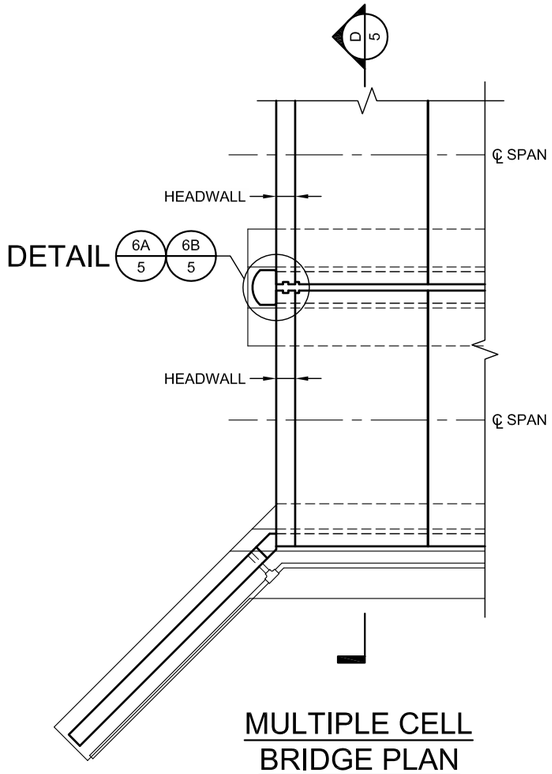

MULTIPLE CELL BRIDGE PLAN

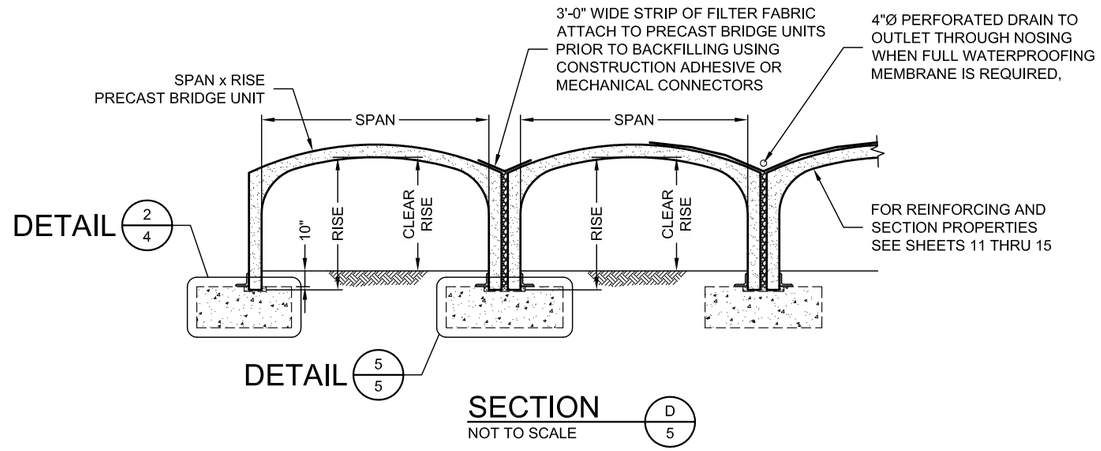

SECTION D/5
NOT TO SCALE

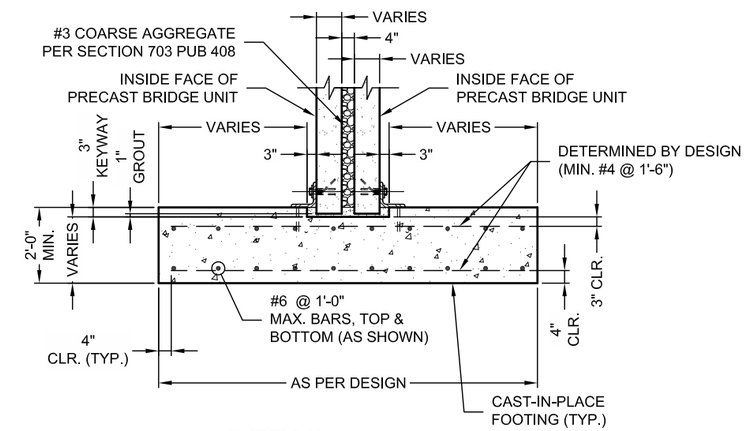

DETAIL 5/5
NOT TO SCALE

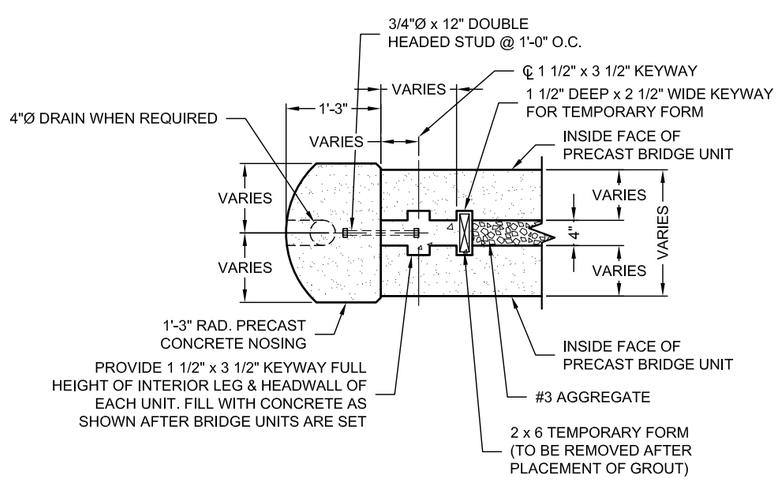

DETAIL @ UNIT LEG 6A/5
NOT TO SCALE

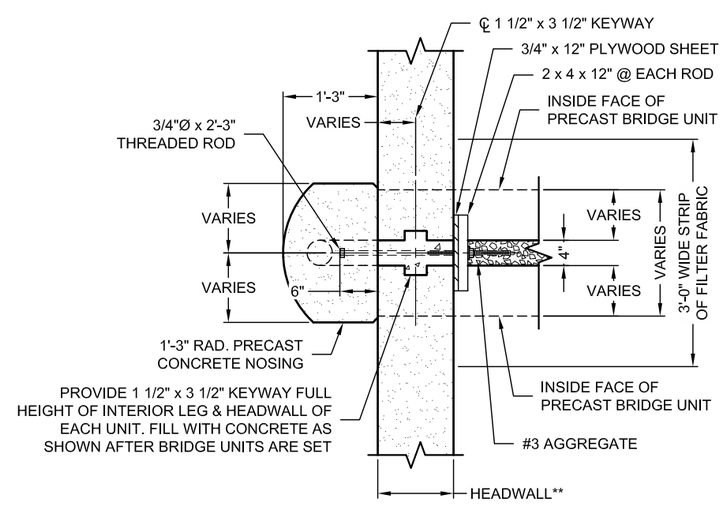

DETAIL @ HEADWALL 6B/5
NOT TO SCALE

MULTIPLE CELL DETAILS

9 / 21 / 2017

THIS DRAWING IS THE PROPERTY OF CONTECH ENGINEERED SOLUTIONS, LLC, IT IS MADE FOR THE EXCLUSIVE USE OF CONTECH ENGINEERED SOLUTIONS, LLC. NEITHER THE DRAWING OR REPRODUCTION OF IT NOR INFORMATION DERIVED FROM IT IS TO BE GIVEN TO OTHERS WITH THE EXPRESSED CONSENT OF CONTECH ENGINEERED SOLUTIONS, LLC. NO USE IS TO BE MADE OF IT WHICH IS OR MAY BE IN ANY WAY INJURIOUS TO AND/OR CONTRARY TO THE INTERESTS OF CONTECH ENGINEERED SOLUTIONS, LLC. CONTECH ENGINEERED SOLUTIONS, LLC MAKES NO REPRESENTATION OR WARRANTIES AS TO ANY USE OF THIS DRAWING OTHER THAT WHICH CONTECH ENGINEERED SOLUTIONS, LLC ORIGINALLY INTENDED.

Mark	Description	By	Chk'd.	Recm'd.	Date

REVISIONS

CONTECH ENGINEERED SOLUTIONS LLC
9025 CENTRE POINTE DR. WESTCHESTER, OHIO 45069
(513) 645-7000

CON/SPAN PRECAST STRUCTURE
STANDARD DETAIL DRAWING

PADOT DWG. # 86-353 PE (Change #2)

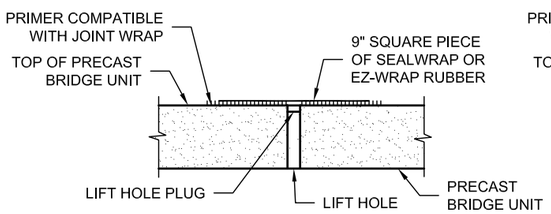

LIFTING HOLES

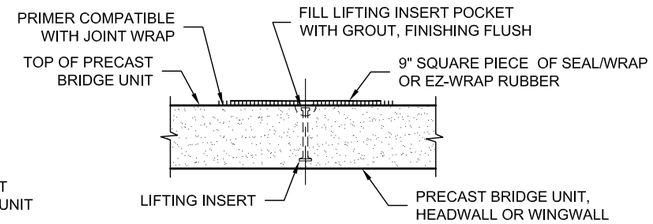

LIFTING INSERTS

TYPICAL LIFT POINT SEALING DETAIL

NOT TO SCALE

NOTE:
REFER TO BC-798M FOR POST-TENSIONING DESIGN INSTRUCTIONS AND CONNECTION DETAILS.

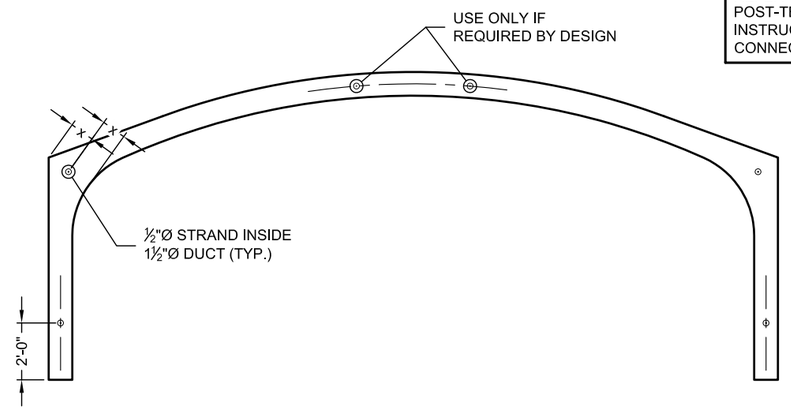

TYPICAL POST-TENSIONING STRAND LOCATIONS, WHERE REQUIRED

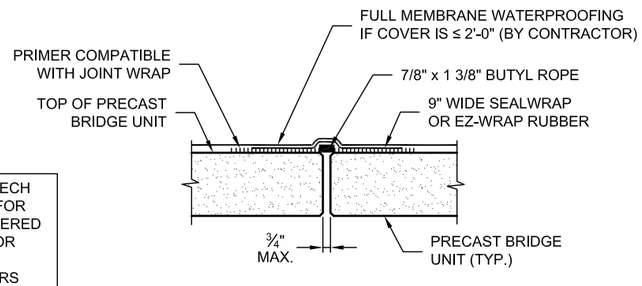

TYPICAL JOINT SEAL DETAIL

NOT TO SCALE

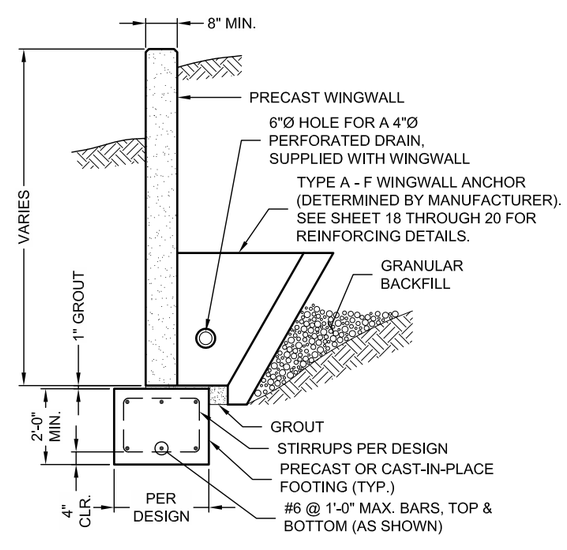

SECTION E/3

NOT TO SCALE

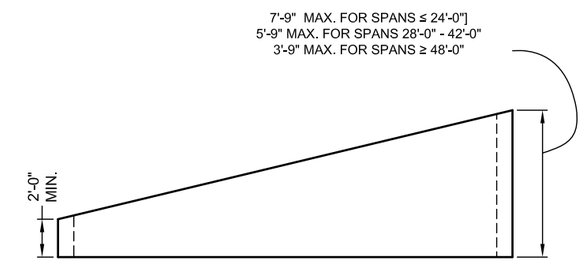

SKEWED UNITS

TYPICAL SKEW LIMITS PLAN VIEW - NOT TO SCALE

NOTE:
IT MAY NOT BE FEASIBLE TO ATTACH HEADWALLS TO SKEWED UNITS, CONSULT WITH CONTECH PRIOR TO FINAL DESIGN

THIS DRAWING IS THE PROPERTY OF CONTECH ENGINEERED SOLUTIONS, LLC, IT IS MADE FOR THE EXCLUSIVE USE OF CONTECH ENGINEERED SOLUTIONS, LLC. NEITHER THE DRAWING OR REPRODUCTION OF IT NOR INFORMATION DERIVED FROM IT IS TO BE GIVEN TO OTHERS WITH THE EXPRESSED CONSENT OF CONTECH ENGINEERED SOLUTIONS, LLC. NO USE IS TO BE MADE OF IT WHICH IS OR MAY BE IN ANY WAY INJURIOUS TO AND/OR CONTRARY TO THE INTERESTS OF CONTECH ENGINEERED SOLUTIONS, LLC. CONTECH ENGINEERED SOLUTIONS, LLC MAKES NO REPRESENTATION OR WARRANTIES AS TO ANY USE OF THIS DRAWING OTHER THAT WHICH CONTECH ENGINEERED SOLUTIONS, LLC ORIGINALLY INTENDED.

9 / 21 / 2017

Mark	Description	By	Chk'd.	Recm'd.	Date
REVISIONS					

CONTECH ENGINEERED SOLUTIONS LLC
9025 CENTRE POINTE DR. WESTCHESTER, OHIO 45069
(513) 645-7000

CON/SPAN PRECAST STRUCTURE
STANDARD DETAIL DRAWING

PADOT DWG. # 86-353 PE (Change #2)

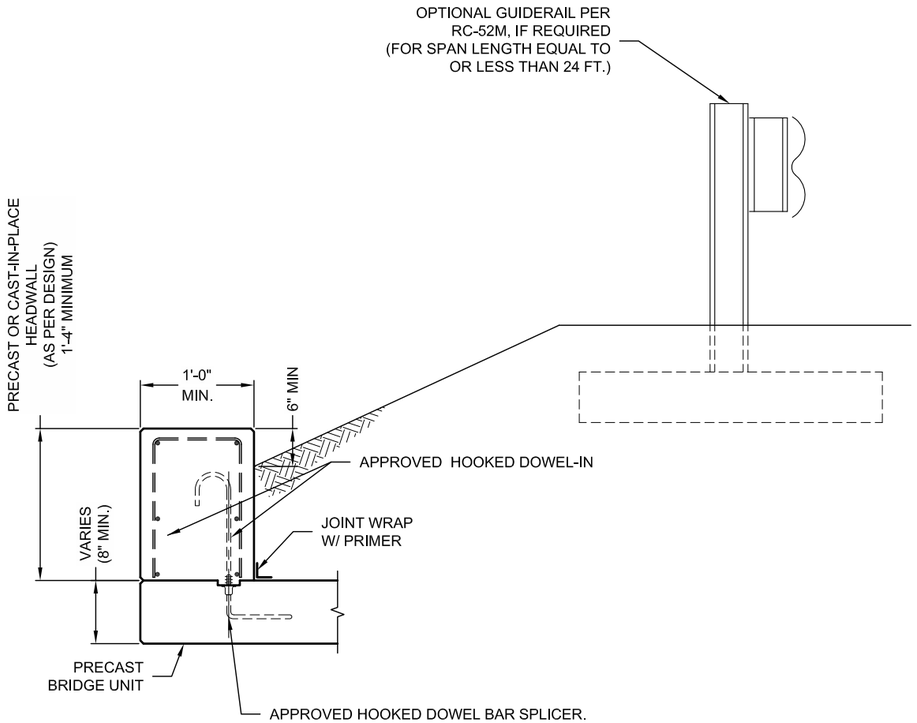

ATTACHED HEADWALL DETAIL

NOTE:
CAST-IN-PLACE HEADWALLS REQUIRE EPOXY BONDING COMPOUND ACCEPTABLE TO THE DEPARTMENT BETWEEN TOP OF ARCH AND CAST-IN-PLACE HEADWALL

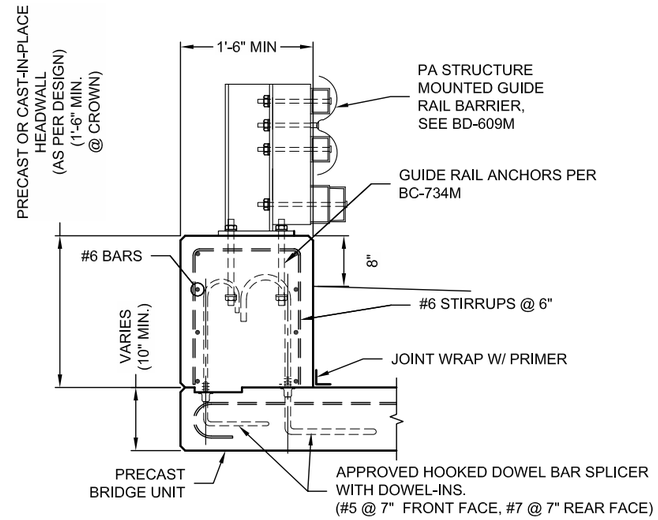

ATTACHED HEADWALL DETAIL

WITH STRUCTURE MOUNTED GUIDERAIL
NOT TO SCALE

HW DESIGN

- ACCEPTABLE ON TANGENT ALIGNMENTS
- MAXIMUM HEIGHT OF HEADWALL AT EDGE OF SPAN IS 5 FEET WITH THIS DETAIL.

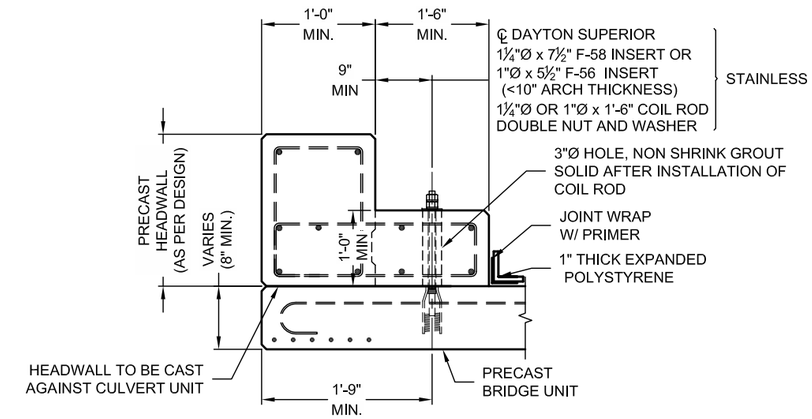

DETACHED COLLAR HEADWALL DETAIL

COLLAR OPTION WITHOUT GUIDERAIL
NOT TO SCALE

COLLAR HW DESIGN

- NO IMPACT MAY BE USED WITH THIS HEADWALL DETAIL
- MAXIMUM HEIGHT OF HEADWALL AT EDGE OF SPAN IS 8 FEET WITH THIS DETAIL
- 1'-0" MIN. HEADWALL THICKNESS
- 1'-0" MIN. COLLAR THICKNESS
- FOR DETACHED HEADWALL DESIGNS ONLY

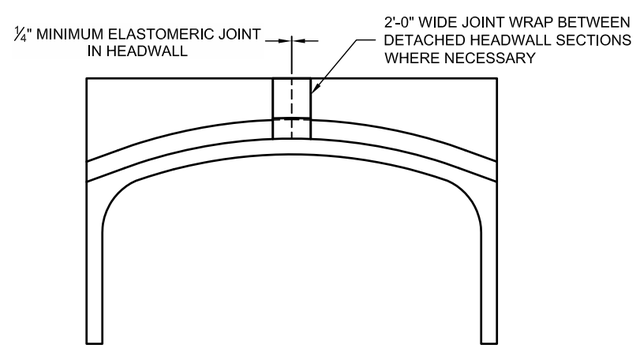

MULTIPLE-PIECE DETACHED HEADWALL JOINT DETAIL

NOT TO SCALE
LOOKING AT BACK FACE OF HEADWALL

NOTE:
ALL HEADWALL REINFORCING AND CONNECTION DETAILS INCLUDING END UNIT STABILITY SHALL BE DETERMINED BY PROJECT-SPECIFIC DESIGN.

NOTE:
HEADWALL REINFORCING SHALL BE EPOXY COATED OR GALVANIZED

THIS DRAWING IS THE PROPERTY OF CONTECH ENGINEERED SOLUTIONS, LLC, IT IS MADE FOR THE EXCLUSIVE USE OF CONTECH ENGINEERED SOLUTIONS, LLC. NEITHER THE DRAWING OR REPRODUCTION OF IT NOR INFORMATION DERIVED FROM IT IS TO BE GIVEN TO OTHERS WITH THE EXPRESSED CONSENT OF CONTECH ENGINEERED SOLUTIONS, LLC. NO USE IS TO BE MADE OF IT WHICH IS OR MAY BE IN ANY WAY INJURIOUS TO AND/OR CONTRARY TO THE INTERESTS OF CONTECH ENGINEERED SOLUTIONS, LLC. CONTECH ENGINEERED SOLUTIONS, LLC MAKES NO REPRESENTATION OR WARRANTIES AS TO ANY USE OF THIS DRAWING OTHER THAT WHICH CONTECH ENGINEERED SOLUTIONS, LLC ORIGINALLY INTENDED.

Mark	Description	By	Chk'd.	Recm'd.	Date

REVISIONS

CONTECH ENGINEERED SOLUTIONS LLC
9025 CENTRE POINTE DR. WESTCHESTER, OHIO 45069
(513) 645-7000

CON/SPAN PRECAST STRUCTURE
STANDARD DETAIL DRAWING

9 / 21 / 2017

PADOT DWG. # 86-353 PE (Change #2)

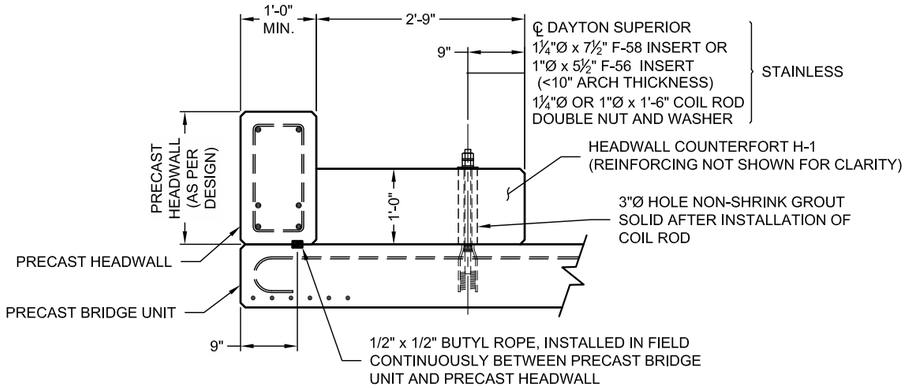

DETACHED HEADWALL DETAIL

H-1 COUNTERFORT OPTION WITHOUT GUIDERAIL
NOT TO SCALE

*IN LOW-COVER SITUATIONS SEMI-ATTACHED HEADWALLS MAY BE NECESSARY

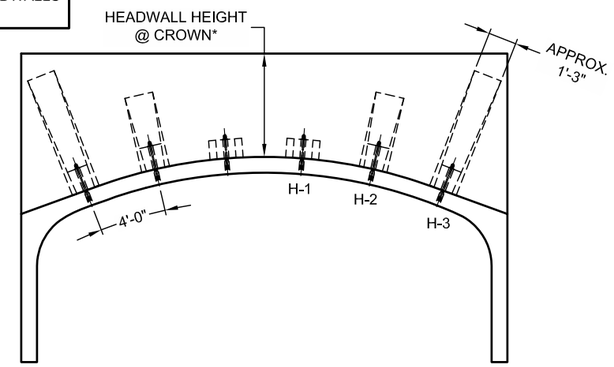

SAMPLE ELEVATION

VIEW

DETACHED HEADWALL FILL-HEIGHT GUIDELINES WITH COUNTERFORTS

	COUNTERFORT	MAX HEADWALL HEIGHT @ COUNTERFORT LOCATION	
		NO SURCHARGE	W/ 3'-0" SURCHARGE
12'-0" AND 14'-0" SPANS	H-1	7'-0"	5'-0"
	H-2	7'-0"	5'-0"
	H-3	8'-0"	6'-0"
16'-0" - 60'-0" SPANS	H-1	8'-0"	6'-0"
	H-2	10'-0"	7'-0"
	H-3	10'-0"	8'-0"

COUNTERFORTS

- ASSUMED 4'-0" SPACING OF COUNTERFORTS
- NO IMPACT MAY BE USED WITH THESE HEADWALL DETAILS
- ADDITIONAL HEADWALL HEIGHT MAY BE ACHIEVED WITH CUSTOM DESIGN. CONTACT CONTECH FOR MORE INFORMATION ON FEASIBILITY
- FOR DETACHED HEADWALL DESIGNS ONLY
- COUNTERFORTS REQUIRED FOR HEADWALL HEIGHTS OVER 8'-0"
- A MINIMUM OF 3 COUNTERFORTS ARE REQUIRED FOR EACH SEGMENT OF PRECAST HEADWALL

NOTE:
THE ACTUAL NUMBER AND TYPE OF PRECAST HEADWALL COUNTERFORTS IS TO BE DETERMINED BY CON/SPAN MANUFACTURER. HOWEVER, USE THE ABOVE CHART AS A GENERAL GUIDE TO FEASIBILITY OF COUNTERFORT USE.

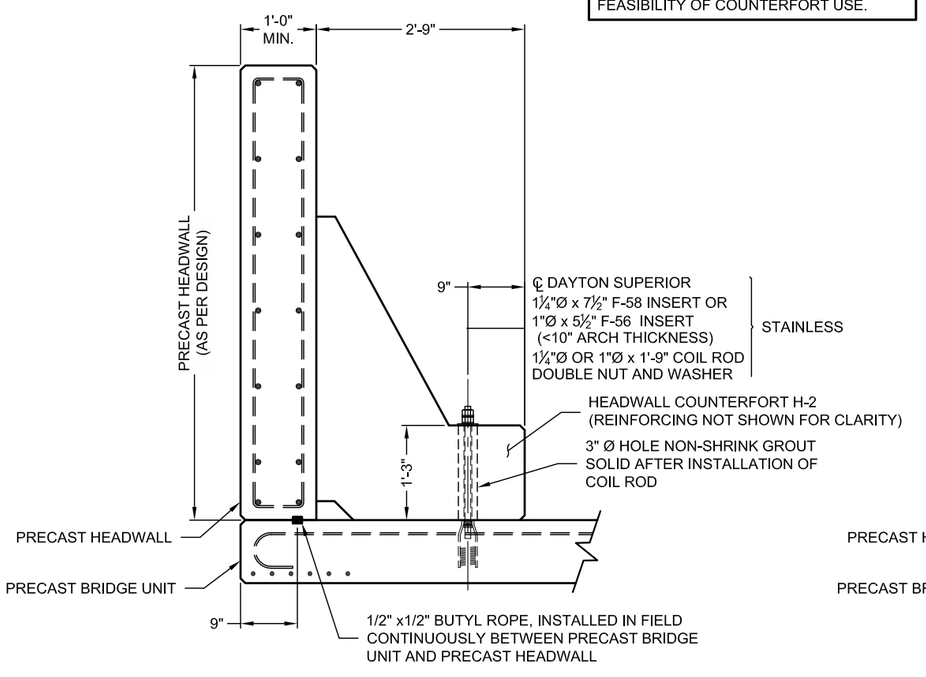

DETACHED HEADWALL DETAIL

H-2 COUNTERFORT OPTION WITHOUT GUIDERAIL
NOT TO SCALE

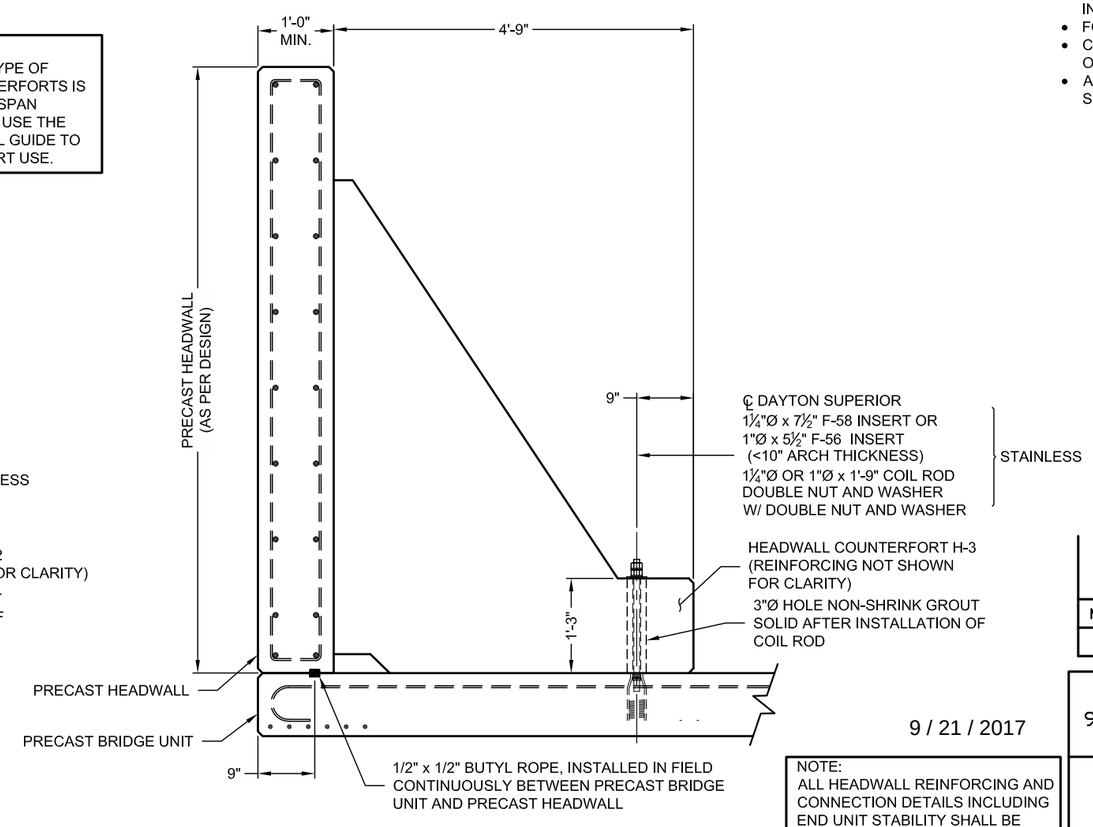

DETACHED HEADWALL DETAIL

H-3 COUNTERFORT OPTION WITHOUT GUIDERAIL
NOT TO SCALE

THIS DRAWING IS THE PROPERTY OF CONTECH ENGINEERED SOLUTIONS, LLC, IT IS MADE FOR THE EXCLUSIVE USE OF CONTECH ENGINEERED SOLUTIONS, LLC. NEITHER THE DRAWING OR REPRODUCTION OF IT NOR INFORMATION DERIVED FROM IT IS TO BE GIVEN TO OTHERS WITH THE EXPRESSED CONSENT OF CONTECH ENGINEERED SOLUTIONS, LLC. NO USE IS TO BE MADE OF IT WHICH IS OR MAY BE IN ANY WAY INJURIOUS TO AND/OR CONTRARY TO THE INTERESTS OF CONTECH ENGINEERED SOLUTIONS, LLC. CONTECH ENGINEERED SOLUTIONS, LLC MAKES NO REPRESENTATION OR WARRANTIES AS TO ANY USE OF THIS DRAWING OTHER THAT WHICH CONTECH ENGINEERED SOLUTIONS, LLC ORIGINALLY INTENDED.

NOTE:
DETAILS ON THIS SHEET ARE COVERED UNDER U.S. PATENT NUMBER US 7,556,451.

Mark	Description	By	Chk'd.	Recm'd.	Date
REVISIONS					

9 / 21 / 2017

NOTE:
ALL HEADWALL REINFORCING AND CONNECTION DETAILS INCLUDING END UNIT STABILITY SHALL BE DETERMINED BY PROJECT-SPECIFIC DESIGN.

NOTE:
HEADWALL REINFORCING SHALL BE EPOXY COATED OR GALVANIZED

CONTECH ENGINEERED SOLUTIONS LLC
9025 CENTRE POINTE DR. WESTCHESTER, OHIO 45069
(513) 645-7000

CON/SPAN PRECAST STRUCTURE
STANDARD DETAIL DRAWING

PADOT DWG. # 86-353 PE (Change #2)

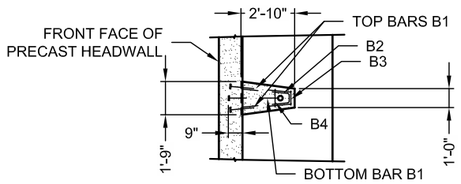

PLAN - TYPE H-1

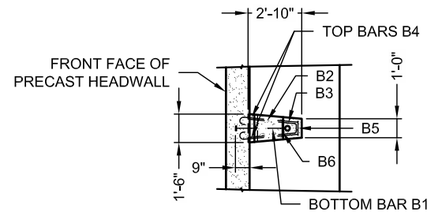

PLAN - TYPE H-2

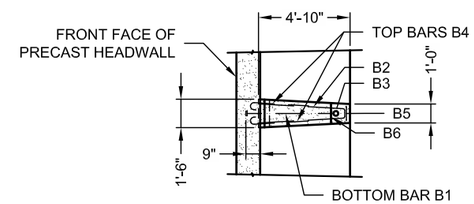

PLAN - TYPE H-3

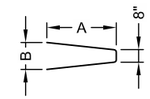

TYPE 1

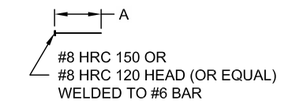

TYPE 3

*NOTE: HRC HEADS PROVIDED BY HEADED REINFORCEMENT CORP.

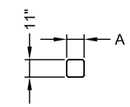

TYPE 2

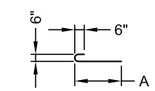

TYPE 4

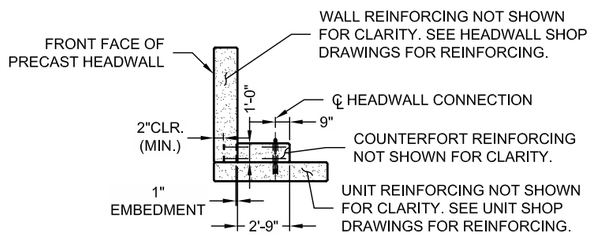

SECTION - TYPE H-1

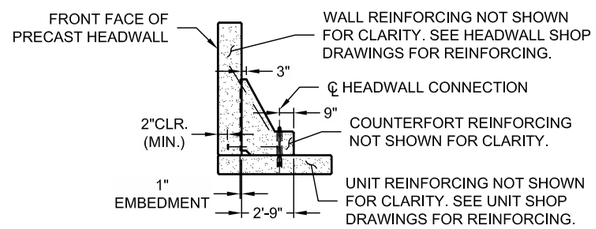

SECTION - TYPE H-2

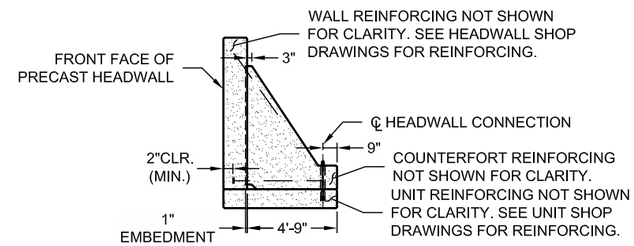

SECTION - TYPE H-3

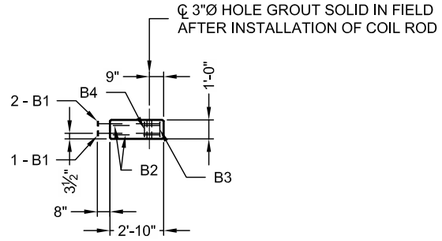

PRECAST COUNTERFORT TYPE H-1

TOTAL WEIGHT = .284 TONS

BAR LIST - TYPE H-1						
MARK	QTY.	SIZE	A	B	TYPE	LENGTH
B1	3	#6	3'-0"	-	3	3'-0"
B2	2	#5	2'-6"	1'-5"	1	5'-8"
B3	1	#3	8"	-	2	2'-8"
B4	1	#3	11"	-	2	3'-2"

STANDARD CLEARANCE = 2"

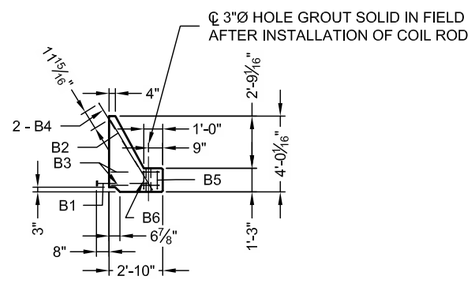

PRECAST COUNTERFORT TYPE H-2

TOTAL WEIGHT = .597 TONS

BAR LIST - TYPE H-2						
MARK	QTY.	SIZE	A	B	TYPE	LENGTH
B1	1	#6	3'-0"	-	3	3'-0"
B2	1	#5	4'-3"	1'-2"	1	9'-6"
B3	2	#3	2'-6"	1'-2"	1	5'-8"
B4	2	#6	3'-11"	-	4	4'-7"
B5	1	#3	8"	-	2	3'-2"
B6	1	#3	10"	-	2	3'-6"

STANDARD CLEARANCE = 2"

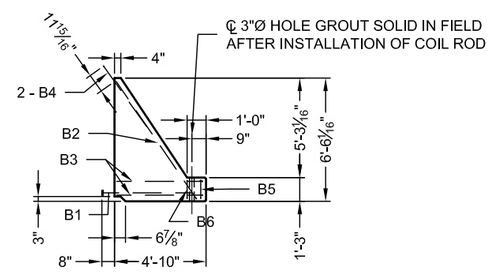

PRECAST COUNTERFORT TYPE H-3

TOTAL WEIGHT = 1.619 TONS

BAR LIST - TYPE H-3						
MARK	QTY.	SIZE	A	B	TYPE	LENGTH
B1	1	#6	3'-0"	-	3	3'-0"
B2	1	#5	7'-5"	1'-2"	1	15'-6"
B3	2	#3	4'-6"	1'-2"	1	9'-8"
B4	2	#6	3'-11"	-	4	4'-7"
B5	1	#3	8"	-	2	3'-2"
B6	1	#3	10"	-	2	3'-6"

STANDARD CLEARANCE = 2"

THIS DRAWING IS THE PROPERTY OF CONTECH ENGINEERED SOLUTIONS, LLC, IT IS MADE FOR THE EXCLUSIVE USE OF CONTECH ENGINEERED SOLUTIONS, LLC. NEITHER THE DRAWING OR REPRODUCTION OF IT NOR INFORMATION DERIVED FROM IT IS TO BE GIVEN TO OTHERS WITH THE EXPRESSED CONSENT OF CONTECH ENGINEERED SOLUTIONS, LLC. NO USE IS TO BE MADE OF IT WHICH IS OR MAY BE IN ANY WAY INJURIOUS TO AND/OR CONTRARY TO THE INTERESTS OF CONTECH ENGINEERED SOLUTIONS, LLC. CONTECH ENGINEERED SOLUTIONS, LLC MAKES NO REPRESENTATION OR WARRANTIES AS TO ANY USE OF THIS DRAWING OTHER THAT WHICH CONTECH ENGINEERED SOLUTIONS, LLC ORIGINALLY INTENDED.

NOTE:
DETAILS ON THIS SHEET ARE COVERED UNDER U.S. PATENT NUMBER US 7,556,451.

NOTE:
ALL HEADWALL REINFORCING AND CONNECTION DETAILS INCLUDING END UNIT STABILITY SHALL BE DETERMINED BY PROJECT-SPECIFIC DESIGN.

NOTE:
HEADWALL REINFORCING SHALL BE EPOXY COATED OR GALVANIZED.

Mark	Description	By	Chk'd.	Recm'd.	Date
REVISIONS					

CONTECH ENGINEERED SOLUTIONS LLC
9025 CENTRE POINTE DR. WESTCHESTER, OHIO 45069
(513) 645-7000

CON/SPAN PRECAST STRUCTURE
STANDARD DETAIL DRAWING

9 / 21 / 2017

PADOT DWG. # 86-353 PE (Change #2)

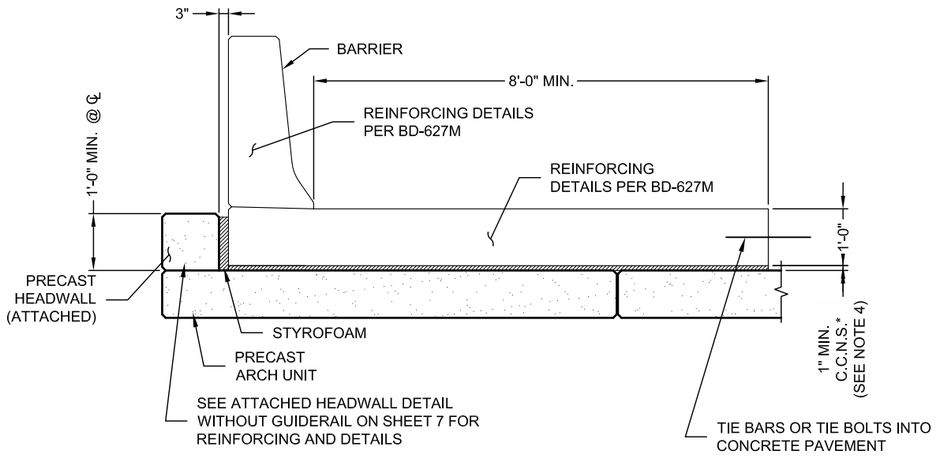

TYPICAL BARRIER DETAIL-TYPE B1 CONCRETE PAVEMENT

NOT TO SCALE

FOR PRECAST ARCH STRUCTURE (SPAN <32'-0" OR RISE ≤12'-0") WITH FILL HEIGHT AT CROWN BETWEEN 1'-1" AND 2'-1".

** MAXIMUM ATTACHED HEADWALL HEIGHTS MAY BE LIMITED BY SHIPPING CONSIDERATIONS (OVERALL WEIGHTS AND DIMENSIONS)

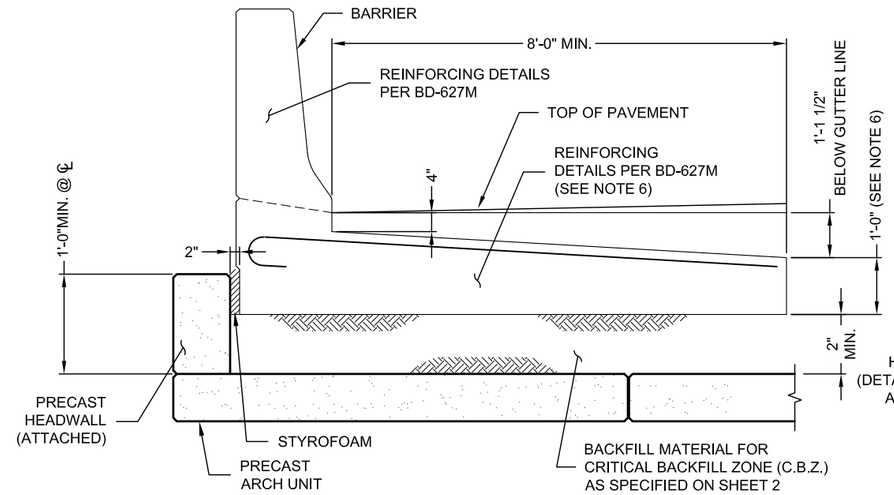

TYPICAL BARRIER DETAIL - TYPE B2 ASPHALT PAVEMENT

NOT TO SCALE

FOR PRECAST ARCH STRUCTURE (SPAN <32'-0" AND RISE ≤12'-0" WITH FILL HEIGHT AT CROWN BETWEEN 2'-3 1/2" AND 3'-0")

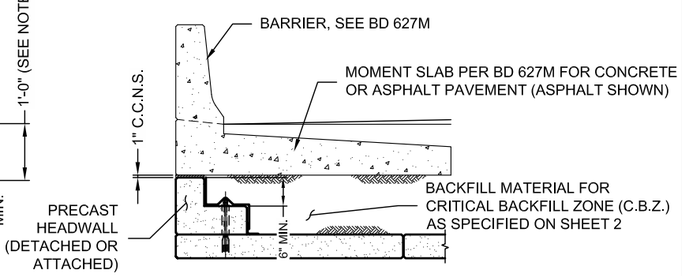

TYPICAL BARRIER DETAIL - TYPE B5 ASPHALT/CONCRETE PAVEMENT

NOT TO SCALE

FOR PRECAST ARCH STRUCTURE WITH FILL HEIGHT AT CROWN GREATER THAN 2'-3" (CONCRETE PAVEMENT) AND 3'-3" (ASPHALT PAVEMENT)

NOTE:
1. DETAILS ON THIS SHEET APPLY WHEN ATTACHED HEADWALL WITH PARAPET OR ATTACHED HEADWALL WITH GUIDERAIL DETAILS ON SHEET 7 CANNOT BE DESIGNED FOR SPECIFIED IMPACT LOAD.
2. WHERE STYROFOAM IS INDICATED, USE STYROFOAM ASTM C 578, TYPE 1, EXCEPT LIMIT THE WATER ABSORPTION TO 2% BY VOLUME.
3. C.C.N.S. = CLOSED CELL NEOPRENE SPONGE
4. WHERE COVER BETWEEN BOTTOM OF MOMENT SLAB TO TOP OF ARCH IS GREATER THAN 1", C.C.N.S. IS NOT NEEDED. USE BACKFILL MATERIAL FOR CBZ AS SPECIFIED ON SHEET 2.
5. THE SPAN, RISE, AND COVER LIMITS IN THESE DETAILS ARE APPROXIMATE. ALL CONFIGURATIONS MUST BE REVIEWED AND APPROVED BY CONTECH PRIOR TO FINAL DESIGN.
6. MOMENT SLAB THICKNESS MAY BE REDUCED 3" (MAXIMUM) WHEN COVER AT CROWN IS BETWEEN 2'- 0½" AND 2'-3". TOP BARS SHOWN SHALL BE #6 @ 6" IF STANDARD THICKNESS IS REDUCED. USED FOR TL-3 ONLY
7. PA TYPE 10 M RAILING MAY BE USED WITH MOMENT SLABS SHOW, SEE BC-709M

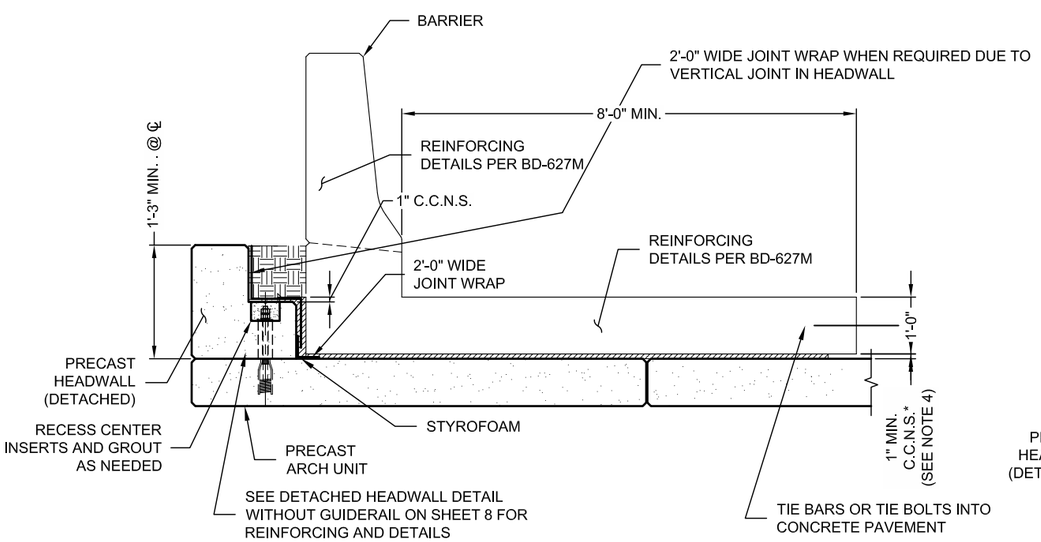

TYPICAL BARRIER DETAIL - TYPE B3 CONCRETE PAVEMENT

NOT TO SCALE

FOR PRECAST ARCH STRUCTURE (SPAN ≥32'-0" OR RISE >12'-0") WITH FILL HEIGHT AT CROWN BETWEEN 1'-1" AND 2'-3".

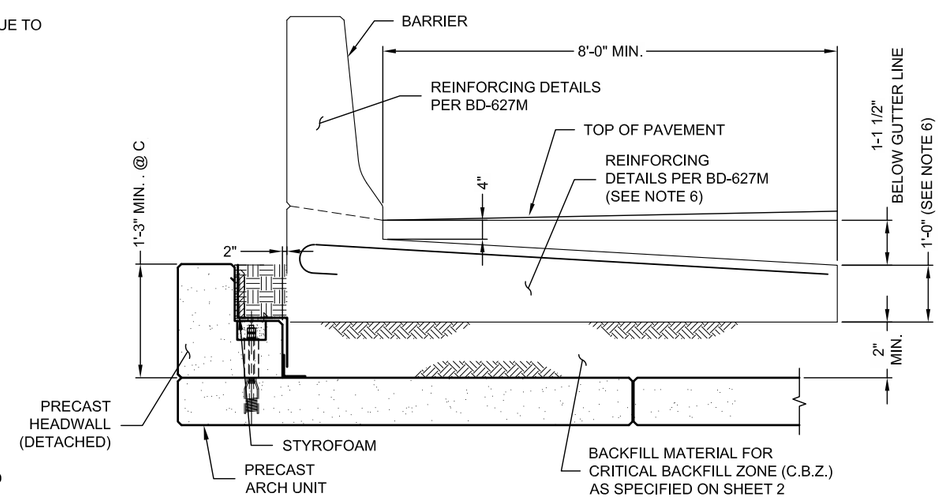

TYPICAL BARRIER DETAIL - TYPE B4 ASPHALT PAVEMENT

NOT TO SCALE

FOR PRECAST ARCH STRUCTURE (SPAN ≥32'-0" OR RISE >12'-0" WITH FILL HEIGHT AT CROWN BETWEEN 2'-3 1/2" AND 3'-3").

9 / 21 / 2017

Mark	Description	By	Chk'd.	Recm'd.	Date
REVISIONS					

CONTECH ENGINEERED SOLUTIONS LLC
9025 CENTRE POINTE DR. WESTCHESTER, OHIO 45069
(513) 645-7000

CON/SPAN PRECAST STRUCTURE
STANDARD DETAIL DRAWING

PADOT DWG. # 86-353 PE (Change #2)

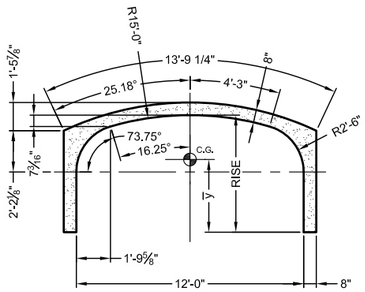

12'-0" SPAN

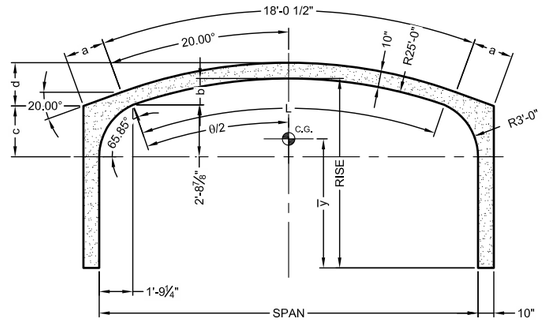

16'-0" TO 24'-0" SPANS

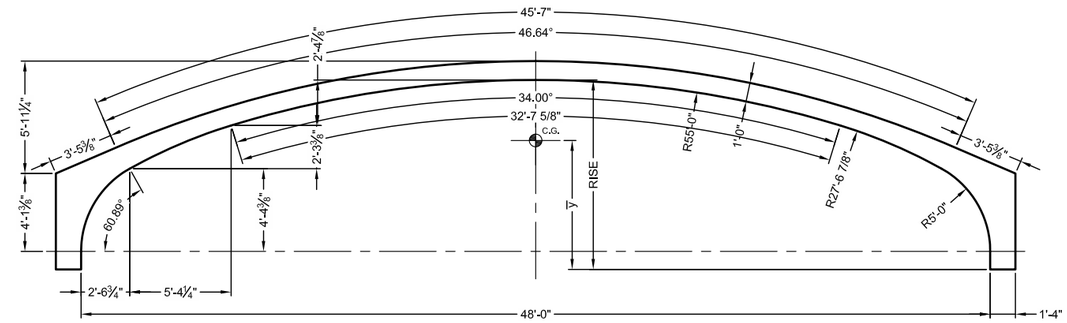

48'-0" SPAN

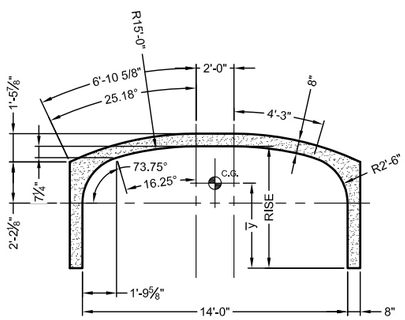

14'-0" SPAN

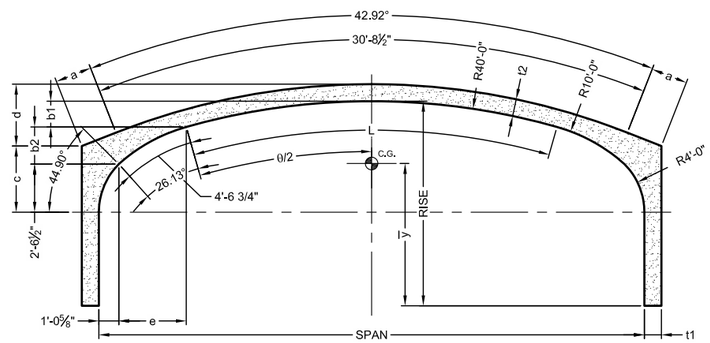

28'-0" TO 42'-0" SPANS

NOTE:
OTHER SPAN/RISE COMBINATIONS ARE AVAILABLE ON A CASE BY CASE BASIS. CONTACT CONTECH ENGINERED SOLUTIONS.

THIS DRAWING IS THE PROPERTY OF CONTECH ENGINEERED SOLUTIONS, LLC, IT IS MADE FOR THE EXCLUSIVE USE OF CONTECH ENGINEERED SOLUTIONS, LLC. NEITHER THE DRAWING OR REPRODUCTION OF IT NOR INFORMATION DERIVED FROM IT IS TO BE GIVEN TO OTHERS WITH THE EXPRESSED CONSENT OF CONTECH ENGINEERED SOLUTIONS, LLC. NO USE IS TO BE MADE OF IT WHICH IS OR MAY BE IN ANY WAY INJURIOUS TO AND/OR CONTRARY TO THE INTERESTS OF CONTECH ENGINEERED SOLUTIONS, LLC. CONTECH ENGINEERED SOLUTIONS, LLC MAKES NO REPRESENTATION OR WARRANTIES AS TO ANY USE OF THIS DRAWING OTHER THAT WHICH CONTECH ENGINEERED SOLUTIONS, LLC ORIGINALLY INTENDED.

CENTER OF GRAVITY Y - ft

RISE ft	SPAN - ft											
	12	14	16	20	24	28	32	36	42	48	54	60
4	3.1	3.2										
5	3.8	3.9	3.8	3.8								
6	4.4	4.6	4.6	4.6	4.6							
7	5.1	5.2	5.3	5.3	5.3	5.3	5.3					
8	5.7	5.8	6.0	6.0	6.0	6.0	6.0	5.8				
9	6.3	6.5	6.6	6.6	6.6	6.7	6.8	6.5				
10	6.9	7.1	7.3	7.3	7.3	7.4	7.5	7.2	6.9	7.1		
11						8.0	8.2	7.9	7.7	7.8	8.1	
12							8.9	8.6	8.4	8.5	8.9	8.4
13								9.3	9.1	9.2	9.6	9.2
14											10.3	9.9

AREA OF CONCRETE SECTION - sq ft

RISE ft	SPAN - ft											
	12	14	16	20	24	28	32	36	42	48	54	60
4	13.8	15.2										
5	15.2	16.5	22.8	24.8								
6	16.5	17.8	24.4	26.5	29.1							
7	17.8	19.2	26.1	28.2	30.8	39.9	47.5					
8	19.2	20.5	27.8	29.9	32.5	41.9	49.5	54.1				
9	20.5	21.8	29.5	31.5	34.2	43.9	51.5	56.4				
10	21.8	23.0	31.2	33.2	35.8	45.9	53.5	58.7	64.7	70.4		
11						47.9	55.5	61.1	67.0	73.0	89.5	
12							57.5	63.4	69.4	75.7	92.2	103.4
13								65.7	71.7	78.4	94.9	106.4
14											97.5	109.4

GEOMETRIC PROPERTIES (NOT SHOWN ON DRAWING)

	SPAN - ft						
	16	20	24	28	32	36	42
θ	28.85°	38.43°	48.29°	25.30°	31.54°	37.93°	47.86°
L	12.59	16.77	21.07	17.66	22.02	26.48	33.41
a	0.00	2.13	4.25	0.00	2.15	4.48	4.48
b	0.79	1.39	2.19				
b1				0.97	1.51	2.17	3.50
b2				1.96	2.18	2.40	2.75
c	2.80	2.68	2.75	3.76	3.88	3.91	4.31
d	1.56	2.29	3.01	2.84	3.63	4.48	5.66
e				4.07	3.96	3.83	3.63
t1				1.00	1.00	1.17	1.17
t2				0.83	1.00	1.00	1.00

9 / 21 / 2017

Mark	Description	By	Chk'd.	Recm'd.	Date

REVISIONS

CONTECH ENGINEERED SOLUTIONS LLC
9025 CENTRE POINTE DR. WESTCHESTER, OHIO 45069
(513) 645-7000

CON/SPAN PRECAST STRUCTURE
STANDARD DETAIL DRAWING

PADOT DWG. # 86-353 PE (Change #2)

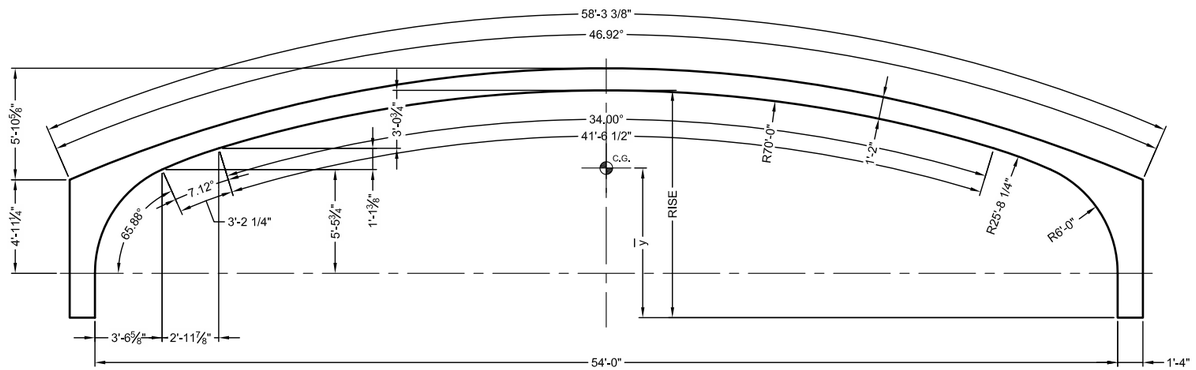

54'-0" SPAN

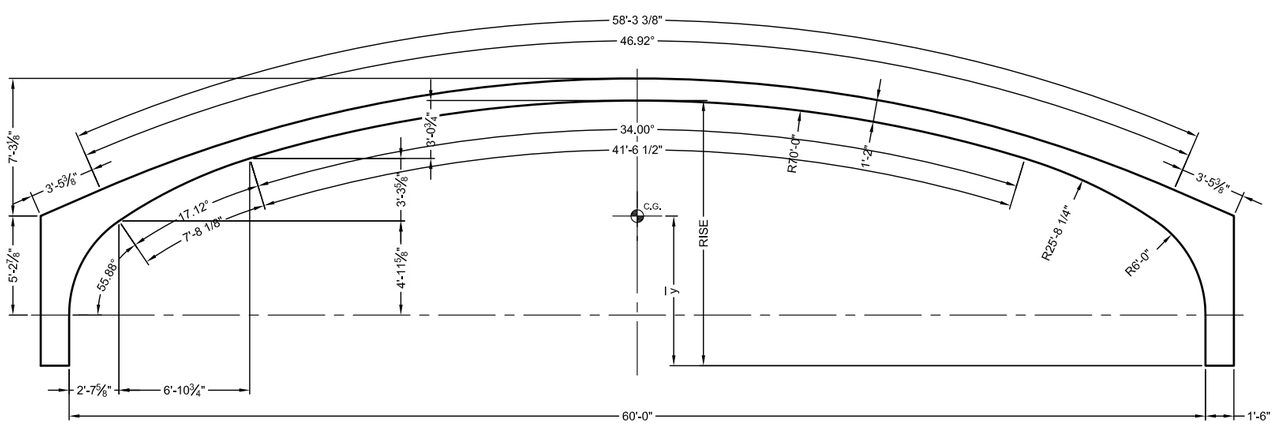

60'-0" SPAN

THIS DRAWING IS THE PROPERTY OF CONTECH ENGINEERED SOLUTIONS, LLC, IT IS MADE FOR THE EXCLUSIVE USE OF CONTECH ENGINEERED SOLUTIONS, LLC. NEITHER THE DRAWING OR REPRODUCTION OF IT NOR INFORMATION DERIVED FROM IT IS TO BE GIVEN TO OTHERS WITH THE EXPRESSED CONSENT OF CONTECH ENGINEERED SOLUTIONS, LLC. NO USE IS TO BE MADE OF IT WHICH IS OR MAY BE IN ANY WAY INJURIOUS TO AND/OR CONTRARY TO THE INTERESTS OF CONTECH ENGINEERED SOLUTIONS, LLC. CONTECH ENGINEERED SOLUTIONS, LLC MAKES NO REPRESENTATION OR WARRANTIES AS TO ANY USE OF THIS DRAWING OTHER THAT WHICH CONTECH ENGINEERED SOLUTIONS, LLC ORIGINALLY INTENDED.

Mark	Description	By	Chk'd.	Recm'd.	Date
REVISIONS					

CONTECH ENGINEERED SOLUTIONS LLC
9025 CENTRE POINTE DR. WESTCHESTER, OHIO 45069
(513) 645-7000

CON/SPAN PRECAST STRUCTURE
STANDARD DETAIL DRAWING

9 / 21 / 2017

PADOT DWG. # 86-353 PE (Change #2)

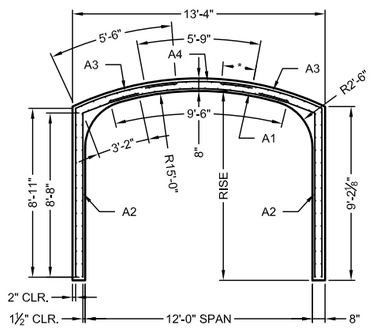

12'-0" SPAN

RISE = 10'-0" **SEE NOTE

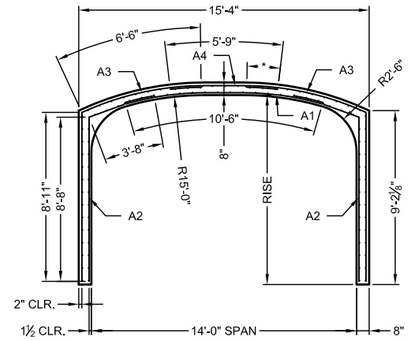

14'-0" SPAN

RISE = 10'-0" **SEE NOTE

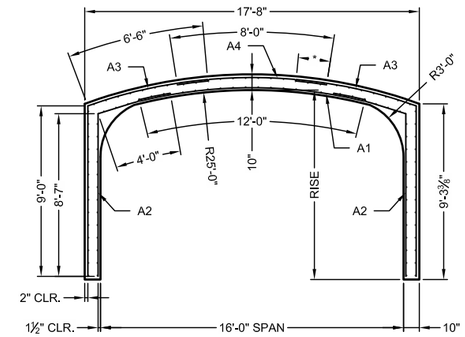

16'-0" SPAN

RISE = 10'-0" **SEE NOTE

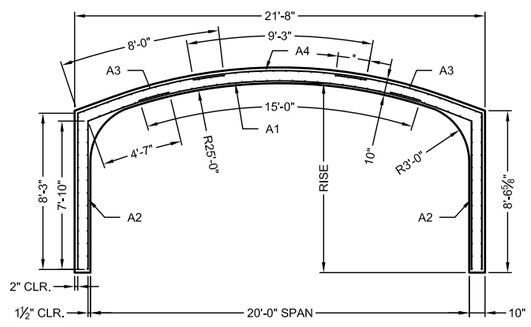

20'-0" SPAN

RISE = 10'-0" **SEE NOTE

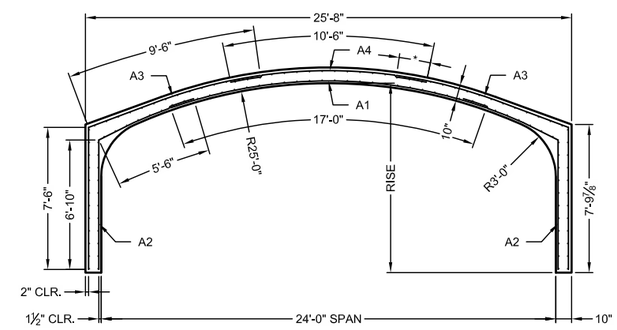

24'-0" SPAN

RISE = 10'-0" **SEE NOTE

THIS DRAWING IS THE PROPERTY OF CONTECH ENGINEERED SOLUTIONS, LLC, IT IS MADE FOR THE EXCLUSIVE USE OF CONTECH ENGINEERED SOLUTIONS, LLC. NEITHER THE DRAWING OR REPRODUCTION OF IT NOR INFORMATION DERIVED FROM IT IS TO BE GIVEN TO OTHERS WITH THE EXPRESSED CONSENT OF CONTECH ENGINEERED SOLUTIONS, LLC. NO USE IS TO BE MADE OF IT WHICH IS OR MAY BE IN ANY WAY INJURIOUS TO AND/OR CONTRARY TO THE INTERESTS OF CONTECH ENGINEERED SOLUTIONS, LLC. CONTECH ENGINEERED SOLUTIONS, LLC MAKES NO REPRESENTATION OR WARRANTIES AS TO ANY USE OF THIS DRAWING OTHER THAT WHICH CONTECH ENGINEERED SOLUTIONS, LLC ORIGINALLY INTENDED.

SHEET NO.	12'-0" SPAN			14'-0" SPAN			16'-0" SPAN			20'-0" SPAN			24'-0" SPAN		
	CIRCUMFERENTIAL AREA REQ'D in²/ft	LONGITUDINAL AREA REQ'D in²/ft	LENGTH ft	CIRCUMFERENTIAL AREA REQ'D in²/ft	LONGITUDINAL AREA REQ'D in²/ft	LENGTH ft	CIRCUMFERENTIAL AREA REQ'D in²/ft	LONGITUDINAL AREA REQ'D in²/ft	LENGTH ft	CIRCUMFERENTIAL AREA REQ'D in²/ft	LONGITUDINAL AREA REQ'D in²/ft	LENGTH ft	CIRCUMFERENTIAL AREA REQ'D in²/ft	LONGITUDINAL AREA REQ'D in²/ft	LENGTH ft
1	A1 = * *	0.13	9'-6"	A1 = * *	0.13	10'-6"	A1 = * *	0.13	12'-0"	A1 = * *	0.13	15'-0"	A1 = * *	0.13	17'-0"
2	A2 = 0.24	0.13	11'-9"	A2 = 0.24	0.13	12'-3"	A2 = 0.24	0.13	12'-7"	A2 = 0.24	0.13	12'-5"	A2 = 0.24	0.13	12'-4"
3	A3 = * *	0.13	14'-4"	A3 = * *	0.13	15'-4"	A3 = * *	0.13	15'-6"	A3 = * *	0.13	16'-3"	A3 = * *	0.13	17'-0"
4	A4 = 0.24	0.13	5'-9"	A4 = 0.24	0.13	5'-9"	A4 = 0.24	0.13	8'-0"	A4 = 0.24	0.13	9'-3"	A4 = 0.24	0.13	10'-6"

NOTES:
* SEE GENERAL NOTES ON SHEET 3 FOR MINIMUM OVERLAP LENGTHS.

** SEE SHEET 16 OF 20 FOR A1 AND A3 STEEL AREAS.

1. ALL REINFORCING DIMENSIONS SHOWN ARE FOR 10'-0" RISE. A2 AND A3 STEEL LENGTHS SHALL BE REVISED ACCORDINGLY FOR RISES OTHER THAN 10'-0".

9 / 21 / 2017

Mark	Description	By	Chk'd.	Recm'd.	Date
REVISIONS					

CONTECH ENGINEERED SOLUTIONS LLC
9025 CENTRE POINTE DR. WESTCHESTER, OHIO 45069
(513) 645-7000

CON/SPAN PRECAST STRUCTURE
STANDARD DETAIL DRAWING

PADOT DWG. # 86-353 PE (Change #2)

THIS DRAWING IS THE PROPERTY OF CONTECH ENGINEERED SOLUTIONS, LLC, IT IS MADE FOR THE EXCLUSIVE USE OF CONTECH ENGINEERED SOLUTIONS, LLC. NEITHER THE DRAWING OR REPRODUCTION OF IT NOR INFORMATION DERIVED FROM IT IS TO BE GIVEN TO OTHERS WITH THE EXPRESSED CONSENT OF CONTECH ENGINEERED SOLUTIONS, LLC. NO USE IS TO BE MADE OF IT WHICH IS OR MAY BE IN ANY WAY INJURIOUS TO AND/OR CONTRARY TO THE INTERESTS OF CONTECH ENGINEERED SOLUTIONS, LLC. CONTECH ENGINEERED SOLUTIONS, LLC MAKES NO REPRESENTATION OR WARRANTIES AS TO ANY USE OF THIS DRAWING OTHER THAT WHICH CONTECH ENGINEERED SOLUTIONS, LLC ORIGINALLY INTENDED.

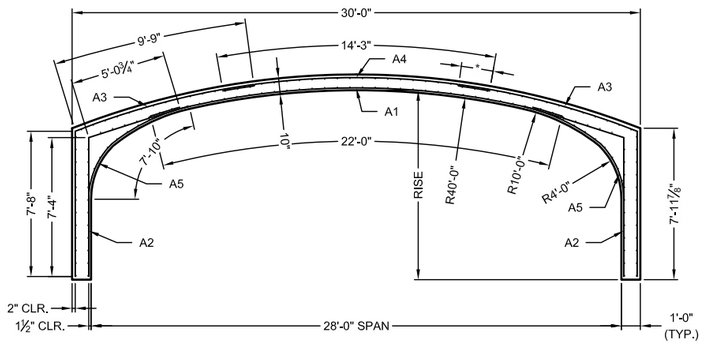

28'-0" SPAN

RISE = 10'-0"

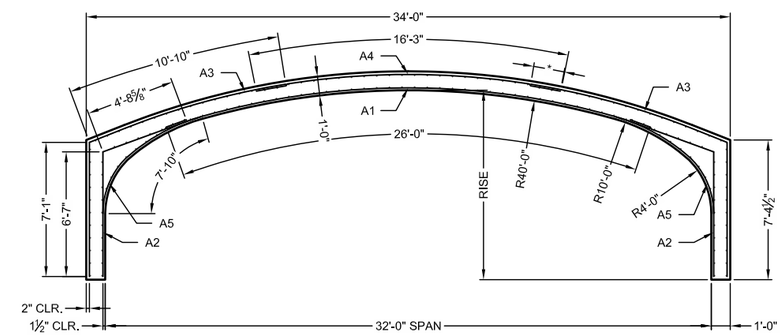

32'-0" SPAN

RISE = 10'-0"

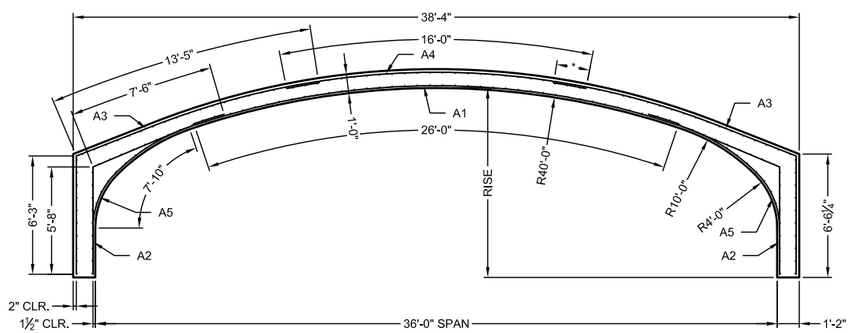

36'-0" SPAN

RISE = 10'-0"

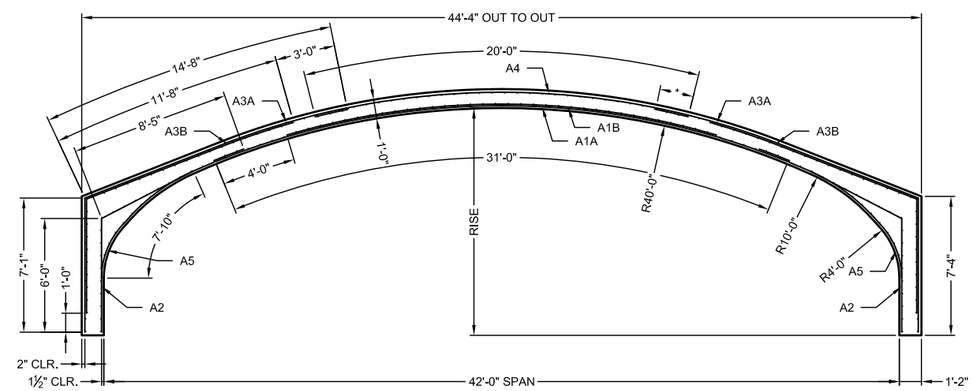

42'-0" SPAN

RISE = 12'-0"

SHEET NO.	28'-0" SPAN			32'-0" SPAN			36'-0" SPAN			42'-0" SPAN		
	CIRCUMFERENTIAL AREA REQ'D in²/ft	LONGITUDINAL AREA REQ'D in²/ft	LENGTH ft	CIRCUMFERENTIAL AREA REQ'D in²/ft	LONGITUDINAL AREA REQ'D in²/ft	LENGTH ft	CIRCUMFERENTIAL AREA REQ'D in²/ft	LONGITUDINAL AREA REQ'D in²/ft	LENGTH ft	CIRCUMFERENTIAL AREA REQ'D in²/ft	LONGITUDINAL AREA REQ'D in²/ft	LENGTH ft
1	A1A = * *	0.13	22'-0"	A1A = * *	0.13	26'-0"	A1A = * *	0.13	26'-0"	A1A = * *	0.13	31'-0"
2	A1B = * *	NOT REQ'D	16'-0"	A1B = * *	NOT REQ'D	20'-0"	A1B = * *	NOT REQ'D	18'-0"	A1B = * *	NOT REQ'D	23'-0"
3	A2 = 0.36	0.13	12'-6"	A2 = 0.36	0.13	11'-4"	A2 = 0.36	0.13	13'-2"	A2 = 0.48	0.13	14'-4"
4	A3A = * *	0.13	17'-6"	A3A = * *	0.13	17'-11"	A3A = * *	0.13	19'-8"	A3A = * *	0.13	21'-9"
5	A3B = * *	NOT REQ'D	13'-6"	A3B = * *	NOT REQ'D	14'-11"	A3B = * *	NOT REQ'D	15'-8"	A3B = * *	NOT REQ'D	17'-9"
6	A4 = 0.36	0.13	14'-3"	A4 = 0.36	0.13	16'-3"	A4 = 0.36	0.13	16'-0"	A4 = 0.48	0.13	20'-0"
7	A5 = 0.24	0.13	7'-10"	A5 = 0.24	0.13	7'-10"	A5 = 0.24	0.13	7'-10"	A5 = 0.24	0.13	7'-10"

NOTES:

* SEE GENERAL NOTES ON SHEET 3 FOR MINIMUM OVERLAP LENGTHS.

** SEE SHEET 16 OF 20 FOR A1 AND A3 STEEL AREAS.

1. REINFORCING DIMENSIONS SHOWN FOR THE 28'-0" TO 36'-0" SPANS ARE FOR A 10'-0" RISE. DIMENSIONS SHOWN FOR THE 42'-0" SPAN ARE FOR A 12'-0" RISE. A2 AND A3 STEEL LENGTHS SHALL BE REVISED ACCORDINGLY FOR RISES OTHER THAN THOSE INDICATED.

9 / 21 / 2017

Mark	Description	By	Chk'd.	Recm'd.	Date

REVISIONS

CONTECH ENGINEERED SOLUTIONS LLC
9025 CENTRE POINTE DR. WESTCHESTER, OHIO 45069
(513) 645-7000

CON/SPAN PRECAST STRUCTURE
STANDARD DETAIL DRAWING

PADOT DWG. # 86-353 PE (Change #2)

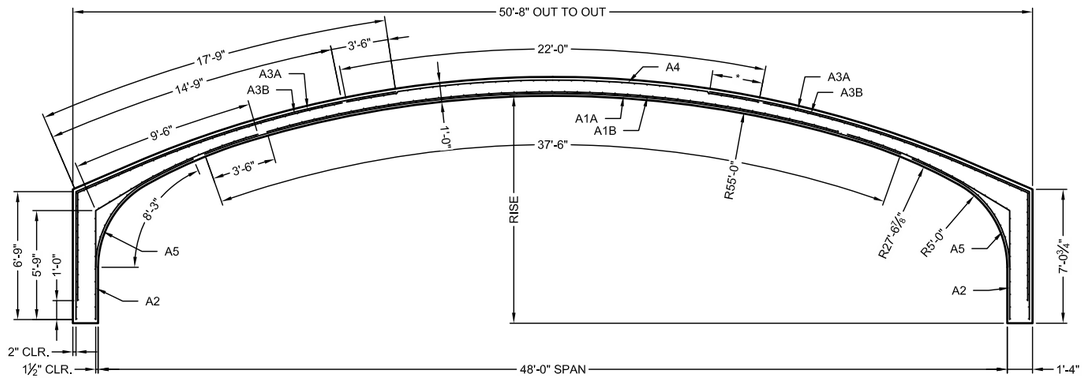

48'-0" SPAN

RISE = 12'-0"

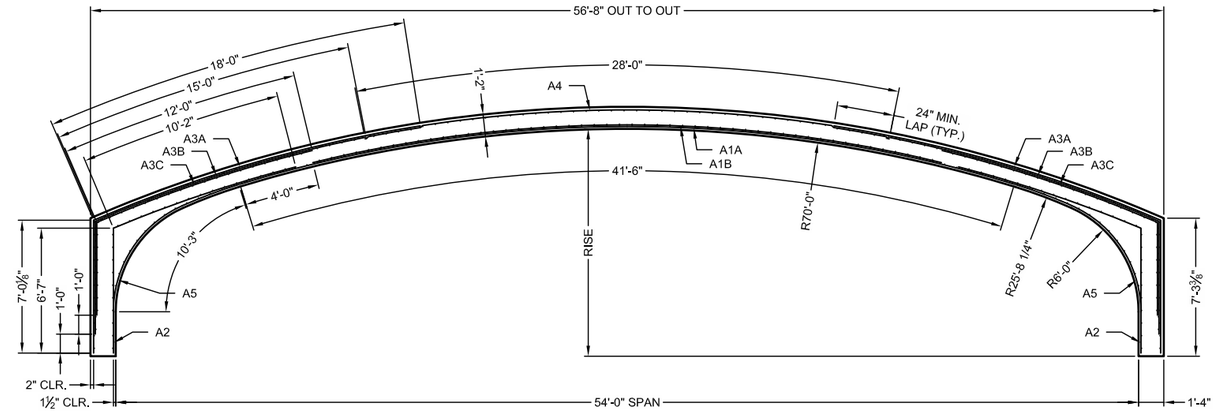

54'-0" SPAN

RISE = 12'-0"

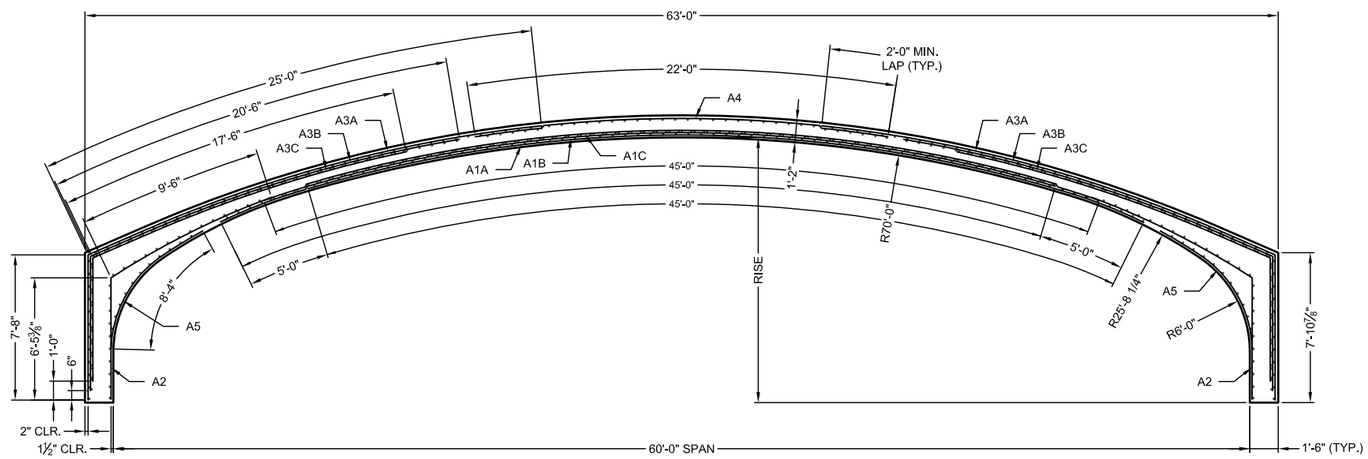

60'-0" SPAN

RISE = 14'-0"

THIS DRAWING IS THE PROPERTY OF CONTECH ENGINEERED SOLUTIONS, LLC, IT IS MADE FOR THE EXCLUSIVE USE OF CONTECH ENGINEERED SOLUTIONS, LLC. NEITHER THE DRAWING OR REPRODUCTION OF IT NOR INFORMATION DERIVED FROM IT IS TO BE GIVEN TO OTHERS WITH THE EXPRESSED CONSENT OF CONTECH ENGINEERED SOLUTIONS, LLC. NO USE IS TO BE MADE OF IT WHICH IS OR MAY BE IN ANY WAY INJURIOUS TO AND/OR CONTRARY TO THE INTERESTS OF CONTECH ENGINEERED SOLUTIONS, LLC. CONTECH ENGINEERED SOLUTIONS, LLC MAKES NO REPRESENTATION OR WARRANTIES AS TO ANY USE OF THIS DRAWING OTHER THAT WHICH CONTECH ENGINEERED SOLUTIONS, LLC ORIGINALLY INTENDED.

SHEET NO.	48'-0" SPAN			54'-0" SPAN			60'-0" SPAN		
	CIRCUMFERENTIAL AREA REQ'D in²/ft	LONGITUDINAL AREA REQ'D in²/ft	LENGTH ft	CIRCUMFERENTIAL AREA REQ'D in²/ft	LONGITUDINAL AREA REQ'D in²/ft	LENGTH ft	CIRCUMFERENTIAL AREA REQ'D in²/ft	LONGITUDINAL AREA REQ'D in²/ft	LENGTH ft
1	A1A = * *	0.13	37'-6"	A1A = * *	0.13	41'-6"	A1A = * *	0.13	45'-0"
2	A1B = * *	NOT REQ'D	30'-6"	A1B = * *	0.13	33'-6"	A1B = * *	0.13	45'-0"
3	A2 = 0.48	0.13	15'-1"	A2 = 0.48	0.13	16'-9"	A1C = * *	0.13	45'-0"
4	A3A = * *	0.13	24'-6"	A3A = * *	0.13	25'-0"	A2 = 0.48	0.13	15'-11"
5	A3B = * *	NOT REQ'D	20'-6"	A3B = * *	0.13	21'-0"	A3A = * *	0.13	32'-8"
6	A4 = 0.48	0.13	22'-0"	A3C = * *	0.13	17'-0"	A3B = * *	0.13	27'-8"
7	A5 = 0.24	0.13	8'-3"	A4 = 0.48	0.13	28'-0"	A3C = * *	0.13	24'-2"
8				A5 = 0.24	0.13	10'-3"	A4 = 0.48	0.13	22'-0"
9							A5 = 0.24	0.13	8'-4"

NOTES:

* SEE GENERAL NOTES ON SHEET 3 FOR MINIMUM OVERLAP LENGTHS.

** SEE SHEET 16 OF 20 FOR A1 AND A3 STEEL AREAS.

1. REINFORCING DIMENSIONS SHOWN FOR THE 48'-0" AND 54'-0" SPANS ARE FOR A 12'-0" RISE. DIMENSIONS SHOWN FOR THE 60'-0" SPAN ARE FOR A 14'-0" RISE. A2 AND A3 STEEL LENGTHS SHALL BE REVISED ACCORDINGLY FOR RISES OTHER THAN THOSE INDICATED.

9 / 21 / 2017

Mark	Description	By	Chk'd.	Recm'd.	Date
	REVISIONS				

CONTECH ENGINEERED SOLUTIONS LLC
9025 CENTRE POINTE DR. WESTCHESTER, OHIO 45069
(513) 645-7000

CON/SPAN PRECAST STRUCTURE
STANDARD DETAIL DRAWING

PADOT DWG. # 86-353 PE (Change #2)

(REFER TO SHEETS 9, 10 AND 11 FOR REINFORCING DETAILS)

ARCH UNIT PRIMARY REINFORCING

COVER ft	12'-0" SPAN 4'-0" TO 10'-0" RISE			14'-0" SPAN 4'-0" TO 10'-0" RISE			16'-0" SPAN 5'-0" TO 10'-0" RISE			20'-0" SPAN 5'-0" TO 10'-0" RISE			24'-0" SPAN 6'-0" TO 10'-0" RISE			28'-0" SPAN 7'-0" TO 11'-0" RISE		
	A1 in²/ft	A3 in²/ft	f'c REQ'D. psi	A1 in²/ft	A3 in²/ft	f'c REQ'D. psi	A1 in²/ft	A3 in²/ft	f'c REQ'D. psi	A1 in²/ft	A3 in²/ft	f'c REQ'D. psi	A1 in²/ft	A3 in²/ft	f'c REQ'D. psi	A1 in²/ft	A3 in²/ft	f'c REQ'D. psi
0.83	0.72	0.51	5000	1.20	0.48	5000	0.84	0.51	5000	0.90	0.78	6000	0.96	0.84	6000 ②	1.20	1.08	6000
3	0.57	0.51	5000	0.66	0.48	5000	0.60	0.60	5000	0.90	0.78	5000	0.72	0.84	5000	0.96	1.08	5000
6	0.57	0.51	5000	0.66	0.48	5000	0.60	0.60	5000	0.72	0.78	5000	0.72	1.08	5000	0.96	1.32	5000
9	0.57	0.51	5000	0.66	0.48	5000	0.66	0.66	5000	0.72	0.90	5000	0.72	1.44	5000	0.96	1.68	5000 ①
12	0.57	0.51	5000	0.66	0.60	5000	0.66	0.72	5000	0.72	1.08	5000	0.72	1.80	6000 ①	0.96	1.80	6000 ①

COVER ft	32'-0" SPAN 7'-0" TO 12'-0" RISE			36'-0" SPAN 8'-0" TO 13'-0" RISE			42'-0" SPAN 10'-0" TO 13'-0" RISE			48'-0" SPAN 10'-0" TO 13'-0" RISE			54'-0" SPAN 11'-0" TO 14'-0" RISE			60'-0" SPAN 12'-0" TO 14'-0" RISE		
	A1 in²/ft	A3 in²/ft	f'c REQ'D. psi	A1 in²/ft	A3 in²/ft	f'c REQ'D. psi	A1 in²/ft	A3 in²/ft	f'c REQ'D. psi	A1 in²/ft	A3 in²/ft	f'c REQ'D. psi	A1 in²/ft	A3 in²/ft	f'c REQ'D. psi	A1 in²/ft	A3 in²/ft	f'c REQ'D. psi
0.83	1.20	1.20	6000 ③	1.50	1.44	6000 ④	2.16	1.92	6000 ⑤⑦	2.76	2.64	6000 ⑤⑦	N/A	N/A	N/A	N/A	N/A	N/A
3	1.20	1.56	6000	1.50	1.68	6000	1.44	1.44	6000	1.92	2.16	6000 ⑤	2.64	2.40	6000	2.36	2.36	6000
6	1.20	1.80	6000	1.50	1.92	6000	1.44	1.44	6000 ⑤	1.68	2.36	6000 ①	2.40	2.88	6000 ①	1.92	2.52	6000 ①
9	1.20	2.28	6000	1.50	2.40	6000	1.44	1.92	6000 ①	1.92	2.64	6000 ①	2.64	3.00	6000 ①	1.92	3.00	6000 ①
12	1.20	2.64	6000 ①	1.50	3.00	6000 ①	1.44	2.16	6000 ①	2.64	2.76	6000 ①						

① SHEAR REINFORCEMENT REQUIRED
② SHEAR REINFORCEMENT REQUIRED FOR 6'-0" & 7'-0" RISE
③ SHEAR REINFORCEMENT REQUIRED FOR 7'-0", 8'-0" & 9'-0" RISE
④ SHEAR REINFORCEMENT REQUIRED FOR 8'-0" & 9'-0" RISE
⑤ SHEAR REINFORCEMENT REQUIRED FOR 10'-0" & 11'-0" RISE
⑥ SHEAR REINFORCEMENT REQUIRED FOR ALL RISES LESS THAN 13'-0"
⑦ MINIMUM PRECAST UNIT WIDTH = 3'-11 3/4"

NOTE:
THESE STEEL AREAS ARE SHOWN FOR COVER OF 12'-0" OR LESS. CON/SPAN BRIDGE SYSTEMS SHALL PERFORM A SPECIAL DESIGN FOR COVER GREATER THAN 12'-0".

THIS DRAWING IS THE PROPERTY OF CONTECH ENGINEERED SOLUTIONS, LLC, IT IS MADE FOR THE EXCLUSIVE USE OF CONTECH ENGINEERED SOLUTIONS, LLC. NEITHER THE DRAWING OR REPRODUCTION OF IT NOR INFORMATION DERIVED FROM IT IS TO BE GIVEN TO OTHERS WITH THE EXPRESSED CONSENT OF CONTECH ENGINEERED SOLUTIONS, LLC. NO USE IS TO BE MADE OF IT WHICH IS OR MAY BE IN ANY WAY INJURIOUS TO AND/OR CONTRARY TO THE INTERESTS OF CONTECH ENGINEERED SOLUTIONS, LLC. CONTECH ENGINEERED SOLUTIONS, LLC MAKES NO REPRESENTATION OR WARRANTIES AS TO ANY USE OF THIS DRAWING OTHER THAT WHICH CONTECH ENGINEERED SOLUTIONS, LLC ORIGINALLY INTENDED.

WINGWALL ANCHOR LAYOUT GUIDELINES

NOTE: THE ACTUAL NUMBER AND SIZE OF PRECAST WINGWALL ANCHORS IS TO BE DETERMINED BY THE CON/SPAN MANUFACTURER. HOWEVER, USE THE FOLLOWING CHARTS AS A GENERAL GUIDELINE TO DETERMINE APPROXIMATELY HOW MANY AND WHAT SIZE ANCHORS ARE REQUIRED FOR THE PRECAST WALL. THE SIZE OF EACH ANCHOR SHOULD BE DETERMINED BY THE WALL'S HEIGHT AT THAT ANCHOR'S LOCATION (SEE PLAN VIEW ON SHEET 3 FOR TYPICAL ANCHOR SPACING).

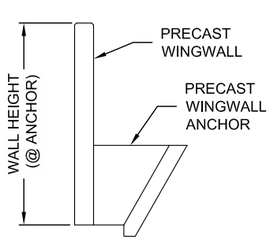

ANCHOR TYPE GUIDELINE

BACKFILL SLOPE (PERPENDICULAR TO WALL)	WALL HEIGHT AT PRECAST ANCHOR LOCATION - ft (SEE DIAGRAM AT LEFT)															
	< 5'	6'	7'	8'	9'	10'	11'	12'	13'	14'	15'	16'	17'	18'	19'	20'
LEVEL BACKFILL WITH 3'-0" LL SURCHARGE	B	B	B	B	D	C	C	D	D	D	F	E	F	-	-	-
LEVEL BACKFILL NO SURCHARGE	B	B	B	B	B	B	B	B	C	C	C	D	D	D	E	F
INFINITE 4:1 NO SURCHARGE	B	B	B	B	B	B	C	C	D	D	E	F	F	-	-	-
INFINITE 3:1 NO SURCHARGE	B	B	B	B	C	C	D	D	D	D	E	F	-	-	-	-
INFINITE 2:1 NO SURCHARGE	B	B	B	C	C	D	E	E	F	-	-	-	-	-	-	-

APPROXIMATE/GUIDELINE NUMBER OF ANCHORS PER WALL

LENGTH OF WALL	NO. ANCHORS
L ≤ 10'-0"	1
10'-0" < L ≤ 15'-0"	2
15'-0" < L ≤ 20'-0"	3
20'-0" < L ≤ 24'-0"	4
24'-0" < L	MULTIPLE-PIECE WINGWALL

NOTE:
ANCHOR TYPE GUIDELINE TABLE BACKFILL SOIL ASSUMPTIONS:
Ø = 30°
UNIT WEIGHT - 90 PCF TO 120 PCF

NOTE:
FOR FINAL DESIGN OF WINGWALLS USED ON PROJECT CONTECH WILL SUBMIT SIGNED AND SEALED DESIGN COMPUTATIONS AND DRAWING DETAILS TO THE DISTRICT BRIDGE ENGINEER FOR REVIEW AND ACCEPTANCE

9 / 21 / 2017

Mark	Description	By	Chk'd.	Recm'd.	Date
REVISIONS					

CONTECH ENGINEERED SOLUTIONS LLC
9025 CENTRE POINTE DR. WESTCHESTER, OHIO 45069
(513) 645-7000

CON/SPAN PRECAST STRUCTURE
STANDARD DETAIL DRAWING

PADOT DWG. # 86-353 PE (Change #2)

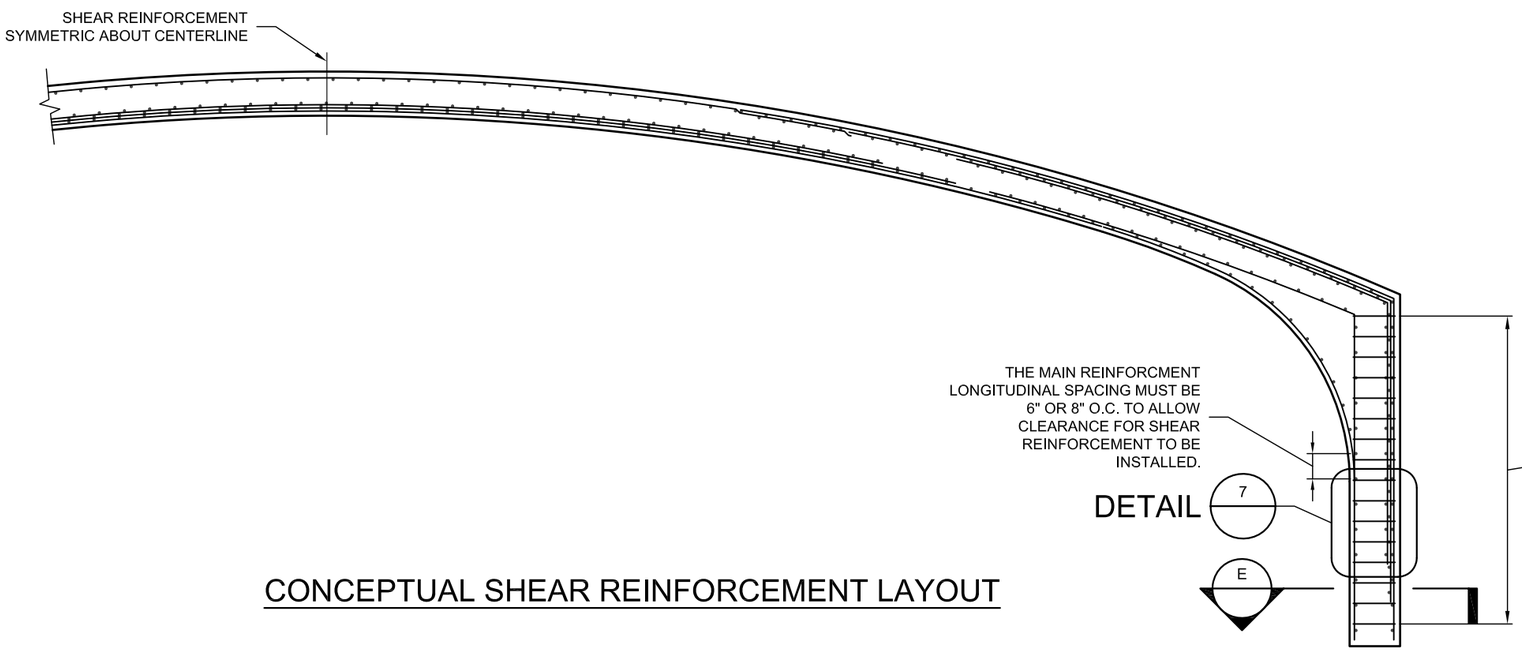

CONCEPTUAL SHEAR REINFORCEMENT LAYOUT

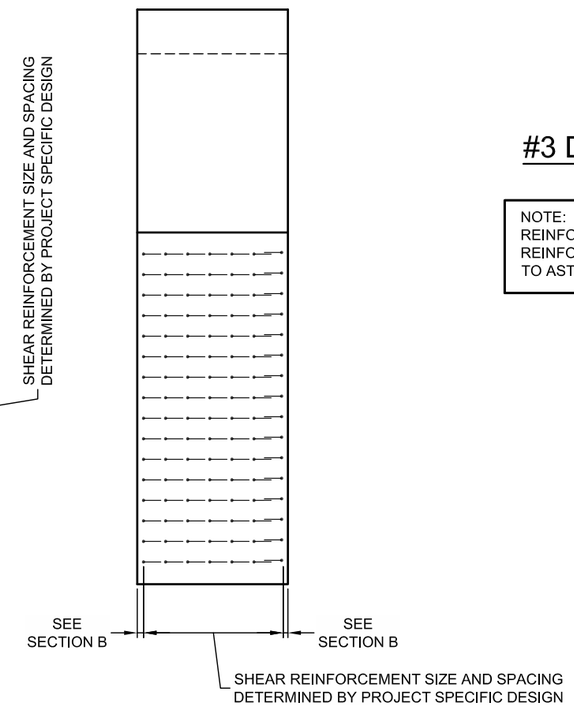

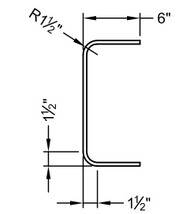

#3 DEFORMED BAR

NOTE:
REINFORCING STEEL FOR SHEAR REINFORCEMENT SHALL CONFORM TO ASTM 615, A616 OR A617-GRADE 60.

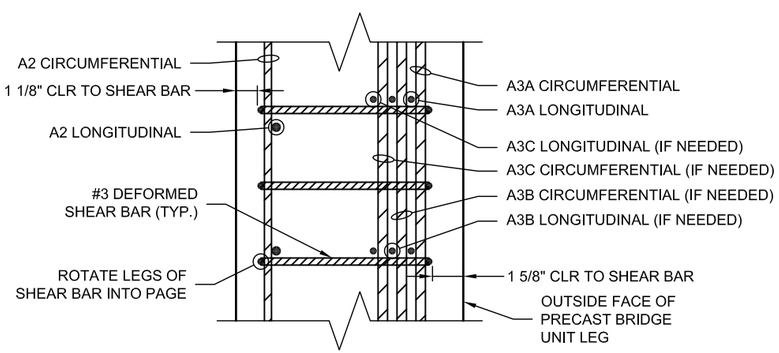

DETAIL 7

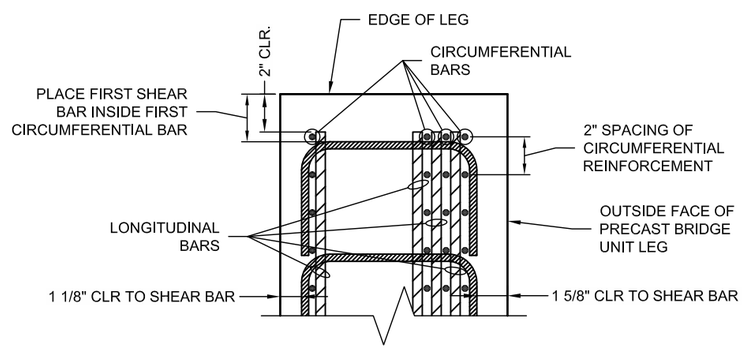

SECTION E

Mark	Description	By	Chk'd.	Recm'd.	Date

REVISIONS

CONTECH ENGINEERED SOLUTIONS LLC
9025 CENTRE POINTE DR. WESTCHESTER, OHIO 45069
(513) 645-7000

CON/SPAN PRECAST STRUCTURE
STANDARD DETAIL DRAWING

9 / 21 / 2017

PADOT DWG. # 86-353 PE (Change #2)

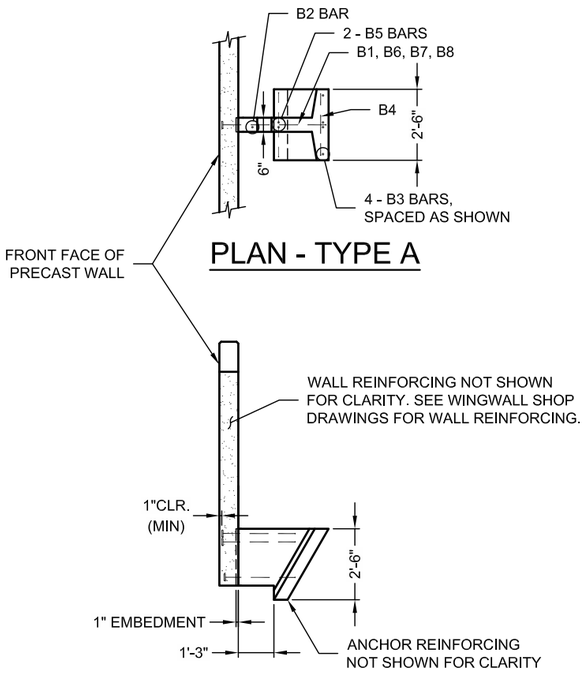

PLAN - TYPE A

SECTION - TYPE A

BAR LIST - TYPE A						
MARK	QTY.	SIZE	A	TYPE	LENGTH	FINISH
B1	3	#6	3'-0"	3	——	EPOXY*
B2	1	#5	——	STR.	1'-8"	BLACK
B3	4	#5	——	STR.	2'-6"	BLACK
B4	6	#5	——	STR.	2'-2"	BLACK
B5	2	#5	2'-2"	2	——	BLACK
B6	1	#5	2'-2"	1	——	BLACK
B7	1	#5	2'-6"	1	——	BLACK
B8	1	#5	2'-9"	1	——	BLACK

NOTE: "STR." DENOTES STRAIGHT BAR. STANDARD CLEARANCE = 2"

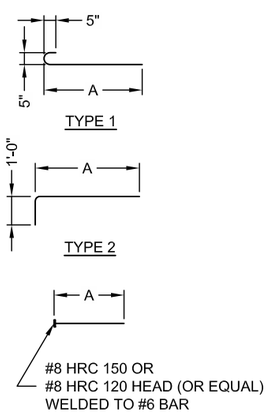

*NOTE: EPOXY COATING IS NOT REQUIRED ON HEADED ENDS OF TYPE 3 BARS, BUT WILL NOT BE DETRIMENTAL IF PROVIDED.

*NOTE: HRC HEADS PROVIDED BY HEADED REINFORCEMENT CORP.

*NOTE: AS DESIGNS REQUIRE, COMBINATIONS OF TYPE 1 HOOKED BARS AND TYPE 3 HEADED BARS MAY BE REPLACED WITH HOOKED REINFORCING BARS.

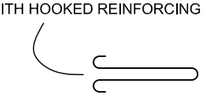

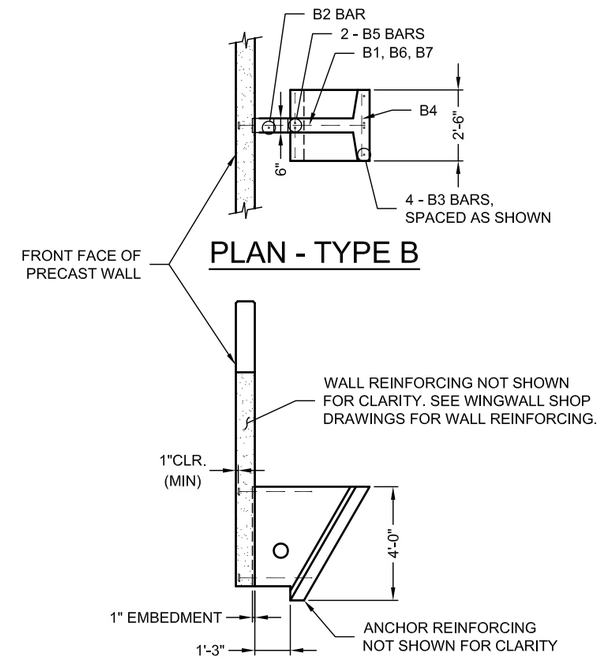

PLAN - TYPE B

SECTION - TYPE B

BAR LIST - TYPE B						
MARK	QTY.	SIZE	A	TYPE	LENGTH	FINISH
B1	2	#6	3'-0"	3	——	EPOXY*
B2	1	#5	——	STR.	3'-2"	BLACK
B3	4	#5	——	STR.	4'-3"	BLACK
B4	7	#5	——	STR.	2'-2"	BLACK
B5	2	#5	3'-8"	2	——	BLACK
B6	1	#5	2'-2"	1	——	BLACK
B7	1	#5	3'-7"	1	——	BLACK

NOTE: "STR." DENOTES STRAIGHT BAR. STANDARD CLEARANCE = 2"

THIS DRAWING IS THE PROPERTY OF CONTECH ENGINEERED SOLUTIONS, LLC, IT IS MADE FOR THE EXCLUSIVE USE OF CONTECH ENGINEERED SOLUTIONS, LLC. NEITHER THE DRAWING OR REPRODUCTION OF IT NOR INFORMATION DERIVED FROM IT IS TO BE GIVEN TO OTHERS WITH THE EXPRESSED CONSENT OF CONTECH ENGINEERED SOLUTIONS, LLC. NO USE IS TO BE MADE OF IT WHICH IS OR MAY BE IN ANY WAY INJURIOUS TO AND/OR CONTRARY TO THE INTERESTS OF CONTECH ENGINEERED SOLUTIONS, LLC. CONTECH ENGINEERED SOLUTIONS, LLC MAKES NO REPRESENTATION OR WARRANTIES AS TO ANY USE OF THIS DRAWING OTHER THAT WHICH CONTECH ENGINEERED SOLUTIONS, LLC ORIGINALLY INTENDED.

NOTE: DETAILS ON THIS SHEET ARE COVERED UNDER U.S. PATENT NUMBER US 7,001,110. D511,215.

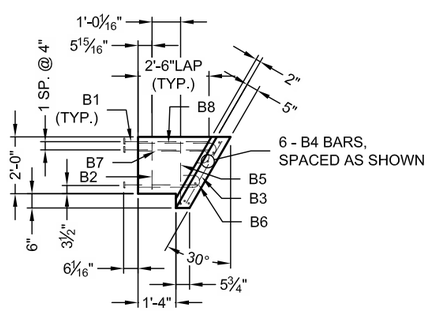

PRECAST ANCHOR TYPE A

TOTAL WEIGHT = .428 TONS

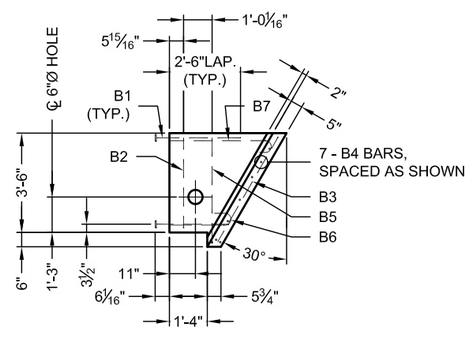

PRECAST ANCHOR TYPE B

TOTAL WEIGHT = .765 TONS

9 / 21 / 2017

Mark	Description	By	Chk'd.	Recm'd.	Date
	REVISIONS				

CONTECH ENGINEERED SOLUTIONS LLC
9025 CENTRE POINTE DR. WESTCHESTER, OHIO 45069
(513) 645-7000

CON/SPAN PRECAST STRUCTURE
STANDARD DETAIL DRAWING

PADOT DWG. # 86-353 PE (Change #2)

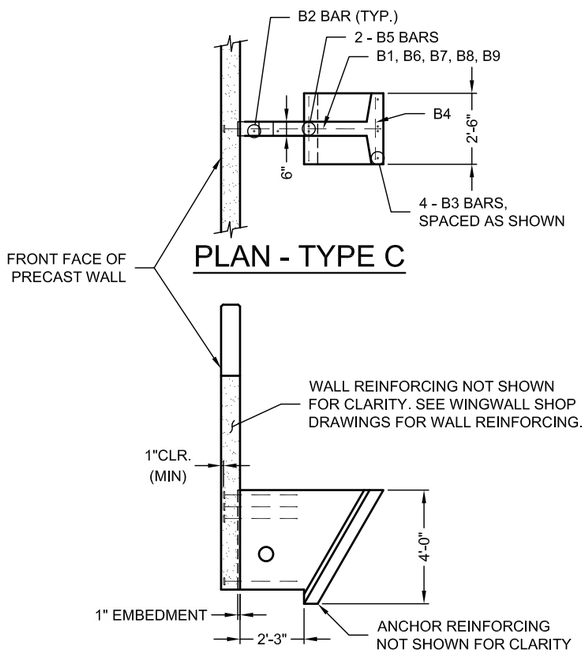

PLAN - TYPE C

SECTION - TYPE C

BAR LIST - TYPE C						
MARK	QTY.	SIZE	A	TYPE	LENGTH	FINISH
B1	4	#6	3'-0"	3	——	EPOXY*
B2	2	#5	——	STR.	3'-2"	BLACK
B3	4	#5	——	STR.	4'-3"	BLACK
B4	7	#5	——	STR.	2'-2"	BLACK
B5	2	#5	3'-8"	2	——	BLACK
B6	1	#5	3'-2"	1	——	BLACK
B7	1	#5	4'-2"	1	——	BLACK
B8	1	#5	4'-5"	1	——	BLACK
B9	1	#5	4'-8"	1	——	BLACK

NOTE: "STR." DENOTES STRAIGHT BAR. STANDARD CLEARANCE = 2"

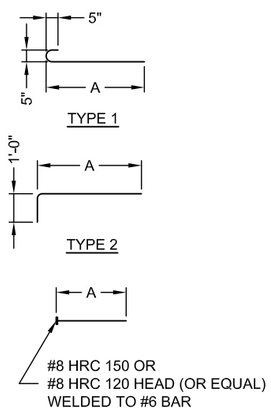

*NOTE: EPOXY COATING IS NOT REQUIRED ON HEADED ENDS OF TYPE 3 BARS, BUT WILL NOT BE DETRIMENTAL IF PROVIDED.

*NOTE: HRC HEADS PROVIDED BY HEADED REINFORCEMENT CORP.

*NOTE: AS DESIGNS REQUIRE, COMBINATIONS OF TYPE 1 HOOKED BARS AND TYPE 3 HEADED BARS MAY BE REPLACED WITH HOOKED REINFORCING BARS.

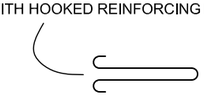

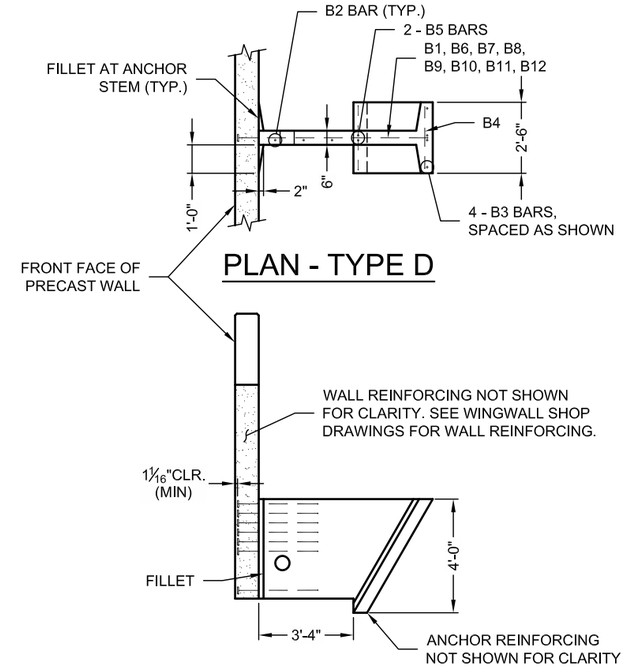

PLAN - TYPE D

SECTION - TYPE D

BAR LIST - TYPE D						
MARK	QTY.	SIZE	A	TYPE	LENGTH	FINISH
B1	7	#6	3'-0"	3	——	EPOXY*
B2	3	#5	——	STR.	3'-2"	BLACK
B3	4	#5	——	STR.	4'-3"	BLACK
B4	9	#5	——	STR.	2'-2"	BLACK
B5	2	#5	3'-8"	2	——	BLACK
B6	1	#5	4'-2"	1	——	BLACK
B7	1	#5	4'-8"	1	——	BLACK
B8	1	#5	4'-10"	1	——	BLACK
B9	1	#5	5'-1"	1	——	BLACK
B10	1	#5	5'-3"	1	——	BLACK
B11	1	#5	5'-5"	1	——	BLACK
B12	1	#5	5'-8"	1	——	BLACK

NOTE: "STR." DENOTES STRAIGHT BAR. STANDARD CLEARANCE = 2"

THIS DRAWING IS THE PROPERTY OF CONTECH ENGINEERED SOLUTIONS, LLC, IT IS MADE FOR THE EXCLUSIVE USE OF CONTECH ENGINEERED SOLUTIONS, LLC. NEITHER THE DRAWING OR REPRODUCTION OF IT NOR INFORMATION DERIVED FROM IT IS TO BE GIVEN TO OTHERS WITH THE EXPRESSED CONSENT OF CONTECH ENGINEERED SOLUTIONS, LLC. NO USE IS TO BE MADE OF IT WHICH IS OR MAY BE IN ANY WAY INJURIOUS TO AND/OR CONTRARY TO THE INTERESTS OF CONTECH ENGINEERED SOLUTIONS, LLC. CONTECH ENGINEERED SOLUTIONS, LLC MAKES NO REPRESENTATION OR WARRANTIES AS TO ANY USE OF THIS DRAWING OTHER THAT WHICH CONTECH ENGINEERED SOLUTIONS, LLC ORIGINALLY INTENDED.

NOTE: DETAILS ON THIS SHEET ARE COVERED UNDER U.S. PATENT NUMBER US 7,001,110. D511,215.

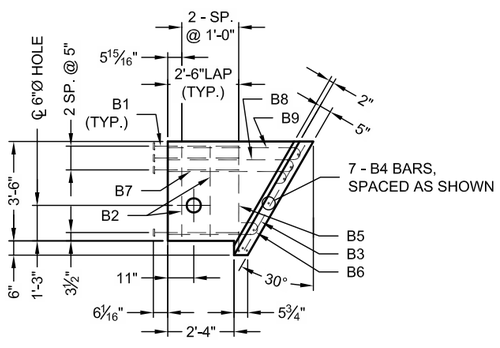

PRECAST ANCHOR TYPE C

TOTAL WEIGHT = .896 TONS

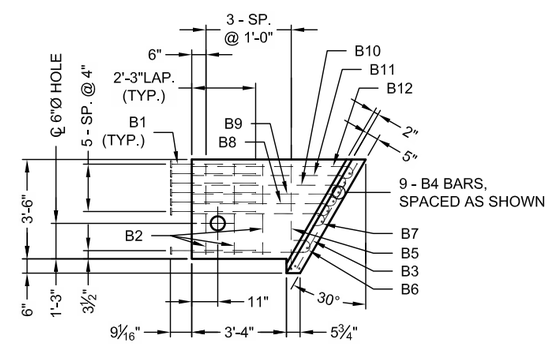

PRECAST ANCHOR TYPE D

TOTAL WEIGHT = 1.028 TONS

9 / 21 / 2017

Mark	Description	By	Chk'd.	Recm'd.	Date
	REVISIONS				

CONTECH ENGINEERED SOLUTIONS LLC
9025 CENTRE POINTE DR. WESTCHESTER, OHIO 45069
(513) 645-7000

CON/SPAN PRECAST STRUCTURE
STANDARD DETAIL DRAWING

PADOT DWG. # 86-353 PE (Change #2)

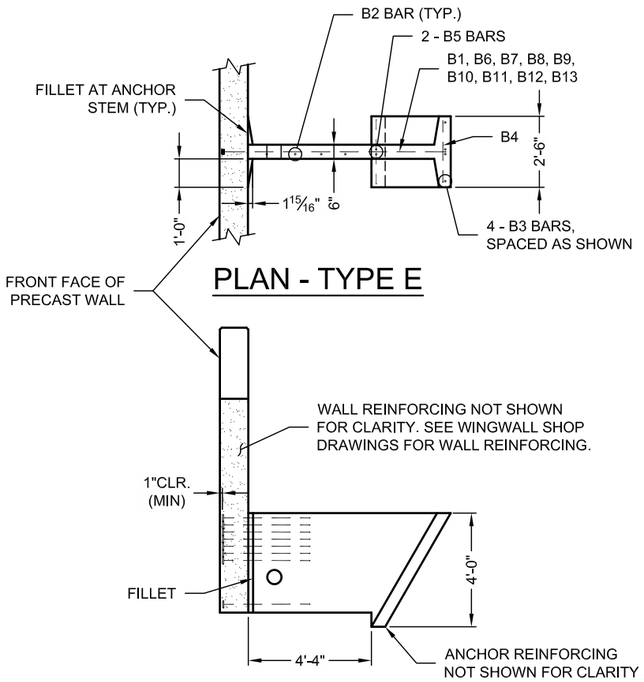

PLAN - TYPE E

SECTION - TYPE E

BAR LIST - TYPE E						
MARK	QTY.	SIZE	A	TYPE	LENGTH	FINISH
B1	8	#6	3'-0"	3	——	EPOXY*
B2	4	#5	——	STR.	3'-2"	BLACK
B3	4	#5	——	STR.	4'-3"	BLACK
B4	11	#5	——	STR.	2'-2"	BLACK
B5	2	#5	3'-8"	2	——	BLACK
B6	1	#5	5'-2"	1	——	BLACK
B7	1	#5	5'-9"	1	——	BLACK
B8	1	#5	5'-11"	1	——	BLACK
B9	1	#5	6'-1"	1	——	BLACK
B10	1	#5	6'-3"	1	——	BLACK
B11	1	#5	6'-5"	1	——	BLACK
B12	1	#5	6'-6"	1	——	BLACK
B13	1	#5	6'-8"	1	——	BLACK

NOTE: "STR." DENOTES STRAIGHT BAR. STANDARD CLEARANCE = 2"

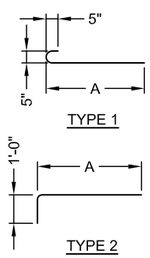

*NOTE: EPOXY COATING IS NOT REQUIRED ON HEADED ENDS OF TYPE 3 BARS, BUT WILL NOT BE DETRIMENTAL IF PROVIDED.

*NOTE: HRC HEADS PROVIDED BY HEADED REINFORCEMENT CORP.

*NOTE: AS DESIGNS REQUIRE, COMBINATIONS OF TYPE 1 HOOKED BARS AND TYPE 3 HEADED BARS MAY BE REPLACED WITH HOOKED REINFORCING BARS.

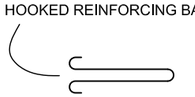

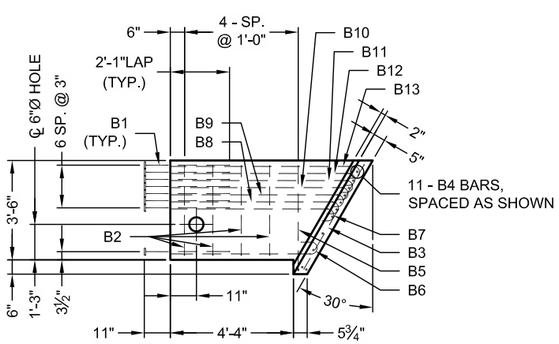

PRECAST ANCHOR TYPE E

TOTAL WEIGHT = 1.159 TONS

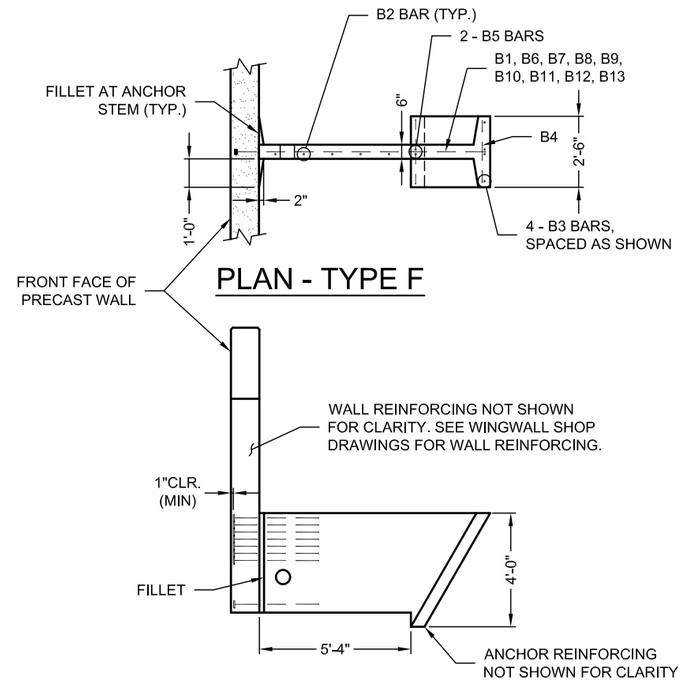

PLAN - TYPE F

SECTION - TYPE F

BAR LIST - TYPE F						
MARK	QTY.	SIZE	A	TYPE	LENGTH	FINISH
B1	8	#6	3'-5"	3	——	EPOXY*
B2	5	#5	——	STR.	3'-2"	BLACK
B3	4	#5	——	STR.	4'-3"	BLACK
B4	10	#5	——	STR.	2'-2"	BLACK
B5	2	#5	3'-8"	2	——	BLACK
B6	1	#5	6'-2"	1	——	BLACK
B7	1	#5	6'-9"	1	——	BLACK
B8	1	#5	6'-11"	1	——	BLACK
B9	1	#5	7'-1"	1	——	BLACK
B10	1	#5	7'-3"	1	——	BLACK
B11	1	#5	7'-5"	1	——	BLACK
B12	1	#5	7'-6"	1	——	BLACK
B13	1	#5	7'-8"	1	——	BLACK

NOTE: "STR." DENOTES STRAIGHT BAR. STANDARD CLEARANCE = 2"

THIS DRAWING AS THE PROPERTY OF CONTECH ENGINEERED SOLUTIONS, LLC, IT IS MADE FOR THE EXCLUSIVE USE OF CONTECH ENGINEERED SOLUTIONS, LLC. NEITHER THE DRAWING OR REPRODUCTION OF IT NOR INFORMATION DERIVED FROM IT IS TO BE GIVEN TO OTHERS WITH THE EXPRESSED CONSENT OF CONTECH ENGINEERED SOLUTIONS, LLC. NO USE IS TO BE MADE OF IT WHICH IS OR MAY BE IN ANY WAY INJURIOUS TO AND/OR CONTRARY TO THE INTERESTS OF CONTECH ENGINEERED SOLUTIONS, LLC. CONTECH ENGINEERED SOLUTIONS, LLC MAKES NO REPRESENTATION OR WARRANTIES AS TO ANY USE OF THIS DRAWING OTHER THAT WHICH CONTECH ENGINEERED SOLUTIONS, LLC ORIGINALLY INTENDED.

NOTE: DETAILS ON THIS SHEET ARE COVERED UNDER U.S. PATENT NUMBER US 7,001,110. D511,215.

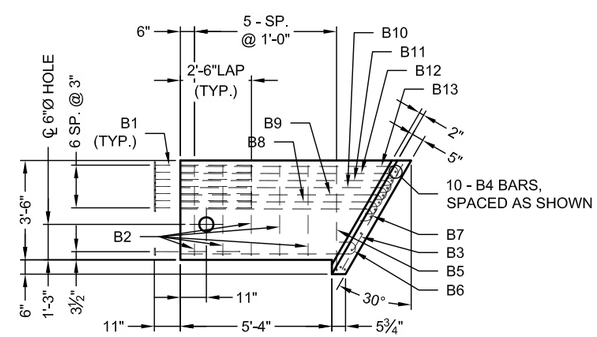

PRECAST ANCHOR TYPE F

TOTAL WEIGHT = 1.290 TONS

9 / 21 / 2017

Mark	Description	By	Chk'd.	Recm'd.	Date
	REVISIONS				

CONTECH ENGINEERED SOLUTIONS LLC
9025 CENTRE POINTE DR. WESTCHESTER, OHIO 45069
(513) 645-7000

CON/SPAN PRECAST STRUCTURE
STANDARD DETAIL DRAWING

PADOT DWG. # 86-353 PE (Change #2)

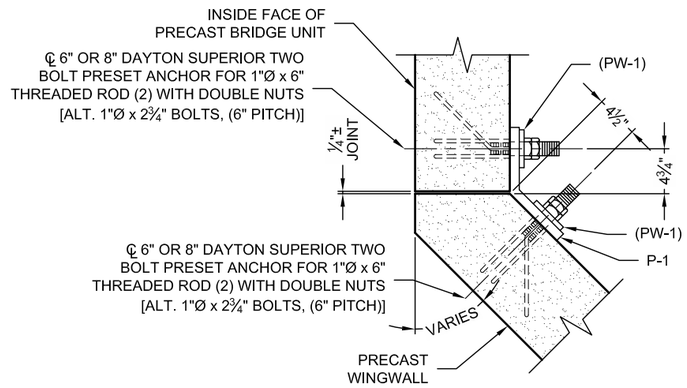

PLAN VIEW

TYPICAL CONNECTION DETAIL - P-1

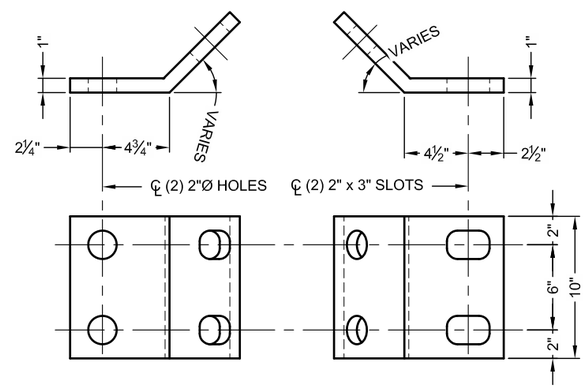

UNIT LEG WINGWALL LEG

P-1

(℗, 1" x 14" x 10") - PLATE SIZE MAY VARY BASED ON CONNECTION GEOMETRY
(GALVANIZED AS PER ASTM A123)

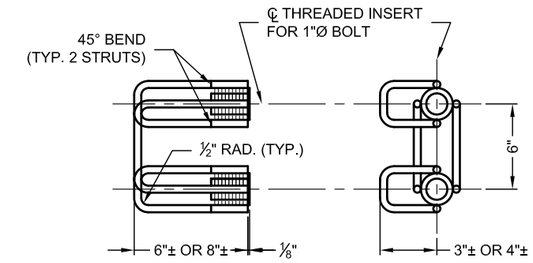

SIDE VIEW FRONT VIEW

DAYTON SUPERIOR TWO BOLT PRESET ANCHOR

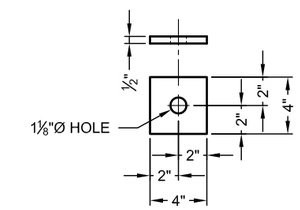

PW-1

(℗ WASHER, ½" x 4" x 4")
(GALVANIZED AS PER ASTM A123)

THIS DRAWING IS THE PROPERTY OF CONTECH ENGINEERED SOLUTIONS, LLC, IT IS MADE FOR THE EXCLUSIVE USE OF CONTECH ENGINEERED SOLUTIONS, LLC. NEITHER THE DRAWING OR REPRODUCTION OF IT NOR INFORMATION DERIVED FROM IT IS TO BE GIVEN TO OTHERS WITH THE EXPRESSED CONSENT OF CONTECH ENGINEERED SOLUTIONS, LLC. NO USE IS TO BE MADE OF IT WHICH IS OR MAY BE IN ANY WAY INJURIOUS TO AND/OR CONTRARY TO THE INTERESTS OF CONTECH ENGINEERED SOLUTIONS, LLC. CONTECH ENGINEERED SOLUTIONS, LLC MAKES NO REPRESENTATION OR WARRANTIES AS TO ANY USE OF THIS DRAWING OTHER THAT WHICH CONTECH ENGINEERED SOLUTIONS, LLC ORIGINALLY INTENDED.

9 / 21 / 2017

Mark	Description	By	Chk'd.	Recm'd.	Date
REVISIONS					

CONTECH ENGINEERED SOLUTIONS LLC
9025 CENTRE POINTE DR. WESTCHESTER, OHIO 45069
(513) 645-7000

CON/SPAN PRECAST STRUCTURE
STANDARD DETAIL DRAWING

PADOT DWG. # 86-353 PE (Change #2)

Product:

Item 9000-7033 – Superior Transparent Sound Barrier System
Superior Transparent Noise Barriers, LLC
PennDOT Drawing # 2017-332 (REV.1)

Approval Date:	**Initiated By SOL:**
April 26, 2018	483-18-01
Revision 1 - September 19, 2019	483-19-03

Application/Use:

Superior Transparent Sound Barrier System manufactured by Superior Transparent Noise Barriers, LLC of Ardmore, PA has been approved for use as an "**Alternate"** or "**As-designed"** sound barrier. This wall has transparent panels. The use as an "Alternate" or "As-designed" sound barrier is at the discretion of the District Executive.

Superior Transparent Sound Barrier System has the following restrictions:

- Maximum panel height: 13 ft. – 3 ½ in.
- Maximum wall height and post spacing

Bridge barrier mounted:
Wall height: 2 ft. thru 9 ft.; Post spacing: 10 ft.
Wall height: >9 ft. thru 10 ft.; Post spacing: 8 ft.

Retaining wall barrier or moment slab barrier mounted:
Wall height: 2 ft. thru 12 ft.; Post spacing: 10 ft.
Wall height: >12 ft. thru 13 ft.; Post spacing: 8 ft.

Retaining wall mounted:
Wall height: 2 ft. thru 13 ft.; Post spacing: 10 ft.
Wall height: >13 ft. thru 14 ft.; Post spacing: 8 ft.

This sound barrier wall system meets both AASHTO and Design Manual, Part 4 design criteria.

Specifications:

Design/Material/Construction Specifications for this post and panel sound barrier wall system are specified on PennDOT Drawing # 2017-332 (REV. 1), dated 9/19/2019. In addition, see applicable sections of Publication 408, Section 1086 – SOUND BARRIERS.

Comments:

On those projects permitting the use of this system as an alternate, a special provision should be included in the proposal to indicate that the "Superior Transparent Sound Barrier System" as an alternate is allowed.

The contractor will be required to revise the pertinent contract drawings as per DM-4M, PP 1.10 to show the usage of "Superior Transparent Sound Barrier System" and will also be required to reimburse the Department a fee of $1,000 per design for the review and approval of the revision. This should be specified in the contract's Special Provisions.

GENERAL NOTES:

1. CONSTRUCTION SPECIFICATIONS AND WORKMANSHIP: PROVIDE MATERIALS AND PERFORM WORK IN ACCORDANCE WITH THE CURRENT VERSION OF PENNSYLVANIA DEPARTMENT OF TRANSPORTATION PUBLICATION 408, AASHTO/AWS/D1.5-BRIDGE WELDING CODE, AND THE CONTRACT SPECIAL PROVISIONS. USE AASHTO/AWS/D1.1 FOR WELDING NOT COVERED IN AASHTO/AWS/D1.5.

2. DESIGN SPECIFICATIONS:
   - PENNDOT DESIGN MANUAL, PART 4, STRUCTURES, APRIL 2015 EDITION
   - 1989 AASHTO "GUIDE SPECIFICATIONS FOR STRUCTURAL DESIGN OF SOUND BARRIERS", INCLUDING THE 1992 AND 2002 INTERIMS.
   - 2002 AASHTO "STANDARD SPECIFICATIONS FOR HIGHWAY BRIDGES", 17TH EDITION
   - 2001 AASHTO "STANDARD SPECIFICATIONS FOR STRUCTURAL SUPPORTS FOR HIGHWAY SIGNS, LUMINAIRES, AND TRAFFIC SIGNALS", 4TH EDITION, INCLUDING INTERIMS THRU 2006.
   - AISC STEEL CONSTRUCTION MANUAL, 14TH EDITION
   - DESIGN IS IN ACCORDANCE WITH THE WORKING STRESS METHOD, WITH NO INCREASE IN ALLOWABLE UNIT STRESSES, EXCEPT FOR GROUP III (SEISMIC) LOADINGS WHICH PERMIT A 33% OVERSTRESS.
   - PENNDOT STANDARD DRAWINGS BD-679M & BC-779M.
   - ACRYLITE® SOUNDSTOP GS CC NOISE BARRIER SHEET: REFER TO PRODUCT SPECIFICATIONS BY EVONIK CYRO LLC, 299 JEFFERSON ROAD, PARSIPPANY, NJ 07054.

3. DESIGN LOADS:

		ALLOWABLE OVERSTRESS
GROUP I :	D+E+SC	100%
GROUP II :	D+W+SC+E	100%
GROUP III :	D+EQD+E	133%
GROUP IV :	D+W+E+I	100%

   WHERE D = DEAD LOAD
   E = LATERAL EARTH PRESSURE (= 0)
   SC = LIVE LOAD SURCHARGE (= 0)
   W = WIND LOAD (= 37 PSF)
   EQD = SEISMIC DEAD LOAD (ACCELERATION COEFFICIENT "A" = 0.15)
   I = ICE AND SNOW LOAD (= 3 PSF APPLIED TO ONE SIDE OF PANEL AND POST)

4. DESIGN CRITERIA:
   - POSTS & HORIZONTAL BRACING DEFLECTION LIMITED TO LENGTH DIVIDED BY 360.
   - PANEL DEFLECTION LIMITED TO 3" AND PANEL STRESS LIMITED TO 1500 PSI.

5. MATERIALS:
   A. W POST SECTIONS: ASTM A572 OR ASTM A709, GRADE 50 OR GRADE 36
   B. ANGLES: ASTM A36, GRADE 36
   C. PLATES: ASTM A572 OR ASTM A709, GRADE 50
   D. HSS TUBES: ASTM A500 GRADE B (Fy = 46 KSI)
   E. HARDWARE:
      BOLTS: ASTM F3125 GRADE A325 TYPE 1
      NUTS: ASTM A563
      WASHERS: ASTM F436 OR A572 GRADE 50
      PROVIDE LOCK NUTS ON ALL CONNECTIONS, UNLESS OTHERWISE NOTED.

   F. GALVANIZE ALL STEEL AND HARDWARE IN ACCORDANCE WITH ASTM A123 OR A153. CLEAN AND PREPARE GALVANIZED SURFACES IN ACCORDANCE WITH 1060.3(b)4 OF PUBLICATION 408 AND MANUFACTURER'S REQUIREMENTS FOR COATING GALVANIZED METAL, WHEN ADDITIONAL COATINGS ARE REQUIRED.

   G. SAFETY CABLES: 3/16" DIA. 7x19 CABLE (GALVANIZED AIRCRAFT CABLE, ASTM A1023) MINIMUM BREAKING STRENGTH OF 3000 LBS. USE LOCK NUTS. 4 REQUIRED PER PANEL - ONE IN EACH CORNER.

   H. ACRYLIC PANELS: ALL PANELS SHALL BE ACRYLITE® SOUNDSTOP GS CC ACRYLIC PANELS.

6. ALL DIMENSIONS SHOWN ARE HORIZONTAL OR VERTICAL, EXCEPT AS NOTED.

7. POSTS TO BE SET TRULY VERTICAL. POST SPACINGS SHOWN ON PLAN VIEWS ARE TRUE HORIZONTAL, EXCEPT AS NOTED OTHERWISE.

8. STRUCTURE DIMENSIONS SHOWN ARE FOR A NORMAL TEMPERATURE OF 68 DEGREES F.

9. USE AN OVERSIZED FLAT WASHER TO COMPLETELY COVER THE HOLE AT ALL SLOTTED HOLE LOCATIONS PER RCSC. AT POST INTERFERENCE LOCATIONS, CLIP WASHERS AS NEEDED TO FIT. USE ASTM F436 FOR STANDARD, OVERSIZED OR SHORT-SLOTTED HOLES.

10. SUPERIOR TRANSPARENT SOUND BARRIER SYSTEM HAS NOT BEEN DESIGNED FOR A VEHICLE IMPACT LOAD.

11. BOLTED CONNECTIONS ARE SLIP CRITICAL PER AISC/RCSC WHERE NOTED. SLIP CRITICAL CONNECTIONS ARE DESIGNED USING A MEAN SLIP COEFFICIENT OF 0.19 FOR CLEAN HOT-DIP GALVANIZED SURFACES PER AISC/RCSC. THE HOT-DIP GALVANIZED SURFACES DO NOT NEED TO BE ROUGHENED BY MEANS OF HAND WIRE BRUSHING.

12. ALL BOLTS ARE 5/8"Ø ASTM F3125 GRADE A325 UNLESS NOTED OTHERWISE. BOLTS SHALL BE PRETENSIONED WITH THE TURN-OF-NUT METHOD PER THE LATEST VERSION OF THE "SPECIFICATIONS FOR STRUCTURAL JOINTS USING HIGH STRENGTH BOLTS" BY THE RESEARCH COUNCIL ON STRUCTURAL CONNECTIONS (RCSC) UNLESS NOTED OTHERWISE.

13. POSTS MUST BE INSTALLED WITHIN ±1/4" OF THE DIMENSIONS SPECIFIED IN THE PLAN. VARIANCES FROM POST TO POST CANNOT ADD UP TO MORE THAN ±1/4". THIS TOLERANCE APPLIES TO BOTH TOP AND BOTTOM OF THE POST.

14. SEE PENNDOT STANDARD DRAWINGS (BD-679M & BC-779M) FOR POST CONNECTION TO THE CONCRETE BARRIER/RETAINING WALL.

15. W8x48 STEEL POST DETAILED. ADJUST DIMENSIONS AS NECESSARY IF LARGER POST IS REQUIRED PER BD-679M.

16. APPROXIMATE WEIGHT OF SUPERIOR TRANSPARENT SOUND BARRIER SYSTEM: (ASSUMES MAX. POST SPACING & MAX. HEIGHT)

    SYSTEM #1: 265 LB/FT
    SYSTEM #2: 165 LB/FT
    SYSTEM #3: 250 LB/FT

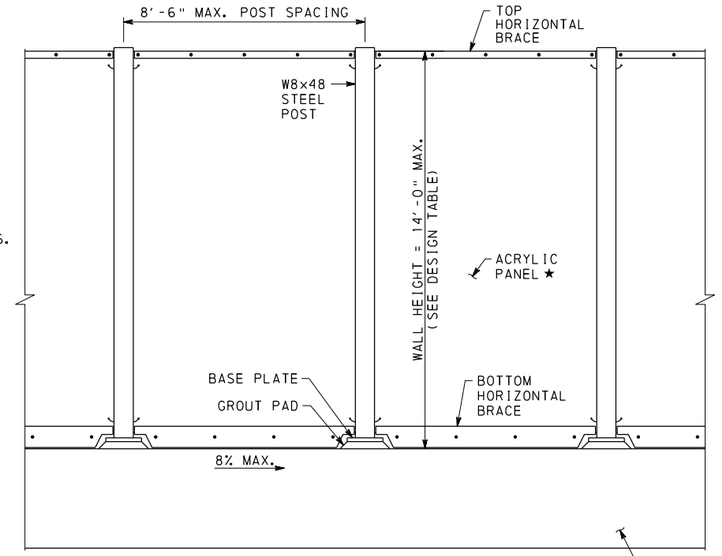

SYSTEM #1
ELEVATION - STRUCTURE MOUNTED ACRYLIC SOUND BARRIER
8'-6" MAX. POST SPACING, 14'-0" MAX. WALL HEIGHT

1' 0' 1' 2' 3'

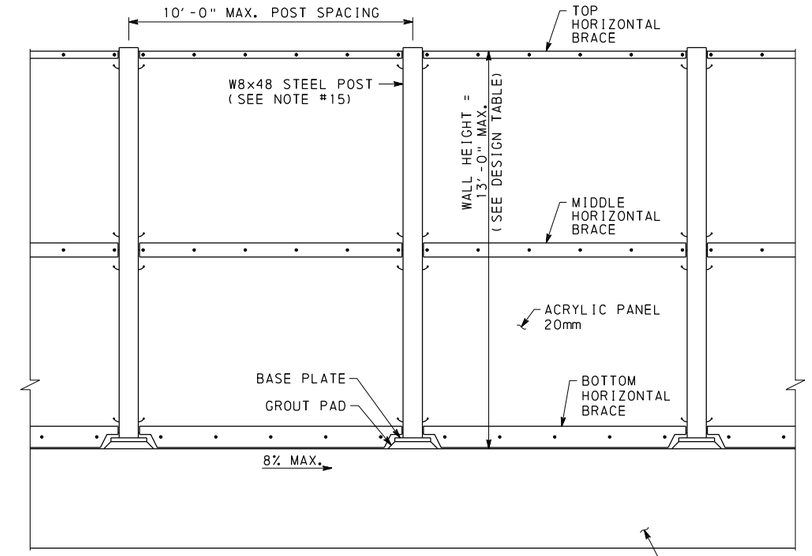

SYSTEM #3
ELEVATION - STRUCTURE MOUNTED ACRYLIC SOUND BARRIER
10'-0" MAX. POST SPACING, 13'-0" MAX. WALL HEIGHT

1' 0' 1' 2' 3'

★ 25mm IF 10' < WALL HEIGHT ≤ 14'
20mm IF WALL HEIGHT ≤ 10'

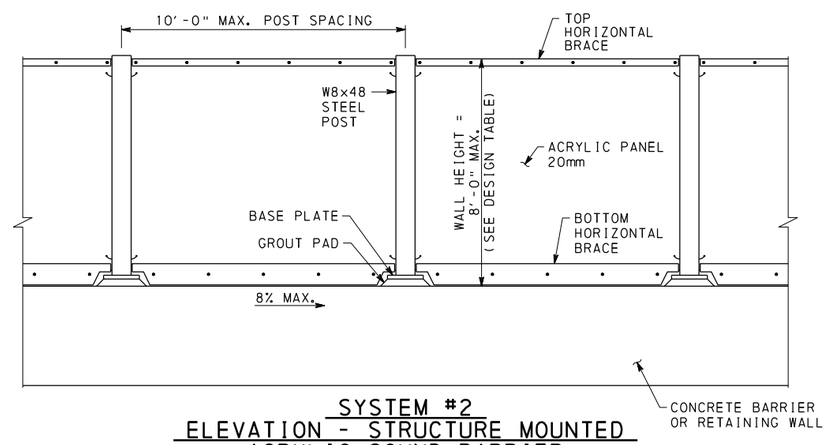

SYSTEM #2
ELEVATION - STRUCTURE MOUNTED ACRYLIC SOUND BARRIER
10'-0" MAX. POST SPACING, 8'-0" MAX. WALL HEIGHT

1' 0' 1' 2' 3'

DESIGN TABLE

SOUND BARRIER MOUNTED ON	WALL HEIGHT	POST SPACING	SYSTEM
TRAFFIC BARRIER ON BRIDGE	9'-0" MAX.	8'-6" MAX.	#1
	10'-0" MAX.	8'-0" MAX.	#1
	8'-0" MAX.	10'-0" MAX.	#2
	9'-0" MAX.	10'-0" MAX.	#3
TRAFFIC BARRIER ON RETAINING WALLS OR MOMENT SLABS	12'-0" MAX.	8'-6" MAX.	#1
	13'-0" MAX.	8'-0" MAX.	#1
	8'-0" MAX.	10'-0" MAX.	#2
	12'-0" MAX.	10'-0" MAX.	#3
RETAINING WALL	14'-0" MAX.	8'-6" MAX.	#1
	8'-0" MAX.	10'-0" MAX.	#2
	13'-0" MAX.	10'-0" MAX.	#3

Mark	Description	By	Chk'd.	Recm'd.	Date
REVISIONS					

PENNDOT DRAWING # 2017-332 (REV.1)

9/19/2019

PENNSYLVANIA DEPARTMENT OF TRANSPORTATION RECOMMENDED
Thomas P Macioce
CHIEF BRIDGE ENGINEER

COMMONWEALTH OF PENNSYLVANIA
REGISTERED PROFESSIONAL ENGINEER
KRISTINA JO MATTLIN
No. PE-079435
3/21/2019

COMMONWEALTH OF PENNSYLVANIA
DEPARTMENT OF TRANSPORTATION

SUPERIOR TRANSPARENT SOUND BARRIER SYSTEM

GENERAL NOTES

JMT

SUPERIOR TRANSPARENT NOISE BARRIERS, LLC
220 GOLFVIEW ROAD
ARDMORE, PA 19003

SHEET 1 OF 6

FILE: Q:\2017\170283_001_Superior_Transparent\CADD\Structures\Option 2\Notes.dgn
DATE: 3/21/2019

DES: KJM | DWG: ALC | CKD: GCF

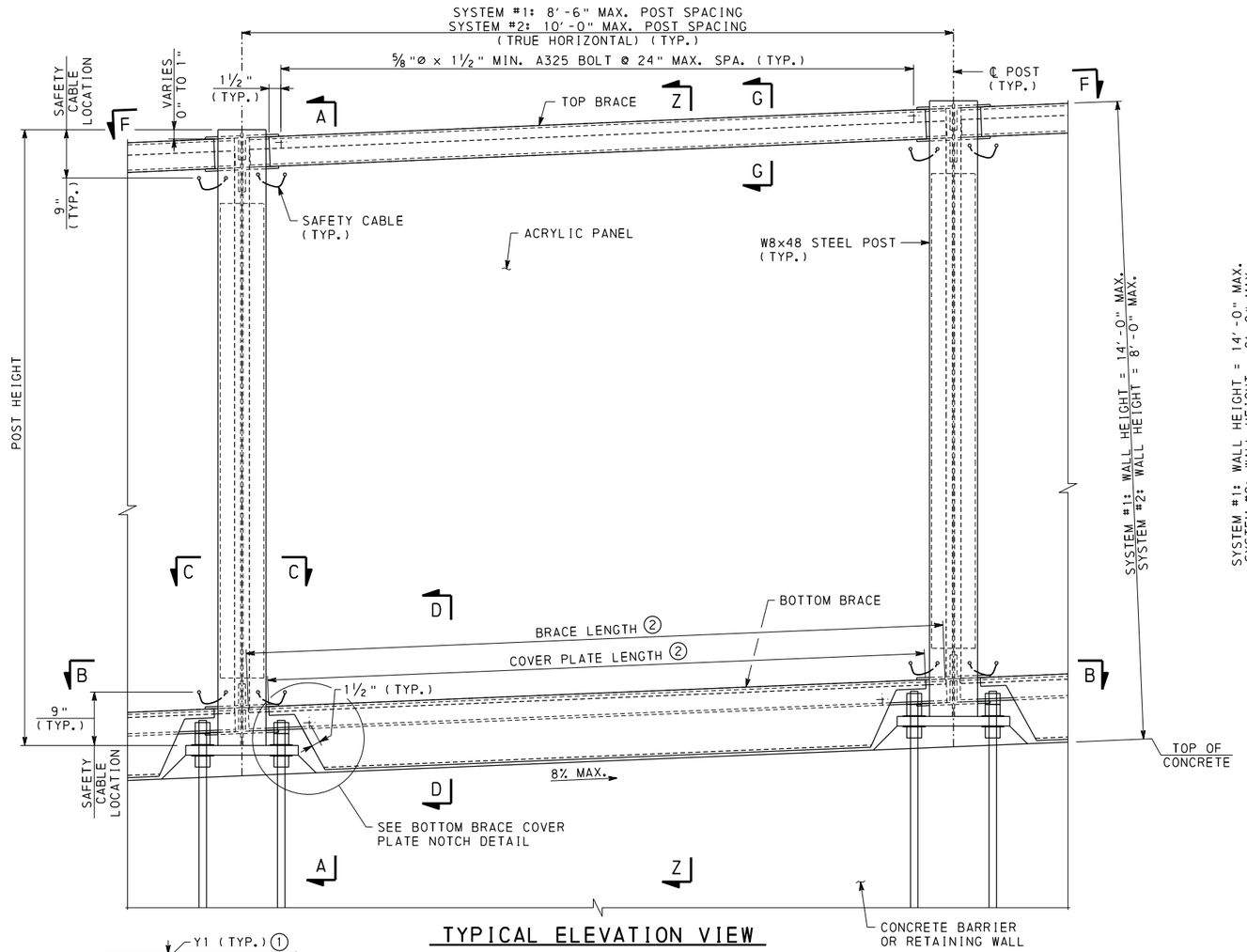

TYPICAL ELEVATION VIEW

N. T. S.

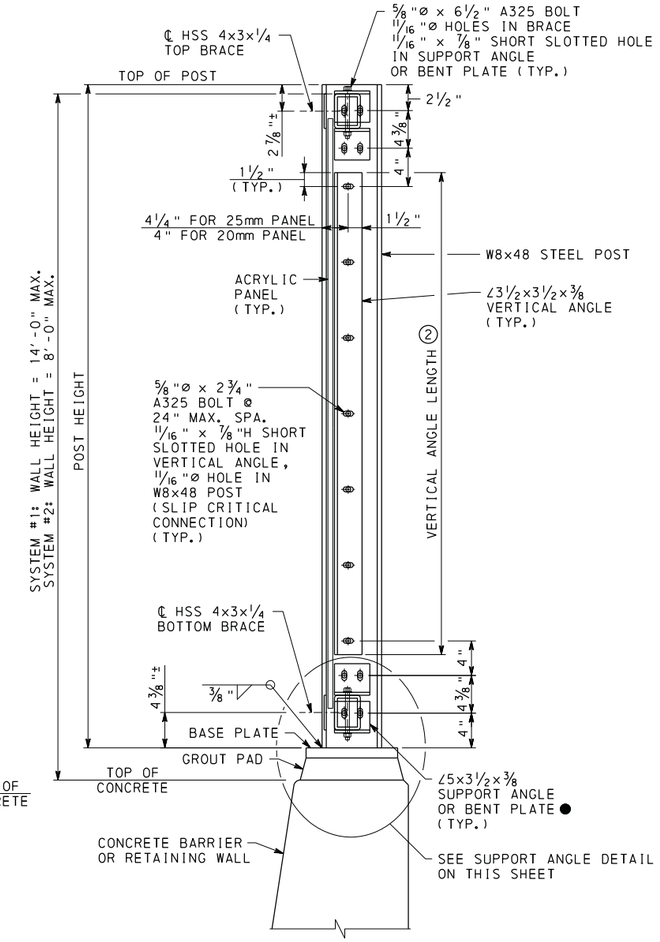

SECTION A-A

N. T. S.

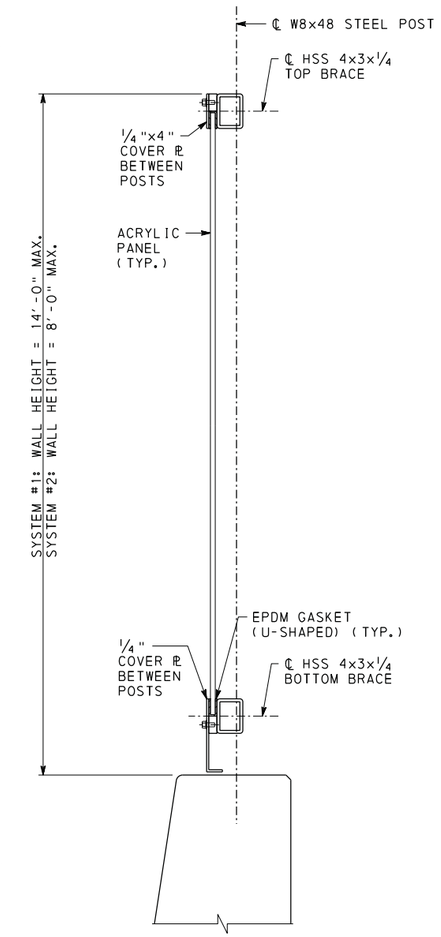

SECTION Z-Z

N. T. S.

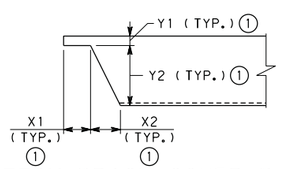

BOTTOM BRACE COVER PLATE NOTCH DETAIL

N. T. S.

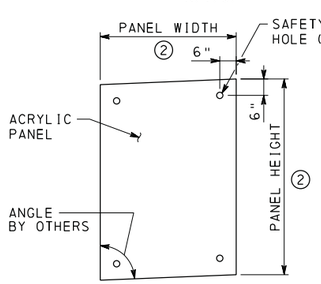

PANEL DIMENSIONS

N. T. S.

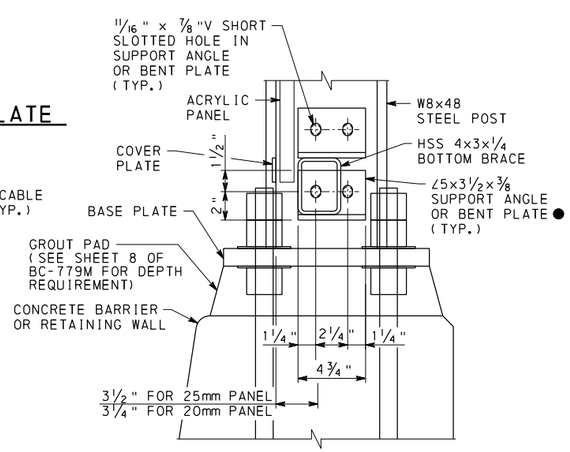

SUPPORT ANGLE DETAIL

N. T. S.

LEGEND:

① X1, X2, Y1, Y2 = COVER PLATE NOTCH DIMENSIONS TO BE DESIGNED BY OTHERS BASED ON BASE PLATE, GROUT PAD AND SLOPE OF BARRIER/WALL TO CLEAR ANCHOR BOLT.
X1 = 2" MIN., 4 1/4" MAX. X2 = 3" MIN., 7" MAX.
Y1 = 1" MIN., 3 1/2" MAX. Y2 = 5" MIN., 10 1/2" MAX.

② BRACE LENGTH = POST SPACING MINUS 4 1/2"
COVER PLATE LENGTH = POST SPACING MINUS 9 1/2"

VERTICAL ANGLE LENGTH = POST HEIGHT MINUS 1'-8 1/4"
PANEL WIDTH = POST SPACING MINUS 2 1/2"
PANEL HEIGHT = POST HEIGHT MINUS 8 1/2"

ALL LENGTHS TO BE VERIFIED BY DESIGNER

● USE SUPPORT ANGLE FOR 90° ANGLE.
USE BENT PLATE FOR ALL OTHER ANGLES.

NOTE:
FOR SECTIONS B-B, C-C, D-D, F-F, & G-G, SEE SHEET 4.

Mark	Description	By	Chk'd.	Recm'd.	Date
REVISIONS					

PENNDOT DRAWING # 2017-332 (REV.1)

COMMONWEALTH OF PENNSYLVANIA
DEPARTMENT OF TRANSPORTATION

SUPERIOR TRANSPARENT SOUND BARRIER SYSTEM

TYPICAL BAY DETAILS FOR SYSTEMS #1 & #2

9/19/2019

COMMONWEALTH OF PENNSYLVANIA REGISTERED PROFESSIONAL KRISTINA JO MATTLIN ENGINEER No. PE-075435 3/21/2019

JMT

SUPERIOR TRANSPARENT NOISE BARRIERS, LLC
220 GOLFVIEW ROAD
ARDMORE, PA 19003

SHEET 2 OF 6

FILE: Q:\2017\170283_001_Superior_Transparent\CADD\Structures\Option 2\Details01.dgn
DATE: 3/21/2019

DES: GCF | DWG: ALC | CKD: KJM

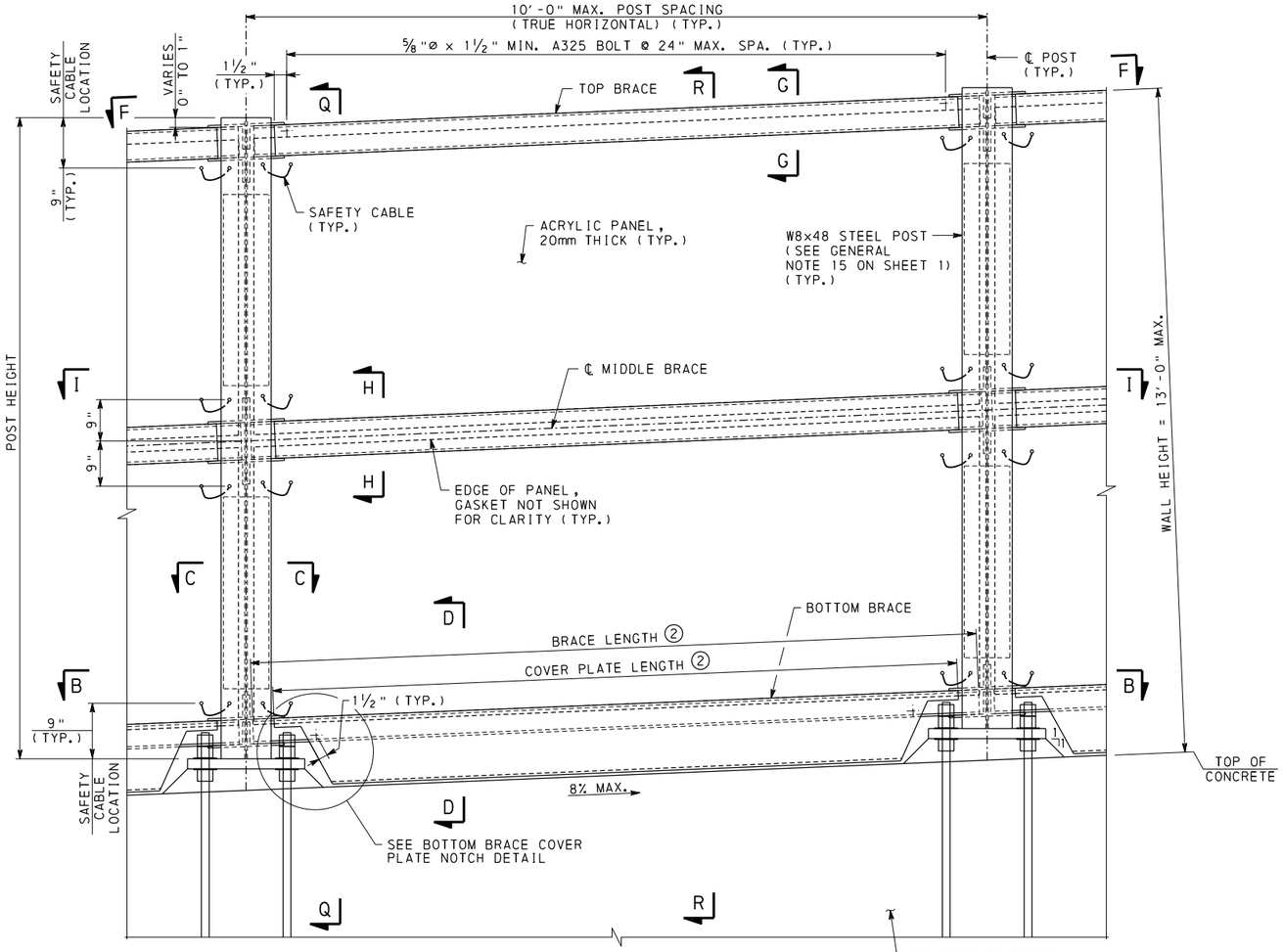

TYPICAL ELEVATION VIEW

N. T. S.

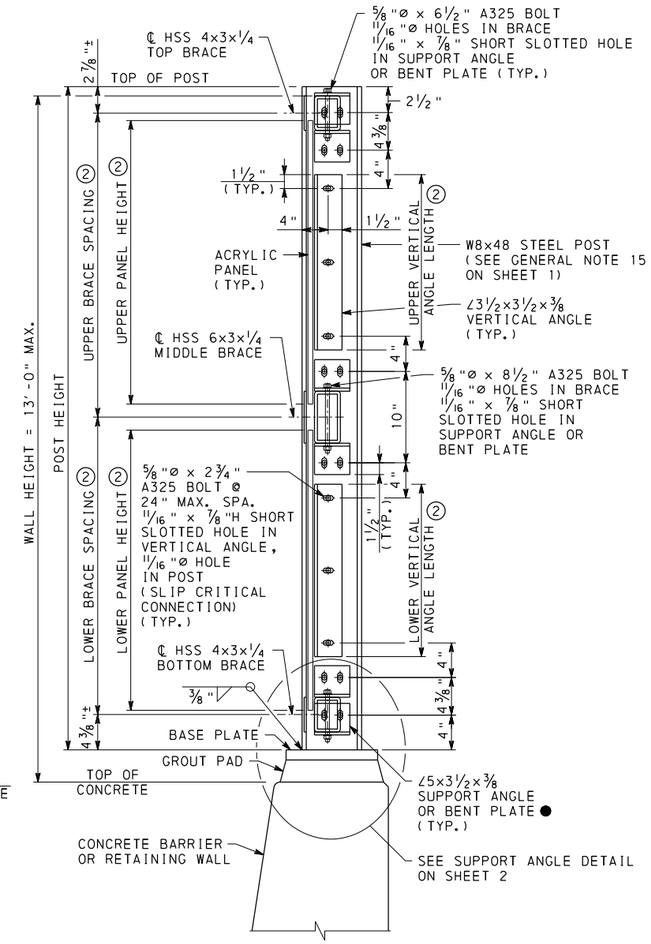

SECTION Q-Q

N. T. S.

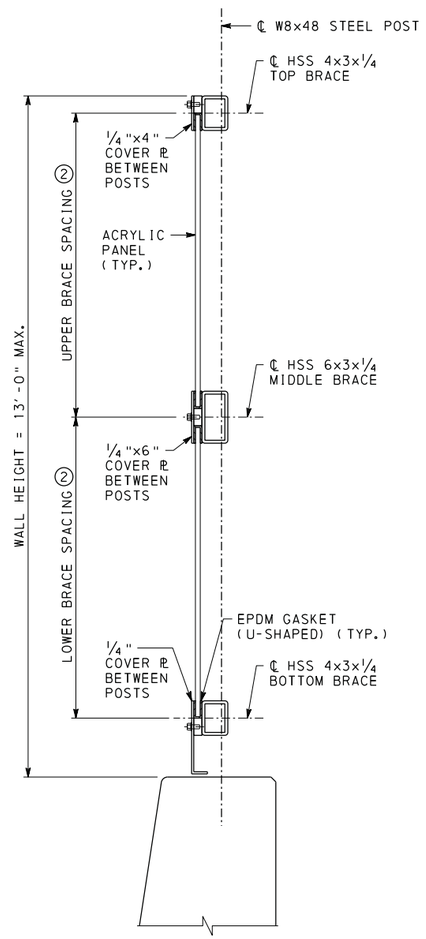

SECTION R-R

N. T. S.

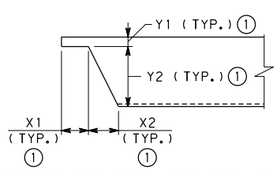

BOTTOM BRACE COVER PLATE NOTCH DETAIL

N. T. S.

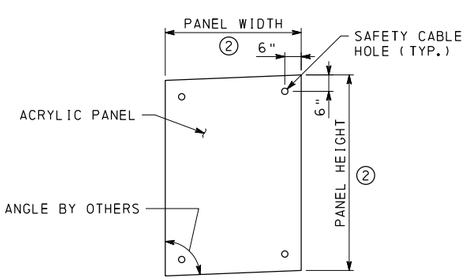

PANEL DIMENSIONS

N. T. S.

LEGEND:

① X1, X2, Y1, Y2 = COVER PLATE NOTCH DIMENSIONS TO BE DESIGNED BY OTHERS BASED ON BASE PLATE, GROUT PAD AND SLOPE OF BARRIER/WALL TO CLEAR ANCHOR BOLT.
X1 = 2" MIN., 4 1/4" MAX. X2 = 3" MIN., 7" MAX.
Y1 = 1" MIN., 3 1/2" MAX. Y2 = 5" MIN., 10 1/2" MAX.

② BRACE LENGTH = POST SPACING MINUS 4 1/2"
COVER PLATE LENGTH = POST SPACING MINUS 9 1/2"
UPPER & LOWER BRACE SPACING: POST HEIGHT MINUS 7 1/4"± DIVIDED BY 2 (MAY BE MODIFIED BY DESIGNER, NOT TO EXCEED 8'-0")
UPPER VERTICAL ANGLE LENGTH = UPPER BRACE SPACING MINUS 1'-2"
LOWER VERTICAL ANGLE LENGTH = LOWER BRACE SPACING MINUS 1'-2"
PANEL WIDTH = POST SPACING MINUS 2 1/2"
PANEL HEIGHT = BRACE SPACING MINUS 2 1/2"

ALL LENGTHS TO BE VERIFIED BY DESIGNER

● USE SUPPORT ANGLE FOR 90° ANGLE.
USE BENT PLATE FOR ALL OTHER ANGLES.

NOTE:
FOR SECTIONS B-B, C-C, D-D, F-F, G-G, H-H, & I-I, SEE SHEET 4.

Mark	Description	By	Chk'd.	Recm'd.	Date
REVISIONS					

PENNDOT DRAWING # 2017-332 (REV.1)

COMMONWEALTH OF PENNSYLVANIA
DEPARTMENT OF TRANSPORTATION

SUPERIOR TRANSPARENT SOUND BARRIER SYSTEM

TYPICAL BAY DETAILS FOR SYSTEM #3

9/19/2019

COMMONWEALTH OF PENNSYLVANIA REGISTERED PROFESSIONAL KRISTINA JO MATTLIN ENGINEER No. PE-075435 3/21/2019

JMT

SUPERIOR TRANSPARENT NOISE BARRIERS, LLC
220 GOLFVIEW ROAD
ARDMORE, PA 19003

SHEET 3 OF 6

FILE: Q:\2017\170283_001_Superior_Transparent\CADD\Structures\Option 2\Details02.dgn
DATE: 3/21/2019

DES: GCF | DWG: ALC | CKD: KJM

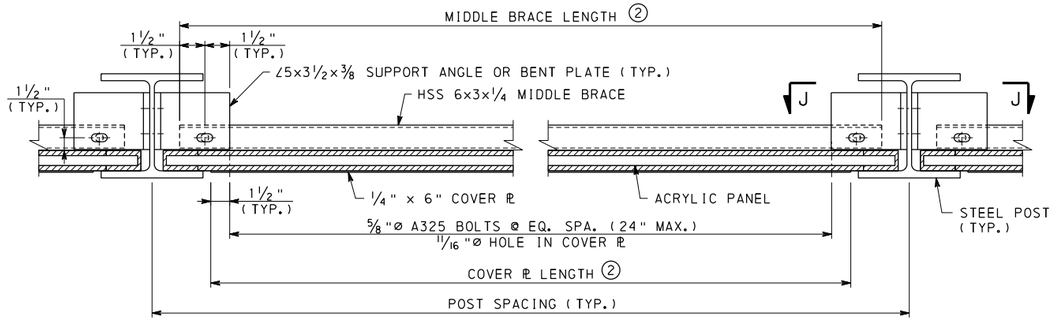

SECTION I-I

N. T. S.

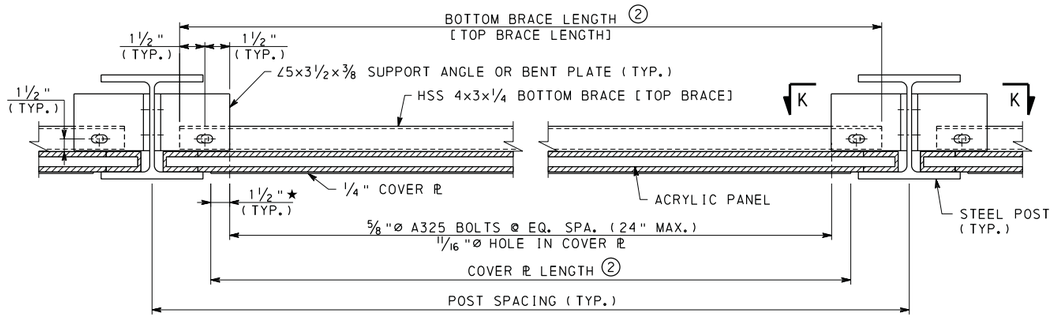

★ TO EDGE OF COVER PLATE NOTCH FOR BOTTOM BRACE

SECTION B-B & F-F

SECTION B-B SHOWN, SECTION F-F SIMILAR AND IN [ ] WHERE DIFFERENT
N. T. S.

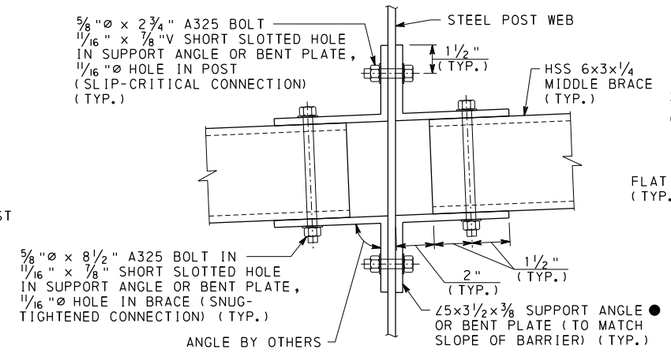

SECTION J-J

N. T. S.

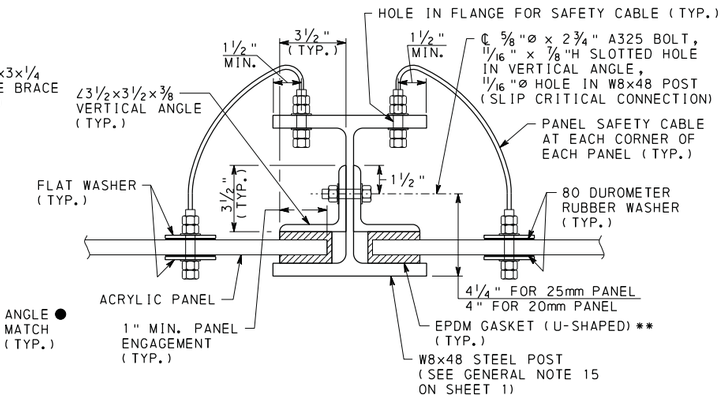

SECTION C-C

** ASSUMED ¼" THICK GASKET

N. T. S.

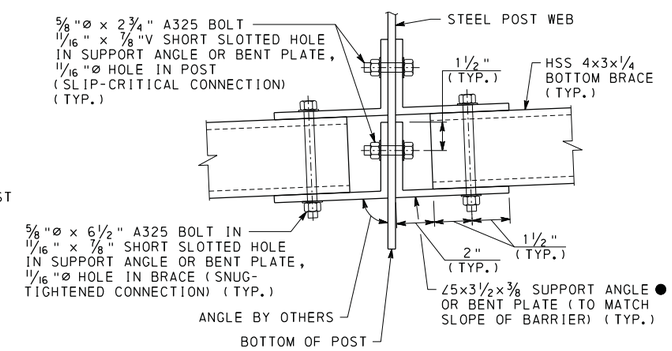

SECTION K-K AT BOTTOM BRACE

N. T. S.

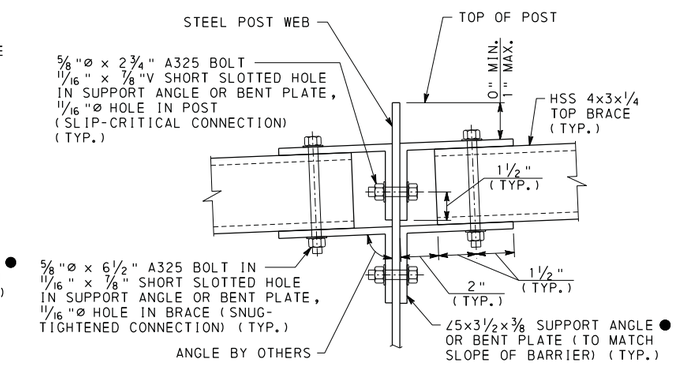

SECTION K-K AT TOP BRACE

N. T. S.

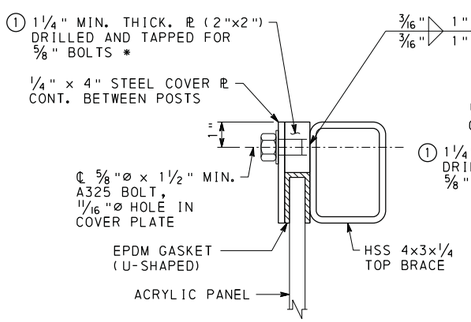

SECTION G-G

(POST & VERTICAL ANGLE NOT SHOWN FOR CLARITY)
N. T. S.

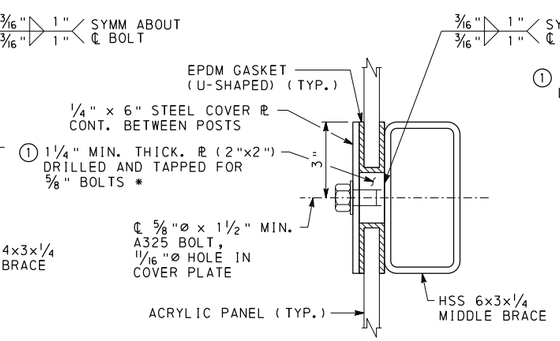

SECTION H-H

(POST & VERTICAL ANGLE NOT SHOWN FOR CLARITY)
N. T. S.

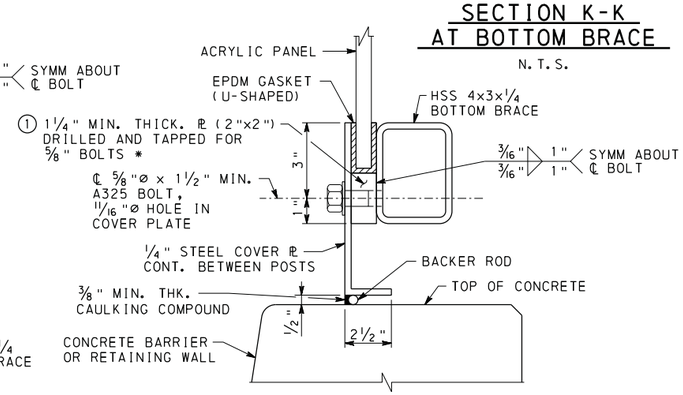

SECTION D-D

(POST & VERTICAL ANGLE NOT SHOWN FOR CLARITY)
N. T. S.

LEGEND:

① USE CLOSED CELL NEOPRENE SPONGE AND CAULKING COMPOUND, CONTINUOUS BETWEEN 1¼"x2"x2" PLATES ON BRACES. GLUE SPONGE TO BRACE AND COVER PLATE USING AN APPROVED ADHESIVE.

② SEE SHEET 2 FOR SYSTEMS #1 & #2
SEE SHEET 3 FOR SYSTEM #3

* PLATE THICKNESS = 2 x EPDM GASKET LEG THICKNESS + PANEL THICKNESS (1¼" MIN., ASSUMING ¼" THICK GASKET, 1½" BOLT LENGTH, AND ¾" MIN. BOLT THREAD ENGAGEMENT)

● USE SUPPORT ANGLE FOR 90° ANGLE. USE BENT PLATE FOR ALL OTHER ANGLES.

9/19/2019

Mark	Description	By	Chk'd.	Recm'd.	Date
REVISIONS					

PENNDOT DRAWING # 2017-332 (REV.1)

COMMONWEALTH OF PENNSYLVANIA
DEPARTMENT OF TRANSPORTATION

SUPERIOR TRANSPARENT SOUND BARRIER SYSTEM

TYPICAL BAY DETAILS FOR SYSTEMS #1, #2, & #3

COMMONWEALTH OF PENNSYLVANIA REGISTERED PROFESSIONAL KRISTINA JO MATTLIN ENGINEER No. PE-075435 3/21/2019

JMT

SUPERIOR TRANSPARENT NOISE BARRIERS, LLC
220 GOLFVIEW ROAD
ARDMORE, PA 19003

SHEET 4 OF 6

FILE: Q:\2017\170283_001_Superior_Transparent\CADD\Structures\Option 2\Details03.dgn
DATE: 3/21/2019

DES: GCF | DWG: ALC | CKD: KJM

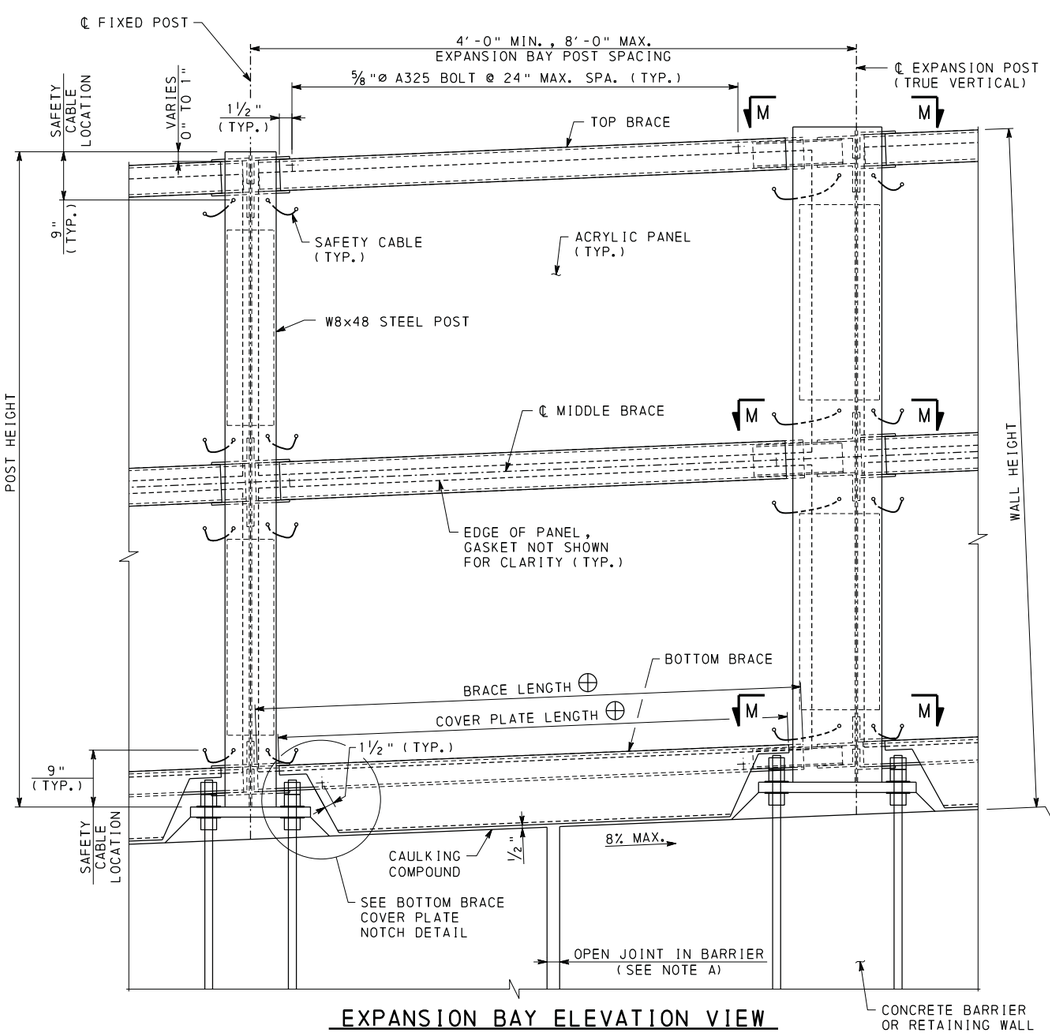

EXPANSION BAY ELEVATION VIEW

SYSTEM #3 SHOWN
SYSTEMS #1 & #2 SIMILAR WITHOUT MIDDLE BRACE
N.T.S.

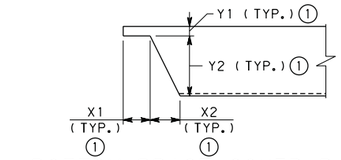

BOTTOM BRACE COVER PLATE NOTCH DETAIL

N.T.S.

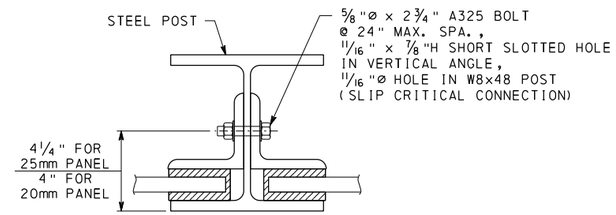

FIXED POST DETAIL

N.T.S.

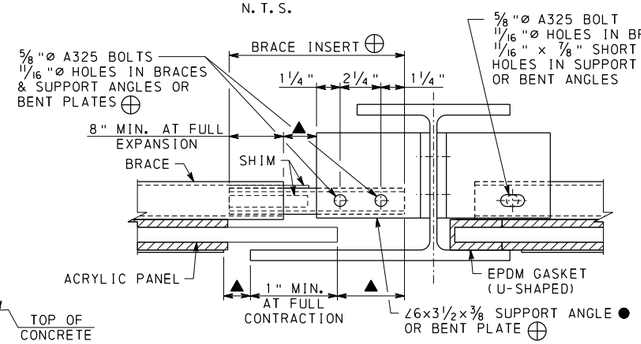

SECTION M-M

N.T.S.

▲TOTAL MOVEMENT + 1/2" MIN.

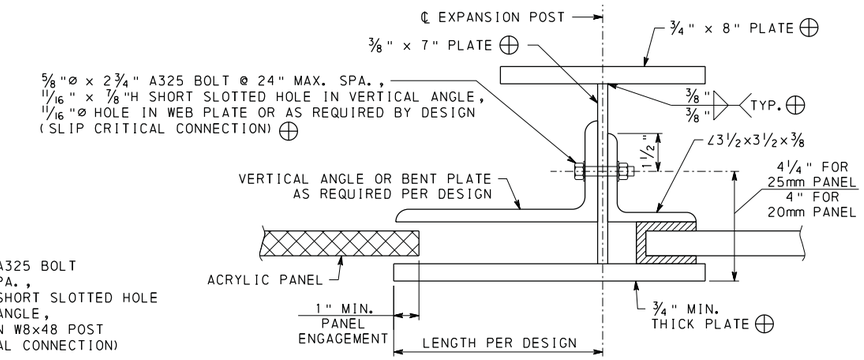

EXPANSION POST DETAIL - CONCEPTUAL OPTION A

N.T.S.

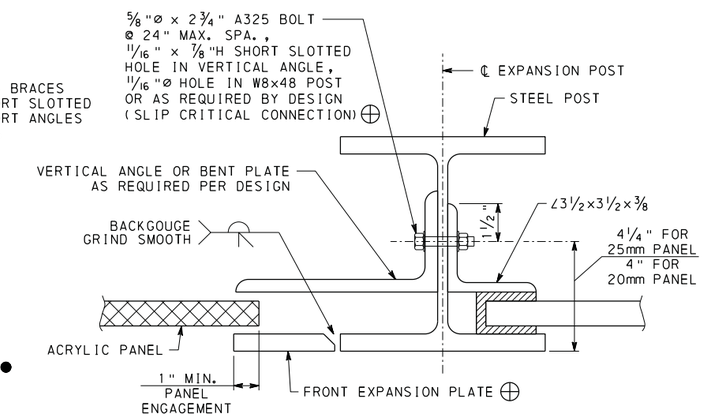

EXPANSION POST DETAIL - CONCEPTUAL OPTION B

N.T.S.

NOTE A:

- JOINT OPENING AS REQUIRED FOR BRIDGE EXPANSION AND CONTRACTION AT 68°F
- JOINT OPENING FOR SHOULDER OR PAVEMENT RELIEF JOINT = 1'-0" (REFER TO RC-20M AND RC-24M AND RC-25M)
- BARRIER SLIDING PLATE (BY OTHERS) NOT SHOWN.

LEGEND:

1. X1, X2, Y1, Y2 = COVER PLATE NOTCH DIMENSIONS TO BE DESIGNED BY OTHERS BASED ON BASE PLATE, GROUT PAD AND SLOPE OF BARRIER/WALL TO CLEAR ANCHOR BOLT.
   X1 = 2" MIN., 4 1/4" MAX. X2 = 3" MIN., 7" MAX.
   Y1 = 1" MIN., 3 1/2" MAX. Y2 = 5" MIN., 10 1/2" MAX.
   NOTCH LIMITS NOT APPLICABLE AT EXPANSION SIDE OF EXPANSION POST.

⊕ MIN. SIZE SHOWN, PROVIDE SIZE/DIMENSIONS REQUIRED BY DESIGN FOR JOINT MOVEMENT

● USE SUPPORT ANGLE FOR 90° ANGLE. USE BENT PLATE FOR ALL OTHER ANGLES.

NOTE: FOR DETAILS NOT SHOWN, SEE SHEETS 2-4.

EXPANSION POST BASE PLATE AND CONNECTION TO CONCRETE BARRIER/RETAINING WALL TO BE DESIGNED BY OTHERS

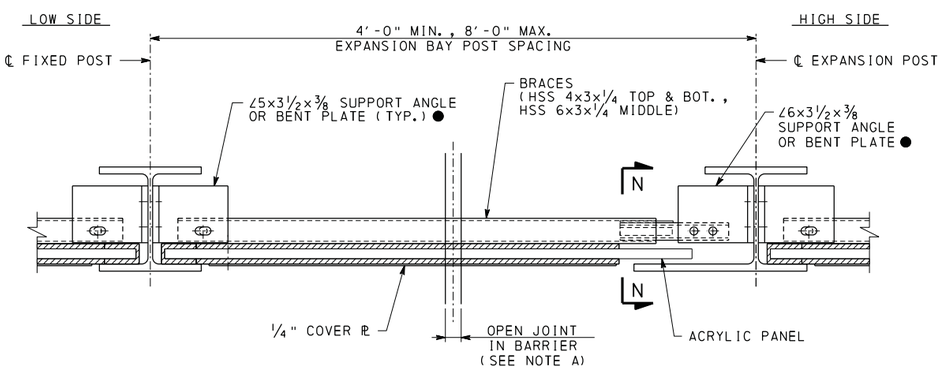

EXPANSION BAY PLAN VIEW

N.T.S.

NOTE:
FOR SECTION N-N,
SEE SHEET 6

9/19/2019

Mark	Description	By	Chk'd.	Recm'd.	Date
REVISIONS					

PENNDOT DRAWING # 2017-332 (REV.1)

COMMONWEALTH OF PENNSYLVANIA
DEPARTMENT OF TRANSPORTATION

SUPERIOR TRANSPARENT
SOUND BARRIER SYSTEM

EXPANSION BAY DETAILS - 1
FOR SYSTEMS #1, #2, & #3

SUPERIOR TRANSPARENT NOISE BARRIERS, LLC
220 GOLFVIEW ROAD
ARDMORE, PA 19003

SHEET 5 OF 6

DES: GCF | DWG: ALC | CKD: KJM

FILE: Q:\2017\170283_001_Superior_Transparent\CADD\Structures\Option 2\Details06.dgn
DATE: 3/21/2019

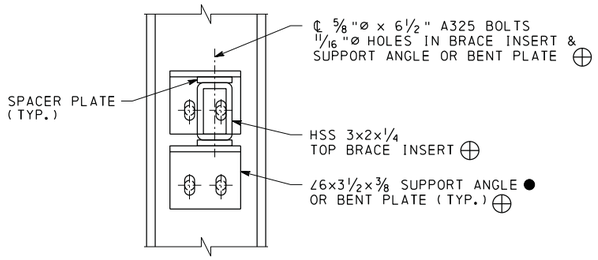

SECTION N-N
TOP BRACE INSERT

N.T.S.

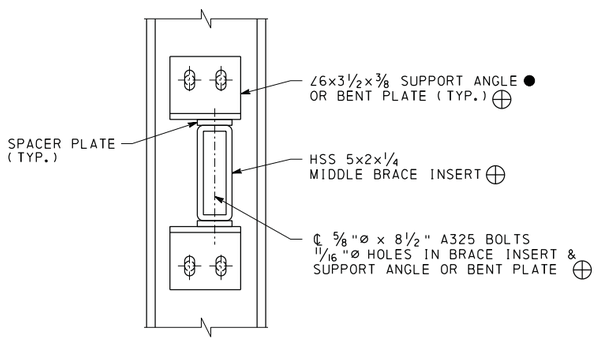

SECTION N-N
MIDDLE BRACE INSERT

N.T.S.

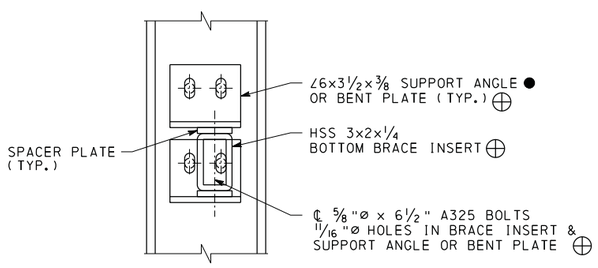

SECTION N-N
BOTTOM BRACE INSERT

N.T.S.

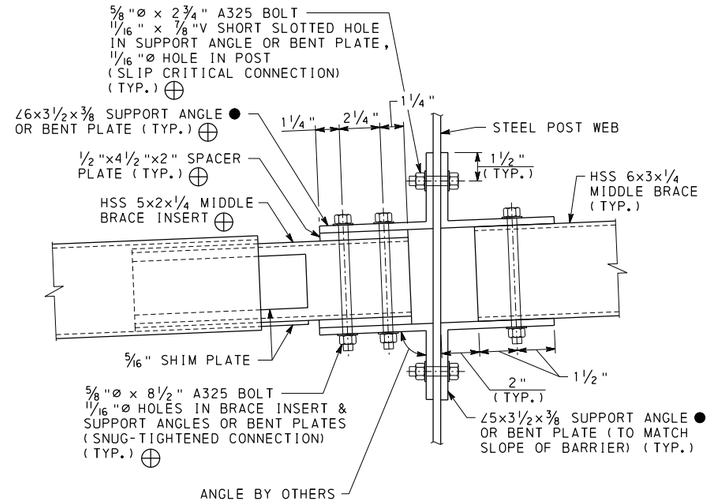

CONNECTION AT POST
MIDDLE BRACE INSERT

N.T.S.

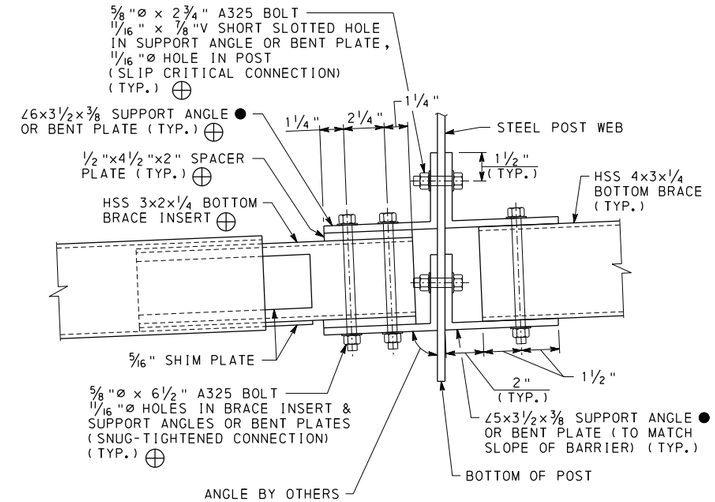

CONNECTION AT POST
BOTTOM BRACE INSERT

N.T.S.

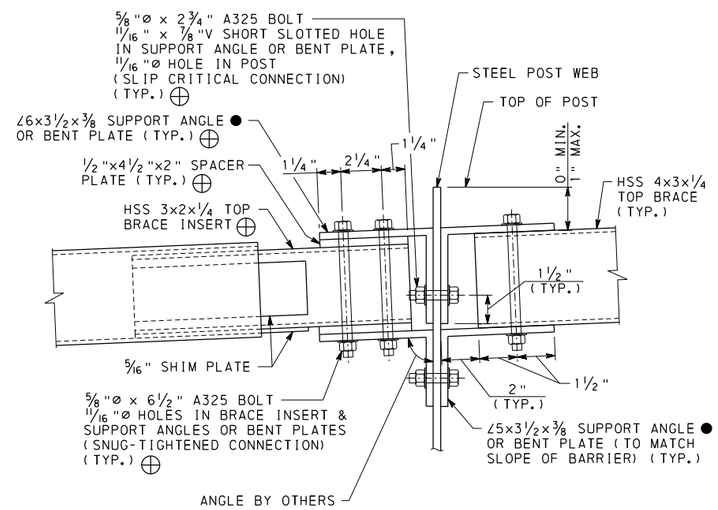

CONNECTION AT POST
TOP BRACE INSERT

N.T.S.

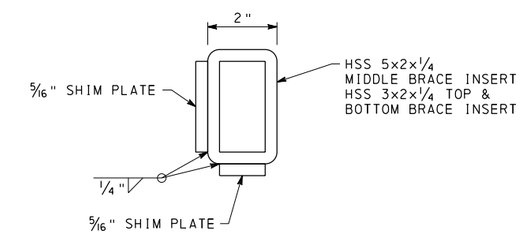

SHIM DETAIL

N.T.S.

LEGEND:

⊕ MIN. SIZE SHOWN, PROVIDE SIZE/DIMENSIONS REQUIRED BY DESIGN

● USE SUPPORT ANGLE FOR 90° ANGLE.
USE BENT PLATE FOR ALL OTHER ANGLES.

NOTE: FOR DETAILS NOT SHOWN, SEE SHEETS 2-4

Mark	Description	By	Chk'd.	Recm'd.	Date
REVISIONS					

PENNDOT DRAWING # 2017-332 (REV.1)

9/19/2019

COMMONWEALTH OF PENNSYLVANIA
DEPARTMENT OF TRANSPORTATION

SUPERIOR TRANSPARENT
SOUND BARRIER SYSTEM

EXPANSION BAY DETAILS - 2
FOR SYSTEMS #1, #2, & #3

SUPERIOR TRANSPARENT
NOISE BARRIERS, LLC
220 GOLFVIEW ROAD
ARDMORE, PA 19003

SHEET 6 OF 6

FILE: Q:\2017\170283_001_Superior_Transparent\CADD\Structures\Option 2\Details07.dgn
DATE: 3/21/2019

DES: GCF | DWG: ALC | CKD: KJM

Product:

Item 8622-xxxx – Redi-Rock Gravity Retaining Wall System
Redi-Rock International
PennDOT Drawing # 2016-030

Approval Date:	**Initiated By SOL:**
May 15, 2018	483-18-02

Application/Use:

Redi-Rock Gravity Retaining Wall System developed by Redi-Rock International, MI has been approved for use as an "As-designed" or "Alternate" retaining wall. The use as an "As-designed" or "Alternate" or retaining wall is at the discretion of the District Executive.

Redi-Rock Gravity Retaining Wall System's usage has the following restrictions:

- Maximum height: 9 ft. with traffic liveload.
- Maximum height: 6 ft. with 2:1 infinite backfill slope.
- Not to be used in applications where ground water is located within the retained zone or long bodies of water.

This wall system meets both AASHTO and Design Manual, Part 4 design criteria.

Specifications:

Design/Material/Construction Specifications for this retaining wall system are specified on PennDOT Drawing # 2016-030, dated May 15, 2018, of Redi-Rock Gravity Retaining Wall System details for your use.

Comments:

On those projects permitting the use of this system as an alternate, a special provision should be included in the proposal to indicate that the "Redi-Rock Gravity Retaining Wall System" as an alternate is allowed.
The contractor will be required to revise the pertinent contract drawings as per DM-4, PP 1.10 to show the usage of "Redi-Rock Gravity Retaining Wall System" and will also be required to reimburse the Department a fee of $1,000 per design for the review and approval of the revision. This should be specified in the contract's Special Provisions.

PART 1 – GENERAL

1.01 SUMMARY

A. THIS SECTION INCLUDES FURNISHING ALL MATERIALS AND LABOR REQUIRED FOR THE DESIGN AND CONSTRUCTION OF A PRECAST CONCRETE MODULAR BLOCK (PMB) RETAINING WALL WITH OR WITHOUT GEOSYNTHETIC REINFORCEMENT. PRECAST MODULAR BLOCK RETAINING WALL BLOCKS UNDER THIS SECTION SHALL BE CAST UTILIZING A WET–CAST CONCRETE MIX AND EXHIBIT A FINAL HANDLING WEIGHT IN EXCESS OF 1,000 POUNDS (450 KILOGRAMS) PER UNIT.

B. SCOPE OF WORK: THE WORK SHALL CONSIST OF FURNISHING MATERIALS, LABOR, EQUIPMENT, AND SUPERVISION FOR THE CONSTRUCTION OF A PRECAST MODULAR BLOCK RETAINING WALL STRUCTURE IN ACCORDANCE WITH THE REQUIREMENTS OF THIS SECTION AND IN ACCEPTABLE CONFORMITY WITH THE LINES, GRADES, DESIGN, AND DIMENSIONS SHOWN IN THE PROJECT SITE PLANS.

1.02 SUBMITTALS AND DESIGN

A. RETAINING WALL DESIGN CALCULATIONS AND DRAWINGS. FURNISH SIX (6) SETS OF CONSTRUCTION SHOP DRAWINGS AND SIX (6) SETS OF CALCULATIONS TO THE DEPARTMENT FOR REVIEW AND APPROVAL. THE SUBMITTAL SHALL INCLUDE THE FOLLOWING:
   1. SIGNED, SEALED, AND DATED DRAWINGS AND ENGINEERING CALCULATIONS PREPARED IN ACCORDANCE WITH THE SPECIAL PROVISIONS.
   2. QUALIFICATIONS STATEMENT OF EXPERIENCE OF THE DESIGN ENGINEER.
   3. RETAINING WALL DESIGN. THE RETAINING WALL DESIGN IS TO BE BASED ON LOAD AND RESISTANCE FACTOR DESIGN (LRFD) METHODOLOGY. THE RETAINING WALL ENGINEER SHALL DESIGN THE RETAINING WALL IN ACCORDANCE WITH THE CURRENT EDITIONS OF THE DEPARTMENTS DESIGN MANUAL PART 4 (DM–4) AND AASHTO LRFD BRIDGE DESIGN SPECIFICATIONS (AASHTO). IN THE EVENT THAT A CLEAR ORDER OF PREDOMINANCE CANNOT BE ESTABLISHED OR A DIFFERENCE IN THE INTERPRETATION OF THE DESIGN CANNOT BE RESOLVED, THE CHIEF BRIDGE ENGINEER SHALL BE THE ARBITER.
   4. ALLOWABLE BEARING PRESSURE REQUIREMENTS FOR EACH RETAINING WALL SHALL BE CLEARLY SHOWN ON THE CONSTRUCTION DRAWINGS. A REDUCTION FACTOR OF 0.45 SHALL BE USED WHEN DETERMINING THE BEARING RESISTANCE.
   5. GLOBAL STABILITY. OVERALL (GLOBAL) STABILITY SHALL BE EVALUATED IN ACCORDANCE WITH THE DM–4 AND AASHTO DESIGN. THE MINIMUM FACTORS OF SAFETY SHALL BE AS FOLLOWS:
      a. STATIC (BISHOP) 1.5
      b. PSEUDOSTATIC (SEISMIC) 1.1
      c. RAPID DRAWDOWN (IF APPLICABLE) 1.3
   6. SEISMIC STABILITY. SEISMIC LOADING SHALL BE EVALUATED IN ACCORDANCE WITH DM–4 AND AASHTO.
   7. ALLOWABLE SETTLEMENT 1.0 INCH, DIFFERENTIAL SETTLEMENT AND ANGULAR DISTORTION IN ACCORDANCE WITH SECTION 11 OF DM–4 AND AASHTO.
   8. THE RETAINING WALL ENGINEER SHALL EXPLAIN ANY MEASURES REQUIRED FOR COORDINATION OF INSTALLATION OF UTILITIES OR OTHER OBSTRUCTIONS IN THE REINFORCED OR RETAINED FILL ZONES OF THE RETAINING WALL.
   9. REDI–ROCK RETAINING WALL SYSTEMS IS PROHIBITED ALONG STREAMS OR RIVERS.

B. INSTALLER QUALIFICATIONS AT LEAST 14 DAYS PRIOR TO CONSTRUCTION, THE CONTRACTOR SHALL SUBMIT THE QUALIFICATIONS OF THE WALL INSTALLER.

C. PRODUCT DATA. AT LEAST 14 DAYS PRIOR TO CONSTRUCTION, THE CONTRACTOR SHALL SUBMIT A MINIMUM OF SIX (6) COPIES OF THE RETAINING WALL PRODUCT SUBMITTAL PACKAGE TO THE DEPARTMENT FOR REVIEW AND APPROVAL. THE SUBMITTAL PACKAGE SHALL INCLUDE TECHNICAL SPECIFICATIONS AND PRODUCT DATA FROM THE MANUFACTURER FOR THE FOLLOWING:
   1. PRECAST MODULAR BLOCK CONCRETE TEST RESULTS AS FOLLOWS:
      a. 28–DAY COMPRESSIVE STRENGTH
      b. AIR CONTENT
      c. SLUMP OR SLUMP FLOW (AS APPLICABLE)
   2. DRAINAGE PIPE
   3. GEOTEXTILE

D. REDI–ROCK IS NOT RESPONSIBLE FOR PROVIDING CALCULATIONS FOR BEARING CAPACITY, SETTLEMENT, GLOBAL STABILITY, OR SCOUR DEPTH. THESE CALCULATIONS ARE THE RESPONSIBILITY OF CONTRACTOR.

E. THE RETAINING WALL INSTALLATION CONTRACTOR SHALL EXPLAIN ALL EXCAVATION NEEDS, SITE ACCESS, AND MATERIAL STAGING AREA REQUIREMENTS TO THE GENERAL CONTRACTOR AND GRADING CONTRACTOR

F. DESIGN CROSS SECTIONS PROVIDED IN THIS PLAN SET WERE BASED ON THE FOLLOWING SOIL PARAMETERS AND ARE FOR EXAMPLE ONLY:
   1. STRUCTURAL SOILS
      a. ϕ = 34°
      b. γ = 120 LB/FT3
      c. C = 0 LB/FT2
   2. FOUNDATION/EMBANKMENT SOILS
      a. ϕ = 30°
      b. γ = 120 LB/FT3
      c. C = 0 LB/FT2

   DETERMINATION OF THE SOIL PARAMETERS TO BE USED FOR THE DESIGN OF THE RETAINING WALL SHALL BE DETERMINED BY THE CONTRACTOR.

G. REDI–ROCK GRAVITY WALL SYSTEM IS NOT TO BE USED IN APPLICATIONS WHERE GROUNDWATER IS LOCATED WITHIN THE RETAINED ZONE OR ALONG BODIES OF WATER.

1.03 REFERENCES

A. PENNSYLVANIA DEPARTMENT OF TRANSPORTATION, DESIGN MANUAL PART 4, 2015.
B. PENNSYLVANIA DEPARTMENT OF TRANSPORTATION, PUBLICATION 408, 2016.
C. AASHTO LRFD BRIDGE DESIGN SPECIFICATIONS, 7th EDITION, 2014.
D. ASTM C39 – STANDARD TEST METHOD FOR COMPRESSIVE STRENGTH OF CYLINDRICAL TEST SPECIMENS.
E. ASTM C136 – STANDARD TEST METHOD FOR SIEVE ANALYSIS OF FINE COARSE AGGREGATE
F. ASTM D4318 – STANDARD TEST METHOD FOR LIQUID LIMIT, PLASTIC LIMIT, AND PLASTICITY INDEX OF SOILS.
G. ASTM D698 – STANDARD TEST METHOD FOR LABORATORY COMPACTION CHARACTERISTICS OF SOIL USING STANDARD EFFORT.
H. ASTM D4632 – STANDARD TEST METHOD FOR GRAB BREAKING LOAD AND ELONGATION OF GEOTEXTILES.
I. ASTM D6916 – STANDARD TEST METHOD FOR DETERMINING THE SHEAR STRENGTH BETWEEN SEGMENTAL CONCRETE UNITS.

PART 2 – MATERIALS

2.01 PRECAST MODULAR BLOCK RETAINING WALL UNITS

A. ALL UNITS FOR THE PROJECT SHALL BE OBTAINED FROM THE SAME MANUFACTURER. THE MANUFACTURER SHALL BE LICENSED AND AUTHORIZED TO PRODUCE THE RETAINING WALL UNITS BY THE PRECAST MODULAR BLOCK SYSTEM PATENT HOLDER/LICENSOR AND SHALL DOCUMENT COMPLIANCE WITH THE PUBLISHED QUALITY CONTROL STANDARDS OF THE PROPRIETARY PRECAST MODULAR BLOCK SYSTEM LICENSOR FOR THE PREVIOUS THREE (3) YEARS.

B. CONCRETE USED IN THE PRODUCTION OF THE PRECAST MODULAR BLOCK UNITS SHALL BE FIRST–PURPOSE, FRESH CONCRETE. IT SHALL NOT CONSIST OF RETURNED, RECONSTITUTED, SURPLUS, OR WASTE CONCRETE. IT SHALL BE AN ORIGINAL PRODUCTION MIX MEETING THE REQUIREMENTS OF ASTM C94 AND EXHIBIT THE FOLLOWING:
   1. MINIMUM 28–DAY COMPRESSIVE STRENGTH OF 5,000 PSI
   2. SHALL BE FREE OF WATER SOLUBLE CHLORIDES ADMIXTURES.
   3. 6% ± 1½% AIR–ENTRAINMENT IN CONFORMANCE ASTM C94.
   4. SLUMP OF 5 INCHES ± 1½ INCHES PER ASTM C143 FOR CONVENTIONAL CONCRETE MIX DESIGNS. ADDITIONAL HRWR CAN BE USED UP TO 8" MAX PER PUB 407, SEC 704.1d4a FOR SLUMP FOR FLOW ABILITY.
   5. SELF–CONSOLIDATING CONCRETE (SCC) DOES NOT MEET PUBLICATION 408, SECTION 714.7a2, BUT IF APPOVED SLUMP FLOW FOR SCC MIX DESIGNS SHALL BE BETWEEN 20 INCHES AND 30 INCHES, WITHIN 2" OF FLOW, AND 7% ± 2% AIR ENTRAINMENT AS TESTED IN ACCORDANCE WITH ASTM C1611.

C. EACH CONCRETE BLOCK SHALL BE CAST IN A SINGLE CONTINUOUS POUR WITHOUT COLD JOINTS. WITH THE EXCEPTION OF HALF–BLOCK UNITS, CORNER UNITS, AND OTHER SPECIAL APPLICATION UNITS, THE PRECAST MODULAR BLOCK UNITS SHALL CONFORM TO THE NOMINAL DIMENSIONS SHOWN ON THE DRAWINGS.

D. INDIVIDUAL BLOCK UNITS SHALL HAVE A NOMINAL HEIGHT OF 18 INCHES.

E. WITH THE EXCEPTION OF HALF–BLOCK UNITS, CORNER UNITS, AND OTHER SPECIAL APPLICATION UNITS, THE PRECAST MODULAR BLOCK UNITS SHALL HAVE TWO (2) CIRCULAR DOME SHEAR KNOBS THAT ARE 10 INCHES MAXIMUM IN DIAMETER AND 4 INCHES MAXIMUM IN HEIGHT. THE SHEAR KNOBS SHALL FULLY INDEX INTO A CONTINUOUS SEMI–CIRCULAR SHEAR CHANNEL IN THE BOTTOM OF THE BLOCK COURSE ABOVE. PEAK INTERLOCK SHEAR BETWEEN ANY TWO (2) VERTICALLY STACKED PRECAST MODULAR BLOCK UNITS MEASURED IN ACCORDANCE WITH ASTM D6916 SHALL EXCEED 6,500 LB/FT AT A MINIMUM NORMAL LOAD OF 500 LB/FT, AS WELL AS AN ULTIMATE PEAK INTERFACE SHEAR CAPACITY IN EXCESS OF 11,000 LB/FT. TEST SPECIMEN BLOCKS TESTED UNDER ASTM D6916 SHALL BE ACTUAL, FULL–SCALE PRODUCTION BLOCKS OF KNOWN COMPRESSIVE STRENGTH. THE INTERFACE SHEAR CAPACITY REPORTED SHALL BE CORRECTED FOR A 5,000 PSI CONCRETE COMPRESSIVE STRENGTH. REGARDLESS OF PRECAST MODULAR BLOCK CONFIGURATION, INTERFACE SHEAR TESTING SHALL BE COMPLETED WITHOUT THE INCLUSION OF UNIT CORE INFILL AGGREGATE.

F. WITHOUT FIELD CUTTING OR SPECIAL MODIFICATION, THE PRECAST MODULAR BLOCK UNITS SHALL BE CAPABLE OF ACHIEVING A MINIMUM RADIUS OF 14 FT – 6 IN.

G. THE PRECAST MODULAR BLOCK UNITS SHALL BE MANUFACTURED WITH INTEGRALLY CAST SHEAR KNOBS THAT ESTABLISH A STANDARD HORIZONTAL SET–BACK FOR SUBSEQUENT BLOCK COURSES. THE PRECAST MODULAR BLOCK SYSTEM SHALL BE AVAILABLE IN THE FOUR (4) STANDARD HORIZONTAL SETBACK FACING BATTER OPTIONS LISTED BELOW:

SETBACK/BLOCK COURSE	HORIZONTAL FACING BATTER MAX.
3/8"	1.2°
1–5/8"	5.2°
9–3/8"	27.5°
16–5/8"	42.7°

THE PRECAST MODULAR BLOCK UNITS SHALL BE FURNISHED WITH THE REQUIRED SHEAR KNOBS THAT PROVIDE THE FACING BATTER REQUIRED IN THE CONSTRUCTION SHOP DRAWINGS.

H. THE PRECAST MODULAR BLOCK UNIT COLOR AND FACE TEXTURE SHALL BE SELECTED BY THE OWNER FROM THE AVAILABLE RANGE OF TEXTURES AVAILABLE FROM THE PRECAST MODULAR BLOCK MANUFACTURER.

2.03 GEOTEXTILE

A. NONWOVEN GEOTEXTILE FABRIC SHALL BE PLACED AS INDICATED ON THE RETAINING WALL CONSTRUCTION SHOP DRAWINGS. ADDITIONALLY, THE NONWOVEN GEOTEXTILE FABRIC SHALL BE PLACED IN THE V–SHAPED JOINT BETWEEN ADJACENT BLOCK UNITS ON THE SAME COURSE. THE NONWOVEN GEOTEXTILE FABRIC SHALL MEET THE REQUIREMENTS CLASS 3 CONSTRUCTION SURVIVABILITY IN ACCORDANCE WITH AASHTO M 288.

2.04 DRAINAGE AGGREGATE AND WALL INFILL

A. DRAINAGE AGGREGATE (AND WALL INFILL FOR RETAINING WALLS DESIGNED AS MODULAR GRAVITY STRUCTURES) SHALL BE A DURABLE CRUSHED STONE CONFORMING TO NO. 57 SIZE PER PUBLICATION 408, SECTION 703.

2.05 STRUCTURAL FILL

A. PLACE STRUCTURAL BACKFILL (N0.57) IN ACCORDANCE WITH RC–12M AND PUBLICATION 408, SECTION 703.

B. THE REINFORCED BACKFILL MATERIAL SHALL BE FREE OF SOD, PEAT, ROOTS, OR OTHER ORGANIC OR DELETERIOUS MATTER INCLUDING, BUT NOT LIMITED TO, ICE, SNOW, OR FROZEN SOILS.

C. REINFORCED BACKFILL SHALL NOT BE COMPRISED OF CRUSHED OR RECYCLED CONCRETE, RECYCLED ASPHALT, BOTTOM ASH, SHALE, OR ANY OTHER MATERIAL THAT MAY DEGRADE, CREEP, OR EXPERIENCE A LOSS IN SHEAR STRENGTH OR A CHANGE IN PH OVER TIME.

2.06 LEVELING PAD

A. THE PRECAST MODULAR BLOCK UNITS SHALL BE PLACED ON A LEVELING PAD CONSTRUCTED FROM CRUSHED STONE OR CONCRETE. THE LEVELING PAD SHALL BE CONSTRUCTED TO THE DIMENSIONS AND LIMITS SHOWN ON THE RETAINING WALL DESIGN DRAWINGS PREPARED BY THE RETAINING WALL DESIGN ENGINEER.

B. CRUSHED STONE USED FOR CONSTRUCTION OF A GRANULAR LEVELING PAD SHALL MEET THE REQUIREMENTS OF THE DRAINAGE AGGREGATE AND WALL INFILL IN SECTION 2.04 OR A PRE APPROVED ALTERNATE MATERIAL.

C. CONCRETE USED FOR CONSTRUCTION OF A CONCRETE LEVELING PAD SHALL SATISFY THE CRITERIA FOR DM–4 CLASS A. THE CONCRETE SHOULD BE CURED A MINIMUM OF 12 HOURS PRIOR TO PLACEMENT OF THE PRECAST MODULAR BLOCK WALL RETAINING UNITS AND EXHIBIT A MINIMUM 28–DAY COMPRESSIVE STRENGTH OF 3,000 PSI.

D. STRUCTURAL BACKFILL SHALL SATISFY SHEAR STRENGTH REQUIREMENTS OF THE DESIGN

2.07 DRAINAGE

A. DRAINAGE PIPE
   1. DRAINAGE COLLECTION PIPE SHALL BE AT LEAST A 4–INCH DIAMETER, 3–HOLE PERFORATED, HDPE PIPE WITH A MINIMUM PIPE STIFFNESS OF 22 PSI PER ASTM D2412.
   2. THE DRAINAGE PIPE SHALL BE MANUFACTURED IN ACCORDANCE WITH ASTM D1248 FOR HDPE PIPE AND FITTINGS.

2.08 DELIVERY, STORAGE AND HANDLING

A. THE RETAINING WALL INSTALLATION CONTRACTOR SHALL INSPECT THE MATERIALS UPON DELIVERY TO ENSURE THAT THE PROPER TYPE, GRADE, AND COLOR OF MATERIALS HAVE BEEN DELIVERED.

B. THE RETAINING WALL INSTALLATION CONTRACTOR SHALL STORE AND HANDLE ALL MATERIALS IN ACCORDANCE WITH THE MANUFACTURER'S RECOMMENDATIONS AS SPECIFIED HEREIN AND IN A MANNER THAT PREVENTS DETERIORATION OR DAMAGE DUE TO MOISTURE, TEMPERATURE CHANGES, CONTAMINANTS, CORROSION, BREAKING, CHIPPING, UV EXPOSURE, OR OTHER CAUSES. DAMAGED MATERIALS SHALL NOT BE INCORPORATED INTO THE WORK.

C. PRECAST MODULAR BLOCKS
   1. PRECAST MODULAR BLOCKS SHALL BE STORED IN AN AREA WITH POSITIVE DRAINAGE AWAY FROM THE BLOCKS. BE CAREFUL TO PROTECT THE BLOCK FROM MUD AND EXCESSIVE CHIPPING AND BREAKAGE. PRECAST MODULAR BLOCKS SHALL NOT BE STACKED MORE THAN THREE (3) UNITS HIGH IN THE STORAGE AREA.

D. DRAINAGE AGGREGATE AND BACKFILL STOCKPILES
   1. DRAINAGE AGGREGATE OR BACKFILL MATERIAL SHALL NOT BE PILED OVER UNSTABLE SLOPES OR AREAS OF THE PROJECT SITE WITH BURIED UTILITIES.
   2. DRAINAGE AGGREGATE AND/OR REINFORCED FILL MATERIAL SHALL NOT BE STAGED WHERE IT MAY BECOME MIXED WITH OR CONTAMINATED BY POOR DRAINING FINE–GRAINED SOILS SUCH AS CLAY OR SILT.

2.09 QUALITY ASSURANCE

A. RETAINING WALL INSTALLATION CONTRACTOR QUALIFICATIONS. IN ORDER TO DEMONSTRATE BASIC COMPETENCE IN THE CONSTRUCTION OF PRECAST MODULAR BLOCK WALLS, THE RETAINING WALL INSTALLATION CONTRACTOR SHALL DOCUMENT COMPLIANCE WITH THE FOLLOWING:
   1. EXPERIENCE:
      a. CONSTRUCTION EXPERIENCE WITH A MINIMUM OF 30,000 SQUARE FEET OF THE PROPOSED PRECAST MODULAR BLOCK RETAINING WALL SYSTEM.
      b. CONSTRUCTION OF AT LEAST TEN (10) PRECAST MODULAR BLOCK (LARGE BLOCK) RETAINING WALL STRUCTURES WITHIN THE PAST THREE (3) YEARS.
      c. CONSTRUCTION OF AT LEAST 50,000 SQUARE FEET OF PRECAST MODULAR BLOCK (LARGE BLOCK) RETAINING WALLS WITHIN THE PAST THREE (3) YEARS.
   2. RETAINING WALL INSTALLATION CONTRACTOR EXPERIENCE DOCUMENTATION FOR EACH QUALIFYING PROJECT SHALL INCLUDE:
      a. PROJECT NAME AND LOCATION
      b. DATE (MONTH AND YEAR) OF CONSTRUCTION COMPLETION
      c. CONTACT INFORMATION OF OWNER OR GENERAL CONTRACTOR
      d. TYPE (TRADE NAME) OF PRECAST MODULAR BLOCK SYSTEM BUILT
      e. MAXIMUM HEIGHT OF THE WALL CONSTRUCTED
      f. FACE AREA OF THE WALL CONSTRUCTED
   3. IN LIEU OF THE REQUIREMENTS SET FORTH IN ITEMS 1 AND 2 ABOVE, THE RETAINING WALL INSTALLATION CONTRACTOR MUST BE A CERTIFIED PRECAST MODULAR BLOCK RETAINING WALL INSTALLATION CONTRACTOR AS DEMONSTRATED BY SATISFACTORY COMPLETION OF A CERTIFIED PRECAST MODULAR BLOCK RETAINING WALL INSTALLATION TRAINING PROGRAM ADMINISTERED BY THE PRECAST MODULAR BLOCK MANUFACTURER.

B. RETAINING WALL DESIGN ENGINEER QUALIFICATIONS AND STATEMENT OF EXPERIENCE. THE RETAINING WALL DESIGN ENGINEER SHALL SUBMIT A WRITTEN STATEMENT AFFIRMING THAT HE OR SHE HAS THE FOLLOWING MINIMUM QUALIFICATIONS AND EXPERIENCE.
   1. THE RETAINING WALL DESIGN ENGINEER SHALL BE LICENSED TO PRACTICE IN THE COMMONWEALTH OF PENNSYLVANIA.
   2. THE RETAINING WALL DESIGN ENGINEER SHALL BE INDEPENDENTLY CAPABLE OF PERFORMING ALL INTERNAL AND EXTERNAL STABILITY ANALYSES, INCLUDING THOSE FOR SEISMIC LOADING, COMPOUND STABILITY, RAPID DRAW–DOWN, AND DEEP–SEATED, GLOBAL MODES OF FAILURE.
   3. THE RETAINING WALL DESIGN ENGINEER SHALL AFFIRM IN WRITING THAT HE OR SHE HAS PERSONALLY SUPERVISED THE DESIGN OF THE RETAINING WALLS FOR THE PROJECT, THAT THE DESIGN CONSIDERS ALL THE REQUIREMENTS LISTED IN PARAGRAPH 1.02, AND THAT HE OR SHE ACCEPTS RESPONSIBILITY AS THE DESIGN ENGINEER OF RECORD FOR THE RETAINING WALLS CONSTRUCTED ON THE PROJECT.
   4. THE RETAINING WALL DESIGN ENGINEER SHALL AFFIRM IN WRITING THAT HE OR SHE HAS PERSONALLY DESIGNED IN EXCESS OF 100,000 FACE SQUARE FEET OF MODULAR BLOCK EARTH RETAINING WALLS WITHIN THE PREVIOUS THREE (3) YEARS.

C. THE DEPARTMENT RESERVES THE RIGHT TO REJECT THE DESIGN SERVICES OF ANY ENGINEER OR ENGINEERING FIRM WHO, IN THE SOLE OPINION OF THE OWNER, DOES NOT POSSESS THE REQUISITE EXPERIENCE OR QUALIFICATIONS.

PART 3 – EXECUTION

3.01 GENERAL

A. ALL WALL SHALL BE PERFORMED IN ACCORDANCE WITH OSHA SAFETY STANDARDS, STATE AND LOCAL BUILDING CODES, AND MANUFACTURER'S REQUIREMENTS.

B. THE GENERAL CONTRACTOR IS RESPONSIBLE FOR THE LOCATION AND PROTECTION OF ALL EXISTING UNDERGROUND UTILITIES. ANY NEW UTILITIES PROPOSED FOR INSTALLATION IN THE VICINITY OF THE RETAINING WALL SHALL BE INSTALLED CONCURRENT WITH RETAINING WALL CONSTRUCTION. THE GENERAL CONTRACTOR SHALL COORDINATE THE WORK OF SUBCONTRACTORS AFFECTED BY THIS REQUIREMENT.

C. NEW UTILITIES INSTALLED BELOW THE RETAINING WALL SHALL BE BACKFILLED AND COMPACTED TO A MINIMUM OF 95% MAXIMUM DRY DENSITY PER ASTM D698.

D. THE GENERAL CONTRACTOR IS RESPONSIBLE TO ENSURE THAT SAFE EXCAVATIONS AND EMBANKMENTS ARE MAINTAINED THROUGHOUT THE COURSE OF THE PROJECT.

E. ALL WORK SHALL BE INSPECTED BY THE OWNER.

3.02 EXAMINATION

A. PRIOR TO CONSTRUCTION, THE CONTRACTOR, RETAINING WALL INSTALLATION CONTRACTOR, AND GEOTECHNICAL ENGINEER SHALL EXAMINE THE AREAS IN WHICH THE RETAINING WALL WILL BE CONSTRUCTED TO EVALUATE COMPLIANCE WITH THE REQUIREMENTS FOR INSTALLATION TOLERANCES, WORKER SAFETY, AND ANY SITE CONDITIONS AFFECTING PERFORMANCE OF THE COMPLETED STRUCTURE. INSTALLATION SHALL PROCEED ONLY AFTER UNSATISFACTORY CONDITIONS HAVE BEEN CORRECTED.

3.03 PREPARATION

A. FILL SOIL.
   1. THE GEOTECHINCAL ENGINEER SHALL VERIFY THAT STRUCTURAL BACKFILL PLACED IN THE REINFORCED SOIL ZONE SATISFIES THE CRITERIA OF THIS SECTION.
   2. THE GEOTECHNICAL ENGINEER SHALL VERIFY THAT ANY FILL SOIL INSTALLED IN THE FOUNDATION AND RETAINED SOIL ZONES OF THE RETAINING WALL SATISFIES THE SPECIFICATION OF THE RETAINING WALL DESIGN ENGINEER AS SHOWN ON THE CONSTRUCTION DRAWINGS.

B. EXCAVATION.
   1. THE CONTRACTOR SHALL EXCAVATE TO THE LINES AND GRADES REQUIRED FOR CONSTRUCTION OF THE PRECAST MODULAR BLOCK RETAINING WALL AS SHOWN ON THE CONSTRUCTION DRAWINGS. THE CONTRACTOR SHALL MINIMIZE OVER–EXCAVATION. EXCAVATION SUPPORT, IF REQUIRED, SHALL BE THE RESPONSIBILITY OF THE CONTRACTOR.
   2. OVER–EXCAVATED SOIL SHALL BE REPLACED WITH COMPACTED FILL IN CONFORMANCE WITH THE SPECIFICATIONS OF THE RETAINING WALL DESIGN ENGINEER.
   3. EMBANKMENT EXCAVATIONS SHALL BE BENCH CUT AS DIRECTED BY THE PROJECT GEOTECHNICAL ENGINEER AND INSPECTED BY THE INSPECTION ENGINEER FOR COMPLIANCE.

C. FOUNDATION PREPARATION.PRIOR TO CONSTRUCTION OF THE PRECAST MODULAR BLOCK RETAINING WALL, THE LEVELING PAD AREA, AND UNDERCUT ZONE (IF APPLICABLE) SHALL BE CLEARED OF ANY DEBRIS. ALL TOPSOIL, BRUSH, FROZEN SOIL, AND ORGANIC MATERIAL SHALL BE REMOVED. ADDITIONAL FOUNDATION SOILS FOUND TO BE UNSATISFACTORY BEYOND THE SPECIFIED UNDERCUT LIMITS SHALL BE UNDERCUT AND REPLACED WITH APPROVED FILL AS DIRECTED BY THE PROJECT GEOTECHNICAL ENGINEER. THE CONTRACTOR SHALL ENSURE THAT THE UNDERCUT LIMITS ARE CONSISTENT WITH THE REQUIREMENTS OF THE PROJECT GEOTECHNICAL ENGINEER AND THAT ALL SOIL FILL MATERIAL IS PROPERLY COMPACTED ACCORDING PROJECT SPECIFICATIONS.

D. LEVELING PAD.
   1. THE LEVELING PAD SHALL BE CONSTRUCTED TO PROVIDE A LEVEL, HARD SURFACE ON WHICH TO PLACE THE FIRST COURSE OF PRECAST MODULAR BLOCK UNITS. THE LEVELING PAD SHALL BE PLACED IN THE DIMENSIONS SHOWN ON THE RETAINING WALL CONSTRUCTION DRAWINGS AND EXTEND TO THE LIMITS INDICATED.
   2. CRUSHED STONE LEVELING PAD. CRUSHED STONE SHALL BE PLACED IN UNIFORM MAXIMUM LIFTS OF 6 INCHES. THE CRUSHED STONE SHALL BE COMPACTED BY A MINIMUM OF THREE (3) PASSES OF A VIBRATORY COMPACTOR CAPABLE OF EXERTING 2,000 LB OF CENTRIFUGAL FORCE AND TO THE SATISFACTION OF THE INSPECTION ENGINEER.
   3. UN–REINFORCED CONCRETE LEVELING PAD. THE CONCRETE SHALL BE PLACED IN THE SAME DIMENSIONS AS THOSE REQUIRED FOR THE CRUSHED STONE LEVELING PAD. THE RETAINING WALL INSTALLATION CONTRACTOR SHALL ERECT PROPER FORMS AS REQUIRED TO ENSURE THE ACCURATE PLACEMENT OF THE CONCRETE LEVELING PAD ACCORDING TO THE RETAINING WALL CONSTRUCTION DRAWINGS.

3.04 PRECAST MODULAR BLOCK WALL SYSTEM INSTALLATION

A. THE PRECAST MODULAR BLOCK STRUCTURE SHALL BE CONSTRUCTED IN ACCORDANCE WITH THE CONSTRUCTION DRAWINGS, THESE SPECIFICATIONS, AND THE RECOMMENDATIONS OF THE RETAINING WALL SYSTEM COMPONENT MANUFACTURERS. WHERE CONFLICTS EXIST BETWEEN THE MANUFACTURER'S RECOMMENDATIONS AND THESE SPECIFICATIONS, THESE SPECIFICATIONS SHALL PREVAIL.

B. DRAINAGE COMPONENTS. PIPE, GEOTEXTILE, AND DRAINAGE AGGREGATE SHALL BE INSTALLED AS SHOWN ON THE CONSTRUCTION SHOP DRAWINGS.

C. PRECAST MODULAR BLOCK INSTALLATION.
   1. THE FIRST COURSE OF BLOCK UNITS SHALL BE PLACED WITH THE FRONT EDGES PERFECTLY ABUTTED TOGETHER ON THE PREPARED LEVELING PAD AT THE LOCATIONS AND ELEVATIONS SHOWN ON THE CONSTRUCTION DRAWINGS. THE RETAINING WALL INSTALLATION CONTRACTOR SHALL TAKE SPECIAL CARE TO ENSURE THAT THE BOTTOM COURSE OF BLOCK UNITS ARE IN FULL CONTACT WITH THE LEVELING PAD, ARE SET LEVEL AND TRUE, AND ARE PROPERLY ALIGNED ACCORDING TO THE LOCATIONS SHOWN ON THE CONSTRUCTION DRAWINGS.
   2. BACKFILL SHALL BE PLACED IN FRONT OF THE BOTTOM COURSE OF BLOCKS PRIOR TO PLACEMENT OF SUBSEQUENT BLOCK COURSES. NONWOVEN GEOTEXTILE FABRIC SHALL BE PLACED IN THE V–SHAPED JOINTS BETWEEN ADJACENT BLOCKS. DRAINAGE AGGREGATE SHALL BE PLACED IN THE V–SHAPED JOINTS BETWEEN ADJACENT BLOCKS TO A MINIMUM DISTANCE OF 12 INCHES BEHIND THE BLOCK UNIT.
   3. DRAINAGE AGGREGATE SHALL BE PLACED IN 9 INCH MAXIMUM LIFTS AND COMPACTED BY A MINIMUM OF THREE (3) PASSES OF A VIBRATORY PLATE COMPACTOR CAPABLE OF EXERTING A MINIMUM OF 2,000 LB OF CENTRIFUGAL FORCE.
   4. UNIT CORE FILL SHALL BE PLACED IN THE PRECAST MODULAR BLOCK UNIT VERTICAL CORE SLOT. THE CORE FILL SHALL COMPLETELY FILL THE SLOT TO THE LEVEL OF THE TOP OF THE BLOCK UNIT. THE TOP OF THE BLOCK UNIT SHALL BE BROOM–CLEANED PRIOR TO PLACEMENT OF SUBSEQUENT BLOCK COURSES. NO ADDITIONAL COURSES OF PRECAST MODULAR BLOCKS MAY BE STACKED BEFORE THE UNIT CORE FILL IS INSTALLED IN THE BLOCKS ON THE COURSE BELOW.
   5. BASE COURSE BLOCKS FOR GRAVITY WALL DESIGNS MAY BE FURNISHED WITHOUT VERTICAL CORE SLOTS. IF SO, DISREGARD ITEM 4 ABOVE FOR THE BASE COURSE BLOCKS IN THIS APPLICATION.
   6. NONWOVEN GEOTEXTILE FABRIC SHALL BE PLACED BETWEEN THE DRAINAGE AGGREGATE AND THE RETAINED SOIL AS REQUIRED ON THE DRAWINGS.
   7. SUBSEQUENT COURSES OF BLOCK UNITS SHALL BE INSTALLED WITH A RUNNING BOND (HALF BLOCK HORIZONTAL COURSE–TO–COURSE OFFSET). WITH THE EXCEPTION OF 90 DEGREE CORNER UNITS; THE SHEAR CHANNEL OF THE UPPER BLOCK SHALL BE FULLY ENGAGED WITH THE SHEAR KNOBS OF THE BLOCK COURSE BELOW. THE UPPER BLOCK COURSE SHALL BE PUSHED FORWARD TO FULLY ENGAGE THE INTERFACE SHEAR KEY BETWEEN THE BLOCKS AND TO ENSURE CONSISTENT FACE BATTER AND WALL ALIGNMENT. DRAINAGE AGGREGATE, UNIT CORE FILL, GEOTEXTILE, AND PROPERLY COMPACTED BACKFILL SHALL BE COMPLETE AND IN–PLACE FOR EACH COURSE OF BLOCK UNITS BEFORE THE NEXT COURSE OF BLOCKS IS STACKED.
   8. THE ELEVATION OF RETAINED SOIL FILL SHALL NOT BE LESS THAN 1 BLOCK COURSE (18 INCH) BELOW THE ELEVATION OF THE REINFORCED BACKFILL THROUGHOUT THE CONSTRUCTION OF THE RETAINING WALL.
   9. IF INCLUDED AS PART OF THE PRECAST MODULAR BLOCK WALL DESIGN, CAP UNITS SHALL BE SECURED WITH AN ADHESIVE IN ACCORDANCE WITH THE PRECAST MODULAR BLOCK MANUFACTURER'S RECOMMENDATION.

E. CONSTRUCTION TOLERANCE. ALLOWABLE CONSTRUCTION TOLERANCE OF THE RETAINING WALL SHALL BE AS FOLLOWS:
   1. DEVIATION FROM THE DESIGN BATTER AND HORIZONTAL ALIGNMENT, WHEN MEASURED ALONG A 10 FOOT STRAIGHT WALL SECTION, SHALL NOT EXCEED 3/4 INCH.
   2. DEVIATION FROM THE OVERALL DESIGN BATTER SHALL NOT EXCEED 1/2 INCH PER 10 FOOT OF WALL HEIGHT.
   3. THE MAXIMUM ALLOWABLE OFFSET (HORIZONTAL BULGE) OF THE FACE IN ANY PRECAST MODULAR BLOCK JOINT SHALL BE 1/2 INCH.
   4. THE BASE OF THE PRECAST MODULAR BLOCK WALL EXCAVATION SHALL BE WITHIN 2 INCHES OF THE STAKED ELEVATIONS, UNLESS OTHERWISE APPROVED BY THE INSPECTION ENGINEER.
   5. DIFFERENTIAL VERTICAL SETTLEMENT OF THE FACE SHALL NOT EXCEED 1 FOOT ALONG ANY 200 FEET OF WALL LENGTH.
   6. THE MAXIMUM ALLOWABLE VERTICAL DISPLACEMENT OF THE FACE IN ANY PRECAST MODULAR BLOCK JOINT SHALL BE 1/2 INCH.
   7. THE WALL FACE SHALL BE PLACED WITHIN 2 INCHES OF THE HORIZONTAL LOCATION STAKED.

3.05 WALL INFILL AND BACKFILL PLACEMENT

A. BACKFILL MATERIAL PLACED IMMEDIATELY BEHIND THE DRAINAGE AGGREGATE SHALL BE COMPACTED IN ACCORDANCE WITH PUBLICATION 408.

B. COMPACTIVE EFFORT WITHIN 3 FEET OF THE BACK OF THE PRECAST MODULAR BLOCKS SHOULD BE ACCOMPLISHED WITH WALK–BEHIND COMPACTORS. COMPACTION IN THIS ZONE SHALL BE WITHIN 95% OF MAXIMUM DRY DENSITY AT ± 2% OPTIMUM MOISTURE CONTENT AS MEASURED IN ACCORDANCE WITH ASTM D698. HEAVY EQUIPMENT SHOULD NOT BE OPERATED WITHIN 4 FEET OF

Face Texture:	Cobble/Limestone	Ledgestone
Block Weight:	1229 lb	1158 lb
Block Volume:	8.57 ft^3	8.07 ft^3
Center of Gravity:	14.9"	14.2"

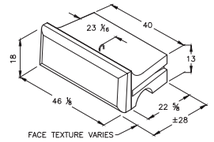

Face Texture:	Cobble/Limestone	Ledgestone
Block Weight:	573 lb	538 lb
Block Volume:	4.01 ft^3	3.76 ft^3
Center of Gravity:	15.3"	14.7"

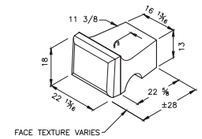

Face Texture:	Cobble/Limestone	Ledgestone
Block Weight:	1748 lb	1677 lb
Block Volume:	12.22 ft^3	11.73 ft^3
Center of Gravity:	21.3"	20.6"

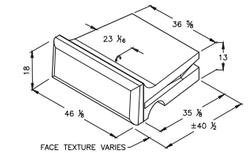

Face Texture:	Cobble/Limestone	Ledgestone
Block Weight:	770 lb	735 lb
Block Volume:	5.38 ft^3	5.14 ft^3
Center of Gravity:	22.4"	21.6"

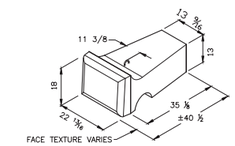

Face Texture:	Cobble/Limestone	Ledgestone
Block Weight:	1613 lb	1542 lb
Block Volume:	11.28 ft^3	10.78 ft^3
Center of Gravity:	13.9"	13.4"

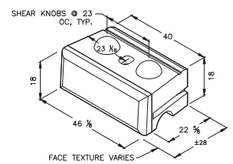

Face Texture:	Cobble/Limestone	Ledgestone
Block Weight:	748 lb	713 lb
Block Volume:	5.23 ft^3	4.98 ft^3
Center of Gravity:	14.3"	13.8"

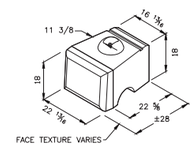

Face Texture:	Cobble/Limestone	Ledgestone
Block Weight:	2309 lb	2237 lb
Block Volume:	16.14 ft^3	15.65 ft^3
Center of Gravity:	20.4"	19.8"

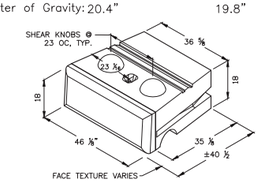

Face Texture:	Cobble/Limestone	Ledgestone
Block Weight:	1022 lb	987 lb
Block Volume:	7.14 ft^3	6.90 ft^3
Center of Gravity:	21.4"	20.8"

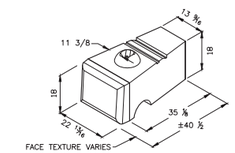

Face Texture:	Cobble/Limestone	Ledgestone
Block Weight:	1744 lb	1672 lb
Block Volume:	12.19 ft^3	11.70 ft^3
Center of Gravity:	14.0"	13.5"

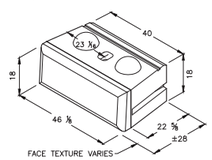

Face Texture:	Cobble/Limestone	Ledgestone
Block Weight:	809 lb	774 lb
Block Volume:	5.66 ft^3	5.41 ft^3
Center of Gravity:	14.3"	13.8"

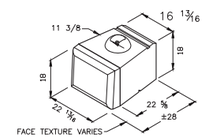

Face Texture:	Cobble/Limestone	Ledgestone
Block Weight:	2439 lb	2368 lb
Block Volume:	17.06 ft^3	16.56 ft^3
Center of Gravity:	20.7"	20.2"

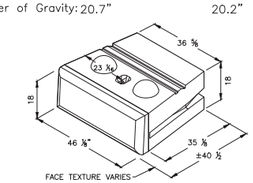

Face Texture:	Cobble/Limestone	Ledgestone
Block Weight:	1083 lb	1048 lb
Block Volume:	7.58 ft^3	7.33 ft^3
Center of Gravity:	21.7"	21.2"

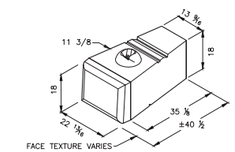

NOTES:

1. Units for dimensions are inches, typical unless noted otherwise.
2. Confirm block production with licensed Redi-Rock manufacturer.
3. Center of Gravity is measured from the back of block.
4. Actual block volumes and weights may vary.
5. Weights are based upon a concrete density of 143 lb/ft^3.
6. Half blocks contain a fork slot on only one side of the block.
7. Interface Shear knobs are typically 10" diameter by 4" tall. Smaller knob diameters are available.
8. *60" are typically used at the bottom of taller walls.

Face Texture:	Cobble/Limestone	Ledgestone
Block Weight:	3418 lb	3346 lb
Block Volume:	23.90 ft^3	23.40 ft^3
Center of Gravity:	31.6"	31.0"

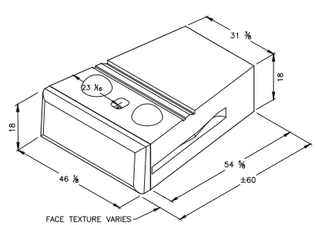

Face Texture:	Cobble/Limestone	Ledgestone
Block Weight:	1397 lb	1364 lb
Block Volume:	9.77 ft^3	9.52 ft^3
Center of Gravity:	34.3"	33.7"

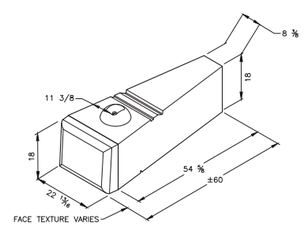

Face Texture:	Cobble/Limestone	Ledgestone
Block Weight:	3287 lb	3216 lb
Block Volume:	23.00 ft^3	22.49 ft^3
Center of Gravity:	31.0"	30.4"

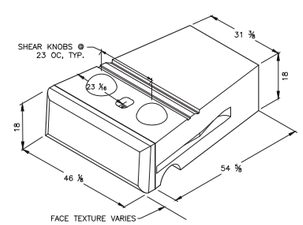

Face Texture:	Cobble/Limestone	Ledgestone
Block Weight:	1335 lb	1300 lb
Block Volume:	9.34 ft^3	9.09 ft^3
Center of Gravity:	33.7"	33.1"

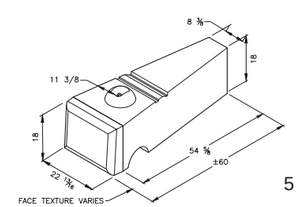

5 / 15 / 2018

Mark	Description	By	Chk'd.	Recm'd.	Date

REVISIONS

PENNDOT DRAWING # 2016-030

COMMONWEALTH OF PENNSYLVANIA

DEPARTMENT OF TRANSPORTATION

REDI-ROCK GRAVITY RETAINING WALL SYSTEM

GRAVITY WALL BLOCK UNITS

SHEET 2 OF 6

GRAVITY WALL SYSTEM BLOCK UNITS

NOT TO SCALE

DES:	DWG:	CKD:

FIVE DEGREE (5°) SETBACK

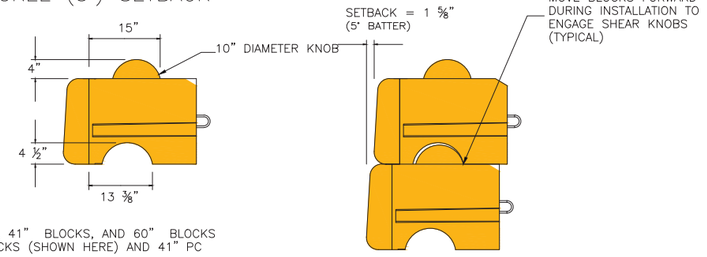

AVAILABLE WITH:
- 28" BLOCKS, 41" BLOCKS, AND 60" BLOCKS
- 28" PC BLOCKS (SHOWN HERE) AND 41" PC BLOCKS

ONE DEGREE (1°) SETBACK

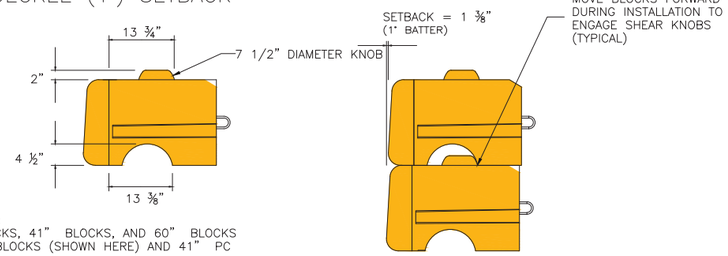

AVAILABLE WITH:
- 28" BLOCKS, 41" BLOCKS, AND 60" BLOCKS
- 28" PC BLOCKS (SHOWN HERE) AND 41" PC BLOCKS

ZERO (0°) SETBACK

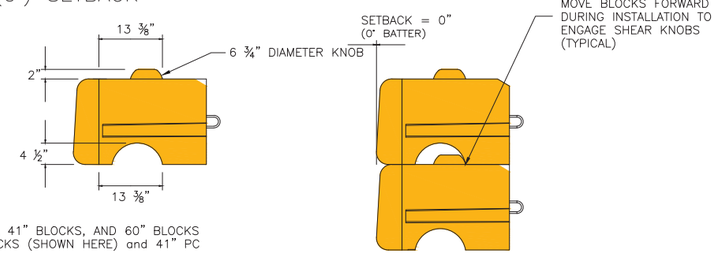

AVAILABLE WITH:
- 28" BLOCKS, 41" BLOCKS, AND 60" BLOCKS
- 28" PC BLOCKS (SHOWN HERE) and 41" PC BLOCKS

BLOCK TO BLOCK SETBACK FOR GRAVITY SYSTEM BLOCK UNITS

NOT TO SCALE

MINIMUM RADIUS AND OFFSET FOR BOTTOM ROW

NUMBER OF COURSES	HEIGHT OF BLOCKS	RADIUS FROM FACE OF BLOCK	OFFSET
1	1'–6"	14'–6"	± 14 ⅜"
2	3'–0"	14'–8"	± 14 ½"
3	4'–6"	14'–10"	± 14 ⅝"
4	6'–0"	15'–0"	± 14 ⅞"
5	7'–6"	15'–2"	± 15"
6	9'–0"	15'–4"	± 15 ⅛"
7	10'–6"	15'–6"	± 15 ⅜"
8	12'–0"	15'–8"	± 15 ½"
9	13'–6"	15'–10"	± 15 ⅝"
10	15'–0"	16'–0"	± 15 ⅞"
11	16'–6"	16'–2"	± 16"
12	18'–0"	16'–4"	± 16 ⅛"
13	19'–6"	16'–6"	± 16 ⅜"
14	21'–0"	16'–8"	± 16 ½"

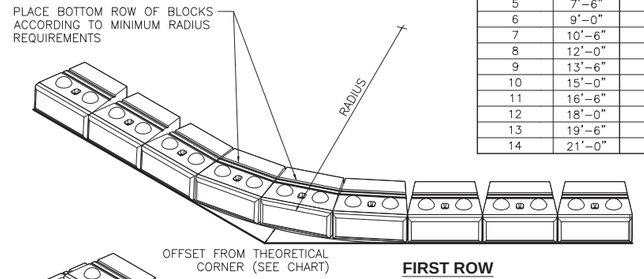

FIRST ROW

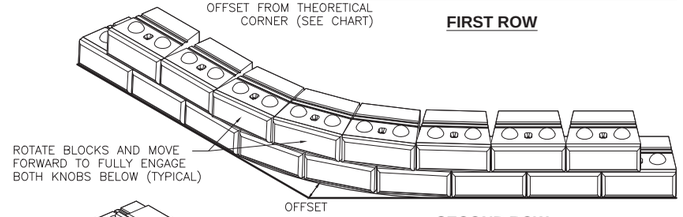

SECOND ROW

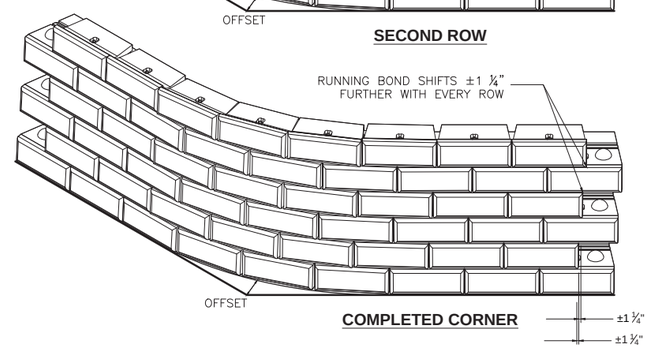

COMPLETED CORNER

45° OUTSIDE CORNER RADIAL SOULTION

NOT TO SCALE

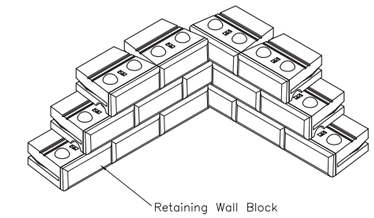

90° INSIDE CORNER

NOT TO SCALE

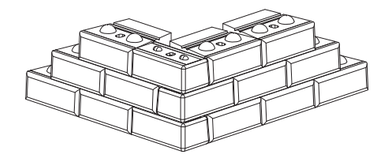

ISOMETRIC VIEW OF CORNER

THE TOP ROW OF BLOCKS IN THIS DIAGRAM HAVE BEEN CUTOUT IN LINE WITH THEIR BOTTOM GROOVES TO SHOW HOW THEY FIT WITH THE KNOBS OF THE BOTTOM ROW OF BLOCKS.

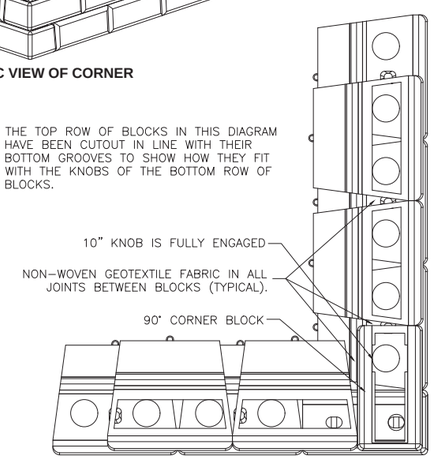

TOP VIEW OF BOTTOM TWO ROWS

90° OUTSIDE CORNER

NOT TO SCALE

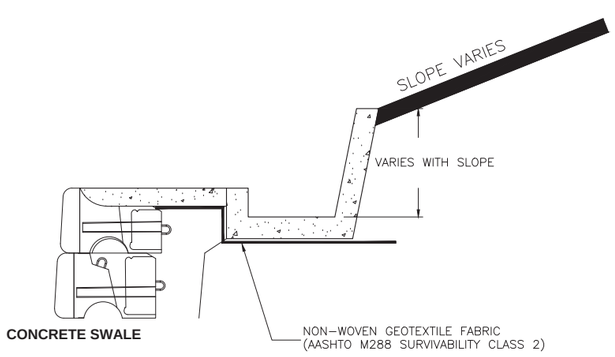

CONCRETE SWALE

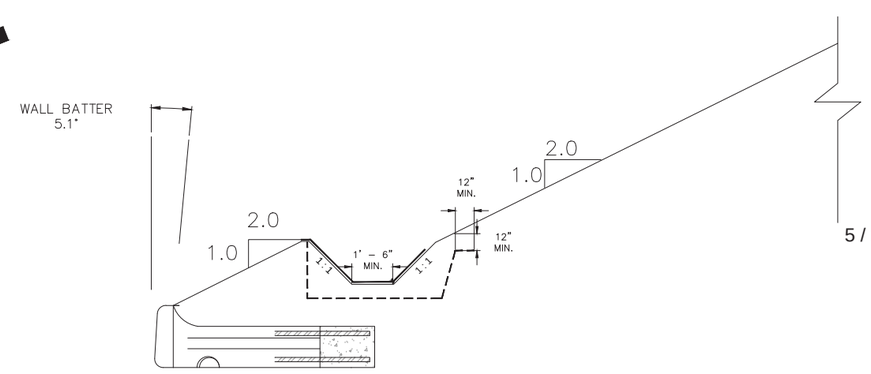

DRAINAGE SWALE OPTIONS

NOT TO SCALE

5 / 15 / 2018

Mark	Description	By	Chk'd.	Recm'd.	Date

REVISIONS

PENNDOT DRAWING # 2016–030

COMMONWEALTH OF PENNSYLVANIA
DEPARTMENT OF TRANSPORTATION

REDI-ROCK GRAVITY RETAINING WALL SYSTEM

SETBACK OPTIONS, CURVE, CORNER, AND SWALE OPTIONS

SHEET 3 OF 6

DES: DWG: CKD:

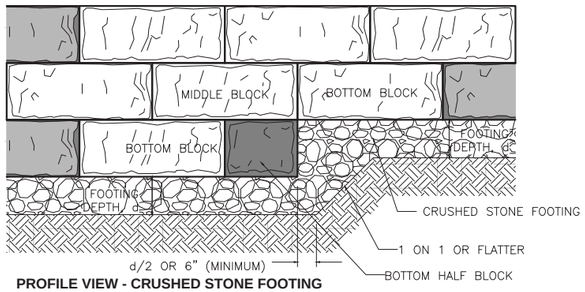

PROFILE VIEW - CRUSHED STONE FOOTING

(NO SCALE)

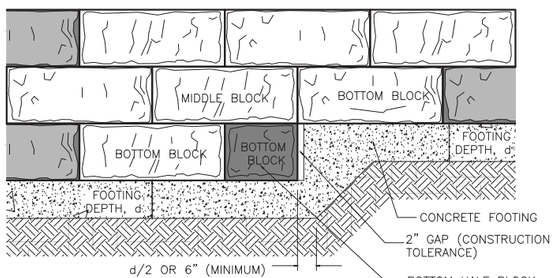

PROFILE VIEW - CONCRETE FOOTING

(NO SCALE)

STEP FOOTING DETAILS

NOT TO SCALE

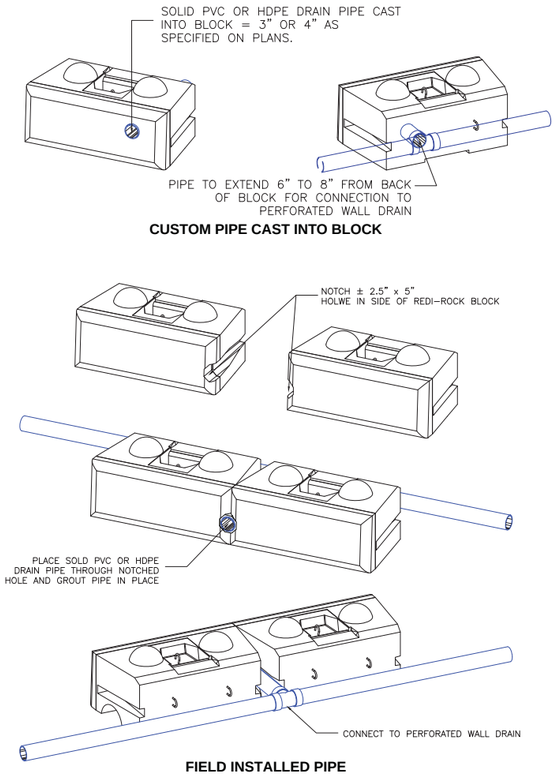

WALL DRAIN WEEP HOLE OPTIONS

NOT TO SCALE

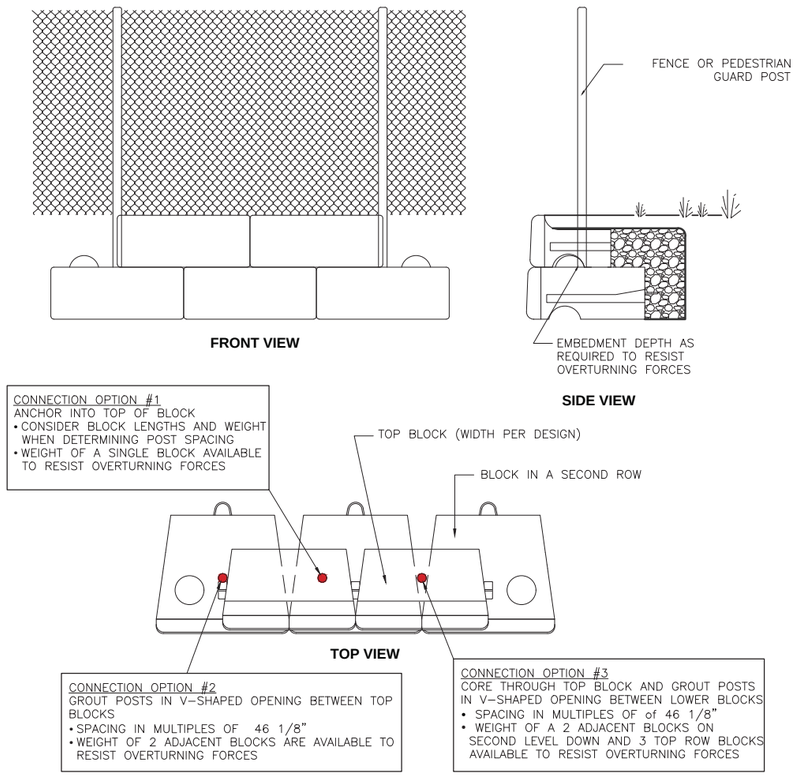

FENCE CONNECTION DETAIL

NOT TO SCALE

Mark	Description	By	Chk'd.	Recm'd.	Date
REVISIONS					

5 / 15 / 2018

PENNDOT DRAWING # 2016-030

COMMONWEALTH OF PENNSYLVANIA
DEPARTMENT OF TRANSPORTATION

REDI-ROCK GRAVITY RETAINING WALL SYSTEM

INSTALLATION DETAILS

SHEET 4 OF 6

DES: DWG: CKD:

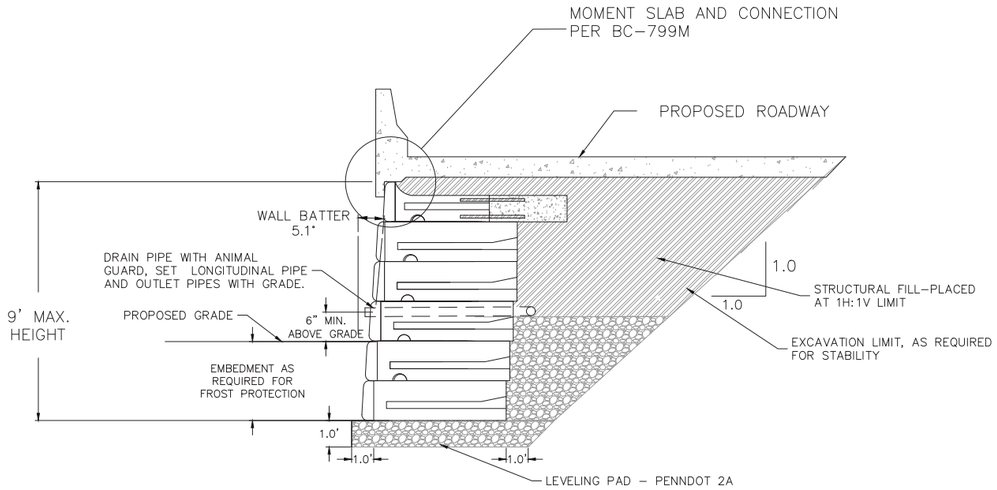

GRAVITY WALL CROSS SECTION - A

NOT TO SCALE

- 9' MAXIMUM TOTAL HEIGHT
- 420 PSF TRAFFIC SURCHARGE
- PLACED AT FROST DEPTH

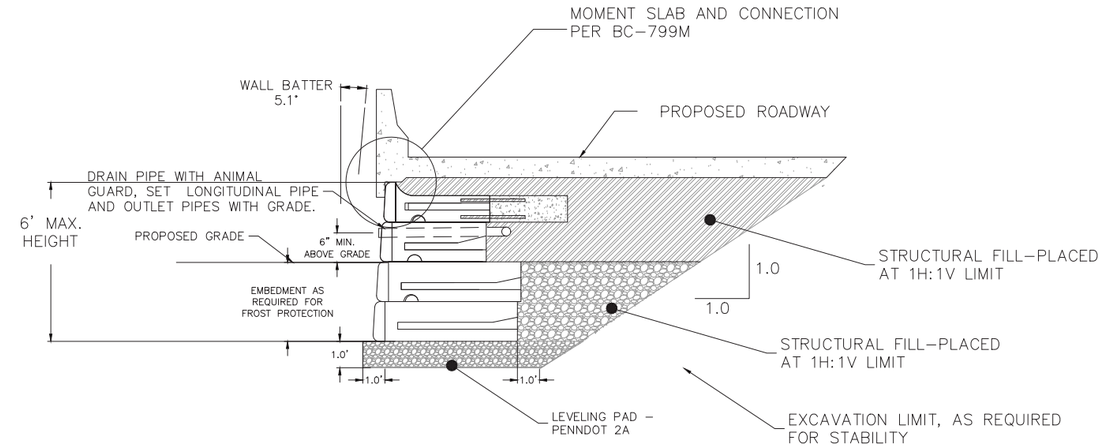

GRAVITY WALL CROSS SECTION - B

NOT TO SCALE

- 6' MAXIMUM TOTAL HEIGHT USING COMBINATION 41IN AND 60IN BLOCKS.
- 420 TRAFFIC LOAD
- PLACED AT FROST DEPTH

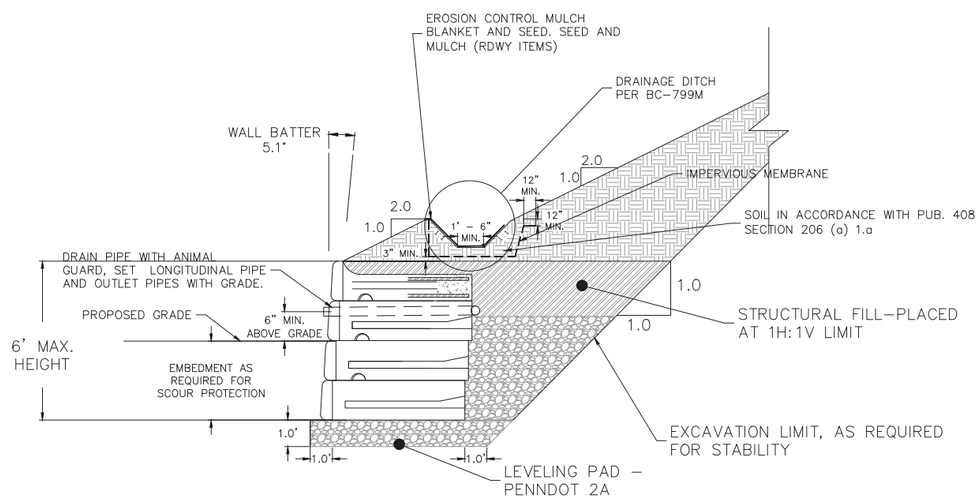

GRAVITY WALL CROSS SECTION - C

NOT TO SCALE

- 6' MAXIMUM TOTAL HEIGHT
- NO LIVE LOAD SURCHARGE
- 2:1 INFINITE BACK SLOPE

Design Soil Parameters

The soil parameters below are an example and were used to develop the section heights presented on sheet 4. Wall sections shall be based on design analyses considering anticipated soils to be used. Accordingly, wall section heights may vary based on these parameters.

γ = 120 pcf	moist unit weight of foundation soil and unclassified embankment
φ = 30°	internal angle of friction for the foundation soil.
c = 0 psf	cohesion of the retained and foundation soil and unclassified embankment
γ = 120 pcf	moist unit weight of structural fill
φ = 34°	internal angle of friction for structural fill.
c = 0 psf	cohesion of the retained soil and leveling pad.

Mark	Description	By	Chk'd.	Recm'd.	Date
REVISIONS					

5 / 15 / 2018

PENNDOT DRAWING # 2016-030

COMMONWEALTH OF PENNSYLVANIA
DEPARTMENT OF TRANSPORTATION

REDI-ROCK GRAVITY RETAINING WALL SYSTEM

GRAVITY WALL CROSS SECTIONS

SHEET 5 OF 6

DES: DWG: CKD:

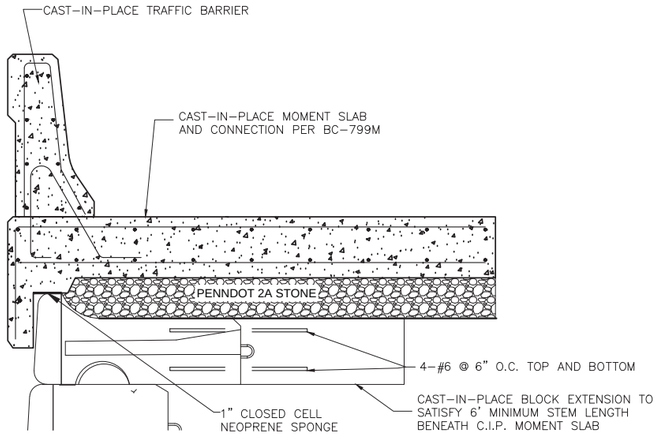

CAST-IN-PLACE MOMENT SLAB WITH CEMENT CONCRETE SHOULDER

NOT TO SCALE

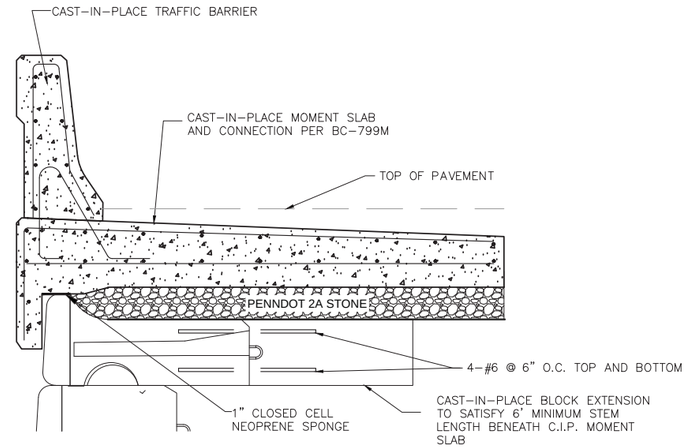

CAST-IN-PLACE MOMENT WITH BITUMINOUS SHOULDER

NOT TO SCALE

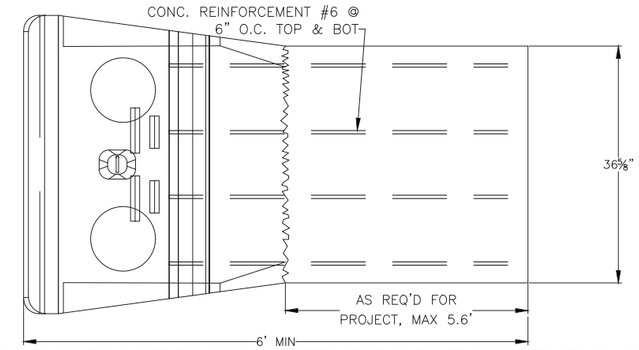

CAST-IN-PLACE BLOCK EXTENSION FOR MOMENT SLAB TOP VIEW

NOT TO SCALE

MINIMUM CONCRETE SPECIFICATION:
5,000 psi, AIR-ENTRAINED, CONCRETE MEETING THE REQUIREMENTS OF ASTM C94

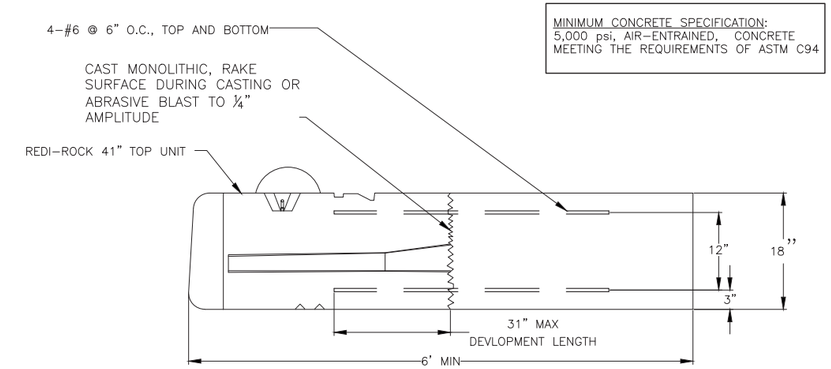

CAST-IN-PLACE BLOCK EXTENSION FOR MOMENT SLAB SIDE VIEW

NOT TO SCALE

The soil parameters below are an example and were used to develop the section heights presented on sheet 4. Wall sections shall be based on design analyses considering anticipated soils to be used. Accordingly, wall section heights may vary based on these parameters.

γ = 120 pcf	moist unit weight of foundation soil and unclassified embankment
φ = 30°	internal angle of friction for the foundation soil.
c = 0 psf	cohesion of the retained and foundation soil and unclassified embankment
γ = 120 pcf	moist unit weight of structural fill
φ = 34°	internal angle of friction for structural fill.
c = 0 psf	cohesion of the retained soil and leveling pad.

Mark	Description	By	Chk'd.	Recm'd.	Date
REVISIONS					

5 / 15 / 2018

PENNDOT DRAWING # 2016-030

COMMONWEALTH OF PENNSYLVANIA
DEPARTMENT OF TRANSPORTATION

REDI-ROCK GRAVITY RETAINING WALL SYSTEM

RETAINING WALL CONSTRUCTION DETAILS

SHEET 6 OF 6

DES: DWG: CKD:

Product:

Item 8622-xxxx – Redi-Rock Positive Connection Retaining Wall System
Redi-Rock International
PennDOT Drawing # 2015-067

Approval Date:	**Initiated By SOL:**
May 15, 2018	483-18-02

Application/Use:

Redi-Rock Positive Connection Retaining Wall System developed by Redi-Rock International, MI has been approved for use as an "As-designed" or "Alternate" retaining wall. The use as an "As-designed" or "Alternate" or retaining wall is at the discretion of the District Executive.

Redi-Rock Positive Connection Retaining Wall System' usage has the following restrictions:

- Maximum height: 30 ft. with traffic liveload at tangent or curve
- Maximum height: 24 ft. with traffic liveload at 90º outside corner
- Maximum height: 25.5 ft. with 2:1 infinite backfill slope

This wall system meets both AASHTO and Design Manual, Part 4 design criteria.

Specifications:

Design/Material/Construction Specifications for this retaining wall system are specified on PennDOT Drawing # 2015-067, dated May 15, 2018, of Redi-Rock Positive Connection Retaining Wall System details for your use.

Comments:

On those projects permitting the use of this system as an alternate, a special provision should be included in the proposal to indicate that the "Redi-Rock Positive Connection Retaining Wall System" as an alternate is allowed.
The contractor will be required to revise the pertinent contract drawings as per DM-4, PP 1.10 to show the usage of "Redi-Rock Positive Connection Retaining Wall System" and will also be required to reimburse the Department a fee of $1,000 per design for the review and approval of the revision. This should be specified in the contract's Special Provisions.

PART 1 – GENERAL

1.01 SUMMARY

A. THIS SECTION INCLUDES FURNISHING ALL MATERIALS AND LABOR REQUIRED FOR THE DESIGN AND CONSTRUCTION OF A PRECAST CONCRETE MODULAR BLOCK (PMB) RETAINING WALL WITH GEOSYNTHETIC REINFORCEMENT. PRECAST MODULAR BLOCK RETAINING WALL BLOCKS UNDER THIS SECTION SHALL BE CAST UTILIZING A WET–CAST CONCRETE MIX AND EXHIBIT A FINAL HANDLING WEIGHT IN EXCESS OF 1,000 POUNDS PER UNIT.

B. SCOPE OF WORK: THE WORK SHALL CONSIST OF FURNISHING MATERIALS, LABOR, EQUIPMENT, AND SUPERVISION FOR THE CONSTRUCTION OF A PRECAST MODULAR BLOCK RETAINING WALL STRUCTURE IN ACCORDANCE WITH THE REQUIREMENTS OF THIS SECTION AND IN ACCEPTABLE CONFORMITY WITH THE LINES, GRADES, DESIGN, AND DIMENSIONS SHOWN IN THE PROJECT SITE PLANS.

1.02 SUBMITTALS AND DESIGN

A. RETAINING WALL DESIGN CALCULATIONS AND DRAWINGS. FURNISH SIX (6) SETS OF CONSTRUCTION SHOP DRAWINGS AND SIX (6) SETS OF CALCULATIONS TO THE DEPARTMENT FOR REVIEW AND APPROVAL. THE SUBMITTAL SHALL INCLUDE THE FOLLOWING:
1. SIGNED, SEALED, AND DATED DRAWINGS AND ENGINEERING CALCULATIONS PREPARED IN ACCORDANCE WITH THE SPECIAL PROVISIONS.
2. DESIGN ENGINEER MUST BE REGISTERED IN THE COMMONWEALTH OF PENNSYLVANIA
3. RETAINING WALL DESIGN. THE RETAINING WALL DESIGN IS TO BE BASED ON LOAD AND RESISTANCE FACTOR DESIGN (LRFD) METHODOLOGY. THE RETAINING WALL ENGINEER SHALL DESIGN THE RETAINING WALL IN ACCORDANCE WITH THE CURRENT EDITIONS OF THE DEPARTMENT'S DESIGN MANUAL PART 4 (DM–4) AND AASHTO LRFD BRIDGE DESIGN SPECIFICATIONS (AASHTO). IN THE EVENT THAT A CLEAR ORDER OF PREDOMINANCE CANNOT BE ESTABLISHED OR A DIFFERENCE IN THE INTERPRETATION OF THE DESIGN CANNOT BE RESOLVED, THE CHIEF BRIDGE ENGINEER SHALL BE THE ARBITER.
4. FACTORED BEARING RESISTANCE FOR EACH RETAINING WALL SHALL BE CLEARLY SHOWN ON THE CONSTRUCTION DRAWINGS.
5. GLOBAL STABILITY. OVERALL (GLOBAL) STABILITY SHALL BE EVALUATED IN ACCORDANCE WITH THE DM–4 AND AASHTO DESIGN. THE MINIMUM FACTORS OF SAFETY SHALL BE AS FOLLOWS:
   a. STATIC (BISHOP) 1.5
   b. PSEUDOSTATIC (SEISMIC) 1.1
   c. RAPID DRAWDOWN (IF APPLICABLE) 1.3
6. SEISMIC STABILITY. SEISMIC LOADING SHALL BE EVALUATED IN ACCORDANCE WITH DM–4 AND AASHTO.
7. ALLOWABLE SETTLEMENT 1.0 INCH, DIFFERENTIAL SETTLEMENT AND ANGULAR DISTORTION IN ACCORDANCE WITH SECTION 11 OF DM–4 AND AASHTO.
8. THE RETAINING WALL ENGINEER SHALL EXPLAIN ANY MEASURES REQUIRED FOR COORDINATION OF INSTALLATION OF UTILITIES OR OTHER OBSTRUCTIONS IN THE REINFORCED OR RETAINED FILL ZONES OF THE RETAINING WALL.

B. INSTALLER QUALIFICATIONS AT LEAST 14 DAYS PRIOR TO CONSTRUCTION, THE CONTRACTOR SHALL SUBMIT THE QUALIFICATIONS OF THE WALL INSTALLER.

C. PRODUCT DATA FROM THE MANUFACTURER FOR THE FOLLOWING:
1. PRECAST MODULAR BLOCK CONCRETE TEST RESULTS AS FOLLOWS:
   a. 28–DAY COMPRESSIVE STRENGTH
   b. AIR CONTENT
   c. SLUMP OR SLUMP FLOW (AS APPLICABLE)
2. DRAINAGE PIPE
3. GEOTEXTILE
4. GEOSYNTHETIC REINFORCEMENT. THE CONTRACTOR SHALL PROVIDE CERTIFIED MANUFACTURER TEST REPORTS FOR THE GEOSYNTHETIC SOIL REINFORCEMENT MATERIAL IN THE MANUFACTURED ROLL WIDTH SPECIFIED. THE TEST REPORTSHALL LIST THE INDIVIDUAL ROLL NUMBERS FOR WHICH THE CERTIFIED MATERIAL PROPERTIES ARE VALID.

D. REDI–ROCK IS NOT RESPONSIBLE FOR PROVIDING CALCULATIONS FOR BEARING CAPACITY, SETTLEMENT, GLOBAL STABILITY, OR SCOUR DEPTH. THESE CALCULATIONS ARE THE RESPONSIBILITY OF CONTRACTOR.

E. THE RETAINING WALL INSTALLATION CONTRACTOR SHALL EXPLAIN ALL EXCAVATION NEEDS, SITE ACCESS, AND MATERIAL STAGING AREA REQUIREMENTS TO THE GENERAL CONTRACTOR AND GRADING CONTRACTOR

F. DESIGN CROSS SECTIONS PROVIDED IN THIS PLAN SET WERE BASED ON THE FOLLOWING SOIL PARAMETERS AND ARE FOR EXAMPLE ONLY:
1.1. MAXIMUM ALLOWABLE HEIGHT WITH LIVE LOAD SURCHARGE
1. REINFORCED SOILS
   a. ϕ = 34°
   b. γ = 90LB/FT3 TO 120 LB/FT3
   c. C = 0 LB/FT2
2. FOUNDATION/UNCLASSIFIED EMBANKMENT SOILS
   a. ϕ = 30°
   b. γ = 120 LB/FT3
   c. C = 0 LB/FT2

1.2. MAXIMUM ALLOWABLE HEIGHT WITH A 2:1 BACKSLOPE
1. REINFORCED SOILS
   a. ϕ = 34°
   b. γ = 120 LB/FT3 MINIMUM
   c. C = 0 LB/FT2
2. FOUNDATION/UNCLASSIFIED EMBANKMENT SOILS
   a. ϕ = 30°
   b. γ = 120 LB/FT3
   c. C = 0 LB/FT2
   • A UNIT WEIGHT OF 90PCF CAN BE UTILIZED WHEN WATER IS NOT ENCOUNTERED

DETERMINATION OF THE SOIL PARAMETERS TO BE USED FOR THE DESIGN OF THE RETAINING WALL SHALL BE DETERMINED BY THE CONTRACTOR.

G. A REDUCTION FACTOR OF 0.8 SHALL BE USED IN DETERMINING THE GEOGRID TENSILE STRENGTH.

1.03 REFERENCES

A. PENNSYLVANIA DEPARTMENT OF TRANSPORTAION, DESIGN MANUAL PART 4, CURRENT EDITION.
B. PENNSYLVANIA DEPARTMENT OF TRANSPORTAION, PUBLICATION 408 CURRENT EDITION.
C. AASHTO LRFD BRIDGE DESIGN SPECIFIATIONS, 7th EDITION, 2014.
D. ASTM C39 – STANDARD TEST METHOD FOR COMPRESSIVE STRENGTH OF CYLINDRICAL TEST SPECIMENS.
E. ASTM C136 – STANDARD TEST METHOD FOR SIEVE ANALYSIS FO FINE COARSE AGGREGATE
F. ASTM D4318 – STANDARD TEST METHOD FOR LIQUID LIMIT, PLASTIC LIMIT, AND PLASTICITY INDEX OF SOILS.
G. ASTM D698 – STANDARD TEST METHOD FOR ABORATORY COMPACTION CHARACTERISTICS OF SOIL USING STANDARD EFFORT.
H. ASTM D4595 – STANDARD TEST METHOD FOR TENSILE PROPERTEIS OF GEOTEXTILES BY THE WIDE–WIDTH STRIP METHOD.
I. ASTM D5262 – STANDARD TEST MEHOD FOR EVALUATING THE UNCONFINED CREEP BEHAVIOR OF GEOSYNTHETICS.
J. ASTM D4632 – STANDARD TEST METHOD FOR GRAB BREAKING LOAD AND ELONGATION OF GEOTEXTILES.
K. ASTM D6638 – STANDARD TEST METHOD FOR DETERMINING CONNECTION STRENGTH BETWEEN GEOSYNTHETIC REINFORCMENT AND SEGMENTAL CONCRETE UNITS (MODULAR CONCRETE BLOCKS).
L. ASTM D6916 – STANDARD TEST METHOD FOR DETERMINING THE SHEAR STRENGTH BETWEEN SEGMENTAL CONCRETE UNITS.

PART 2 – MATERIALS

2.01 PRECAST MODULAR BLOCK RETAINING WALL UNITS

A. PROVIDE MATERIALS AND WORKMANSHIP IN ACCORDANCE WITH PUBLICATION 408, AND SUPPLEMENTS THEREOF, AND/OR SPECIAL PROVISIONS. SECTION 714 OF PUBLICATION 408 APPLIES TO PRECAST CONCRETE PRODUCTS
B. ALL UNITS FOR THE PROJECT SHALL BE OBTAINED FROM THE SAME MANUFACTURER. THE MANUFACTURER SHALL BE LICENSED AND AUTHORIZED TO PRODUCE THE RETAINING WALL UNITS BY THE PRECAST MODULAR BLOCK SYSTEM PATENT HOLDER/LICENSOR AND SHALL DOCUMENT COMPLIANCE WITH THE PUBLISHED QUALITY CONTROL STANDARDS OF THE PROPRIETARY PRECAST MODULAR BLOCK SYSTEM LICENSOR FOR THE PREVIOUS THREE (3) YEARS.
C. CONCRETE USED IN THE PRODUCTION OF THE PRECAST MODULAR BLOCK UNITS SHALL BE FIRST–PURPOSE, FRESH CONCRETE. IT SHALL NOT CONSIST OF RETURNED, RECONSTITUTED, SURPLUS, OR WASTE CONCRETE. IT SHALL BE AN ORIGINAL PRODUCTION MIX MEETING THE REQUIREMENTS OF ASTM C94 AND EXHIBIT THE FOLLOWING:
1. MINIMUM 28–DAY COMPRESSIVE STRENGTH OF 5,000 PSI
2. SHALL BE FREE OF WATER SOLUBLE CHLORIDES ADMIXTURES.
3. AIR ENTRAINMENT:
   a. CONVENTIONAL CONCRETE: 6% ± 1½% IN CONFORMANCE WITH ASTM C94.
   b. SELF CONSOLIDATING CONCRETE: 7% ± 2% IN CONFORMANCE WITH ASTM C94.
4. SLUMP OF 5 INCHES ± 1½ INCHES PER ASTM C143 FOR CONVENTIONAL CONCRETE MIX DESIGNS. ADDITIONAL HRWR CAN BE USED UP TO 8" SLUMP FOR FLOW ABILITY.
5. SELF–CONSOLIDATING CONCRETE (SCC) DOES NOT MEET PUBLICATION 408, SECTION 714.7A2, BUT IF APPROVED SLUMP FLOW FOR SCC MIX DESIGNS SHALL BE BETWEEN 20 INCHES AND 30 INCHES, WITHIN 2" OF FLOW WHEN TESTED IN ACCORDANCE WITH ASTM 1621, AND 7% ± 2% AIR ENTRAINMENT AS TESTED IN ACCORDANCE WITH ASTM C1611 .

D. EACH CONCRETE BLOCK SHALL BE CAST IN A SINGLE CONTINUOUS POUR WITHOUT COLD JOINTS. WITH THE EXCEPTION OF HALF–BLOCK UNITS, CORNER UNITS, AND OTHER SPECIAL APPLICATION UNITS, THE PRECAST MODULAR BLOCK UNITS SHALL CONFORM TO THE NOMINAL DIMENSIONS SHOWN ON THE DRAWINGS.

E. INDIVIDUAL BLOCK UNITS SHALL HAVE A NOMINAL HEIGHT OF 18 INCHES.

F. WITH THE EXCEPTION OF HALF–BLOCK UNITS, CORNER UNITS, AND OTHER SPECIAL APPLICATION UNITS, THE PRECAST MODULAR BLOCK UNITS SHALL HAVE TWO (2) CIRCULAR DOME SHEAR KNOBS THAT ARE 10 INCHES MAXIMUM IN DIAMETER AND 4 INCHES MAXIMUM IN HEIGHT. THE SHEAR KNOBS SHALL FULLY INDEX INTO A CONTINUOUS SEMI–CYLINDRICAL SHEAR CHANNEL IN THE BOTTOM OF THE BLOCK COURSE ABOVE. PEAK INTERLOCK SHEAR BETWEEN ANY TWO (2) VERTICALLY STACKED PRECAST MODULAR BLOCK UNITS MEASURED IN ACCORDANCE WITH ASTM D6916 SHALL EXCEED 6,500 LB/FT AT A MINIMUM NORMAL LOAD OF 500 LB/FT, AS WELL AS AN ULTIMATE PEAK INTERFACE SHEAR CAPACITY IN EXCESS OF 11,000 LB/FT. TEST SPECIMEN BLOCKS TESTED UNDER ASTM D6916 SHALL BE ACTUAL, FULL–SCALE PRODUCTION BLOCKS OF KNOWN COMPRESSIVE STRENGTH. THE INTERFACE SHEAR CAPACITY REPORTED SHALL BE CORRECTED FOR A 5,000 PSI CONCRETE COMPRESSIVE STRENGTH. REGARDLESS OF PRECAST MODULAR BLOCK CONFIGURATION, INTERFACE SHEAR TESTING SHALL BE COMPLETED WITHOUT THE INCLUSION OF UNIT CORE INFILL AGGREGATE.

G. THE 28 INCH AND 41 INCH PRECAST MODULAR BLOCK UNITS SHALL BE CAST WITH A 13 INCH WIDE CONTINUOUS VERTICAL CORE SLOT THAT WILL PERMIT THE INSERTION OF A 12 INCH INCH WIDE STRIP OF GEOGRID REINFORCEMENT TO PASS COMPLETELY THROUGH THE BLOCK. WHEN INSTALLED IN THIS MANNER, THE GEOGRID REINFORCEMENT SHALL FORM A NON–NORMAL LOAD DEPENDENT, POSITIVE CONNECTION BETWEEN THE BLOCK UNIT AND THE REINFORCEMENT STRIP. THE USE OF STEEL FOR THE PURPOSES OF CREATING THE GEOGRID–TO–BLOCK CONNECTION IS NOT ACCEPTABLE.

H. WITHOUT FIELD CUTTING OR SPECIAL MODIFICATION, THE PRECAST MODULAR BLOCK UNITS SHALL BE CAPABLE OF ACHIEVING A MINIMUM RADIUS OF 14 FT – 6 IN.

I. THE PRECAST MODULAR BLOCK UNITS SHALL BE MANUFACTURED WITH INTEGRALLY CAST SHEAR KNOBS THAT ESTABLISH A STANDARD HORIZONTAL SET–BACK FOR SUBSEQUENT BLOCK COURSES. THE PRECAST MODULAR BLOCK SYSTEM SHALL BE AVAILABLE IN THE FOUR (4) STANDARD HORIZONTAL SETBACK FACING BATTER OPTIONS LISTED BELOW:

HORIZONTAL SETBACK/BLOCK COURSE	MAX. FACING BATTER
3/8"	1.2°
1–5/8"	5.2°

THE PRECAST MODULAR BLOCK UNITS SHALL BE FURNISHED WITH THE REQUIRED SHEAR KNOBS THAT PROVIDE THE FACING BATTER REQUIRED IN THE CONSTRUCTION SHOP DRAWINGS.

J. THE PRECAST MODULAR BLOCK UNIT COLOR AND FACE TEXTURE SHALL BE SELECTED BY THE OWNER FROM THE AVAILABLE RANGE OF TEXTURES AVAILABLE FROM THE PRECAST MODULAR BLOCK MANUFACTURER.

2.02 METALS

A. J–BOLTS
1. CONNECTIONS SHALL BE GRADE C1541.
2. CONNECTIONS SHALL HAVE A MINIMUM YIELD STRESS OF 92KSI,
3. CONNECTIONS SHALL HAVE A MINIMUM TENSILE STRESS OF 120KSI.
4. METAL CONNECTIONS SHALL BE EPOXY–COATED OR GALVANIZED.

2.03 GEOGRID REINFORCEMENT

A. GEOGRID REINFORCEMENT SHALL BE A WOVEN OR KNITTED PVC COATED GEOGRID MANUFACTURED FROM HIGH–TENACITY PET POLYESTER FIBER WITH AN AVERAGE MOLECULAR WEIGHT GREATER THAN 25,000 (MN > 25,0000) AND WITH A LOW A CARBOXYL END GROUP NUMBERS (CEG < 25). THE GEOGRID SHALL BE FURNISHED IN PREFABRICATED ROLL WIDTHS OF CERTIFIED TENSILE STRENGTH BY THE MANUFACTURER. THE PREFABRICATED ROLL WIDTH OF THE GEOGRID SHALL BE 12 INCHES ±1/2 INCH. NO CUTTING OF GEOGRID REINFORCEMENT DOWN TO THE 12 INCHES ROLL WIDTH FROM A LARGER COMMERCIAL ROLL WIDTH WILL BE ALLOWED UNDER ANY CIRCUMSTANCES.

B. THE ULTIMATE TENSILE STRENGTH (TULT) OF THE GEOGRID REINFORCEMENT SHALL BE MEASURED IN ACCORDANCE WITH ASTM D6637, Method B.

C. GEOGRID – SOIL FRICTION PROPERTIES.
1. FRICTION FACTOR, F*, SHALL BE EQUAL TO 2/3 TAN φ, WHERE φ IS THE EFFECTIVE ANGLE OF INTERNAL FRICTION OF THE REINFORCED FILL SOIL.
2. LINEAR SCALE CORRECTION FACTOR, α, SHALL EQUAL 0.8.

D. LONG–TERM TENSILE STRENGTH (TAL) OF THE GEOGRID REINFORCEMENT SHALL BE CALCULATED IN ACCORDANCE WITH TABLE 1–8–1 IN APPENDIX I OF THE PENNDOT DM–4 AND AS PROVIDED IN THIS SPECIFICATION.
1. THE CREEP REDUCTION FACTOR (RFCR) SHALL BE DETERMINED IN ACCORDANCE WITH APPENDIX I OF THE PENNDOT DM–4 FOR A MINIMUM 100–YEAR DESIGN LIFE.
2. MINIMUM INSTALLATION DAMAGE REDUCTION FACTOR (RFID) SHALL BE 1.53. THE VALUE OF RFID SHALL BE BASED UPON DOCUMENTED FULL–SCALE TESTS IN A SOIL THAT IS COMPARABLE TO THE MATERIAL PROPOSED FOR USE AS REINFORCED BACKFILL IN ACCORDANCE WITH ASTM D5818 AND ASTM 6637 PER PUB. 408.
3. MINIMUM DURABILITY REDUCTION FACTOR (RFD) SHALL BE 1.3 FOR A SOIL PH RANGE OF 5 TO 9.

E. CONNECTION BETWEEN THE PRECAST MODULAR BLOCK RETAINING WALL UNIT AND THE GEOGRID REINFORCEMENT SHALL BE DETERMINED FROM SHORT–TERM TESTING PER THE REQUIREMENTS OF APPENDIX I SECTION 1.10 OF THE PENNDOT DM–4 FOR A MINIMUM 100–YEAR DESIGN LIFE.

F. THE MINIMUM VALUE OF TAL FOR GEOGRID USED IN DESIGN OF A REINFORCED PRECAST MODULAR BLOCK RETAINING WALL SHALL BE 2,000 LB/FT OR GREATER.

G. THE MINIMUM LENGTH OF GEOGRID REINFORCEMENT SHALL BE AS DETERMINED BY CONTRACTOR'S ENGINEER, BUT SHALL NOT BE LESS THAN 8 FEET

H. CONSTRUCTIBILITY REQUIREMENTS. GEOGRID DESIGN EMBEDMENT LENGTH SHALL BE MEASURED FROM THE BACK OF THE PRECAST MODULAR BLOCK FACING UNIT AND SHALL BE CONSISTENT FOR THE ENTIRE HEIGHT OF A GIVEN RETAINING WALL SECTION.

I. GEOGRID SHALL BE POSITIVELY CONNECTED TO EVERY PRECAST MODULAR BLOCK UNIT. DESIGN COVERAGE RATIO, RC, AS CALCULATED IN ACCORDANCE WITH AASHTO LRFD BRIDGE DESIGN SPECIFICATIONS FIGURE 11.10.6.4.1–2 SHALL NOT EXCEED 0.50.

J. APPROVED FOR USE WITH REDI–ROCK POSITIVE CONNECTION WALL UNITS
1. MIRAGRID XT GEOGRIDS AS MANUFACTURED BY TENCATE GEOSYNTHETICS OF PENDERGRASS, GEORGIA USA AND DISTRIBUTED BY MANUFACTURERS OF THE REDI–ROCK RETAINING WALL SYSTEM.

K. SUBSTITUTIONS. NO SUBSTITUTIONS OF GEOGRID REINFORCEMENT PRODUCTS SHALL BE ALLOWED.

2.04 GEOTEXTILE

A. NONWOVEN GEOTEXTILE FABRIC SHALL BE PLACED AS INDICATED ON THE RETAINING WALL CONSTRUCTION SHOP DRAWINGS. ADDITIONALLY, THE NONWOVEN GEOTEXTILE FABRIC SHALL BE PLACED IN THE V–SHAPED JOINT BETWEEN ADJACENT BLOCK UNITS ON THE SAME COURSE. THE NONWOVEN GEOTEXTILE FABRIC SHALL MEET THE REQUIREMENTS CLASS 4, TYPE A CONSTRUCTION SURVIVABILITY IN ACCORDANCE WITH AASHTO M 288.

2.05 GEOGRID

A. SEE REFERENCE STANDARDS FOR MIRAFI GEOGRID AS MANUFACTURED BY TENCATE GEOSYNTHETICS.
B. DESIGN REDUCTION FACTORS (MINIMUM)
1. DURABILITY = 1.20
2. INSTALLATION DAMAGE = 1.53
3. CREEP REDUCTION = 1.77
4. $RF_{ov} \geq 2.50$. IN ACCORDANCE WITH PUB 408, §738.2.(b), $RF_{ov} = RF_C \times RD_D \times RF_{FD}$

MAY VARY WITH ACTUAL DESIGN, VALUES ARE MINIMUMS.

C. MIRAFI GEOGRID SHALL HAVE THE FOLLOWING NOMINAL TENSILE STRENGTH WHEN DETERMINED USING THE REDUCTION FACTORS ABOVE AND A RESISTANCE FACTOR OF 0.8 (TENSION)/0.9 (CONNECTION)
1.MIRAFI 8XT=1,822 LB/FT & 2,049 LB/FT
2.MIRAFI 10XT=2,339 LB/FT & 2,630 LB/FT
3.MIRAFI 20XT=3,374 LB/FT & 3,796 LB/FT
4.MIRAFI 22XT=5,061 LB/FT & 5,694 LB/FT

2.06 DRAINAGE AGGREGATE AND WALL INFILL

A. DRAINAGE AGGREGATE (AND WALL INFILL FOR RETAINING WALLS DESIGNED AS MODULAR GRAVITY STRUCTURES) SHALL BE A DURABLE CRUSHED STONE CONFORMING TO NO. 57 SIZE PER PUBLICATION 408.

2.07 REINFORCED FILL

A. MATERIAL USED AS REINFORCED BACKFILL MATERIAL IN THE REINFORCED ZONE (IF APPLICABLE) SHALL BE A GRANULAR FILL MATERIAL MEETING THE REQUIREMENTS OF USCS SOIL TYPE GW, GP, SW OR SP PER ASTM D2487 OR ALTERNATIVELY BY AASHTO GROUP CLASSIFICATION A–1–A OR A–3 PER AASHTO M 145 AND MEET THE FOLLOWING PARTICLE–SIZE DISTRIBUTION REQUIREMENTS PER ASTM D422.

U.S. STANDARD SIEVE SIZE	% PASSING
1–½"	100
NO. 4	0–100
NO. 40	0–60
NO. 100	0–10
NO. 200	0–5

B. THE REINFORCED BACKFILL MATERIAL SHALL BE FREE OF SOD, PEAT, ROOTS, OR OTHER ORGANIC OR DELETERIOUS MATTER INCLUDING, BUT NOT LIMITED TO, ICE, SNOW, OR FROZEN SOILS. MATERIALS PASSING THE NO. 40 SIEVE SHALL HAVE A LIQUID LIMIT LESS THAN 25 AND PLASTICITY INDEX LESS THAN 6 PER ASTM D4318. ORGANIC CONTENT IN THE BACKFILL MATERIAL SHALL BE LESS THAN 1% PER AASHTO T–267 AND THE PH OF THE BACKFILL MATERIAL SHALL BE BETWEEN 5 AND 8.

Mark	Description	By	Chk'd.	Recm'd.	Date
REVISIONS					

5 / 15 / 2018

PENNSYLVANIA
DEPARTMENT OF TRANSPORTATION
RECOMMENDED

Thomas P Macioce

CHIEF BRIDGE ENGINEER

COMMONWEALTH OF PENNSYLVANIA
REGISTERED PROFESSIONAL
JAMES A. McKELVEY III
ENGINEER
No. 044071

EARTH ENGINEERING INCORPORATED

COMMONWEALTH OF PENNSYLVANIA
DEPARTMENT OF TRANSPORTATION

REDI-ROCK POSITIVE CONNECTION RETAINING WALL SYSTEM

GENERAL NOTES AND SPECIFICATIONS

PENNDOT DRAWING # 2015-067

SHEET 1 OF 11

DES: PFM | DWG: PFM | CKD: MK

C. REINFORCED BACKFILL SHALL NOT BE COMPRISED OF CRUSHED OR RECYCLED CONCRETE, RECYCLED ASPHALT, BOTTOM ASH, SHALE, OR ANY OTHER MATERIAL THAT MAY DEGRADE, CREEP, OR EXPERIENCE A LOSS IN SHEAR STRENGTH OR A CHANGE IN PH OVER TIME.

2.08 LEVELING PAD
A. THE PRECAST MODULAR BLOCK UNITS SHALL BE PLACED ON A LEVELING PAD CONSTRUCTED FROM CLASS A CONCRETE. THE LEVELING PAD SHALL BE CONSTRUCTED TO THE DIMENSIONS AND LIMITS SHOWN ON THE RETAINING WALL DESIGN DRAWINGS PREPARED BY THE RETAINING WALL DESIGN ENGINEER.

2.09 DRAINAGE
A. DRAINAGE PIPE
1. DRAINAGE COLLECTION PIPE SHALL BE AT LEAST A 6–INCH DIAMETER, 3–HOLE PERFORATED, PIPE IN ACCORDANCE WITH PUB. 408, SECTION 610
2. THE DRAINAGE PIPE SHALL BE MANUFACTURED IN ACCORDANCE WITH ASTM D1248 FOR HDPE PIPE AND FITTINGS.

2.10 DELIVERY, STORAGE AND HANDLING
A. THE RETAINING WALL INSTALLATION CONTRACTOR SHALL INSPECT THE MATERIALS UPON DELIVERY TO ENSURE THAT THE PROPER TYPE, GRADE, AND COLOR OF MATERIALS HAVE BEEN DELIVERED.

B. THE RETAINING WALL INSTALLATION CONTRACTOR SHALL STORE AND HANDLE ALL MATERIALS IN ACCORDANCE WITH THE MANUFACTURER'S RECOMMENDATIONS AS SPECIFIED HEREIN AND IN A MANNER THAT PREVENTS DETERIORATION OR DAMAGE DUE TO MOISTURE, TEMPERATURE CHANGES, CONTAMINANTS, CORROSION, BREAKING, CHIPPING, UV EXPOSURE, OR OTHER CAUSES. DAMAGED MATERIALS SHALL NOT BE INCORPORATED INTO THE WORK.

C. GEOSYNTHETICS
1. ALL GEOSYNTHETIC MATERIALS SHALL BE HANDLED IN ACCORDANCE WITH ASTM D4873. PROVIDE CLEAR IDENTIFICATION TO EVERY ROLL GEOGRID THAT PROVIDES IDENTIFICATION OF PRODUCT DESIGNATION, THE MANUFACTURER'S NAME, LOT NUMBER, MATERIAL QUANTITY, AND CLEARLY DIFFERENTIATES BETWEEN ROLLS OF SIMILAR GEOGRID. PROTECT THE GEOGRID FROM DIRECT SUNLIGHT, ULTRA–VIOLET RAYS, TEMPERATURE GREATER THAN 140°F, DIRT, DUST, AND DEBRIS.

D. PRECAST MODULAR BLOCKS
1. PRECAST MODULAR BLOCKS SHALL BE STORED IN AN AREA WITH POSITIVE DRAINAGE AWAY FROM THE BLOCKS. BE CAREFUL TO PROTECT THE BLOCK FROM MUD AND EXCESSIVE CHIPPING AND BREAKAGE. PRECAST MODULAR BLOCKS SHALL NOT BE STACKED MORE THAN THREE (3) UNITS HIGH IN THE STORAGE AREA.

E. DRAINAGE AGGREGATE AND BACKFILL STOCKPILES
1. DRAINAGE AGGREGATE OR BACKFILL MATERIAL SHALL NOT BE PILED OVER UNSTABLE SLOPES OR AREAS OF THE PROJECT SITE WITH BURIED UTILITIES.
2. DRAINAGE AGGREGATE AND/OR REINFORCED FILL MATERIAL SHALL NOT BE STAGED WHERE IT MAY BECOME MIXED WITH OR CONTAMINATED BY POOR DRAINING FINE–GRAINED SOILS SUCH AS CLAY OR SILT.

2.11 QUALITY ASSURANCE
A. RETAINING WALL INSTALLATION CONTRACTOR QUALIFICATIONS. IN ORDER TO DEMONSTRATE BASIC COMPETENCE IN THE CONSTRUCTION OF PRECAST MODULAR BLOCK WALLS, THE RETAINING WALL INSTALLATION CONTRACTOR SHALL DOCUMENT COMPLIANCE WITH THE FOLLOWING:
1. EXPERIENCE.
a. CONSTRUCTION EXPERIENCE WITH A MINIMUM OF 30,000 SQUARE FEET OF THE PROPOSED PRECAST MODULAR BLOCK RETAINING WALL SYSTEM.
b. CONSTRUCTION OF AT LEAST TEN (10) PRECAST MODULAR BLOCK (LARGE BLOCK) RETAINING WALL STRUCTURES WITHIN THE PAST THREE (3) YEARS.
c. CONSTRUCTION OF AT LEAST 50,000 SQUARE FEET OF PRECAST MODULAR BLOCK (LARGE BLOCK) RETAINING WALLS WITHIN THE PAST THREE (3) YEARS.
2. RETAINING WALL INSTALLATION CONTRACTOR EXPERIENCE DOCUMENTATION FOR EACH QUALIFYING PROJECT SHALL INCLUDE:
a. PROJECT NAME AND LOCATION
b. DATE (MONTH AND YEAR) OF CONSTRUCTION COMPLETION
c. CONTACT INFORMATION OF OWNER OR GENERAL CONTRACTOR
d. TYPE (TRADE NAME) OF PRECAST MODULAR BLOCK SYSTEM BUILT
e. MAXIMUM HEIGHT OF THE WALL CONSTRUCTED
f. FACE AREA OF THE WALL CONSTRUCTED
3. IN LIEU OF THE REQUIREMENTS SET FORTH IN ITEMS 1 AND 2 ABOVE, THE RETAINING WALL INSTALLATION CONTRACTOR MUST BE A CERTIFIED PRECAST MODULAR BLOCK RETAINING WALL INSTALLATION CONTRACTOR AS DEMONSTRATED BY SATISFACTORY COMPLETION OF A CERTIFIED PRECAST MODULAR BLOCK RETAINING WALL INSTALLATION TRAINING PROGRAM ADMINISTERED BY THE PRECAST MODULAR BLOCK MANUFACTURER.

B. RETAINING WALL DESIGN ENGINEER QUALIFICATIONS AND STATEMENT OF EXPERIENCE. THE RETAINING WALL DESIGN ENGINEER SHALL SUBMIT A WRITTEN STATEMENT AFFIRMING THAT HE OR SHE HAS THE FOLLOWING MINIMUM QUALIFICATIONS AND EXPERIENCE.
1. THE RETAINING WALL DESIGN ENGINEER SHALL BE LICENSED TO PRACTICE IN THE COMMONWEALTH OF PENNSYLVANIA.
2. THE RETAINING WALL DESIGN ENGINEER SHALL BE INDEPENDENTLY CAPABLE OF PERFORMING ALL INTERNAL AND EXTERNAL STABILITY ANALYSES, INCLUDING THOSE FOR SEISMIC LOADING, COMPOUND STABILITY, RAPID DRAW–DOWN, AND DEEP–SEATED, GLOBAL MODES OF FAILURE.
3. THE RETAINING WALL DESIGN ENGINEER SHALL AFFIRM IN WRITING THAT HE OR SHE HAS PERSONALLY SUPERVISED THE DESIGN OF THE RETAINING WALLS FOR THE PROJECT, THAT THE DESIGN CONSIDERS ALL THE REQUIREMENTS LISTED IN PARAGRAPH 1.02, AND THAT HE OR SHE ACCEPTS RESPONSIBILITY AS THE DESIGN ENGINEER OF RECORD FOR THE RETAINING WALLS CONSTRUCTED ON THE PROJECT.
4. THE RETAINING WALL DESIGN ENGINEER SHALL AFFIRM IN WRITING THAT HE OR SHE HAS PERSONALLY DESIGNED IN EXCESS OF 100,000 FACE SQUARE FEET OF MODULAR BLOCK EARTH RETAINING WALLS WITHIN THE PREVIOUS THREE (3) YEARS.

C. THE DEPARTMENT RESERVES THE RIGHT TO REJECT THE DESIGN SERVICES OF ANY ENGINEER OR ENGINEERING FIRM WHO, IN THE SOLE OPINION OF THE OWNER, DOES NOT POSSESS THE REQUISITE EXPERIENCE OR QUALIFICATIONS.

PART 3 – EXECUTION
3.01 GENERAL
A. ALL WORK SHALL BE PERFORMED IN ACCORDANCE WITH OSHA SAFETY STANDARDS, STATE AND LOCAL BUILDING CODES, AND MANUFACTURER'S REQUIREMENTS.
B. THE GENERAL CONTRACTOR IS RESPONSIBLE FOR THE LOCATION AND PROTECTION OF ALL EXISTING UNDERGROUND UTILITIES. ANY NEW UTILITIES PROPOSED FOR INSTALLATION IN THE VICINITY OF THE RETAINING WALL SHALL BE INSTALLED CONCURRENT WITH RETAINING WALL CONSTRUCTION. THE GENERAL CONTRACTOR SHALL COORDINATE THE WORK OF SUBCONTRACTORS AFFECTED BY THIS REQUIREMENT.
C. NEW UTILITIES INSTALLED BELOW THE RETAINING WALL SHALL BE BACKFILLED AND COMPACTED TO A MINIMUM OF 95% MAXIMUM DRY DENSITY PER ASTM D698.

D. THE GENERAL CONTRACTOR IS RESPONSIBLE TO ENSURE THAT SAFE EXCAVATIONS AND EMBANKMENTS ARE MAINTAINED THROUGHOUT THE COURSE OF THE PROJECT.

E. ALL WORK SHALL BE INSPECTED BY THE OWNER.

3.02 EXAMINATION
A. PRIOR TO CONSTRUCTION, THE CONTRACTOR, RETAINING WALL INSTALLATION CONTRACTOR, AND GEOTECHNICAL ENGINEER SHALL EXAMINE THE AREAS IN WHICH THE RETAINING WALL WILL BE CONSTRUCTED TO EVALUATE COMPLIANCE WITH THE REQUIREMENTS FOR INSTALLATION TOLERANCES, WORKER SAFETY, AND ANY SITE CONDITIONS AFFECTING PERFORMANCE OF THE COMPLETED STRUCTURE. INSTALLATION SHALL PROCEED ONLY AFTER UNSATISFACTORY CONDITIONS HAVE BEEN CORRECTED.

3.03 PREPARATION
A. FILL SOIL
1. THE GEOTECHINCAL ENGINEER SHALL VERIFY THAT REINFORCED BACKFILL PLACED IN THE REINFORCED SOIL ZONE SATISFIES THE CRITERIA OF THIS SECTION.
2. THE GEOTECHNICAL ENGINEER SHALL VERIFY THAT ANY FILL SOIL INSTALLED IN THE FOUNDATION AND RETAINED SOIL ZONES OF THE RETAINING WALL SATISFIES THE SPECIFICATION OF THE RETAINING WALL DESIGN ENGINEER AS SHOWN ON THE CONSTRUCTION DRAWINGS.

B. EXCAVATION.
1. THE CONTRACTOR SHALL EXCAVATE TO THE LINES AND GRADES REQUIRED FOR CONSTRUCTION OF THE PRECAST MODULAR BLOCK RETAINING WALL AS SHOWN ON THE CONSTRUCTION DRAWINGS. THE CONTRACTOR SHALL MINIMIZE OVER–EXCAVATION. EXCAVATION SUPPORT, IF REQUIRED, SHALL BE THE RESPONSIBILITY OF THE CONTRACTOR.
2. OVER–EXCAVATED SOIL SHALL BE REPLACED WITH COMPACTED FILL IN CONFORMANCE WITH THE SPECIFICATIONS OF THE RETAINING WALL DESIGN ENGINEER.
3. EMBANKMENT EXCAVATIONS SHALL BE BENCH CUT AS DIRECTED BY THE PROJECT GEOTECHNICAL ENGINEER AND INSPECTED BY THE REPRESENTATIVE FOR COMPLIANCE.

C. FOUNDATION PREPARATION.PRIOR TO CONSTRUCTION OF THE PRECAST MODULAR BLOCK RETAINING WALL, THE LEVELING PAD AREA, AND UNDERCUT ZONE (IF APPLICABLE) SHALL BE CLEARED OF ANY DEBRIS. ALL TOPSOIL, BRUSH, FROZEN SOIL, AND ORGANIC MATERIAL SHALL BE REMOVED. ADDITIONAL FOUNDATION SOILS FOUND TO BE UNSATISFACTORY BEYOND THE SPECIFIED UNDERCUT LIMITS SHALL BE UNDERCUT AND REPLACED WITH APPROVED FILL AS DIRECTED BY THE PROJECT GEOTECHNICAL ENGINEER. THE CONTRACTOR SHALL ENSURE THAT THE UNDERCUT LIMITS ARE CONSISTENT WITH THE REQUIREMENTS OF THE PROJECT GEOTECHNICAL ENGINEER AND THAT ALL SOIL FILL MATERIAL IS PROPERLY COMPACTED ACCORDING TO PROJECT SPECIFICATIONS.

D. LEVELING PAD
1. THE LEVELING PAD SHALL BE CONSTRUCTED TO PROVIDE A LEVEL, HARD SURFACE ON WHICH TO PLACE THE FIRST COURSE OF PRECAST MODULAR BLOCK UNITS. THE LEVELING PAD SHALL BE PLACED IN THE DIMENSIONS SHOWN ON THE RETAINING WALL CONSTRUCTION DRAWINGS AND EXTEND TO THE LIMITS INDICATED.
2. THE UNREINFORCED CONCRETE LEVELING PAD SHALL BE PLACED WITH THE DIMENSIONS SHOWN IN THE RETAINING WALL CONSTRUCTION DRAWINGS. THE RETAINING WALL INSTALLATION CONTRACTOR SHALL ERECT PROPER FORMS AS REQUIRED TO ENSURE THE ACCURATE PLACEMENT OF THE CONCRETE LEVELING PAD ACCORDING TO THE RETAINING WALL CONSTRUCTION DRAWINGS.

3.04 PRECAST MODULAR BLOCK WALL SYSTEM INSTALLATION
A. THE PRECAST MODULAR BLOCK STRUCTURE SHALL BE CONSTRUCTED IN ACCORDANCE WITH THE CONSTRUCTION DRAWINGS, THESE SPECIFICATIONS, AND THE RECOMMENDATIONS OF THE RETAINING WALL SYSTEM COMPONENT MANUFACTURERS. WHERE CONFLICTS EXIST BETWEEN THE MANUFACTURER'S RECOMMENDATIONS AND THESE SPECIFICATIONS, THESE SPECIFICATIONS SHALL PREVAIL.

B. DRAINAGE COMPONENTS. PIPE, GEOTEXTILE, AND DRAINAGE AGGREGATE SHALL BE INSTALLED AS SHOWN ON THE CONSTRUCTION SHOP DRAWINGS.

C. PRECAST MODULAR BLOCK INSTALLATION.
1. THE FIRST COURSE OF BLOCK UNITS SHALL BE PLACED WITH THE FRONT FACE EDGES TIGHTLY ABUTTED TOGETHER ON THE PREPARED LEVELING PAD AT THE LOCATIONS AND ELEVATIONS SHOWN ON THE CONSTRUCTION DRAWINGS. THE RETAINING WALL INSTALLATION CONTRACTOR SHALL TAKE SPECIAL CARE TO ENSURE THAT THE BOTTOM COURSE OF BLOCK UNITS ARE IN FULL CONTACT WITH THE LEVELING PAD, ARE SET LEVEL AND TRUE, AND ARE PROPERLY ALIGNED ACCORDING TO THE LOCATIONS SHOWN ON THE CONSTRUCTION DRAWINGS.
2. BACKFILL SHALL BE PLACED IN FRONT OF THE BOTTOM COURSE OF BLOCKS PRIOR TO PLACEMENT OF SUBSEQUENT BLOCK COURSES. NONWOVEN GEOTEXTILE FABRIC SHALL BE PLACED IN THE V–SHAPED JOINTS BETWEEN ADJACENT BLOCKS. DRAINAGE AGGREGATE SHALL BE PLACED IN THE V–SHAPED JOINTS BETWEEN ADJACENT BLOCKS TO A MINIMUM DISTANCE OF 12 INCHES BEHIND THE BLOCK UNIT.
3. DRAINAGE AGGREGATE SHALL BE PLACED IN 8 INCH MAXIMUM LIFTS AND COMPACTED BY A MINIMUM OF FIVE (5) PASSES OF A VIBRATORY PLATE COMPACTOR CAPABLE EXERTING A MINIMUM OF 350 LBS/IN–WIDTH OF ROLLER OF CENTRIFUGAL FORCE.
4. UNIT CORE FILL SHALL BE PLACED IN THE PRECAST MODULAR BLOCK UNIT VERTICAL CORE SLOT. THE CORE FILL SHALL COMPLETELY FILL THE SLOT TO THE LEVEL OF THE TOP OF THE BLOCK UNIT. THE TOP OF THE BLOCK UNIT SHALL BE BROOM–CLEANED PRIOR TO PLACEMENT OF SUBSEQUENT BLOCK COURSES. NO ADDITIONAL COURSES OF PRECAST MODULAR BLOCKS MAY BE STACKED BEFORE THE UNIT CORE FILL IS INSTALLED IN THE BLOCKS ON THE COURSE BELOW. THE CORE FILL IS REQUIRED FOR BLOCKS WITH GEOGRID REINFORCEMENT (INSTALL GEOGRID BEFORE CORE FILL).
5. NONWOVEN GEOTEXTILE FABRIC SHALL BE PLACED BETWEEN THE DRAINAGE AGGREGATE AND THE REINFORCED FILL AS REQUIRED ON THE DRAWINGS.
6. SUBSEQUENT COURSES OF BLOCK UNITS SHALL BE INSTALLED WITH A RUNNING BOND (HALF BLOCK HORIZONTAL COURSE–TO–COURSE OFFSET). WITH THE EXCEPTION OF 90 DEGREE CORNER UNITS; THE SHEAR CHANNEL OF THE UPPER BLOCK SHALL BE FULLY ENGAGED WITH THE SHEAR KNOBS OF THE BLOCK COURSE BELOW. THE UPPER BLOCK COURSE SHALL BE PUSHED FORWARD TO FULLY ENGAGE THE INTERFACE SHEAR KEY BETWEEN THE BLOCKS AND TO ENSURE CONSISTENT FACE BATTER AND WALL ALIGNMENT. GEOGRID, DRAINAGE AGGREGATE, UNIT CORE FILL, GEOTEXTILE, AND PROPERLY COMPACTED BACKFILL SHALL BE COMPLETE AND IN–PLACE FOR EACH COURSE OF BLOCK UNITS BEFORE THE NEXT COURSE OF BLOCKS IS STACKED.
7. THE ELEVATION OF RETAINED SOIL FILL SHALL NOT BE LESS THAN 1 BLOCK COURSE (18 INCH) BELOW THE ELEVATION OF THE REINFORCED BACKFILL THROUGHOUT THE CONSTRUCTION OF THE RETAINING WALL.
8. IF INCLUDED AS PART OF THE PRECAST MODULAR BLOCK WALL DESIGN, CAP UNITS SHALL BE SECURED WITH AN ADHESIVE IN ACCORDANCE WITH THE PRECAST MODULAR BLOCK MANUFACTURER'S RECOMMENDATION.

D. GEOGRID REINFORCEMENT INSTALLATION.
1. GEOGRID REINFORCEMENT SHALL BE INSTALLED AT THE LOCATIONS AND ELEVATIONS SHOWN ON THE CONSTRUCTION DRAWINGS ON LEVEL FILL COMPACTED TO THE REQUIREMENTS OF THIS SPECIFICATION.
2. CONTINUOUS 12–INCH WIDE STRIPS OF GEOGRID REINFORCEMENT SHALL BE PASSED COMPLETELY THROUGH THE VERTICAL CORE SLOT OF THE PRECAST MODULAR BLOCK UNIT AND EXTENDED TO THE EMBEDMENT LENGTH SHOWN ON THE CONSTRUCTION PLANS. THE STRIPS SHALL BE STAKED OR ANCHORED AS NECESSARY TO MAINTAIN A TAUT CONDITION.
3. REINFORCEMENT LENGTH (L) OF THE GEOGRID REINFORCEMENT IS MEASURED FROM THE BACK OF THE PRECAST MODULAR BLOCK UNIT. THE CUT LENGTH (LC) IS TWO TIMES THE REINFORCEMENT LENGTH PLUS ADDITIONAL LENGTH THROUGH THE BLOCK FACING UNIT. THE CUT LENGTH IS CALCULATED AS FOLLOWS:

LC = 2*L + 3 FT (28–INCH BLOCK UNIT)
LC = 2*L + 5 FT (41–INCH BLOCK UNIT)

4. THE GEOGRID STRIP SHALL BE CONTINUOUS THROUGHOUT ITS ENTIRE LENGTH AND MAY NOT BE SPLICED. THE GEOGRID SHALL BE FURNISHED IN NOMINAL, PREFABRICATED ROLL WIDTHS OF 12 INCHES ± ½ INCH NO FIELD MODIFICATION OF THE GEOGRID ROLL WIDTH SHALL BE PERMITTED.
5. NEITHER RUBBER TIRE NOR TRACK VEHICLES MAY OPERATE DIRECTLY ON THE GEOGRID. CONSTRUCTION VEHICLE TRAFFIC IN THE REINFORCED ZONE SHALL BE LIMITED TO SPEEDS OF LESS THAN 5 MPH ONCE A MINIMUM OF 6 INCHES OF COMPACTED FILL HAS BEEN PLACED OVER THE GEOGRID REINFORCEMENT. SUDDEN BRAKING AND TURNING OF CONSTRUCTION VEHICLES IN THE REINFORCED ZONE SHALL BE AVOIDED.

E. CONSTRUCTION TOLERANCE. ALLOWABLE CONSTRUCTION TOLERANCE OF THE RETAINING WALL SHALL BE AS FOLLOWS:
1. DEVIATION FROM THE DESIGN BATTER AND HORIZONTAL ALIGNMENT, WHEN MEASURED ALONG A 10 FOOT STRAIGHT WALL SECTION, SHALL NOT EXCEED 3/4 INCH.
2. DEVIATION FROM THE OVERALL DESIGN BATTER SHALL NOT EXCEED 1/2 INCH PER 10 FOOT OF WALL HEIGHT.
3. THE MAXIMUM ALLOWABLE OFFSET (HORIZONTAL BULGE) OF THE FACE IN ANY PRECAST MODULAR BLOCK JOINT SHALL BE 1/2 INCH.
4. 4. THE BASE OF THE PRECAST MODULAR BLOCK WALL EXCAVATION SHALL BE WITHIN 2 INCHES OF THE STAKED ELEVATIONS, UNLESS OTHERWISE APPROVED BY THE INSPECTION ENGINEER.
5. DIFFERENTIAL VERTICAL SETTLEMENT OF THE FACE SHALL NOT EXCEED 1 FOOT ALONG ANY 200 FEET OF WALL LENGTH.
6. THE MAXIMUM ALLOWABLE VERTICAL DISPLACEMENT OF THE FACE IN ANY PRECAST MODULAR BLOCK JOINT SHALL BE 1/2 INCH.
7. THE WALL FACE SHALL BE PLACED WITHIN 2 INCHES OF THE HORIZONTAL LOCATION STAKED.

3.05 WALL INFILL AND BACKFILL PLACEMENT
A. BACKFILL MATERIAL PLACED IMMEDIATELY BEHIND THE DRAINAGE AGGREGATE SHALL BE COMPACTED IN ACCORDANCE WITH PUBLICATION 408.
B. COMPACTIVE EFFORT WITHIN 3 FEET OF THE BACK OF THE PRECAST MODULAR BLOCKS SHOULD BE ACCOMPLISHED WITH WALK–BEHIND COMPACTORS. COMPACTION IN THIS ZONE SHALL BE WITHIN 95% OF MAXIMUM DRY DENSITY AT ± 2% OPTIMUM MOISTURE CONTENT AS MEASURED IN ACCORDANCE WITH ASTM D698. HEAVY EQUIPMENT SHOULD NOT BE OPERATED WITHIN 4 FEET OF THE WALL FACE.

C. BACKFILL MATERIAL SHALL BE INSTALLED IN LIFTS THAT DO NOT EXCEED A COMPACTED THICKNESS OF 8 INCHES.

D. AT THE END OF EACH WORK DAY, THE RETAINING WALL INSTALLATION CONTRACTOR SHALL GRADE THE SURFACE OF THE LAST LIFT OF THE GRANULAR WALL INFILL TO A 3% ± 1% SLOPE AWAY FROM THE PRECAST MODULAR BLOCK WALL FACE AND COMPACT IT.

3.06 OBSTRUCTIONS IN THE INFILL AND REINFORCED FILL ZONE
A. THE RETAINING WALL INSTALLATION CONTRACTOR SHALL MAKE ALL REQUIRED ALLOWANCES FOR OBSTRUCTIONS BEHIND AND THROUGH THE WALL FACE IN ACCORDANCE WITH THE APPROVED CONSTRUCTION SHOP DRAWINGS.

B. SHOULD UNPLANNED OBSTRUCTIONS BECOME APPARENT FOR WHICH THE APPROVED CONSTRUCTION SHOP DRAWINGS DO NOT ACCOUNT, THE EFFECTED PORTION OF THE WALL SHALL NOT BE CONSTRUCTED UNTIL THE RETAINING WALL DESIGN ENGINEER CAN APPROPRIATELY ADDRESS THE REQUIRED PROCEDURES FOR CONSTRUCTION OF THE WALL SECTION IN QUESTION.

3.07 COMPLETION
A. FOR WALLS SUPPORTING UNPAVED AREAS, A MINIMUM OF 12 INCHES OF COMPACTED, LOW–PERMEABILITY FILL SHALL BE PLACED OVER THE GRANULAR WALL INFILL ZONE OF THE PRECAST MODULAR BLOCK RETAINING WALL STRUCTURE. THE ADJACENT RETAINED SOIL SHALL BE GRADED TO PREVENT PONDING OF WATER BEHIND THE COMPLETED RETAINING WALL.

B. UNLESS THE AREA IS ALREADY BEING TREATED BY AN APPROPRIATE DOWNSTREAM BMP, A SILT FENCE SHALL BE INSTALLED ALONG THE WALL CREST IMMEDIATELY FOLLOWING CONSTRUCTION. THE SILT FENCE SHALL BE LOCATED 3–TO–4 FEET BEHIND THE UPPERMOST PRECAST MODULAR BLOCK UNIT. THE CREST SLOPE ABOVE THE WALL SHALL BE IMMEDIATELY SEEDED TO ESTABLISH VEGETATION. THE GENERAL CONTRACTOR SHALL ENSURE THAT THE SEEDED SLOPE RECEIVES ADEQUATE IRRIGATION AND EROSION PROTECTION TO SUPPORT GERMINATION AND GROWTH.

C. THE GENERAL CONTRACTOR SHALL CONFIRM THAT THE AS–BUILT PRECAST MODULAR BLOCK WALL GEOMETRIES CONFORM TO THE REQUIREMENTS OF THIS SECTION. THE GENERAL CONTRACTOR SHALL NOTIFY THE OWNER OF ANY DEVIATIONS.

Mark	Description	By	Chk'd.	Recm'd.	Date
REVISIONS					

5 / 15 / 2018

COMMONWEALTH OF PENNSYLVANIA
REGISTERED PROFESSIONAL
JAMES A. McKELVEY III
ENGINEER
No. 044071

EARTH ENGINEERING INCORPORATED

COMMONWEALTH OF PENNSYLVANIA
DEPARTMENT OF TRANSPORTATION

REDI-ROCK POSITIVE CONNECTION RETAINING WALL SYSTEM
GENERAL NOTES AND SPECIFICATIONS

PENNDOT DRAWING # 2015-067

SHEET 2 OF 11

DES: PFM | DWG: PFM | CKD: MK

FIVE DEGREE (5°) SETBACK

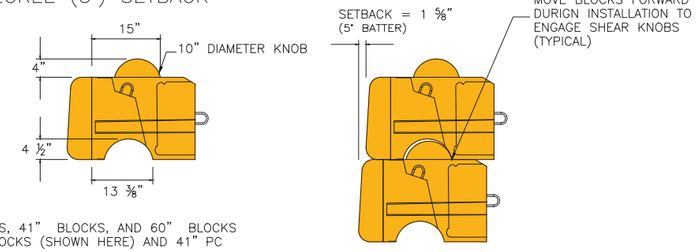

AVAILABLE WITH:
- 28" BLOCKS, 41" BLOCKS, AND 60" BLOCKS
- 28" PC BLOCKS (SHOWN HERE) AND 41" PC BLOCKS

ONE DEGREE (1°) SETBACK

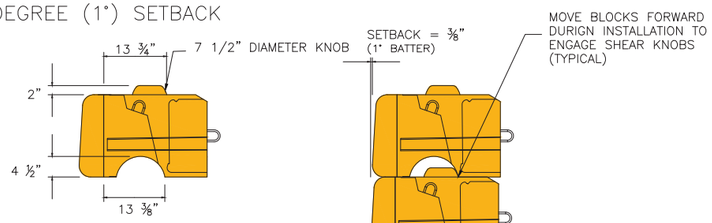

AVAILABLE WITH:
- 28" BLOCKS, 41" BLOCKS, AND 60" BLOCKS
- 28" PC BLOCKS (SHOWN HERE) AND 41" PC BLOCKS

ZERO (0°) SETBACK

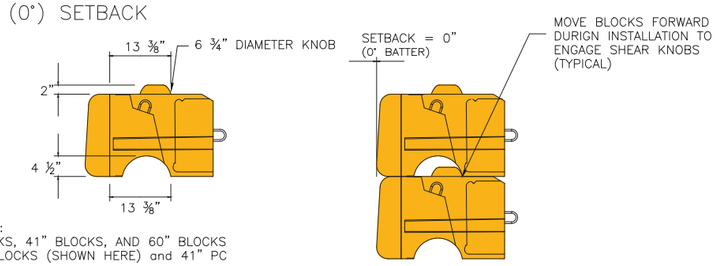

AVAILABLE WITH:
- 28" BLOCKS, 41" BLOCKS, AND 60" BLOCKS
- 28" PC BLOCKS (SHOWN HERE) and 41" PC BLOCKS

BLOCK TO BLOCK SETBACK FOR POSITIVE CONNECTION SYSTEM BLOCK UNITS

NOT TO SCALE

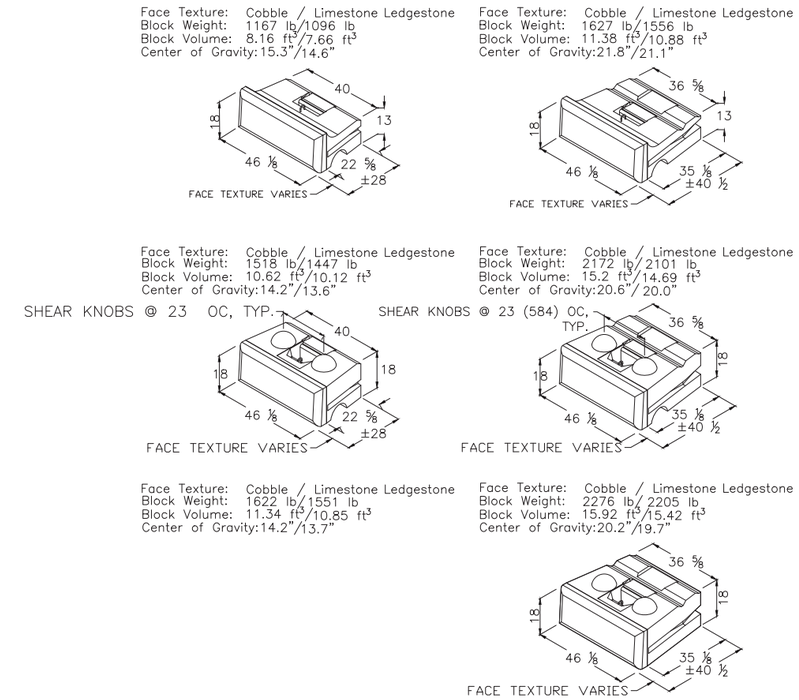

1. Units for dimensions are inches, typical unless noted otherwise.
2. Confirm block production with licensed Redi-Rock manufacturer.
3. Center of Gravity is measured from the back of block.
4. Actual block volumes and weights may vary.
5. Weights are based upon a concrete density of 143 lb/ft³.
6. Blocks contain a vertical slot for a 12" strip of geogrid soil reinforcement.
7. Interface Shear knobs are typically 10" diameter by 4" tall. Smaller knob diameters are available.

POSITIVE CONNECTION WALL SYSTEM BLOCK UNITS

NOT TO SCALE

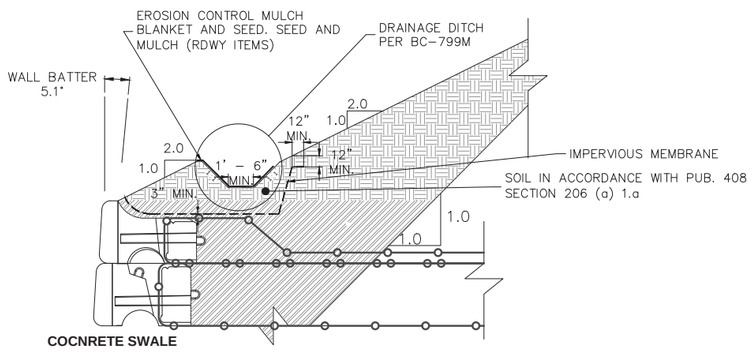

DRAINAGE SWALE OPTIONS

NOT TO SCALE

Mark	Description	By	Chk'd.	Recm'd.	Date

REVISIONS

5 / 15 / 2018

COMMONWEALTH OF PENNSYLVANIA
DEPARTMENT OF TRANSPORTATION

REDI-ROCK POSITIVE CONNECTION RETAINING WALL SYSTEM

SETBACK OPTIONS AND PC SYSTEM UNITS

COMMONWEALTH OF PENNSYLVANIA — REGISTERED PROFESSIONAL — JAMES A. McKELVEY III — ENGINEER — No. 044071

EARTH ENGINEERING INCORPORATED

PENNDOT DRAWING # 2015-067

SHEET 3 OF 11

DES: PFM | DWG: PFM | CKD: MK

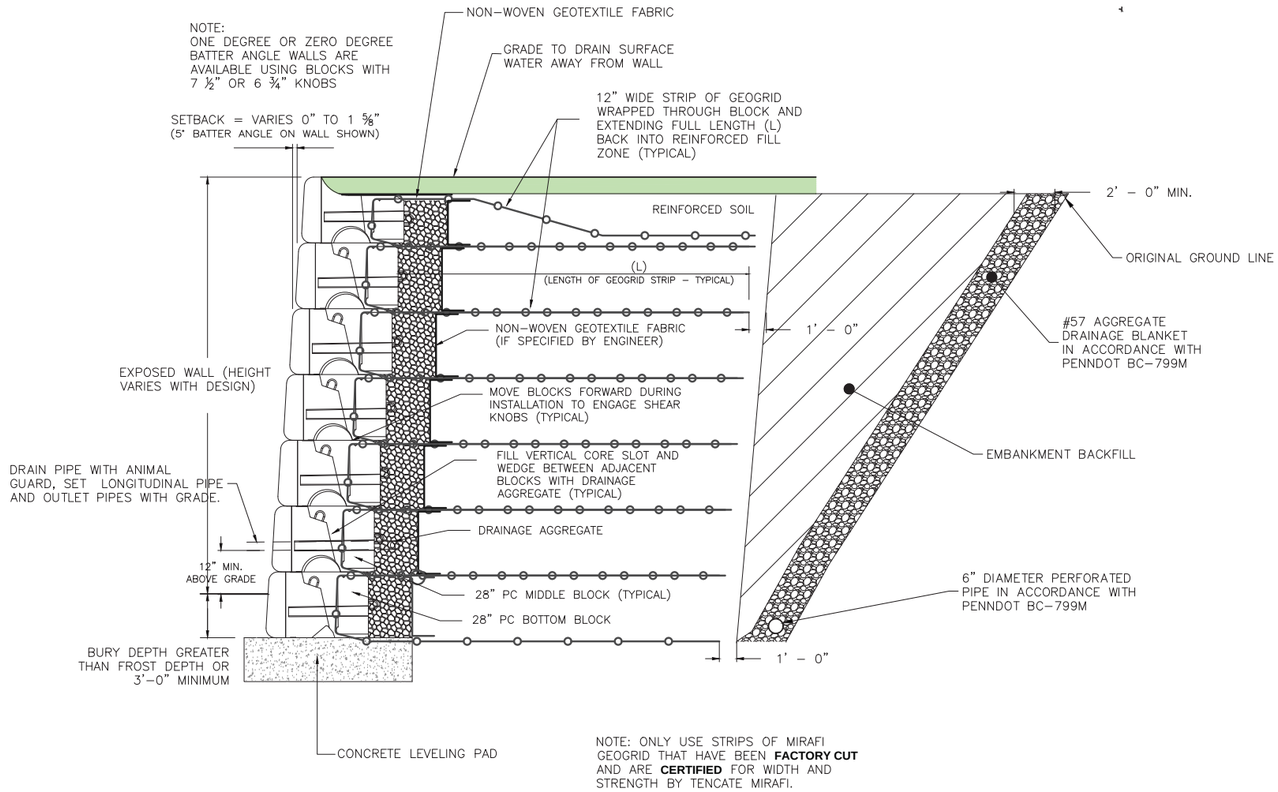

NOTE: ONLY USE STRIPS OF MIRAFI GEOGRID THAT HAVE BEEN **FACTORY CUT** AND ARE **CERTIFIED** FOR WIDTH AND STRENGTH BY TENCATE MIRAFI.

TYPICAL REINFORCED WALL SECTION

NOT TO SCALE

Design Soil Parameters

The soil parameters below are an example and were used to develop the section heights presented on sheets 5, 6, and 7. Wall sections shall be based on design analyses considering anticipated soils to be used. Accordingly, wall section heights may vary based on these parameters.

γ = 120 pcf — moist unit weight of foundation soil and unclassified embankment

φ = 30° — internal angle of friction for the foundation soil and unclassified embankment

c = 0 psf — cohesion of the retained and foundation soil and unclassified embankment

Retaining wall without a 2:1 Backslope

γ = 90pcf/ 120 pcf — moist unit weight of reinforced fill

φ = 34° — internal angle of friction for reinforced fill.

c = 0 psf — cohesion of the reinforced fill.

Retaining wall with a 2:1 Backslope

γ = 120 pcf (Minimum) — moist unit weight of reinforced fill, 90pcf may be utilized if water is not encountered on the site.

φ = 34° — internal angle of friction for reinforced fill.

c = 0 psf — cohesion of the reinforced fill.

Mark	Description	By	Chk'd.	Recm'd.	Date
REVISIONS					

COMMONWEALTH OF PENNSYLVANIA
DEPARTMENT OF TRANSPORTATION

REDI-ROCK POSITIVE CONNECTION RETAINING WALL SYSTEM

POSITIVE CONNECTION WALL CROSS SECTIONS

5 / 15 / 2018

COMMONWEALTH OF PENNSYLVANIA — REGISTERED PROFESSIONAL ENGINEER — JAMES A. McKELVEY III — No. 044071

EARTH ENGINEERING INCORPORATED

PENNDOT DRAWING # 2015-067

SHEET 4 OF 11

DES: PFM | DWG: PFM | CKD: MK

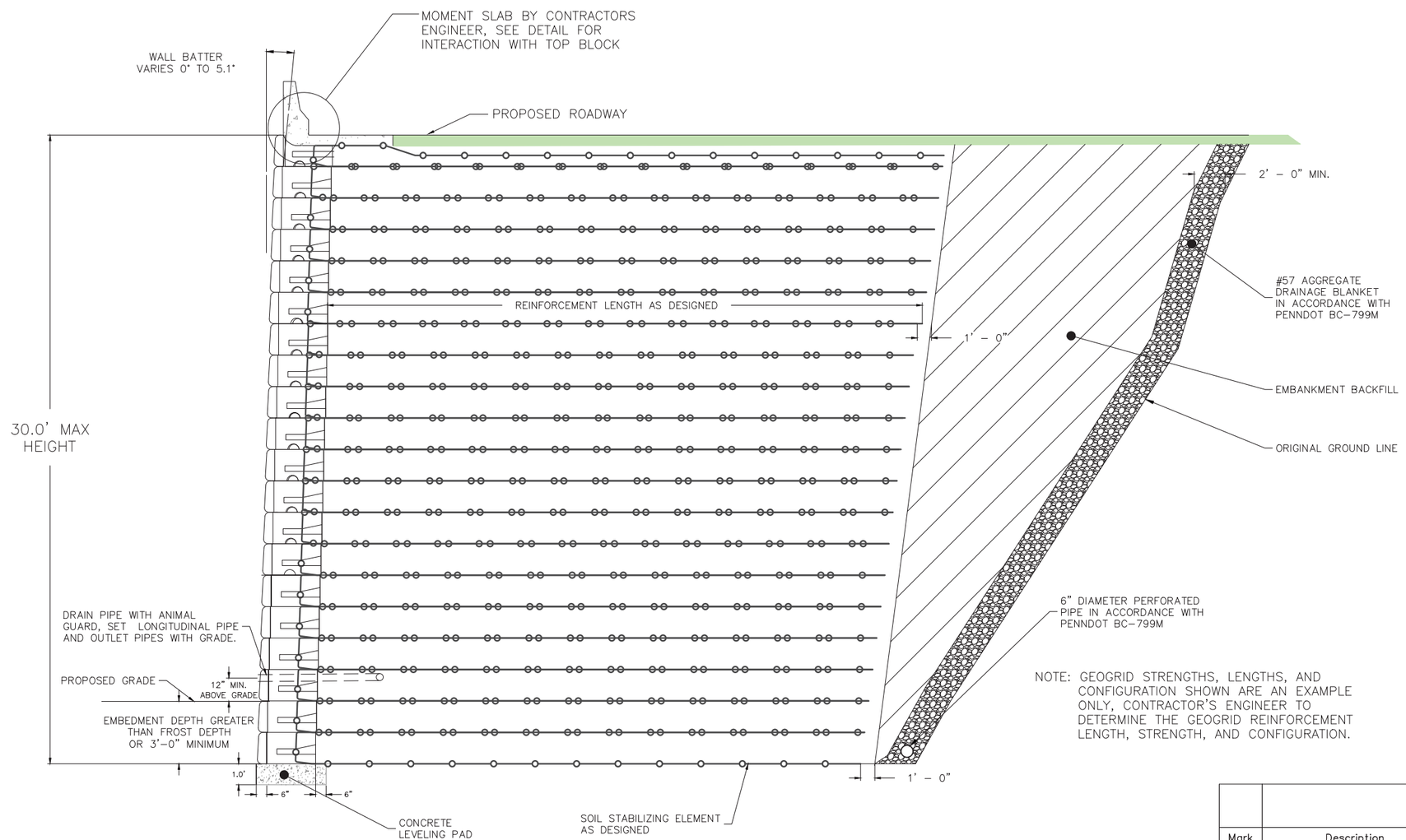

NOTE: GEOGRID STRENGTHS, LENGTHS, AND CONFIGURATION SHOWN ARE AN EXAMPLE ONLY, CONTRACTOR'S ENGINEER TO DETERMINE THE GEOGRID REINFORCEMENT LENGTH, STRENGTH, AND CONFIGURATION.

30.0FT POSITIVE CONNECTION WALL WITH 360PSF TRAFFIC SURCHARGE CROSS SECTION (MAXIMUM HEIGHT)

NOT TO SCALE

Mark	Description	By	Chk'd.	Recm'd.	Date
REVISIONS					

COMMONWEALTH OF PENNSYLVANIA
DEPARTMENT OF TRANSPORTATION

REDI-ROCK POSITIVE CONNECTION RETAINING WALL SYSTEM

POSITIVE CONNECTION WALL CROSS SECTIONS

COMMONWEALTH OF PENNSYLVANIA
REGISTERED PROFESSIONAL ENGINEER
JAMES A. McELVEY III
No. 044071

5 / 15 / 2018

EARTH ENGINEERING INCORPORATED

PENNDOT DRAWING # 2015-067

SHEET 5 OF 11

DES: PFM | DWG: PFM | CKD: MK

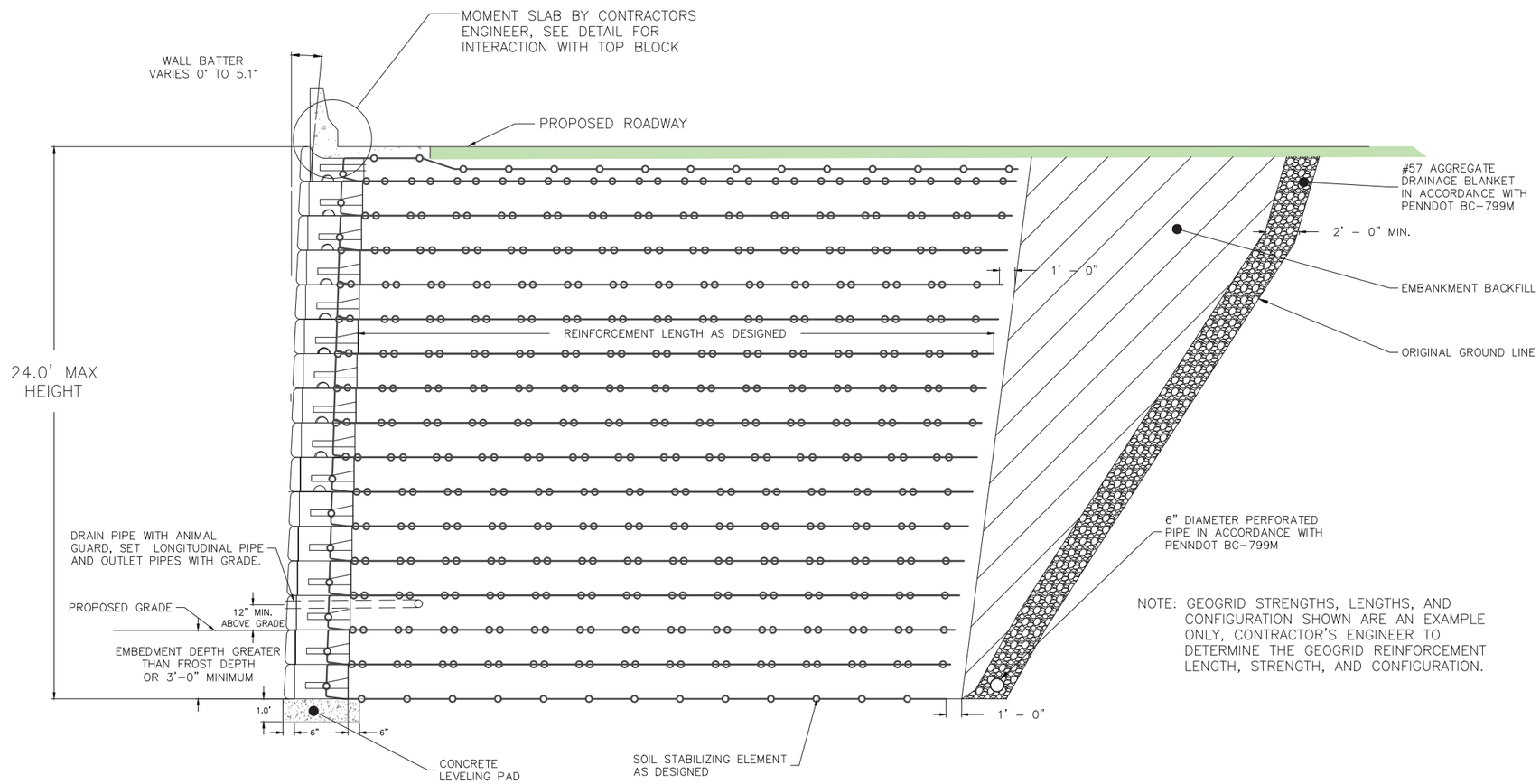

NOTE: GEOGRID STRENGTHS, LENGTHS, AND CONFIGURATION SHOWN ARE AN EXAMPLE ONLY, CONTRACTOR'S ENGINEER TO DETERMINE THE GEOGRID REINFORCEMENT LENGTH, STRENGTH, AND CONFIGURATION.

24.0FT POSITIVE CONNECTION WALL WITH 360PSF TRAFFIC SURCHARGE
CROSS SECTION (MAXIMUM HEIGHT AT 90° OUTSIDE CORNER)

NOT TO SCALE

Mark	Description	By	Chk'd.	Recm'd.	Date
REVISIONS					

COMMONWEALTH OF PENNSYLVANIA
DEPARTMENT OF TRANSPORTATION

REDI-ROCK POSITIVE CONNECTION RETAINING WALL SYSTEM

POSITIVE CONNECTION WALL CROSS SECTIONS

COMMONWEALTH OF PENNSYLVANIA
REGISTERED PROFESSIONAL
JAMES A. McKELVEY III
ENGINEER
No. 044071

EARTH ENGINEERING INCORPORATED

5 / 15 / 2018

PENNDOT DRAWING # 2015-067

SHEET 6 OF 11

DES: PFM DWG: PFM CKD: MK

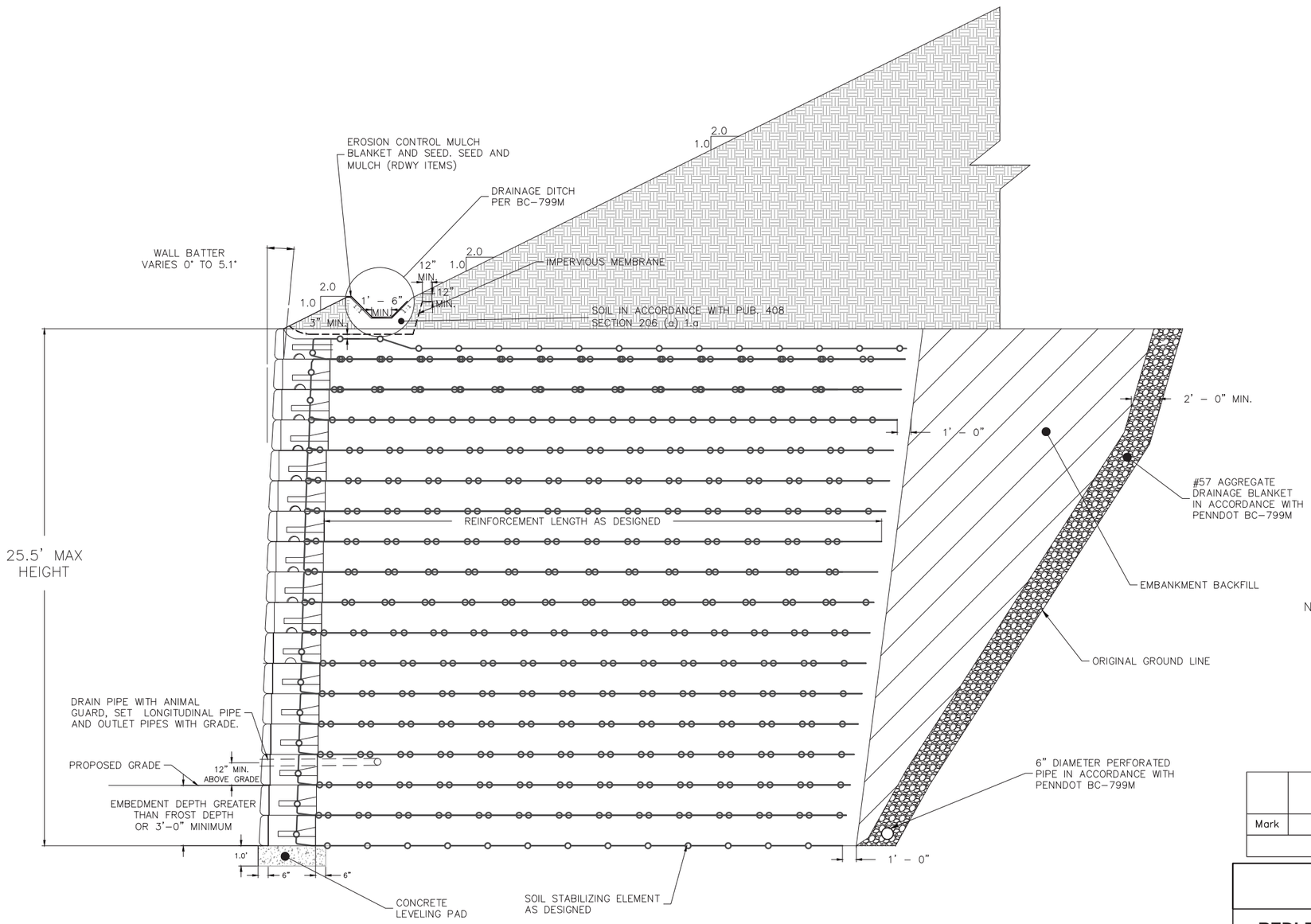

NOTE: GEOGRID STRENGTHS, LENGTHS, AND CONFIGURATION SHOWN ARE AN EXAMPLE ONLY, CONTRACTOR'S ENGINEER TO DETERMINE THE GEOGRID REINFORCEMENT LENGTH, STRENGTH, AND CONFIGURATION.

Mark	Description	By	Chk'd.	Recm'd.	Date
REVISIONS					

25.5FT POSITIVE CONNECTION WALL WITHOUT LIVE LOAD SURCHARGE CROSS SECTION 2:1 BACKSLOPE

NOT TO SCALE

5 / 15 / 2018

COMMONWEALTH OF PENNSYLVANIA
REGISTERED PROFESSIONAL ENGINEER
JAMES A. McKELVEY III
No. 044071

EARTH ENGINEERING INCORPORATED

COMMONWEALTH OF PENNSYLVANIA
DEPARTMENT OF TRANSPORTATION

REDI-ROCK POSITIVE CONNECTION RETAINING WALL SYSTEM

POSITIVE CONNECTION WALL CROSS SECTIONS

PENNDOT DRAWING # 2015-067

SHEET 7 OF 11

DES: PFM | DWG: PFM | CKD: MK

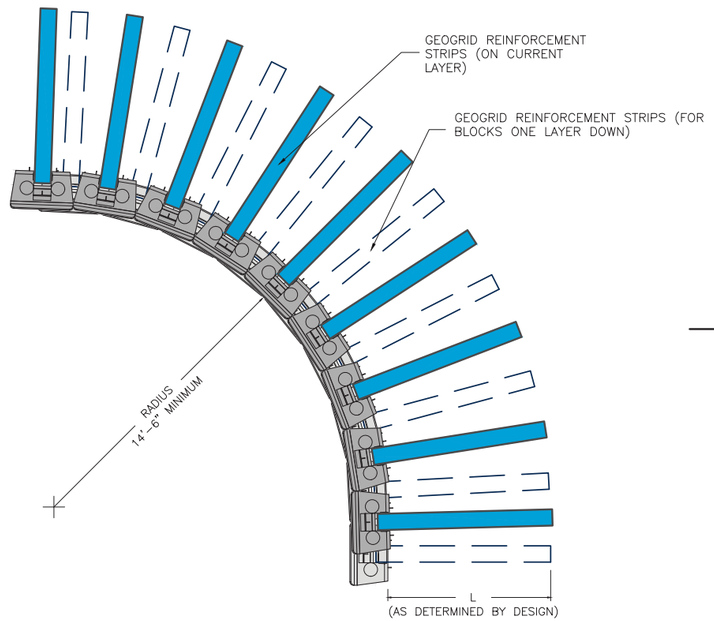

GEOGRID REINFORCEMENT LAYER FOR CONCAVE CURVES AND RADIAL CORNERS

NOT TO SCALE

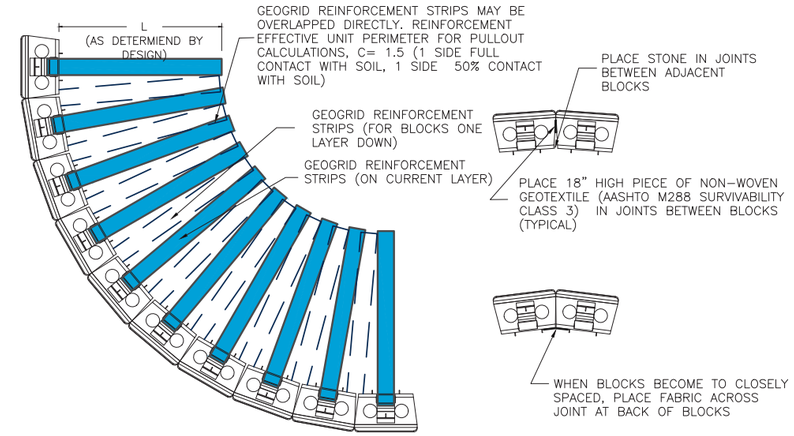

MINIMUM RADIUS FOR BOTTOM ROW

NUMBER OF COURSES	HEIGHT OF WALL	RADIUS FROM FACE OF BLOCK	DISTANCE BETWEEN BLOCKS*
1	1'-6"	14'-6"	0.13"
2	3'-0"	14'-8"	0.21"
3	4'-6"	14'-10"	0.28"
4	6'-0"	15'-0"	0.36"
5	7'-6"	15'-2"	0.43"
6	9'-0"	15'-4"	0.50"
7	10'-6"	15'-6"	0.57"
8	12'-0"	15'-8"	0.63"
9	13'-6"	15'-10"	0.70"
10	15'-0"	16'-0"	0.76"
11	16'-6"	16'-2"	0.83"
12	18'-0"	16'-4"	0.88"
13	19'-6"	16'-6"	0.95"
14	21'-0"	16'-8"	1.01"

* DISTANCE BETWEEN BLOCKS IS MESURED AT THE BACK OF 28" BLOCKS AND 24" BEHIND THE FORM PARTING LINE (BACK EDGE OF FACE TEXTURE) FOR 41" BLOCKS. THIS DISTANCE IS INTENDED TO BE A GUIDE ONLY. MINIMUM RADIUS IS CONTROLLING.

14'-6" IS THE MINIMUM RADIUS FOR REDI-ROCK BLOCKS. IT OCCURS WHEN ALL BLOCKS ARE PLACED TIGHT TOGETHER. A LARGER RADIUS IS REQUIRED ON THE BOTTOM ROW OF A REDI-ROCK WALL TO ACCOUNT FOR THE BATTER BETWEEN THE COURSES OF BLOCKS AND STILL PROVIDED ENOUGH SPACE TO CONSTRUCT THE TOP ROW OF BLOCKS.

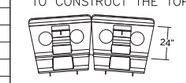

TOP VIEW

* DISTANCE BETWEEN BLOCKS

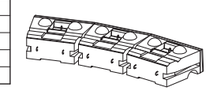

BACK VIEW

GEOGRID REINFORCEMENT LAYER FOR CONVEX CURVES AND RADIAL CORNERS

NOT TO SCALE

Mark	Description	By	Chk'd.	Recm'd.	Date

REVISIONS

COMMONWEALTH OF PENNSYLVANIA
DEPARTMENT OF TRANSPORTATION

REDI-ROCK POSITIVE CONNECTION RETAINING WALL SYSTEM

CURVE DETAILS FOR POSITIVE CONNECTION WALL SYSTEM

5 / 15 / 2018

COMMONWEALTH OF PENNSYLVANIA
REGISTERED PROFESSIONAL ENGINEER
JAMES A. McELVEY III
No. 044071

EARTH ENGINEERING INCORPORATED

PENNDOT DRAWING # 2015-067

SHEET 8 OF 11

DES: PFM DWG: PFM CKD: MK

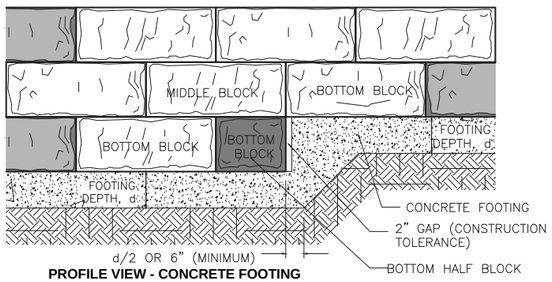

PROFILE VIEW - CONCRETE FOOTING

(NO SCALE)

STEP FOOTING DETAILS

NOT TO SCALE

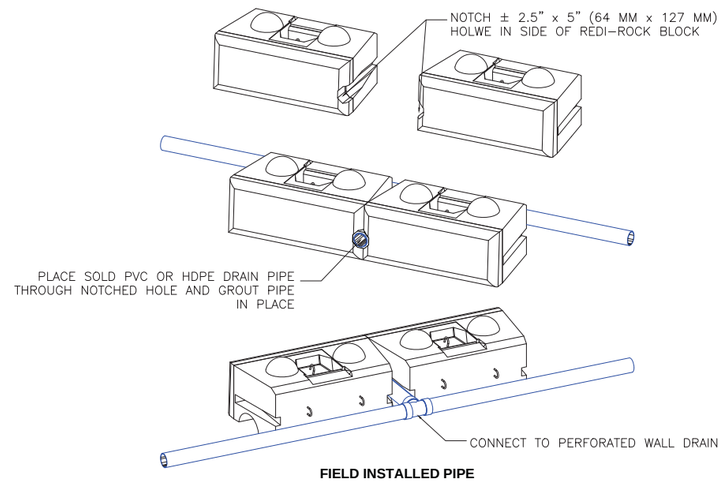

FIELD INSTALLED PIPE

WALL DRAIN WEEP HOLE OPTIONS

NOT TO SCALE

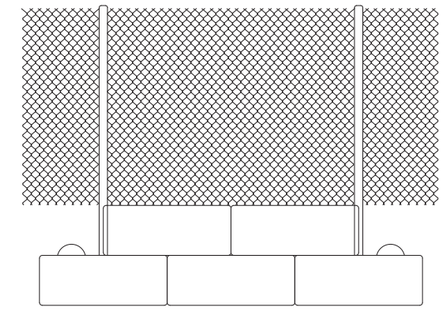

FRONT VIEW

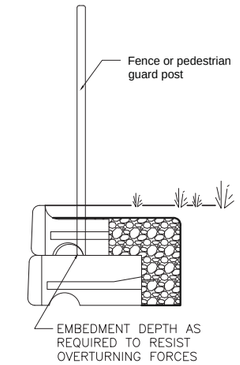

Side View

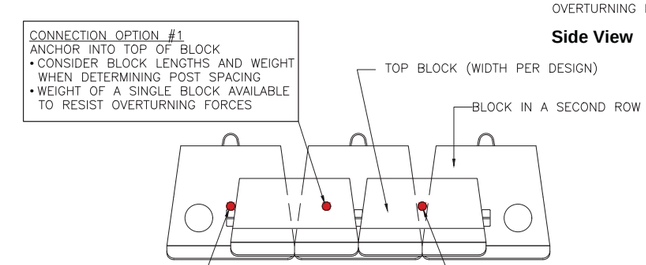

TOP VIEW

CONNECTION OPTION #1
ANCHOR INTO TOP OF BLOCK
- CONSIDER BLOCK LENGTHS AND WEIGHT WHEN DETERMINING POST SPACING
- WEIGHT OF A SINGLE BLOCK AVAILABLE TO RESIST OVERTURNING FORCES

CONNECTION OPTION #2
GROUT POSTS IN V-SHAPED OPENING BETWEEN TOP BLOCKS
- SPACING IN MULTIPLES OF 46 1/8" (1172 mm)
- WEIGHT OF 2 ADJACENT BLOCKS ARE AVAILABLE TO RESIST OVERTURNING FORCES

CONNECTION OPTION #3
CORE THROUGH TOP BLOCK AND GROUT POSTS IN V-SHAPED OPENING BETWEEN LOWER BLOCKS
- SPACING IN MULTIPLES OF of 46 1/8"
- WEIGHT OF 2 ADJACENT BLOCKS ON SECOND LEVEL DOWN AND 2 TOP ROW BLOCKS AVAILABLE TO RESIST OVERTURNING FORCES

FENCE CONNECTION DETAIL

NOT TO SCALE

28" BOTTOM PC BLOCK

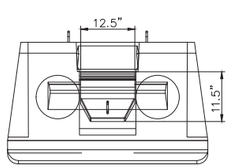

TOP VIEW

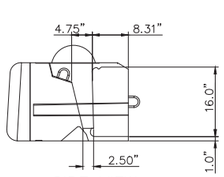

SIDE VIEW

28" MIDDLE PC BLOCK

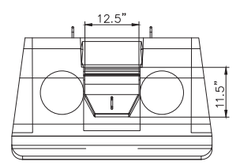

TOP VIEW

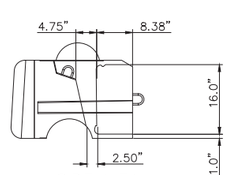

SIDE VIEW

28" TOP PC BLOCK

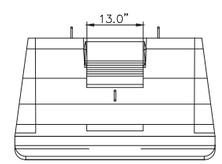

TOP VIEW

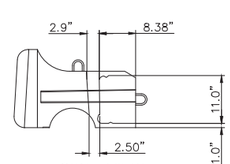

SIDE VIEW

PC BLOCK: SLOT DETAILS

NOT TO SCALE

5 / 15 / 2018

Mark	Description	By	Chk'd.	Recm'd.	Date

REVISIONS

COMMONWEALTH OF PENNSYLVANIA
DEPARTMENT OF TRANSPORTATION

REDI-ROCK POSITIVE CONNECTION RETAINING WALL SYSTEM

RETAINING WALL CONSTRUCTION DETAILS

COMMONWEALTH OF PENNSYLVANIA
REGISTERED PROFESSIONAL ENGINEER
JAMES A. McKELVEY III
No. 044071

EARTH ENGINEERING INCORPORATED

PENNDOT DRAWING # 2015-067

SHEET 9 OF 11

DES: PFM | DWG: PFM | CKD: MK

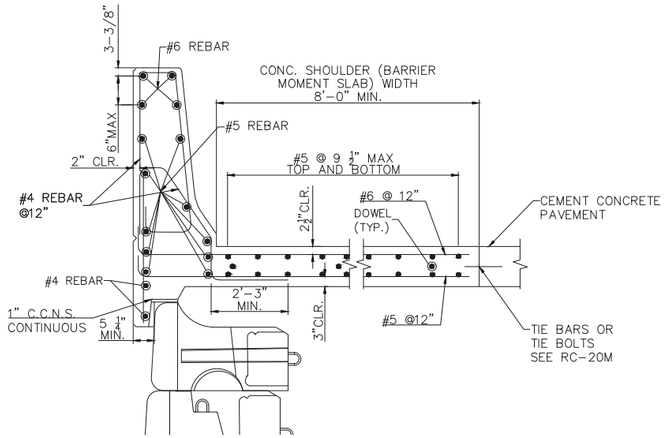

NOTE: MOMENT SLAB AND CAST IN PLACE BARRIER PER BC-799M

CAST-IN-PLACE MOMENT SLAB - FLAT GRADE INSTALLATION

NOT TO SCALE

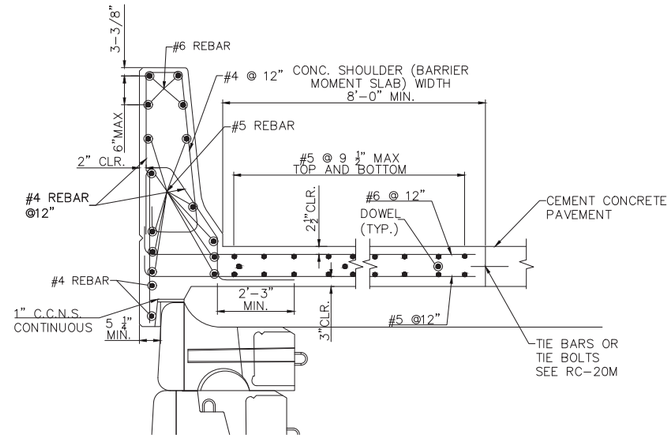

NOTE: MOMENT SLAB AND CAST IN PLACE BARRIER PER BC-799M

CAST-IN-PLACE MOMENT SLAB - SLOPING GRADE INSTALLATION

NOT TO SCALE

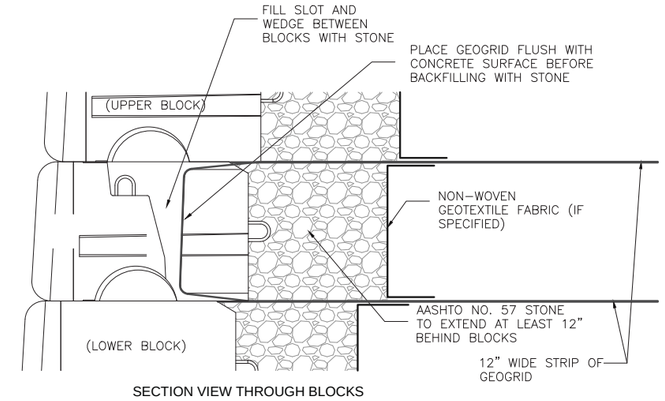

SECTION VIEW THROUGH BLOCKS

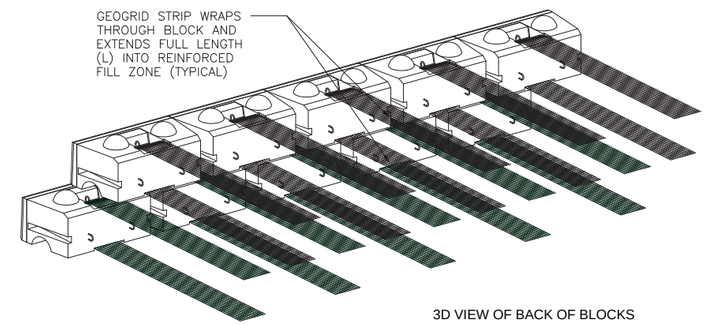

3D VIEW OF BACK OF BLOCKS

POSITIVE CONNECTION (PC) DETAILS

NOT TO SCALE

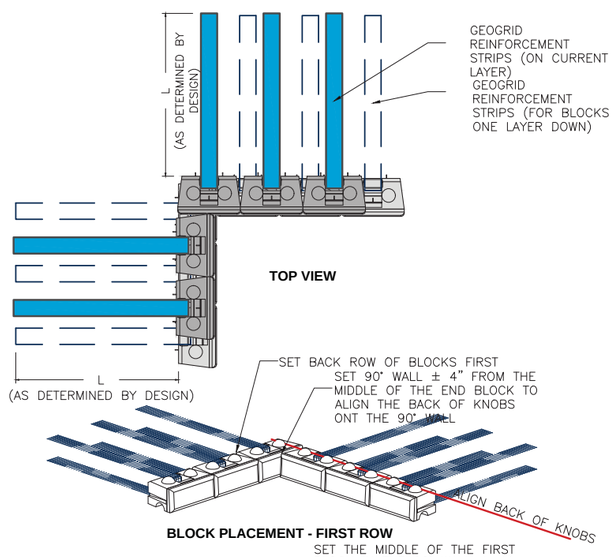

GEOGRID REINFORCEMENT FOR 90° INSIDE CORNER

NOT TO SCALE

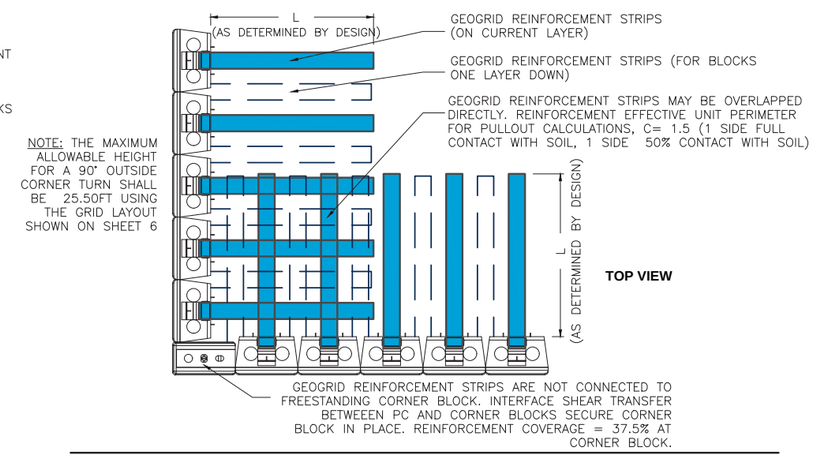

BLOCK LAYOUT FOR 90° OUTSIDE CORNER

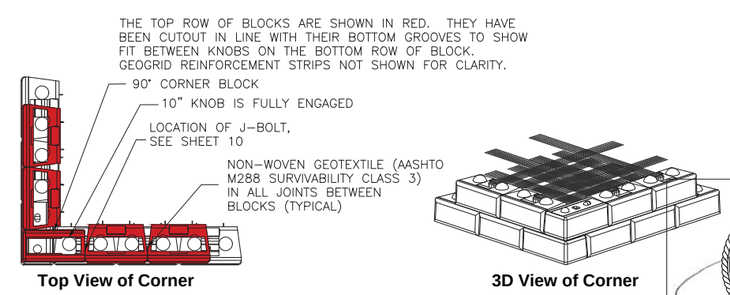

Top View of Corner

3D View of Corner

GEOGRID REINFORCEMENT FOR 90° OUTSIDE CORNER

NOT TO SCALE

Mark	Description	By	Chk'd.	Recm'd.	Date

REVISIONS

5 / 15 / 2018

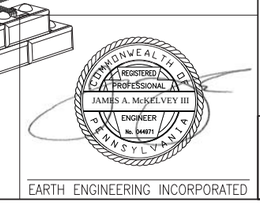

EARTH ENGINEERING INCORPORATED

COMMONWEALTH OF PENNSYLVANIA
DEPARTMENT OF TRANSPORTATION

REDI-ROCK POSITIVE CONNECTION RETAINING WALL SYSTEM

RETAINING WALL CONSTRUCTION DETAILS

PENNDOT DRAWING # 2015-067

SHEET 10 OF 11

DES: PFM | DWG: PFM | CKD: MK

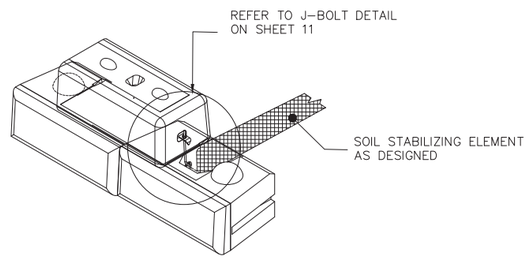

J-BOLT CONNECTION DETAIL FOR 90° CORNER

NOT TO SCALE

Face Texture:	Limestone	Cobblestone	Ledgestone
Block Weight:	1330 lb	1350 lb	1320 lb
Block Volume:	9.3 ft^3	9.4 ft^3	9.2 ft^3

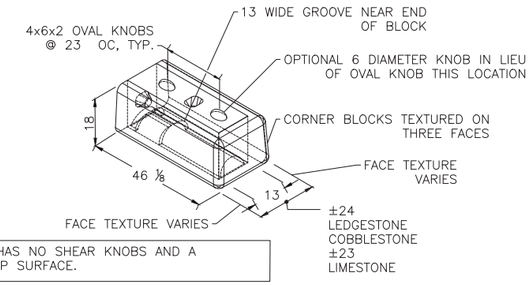

TOP BLOCK HAS NO SHEAR KNOBS AND A TEXTURED TOP SURFACE.

1. Units for dimensions are inches (mm), typical unless noted otherwise.
Confirm block production with licensed Redi-Rock manufacturer.
3. Architectural faces on the blocks have varying texture.
4. Actual block volumes and weights may vary.
5. Weights are based upon a concrete density of 143 lb/ft^3 (2291 kg/m^3).

90° CORNER BLOCK DETAIL

NOT TO SCALE

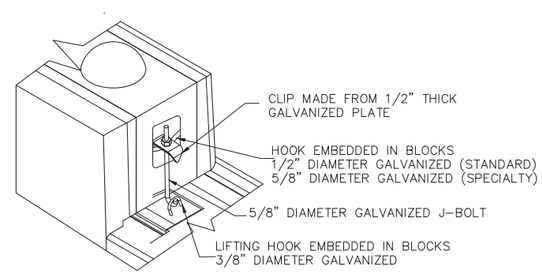

J-BOLT DETAIL

NOT TO SCALE

Mark	Description	By	Chk'd.	Recm'd.	Date

REVISIONS

COMMONWEALTH OF PENNSYLVANIA
DEPARTMENT OF TRANSPORTATION

REDI-ROCK POSITIVE CONNECTION RETAINING WALL SYSTEM

RETAINING WALL CONSTRUCTION DETAILS

5 / 15 / 2018

COMMONWEALTH OF PENNSYLVANIA
REGISTERED PROFESSIONAL
JAMES A. McKELVEY III
ENGINEER
No. 044071

EARTH ENGINEERING INCORPORATED

PENNDOT DRAWING # 2015-067

SHEET 11 OF 11

DES: PFM DWG: PFM CKD: MK

Product:

Item 8550-xxxx – ECO-Span® Precast Arch-Box System
Pretek Group
PennDOT Drawing # 2014-115

Approval Date:	**Initiated By SOL:**
August 7, 2018	483-18-04

Application/Use:

ECO-Span® Precast Arch-Box System developed by Pretek Group, Dayton, Ohio, has been approved for use as an "Alternate" or "as-designed" to precast concrete bridge or culvert system. The use as an "Alternate" or "as-designed" is at the discretion of the District Executive.

ECO-Span® Precast Arch-Box System is a federally registered trademark. The serial number is 85104085.

ECO-Span® Precast Arch-Box System's usage has the following restrictions:

- Span range varies from 12 ft. to 60 ft.
- Maximum fill height varies from 10 ft. to 40 ft. depending on the span length
- Post tensioning is required for ECO-Span® on NHS.
- Post tensioning is required for ECO-Span® on non-NHS systems under fill less than 2 ft.
- Post tensioning requirement for ECO-Span® on non-NHS systems under fill greater than and equal to 2 ft. is at the direction of the District Bridge Engineer.

This standard meets both AASHTO and Design Manual, Part 4 design criteria.

Specifications:

Design/Material/Construction Specifications for this culvert system are specified on PennDOT Drawing # 2014-115, dated August 7, 2018, of ECO-Span® Precast Arch-Box System details for your use.

Comments:

On those projects permitting the use of this system as an alternate, a special provision should be included in the proposal to indicate that the "ECO-Span® Precast Arch-Box System" as an alternate is allowed.
The contractor will be required to revise the pertinent contract drawings as per DM-4, PP 1.10 to show the usage of "ECO-Span® Precast Arch-Box System" and will also be required to reimburse the Department a fee of $1,000 per design for the review and approval of the revision. This should be specified in the contract's Special Provisions.

SPECIFICATIONS FOR THE MANUFACTURE AND DESIGN OF PRECAST THREE SIDED ARCH STRUCTURES, WINGWALLS AND HEADWALLS

1. DESCRIPTION

THESE SPECIFICATIONS ARE FOR A PRECAST THREE SIDED ARCH STRUCTURE, HEADWALLS AND WINGWALLS. PRECAST PIECES SHALL CONFORM TO THE MORE STRINGENT OF THESE SPECIFICATIONS OR ASTM C1504.

2. DESIGN

THE PRECAST UNITS ARE DESIGNED IN ACCORDANCE WITH THE AMERICAN ASSOCIATION OF STATE HIGHWAY AND TRANSPORTATION OFFICIALS "LRFD BRIDGE DESIGN SPECIFICATIONS", 7TH EDITION, AND AS SUPPLEMENTED BY THE PENNDOT DESIGN MANUAL, PART 4 (DM 4)

CONSTRUCTION EQUIPMENT IN EXCESS OF 8 TONS IS NOT ALLOWED OVER THE ARCH STRUCTURE OR WITHIN 3' OF ANY STRUCTURAL ELEMENT UNTIL BACKFILL IS PLACED TO AT LEAST 2' DEPTH OVER THE TOP OF THE ARCH, UNLESS THE STRUCTURE IS DESIGNED FOR LESS THAN 2' EARTH COVER, AS NOTED IN THE SHOP DRAWINGS AND MARKED ON THE SEGMENTS. EQUIPMENT WITH AXLE WEIGHT OR TOTAL WEIGHT GREATER THAN THE DESIGN LOAD SHALL NOT BE OPERATED ON THE STRUCTURE WITHOUT WRITTEN APPROVAL FROM PRETEK GROUP LLC. BACKFILL OPERATIONS SHALL BE ACCOMPLISHED WITHOUT DISTURBANCE OR DISTORTION OF THE PRECAST CONCRETE COMPONENTS.

3. MATERIALS

PROVIDE MATERIALS AND WORKMANSHIP IN ACCORDANCE WITH PUBLICATION 408, AND SUPPLEMENTS THERETO, AND/OR SPECIAL CONDITIONS AS SPECIFIED HEREIN.

1. PRECAST CONCRETE PRODUCTS. PUBLICATION 408 SECTION 714 AND AS FOLLOWS:
   a. CONCRETE COMPONENTS: PROVIDE CONCRETE IN ACCORDANCE WITH PUBLICATION 408 SECTION 704 WITH A MINIMUM 28 DAY COMPRESSIVE STRENGTH OF 5000 PSI FOR CLEAR SPAN LENGTH LESS THAN 20' AND 6000 PSI FOR CLEAR SPAN LENGTH GREATER THAN OR EQUAL TO 20'. DO NOT PLACE CONCRETE WHEN AMBIENT TEMPERATURES ARE BELOW 40° F OR ABOVE 100° F.
   b. CEMENT CONCRETE: PUBLICATION 408 SECTION 704. USE CLASS A CONCRETE FOR FOOTINGS AND CLASS AA FOR CURBS AND BARRIERS. DO NOT USE ADMIXTURE CONTAINING CHLORIDES.

ALL PRECAST ELEMENTS SHALL BE AIR ENTRAINED AND COMPOSED OF PORTLAND CEMENT, FINE AND COARSE AGGREGATES, AND AN AIR ENTRAINED ADMIXTURE THAT CONFORMS TO AASHTO M154. PROVIDE CONCRETE IN ACCORDANCE WITH PUBLICATION 408 SECTIONS 704 & 714. DO NOT PLACE CONCRETE WHEN AMBIENT TEMPERATURES ARE BELOW 40°F OR ABOVE 100°F.

- CONVENTIONAL CONCRETE SHALL HAVE 6±1.5 PERCENT PLASTIC AIR. SELF-CONSOLIDATING CONCRETE SHALL HAVE 7±2 PERCENT PLASTIC AIR.
- PORTLAND CEMENT SHALL CONFORM TO ASTM C150 TYPE I, TYPE II, OR TYPE III CEMENT
- COARSE AGGREGATE SHALL MEET PUBLICATION 408 SECTION 703 AND HAVE A MAXIMUM SIZE OF 1 INCH
- WATER REDUCING ADMIXTURES FOR THE PURPOSE OF INCREASING THE WORKABILITY OF THE CONCRETE, MUST BE BULLETIN 15 APPROVED.
- ADMIXTURES CONTAINING CHLORIDES ARE NOT ALLOWED TO BE ADDED TO THE CONCRETE
- CEMENT CONTENT MUST MEET PUBLICATION 408 SECTION 704 TABLE A.
- SELF-CONSOLIDATION CONCRETE MAY BE USED ACCORDING TO PUBLICATION 408 SECTION 714

2. REINFORCING STEEL: PUBLICATION 408 SECTIONS 709.1(A)1 AND 709.1(C)

DEFORMED BILLET STEEL SHALL CONFORM TO ASTM A 615, GRADE 60. STEEL REINFORCING SHALL HAVE A MINIMUM YIELD STRENGTH OF 60,000 PSI. STEEL REINFORCING SHALL BE PLACED ACCORDING TO THE DETAILS AND PLANS SHOWN ON THE SHOP DRAWINGS. STEEL HARDWARE AND INSERTS USED BY MANUFACTURER MUST BE BULLETIN 15 OR PUBLICATION 408 APPROVED . LIFTING AND CONNECTION HARDWARE SHALL BE GALVANIZED PER ASTM A123.

3. SMOOTH WELDED WIRE FABRIC: PUBLICATION 408 SECTION 709.3.
   DEFORMED WELDED WIRE FABRIC: PUBLICATION 408 SECTION 709.4.
   WELDED WIRE FABRIC USED FOR THE CIRCUMFERENTIAL STEEL SHALL HAVE A MINIMUM SPACING OF 2 INCHES AND MAXIMUM OF 4 INCHES.
4. SELECTED BORROW EXCAVATION - STRUCTURAL BACKFILL: PUB 408 AS SHOWN ON STANDARD DRAWING RC-12. DO NOT USE METALLURGICAL SLAG OR CINDERS OR ANY 'R' CLASS ROCK.
5. GEOTEXTILES: CLASS 4, TYPE A, PUBLICATION 408 SECTION 735.
6. JOINT WRAP: PUBLICATION 408 SECTION 680
7. MORTAR: PUBLICATION 408 SECTION 705.7(A).
8. GROUT: SHALL CONTAIN PORTLAND CEMENT, SAND AND WATER AND SHALL HAVE A MINIMUM COMPRESSIVE STRENGTH OF 4000 PSI AT 28 DAYS.
9. CONCRETE SEALERS: APPROVED BY AND LISTED ON BULLETIN 15.
10. PIPE UNDERDRAIN: PUBLICATION 408 SECTION 610.2.
11. CERTIFICATION: PUBLICATION 408 SECTION 106.03(b)3.
12. CLOSED CELL NEOPRENE SPONGE: PUBLICATION 408 SECTION 1085.2

4. FABRICATION OF PRECAST ELEMENTS

FABRICATE IN ACCORDANCE WITH APPROVED SHOP DRAWINGS, APPROVED QUALITY CONTROL PLAN AND PUB. 408 SECTION 714. FORMS SHALL BE SUFFICIENTLY RIGID TO MAINTAIN STRUCTURE SHAPE. REINFORCEMENT SHALL BE BENT TO APPROXIMATELY MATCH THE OUTSIDE CORNER OF THE STRUCTURE. REINFORCEMENT SHALL BE WELDED WIRE FABRIC AND SUPPLEMENTED WITH A LAYER DEFORMED BILLET STEEL BARS WHEN NECESSARY. LONGITUDINAL REINFORCING MUST BE WITHIN 3 INCHES FROM ENDS OF PRECAST ELEMENTS.

- HANDLING AND STORAGE OF UNITS SHOULD BE IN A MANNER THAT PREVENTS ANY DAMAGE OR CRACKING AND IN A FASHION APPROVED BY THE ENGINEER
- HARDWARE OR HOLES SHALL BE CAST INTO PRECAST ELEMENTS TO FACILITATE HANDLING
- CONCRETE SHALL MEET MINIMUM DESIGN STRENGTH AT 28 DAYS AFTER CASTING AND PRIOR TO SHIPPING THE PRECAST ELEMENT
- TENSION SPLICES IN CIRCUMFERENTIAL REINFORCING SHALL BE MADE BY LAPPING AND MUST CONFORM TO AASHTO 5.11.6.2 FOR SMOOTH WELDED WIRE FABRIC. DEFORMED WELDED WIRE REINFORCEMENT SHALL CONFORM TO AASHTO 5.11.6.1. LAPS MAY BE TACK WELDED FOR CONSTRUCTION PURPOSES ONLY. FOR SPLICES OTHER THAN TENSION SPLICES, THE OVERLAP SHALL BE AT LEAST 12 INCHES FOR WELDED WIRE FABRIC OR 24" DEFORMED BARS. OVERLAP OF WELDED WIRE FABRIC SHALL BE MEASURED FROM OUTER MOST CROSS WIRES OF EACH FABRIC SHEET. OVERLAP FOR DEFORMED BARS SHALL MEET AASHTO 5.11.5.
  WELDING IS ONLY ALLOWED WITH AN APPROVED WPS PER AWS D1.4

5. QUALITY ASSURANCE

THE PRECAST PLANT SHALL BE CERTIFIED BY THE NATIONAL PRECAST CONCRETE ASSOCIATION'S PLANT CERTIFICATION PROGRAM , OR PRECAST/PRESTRESSED CONCRETE INSTITUTE PLANT CERTIFICATION DURING PRODUCTION OF ALL PRECAST ELEMENTS.

THE PRECAST PLANT SHALL PROVIDE PROOF OF COMPLIANCE OF THIS SECTION UPON REQUEST.

6. TESTING AND INSPECTION

FOLLOW PUBLICATION 408 SECTION 714.7 AND AS FOLLOWS:
COMPRESSION TESTING SHALL BE DONE ON CONCRETE CYLINDERS. A MINIMUM OF 4 CYLINDERS ARE TO BE MADE FOR EACH GROUP OF CONCRETE ELEMENTS CAST FROM THE SAME CONCRETE MIX ON THE SAME DAY LOT.

THE PRECAST PLANT SHALL PERFORM CONCRETE TESTS REQUIRED BY AND IN ACCORDANCE WITH PUBLICATION 408 SECTION 714.7 AND PUBLICATION 145.

7. TOLERANCES

BRIDGE UNITS SHALL BE MANUFACTURED SO THAT ARCH AND LEG THICKNESS DIMENSIONS ARE NOT MORE THAN $\frac{1}{4}$" DIFFERENT THAN WHAT IS SHOWN ON THE SHOP DRAWINGS. THE LAY LENGTH OF A BRIDGE SEGMENT SHALL NOT BE MORE THAN $\frac{1}{2}$" OR ANY LESS THAN THE SPECIFIED LENGTH IN ANY PRECAST CONCRETE SEGMENT .

THE INTERNAL DIMENSION SHALL NOT VARY MORE THAN $\pm\frac{1}{2}$" FROM THE DESIGN DIMENSION WHICHEVER IS LESS.

THE OUTSIDE DIAGONAL DIMENSIONS SHALL NOT VARY MORE THAN $\pm\frac{1}{2}$" FROM THE DESIGN DIMENSIONS WHICHEVER IS LESS.

WINGWALL AND HEADWALL ARE TO BE MANUFACTURED SO THAT THE LENGTH, HEIGHT AND THICKNESS DOES NOT VARY MORE THAN $\pm\frac{1}{4}$" FROM WHAT IS SHOWN ON THE SHOP DRAWINGS.

REINFORCEMENT PLACING SHALL NOT VARY MORE THAN $\frac{1}{2}$" FROM THAT WHICH IS SHOWN ON THE SHOP DRAWINGS. REINFORCING CONCRETE COVER SHALL NOT VARY MORE THAN $\frac{1}{4}$" FROM THAT WHICH IS SHOWN ON THE SHOP DRAWINGS. COVER AT THE ENDS OF REINFORCEMENT SHALL BE A MINIMUM OF 1 $\frac{1}{2}$" FOR MATING SURFACES.

OTHER TOLERANCES AS INDICATED.

8. JOINTS

BRIDGE UNITS UTILIZE BUTT ENDS AND ARE TO BE MANUFACTURED SO THAT WHEN PLACED NEXT TO EACH OTHER, THEY PROVIDE A CLEAN, CONTINUOUS LINE OF SECTIONS THAT ARE FREE OF ANY IRREGULARITIES. THE MAXIMUM PERMISSIBLE JOINT SHALL BE A MAXIMUM OF $\frac{1}{2}$"

9. WORKMANSHIP AND FINISH

PRECAST ELEMENTS ARE TO HAVE A SMOOTH STEEL FORM OR TROWEL ED SURFACE. THE ENDS OF BRIDGE UNITS SHALL BE NORMAL TO THE WALLS AND CENTERLINE OF THE ARCH. THE PRECAST ELEMENTS SHALL BE FREE OF ANY SUBSTANTIAL FRACTURE OR BLEMISH.

REPAIRS TO A PRECAST ELEMENT MAY BE MADE IN ACCORDANCE WITH PUBLICATION 145. FOR DAMAGE EXCEEDING PRE-APPROVED LIMITS, SEE PUBLICATION 408 SECTION 106.07.

10. REJECTION

PRECAST ELEMENTS MAY BE REJECTED FOR ANY OF THE FOLLOWING BUT NOT LIMITED TO:

- FRACTURES OR CRACKS PASSING THROUGH THE WALL, EXCEPT FOR A SINGLE END CRACK THAT DOES NOT EXCEED ONE HALF THE THICKNESS OF THE WALL
- DEFECTS THAT INDICATE PROPORTIONING, MIXING, AND MOLDING NOT IN COMPLIANCE WITH THE SPECIFICATION AS SPECIFIED OR INDICATED
- EXCESSIVE HONEYCOMBING OR OPEN TEXTURE
- TEST CORE STRENGTH IS LESS THAN DESIGN CONCRETE STRENGTH
- DAMAGED ENDS WHERE SUCH DAMAGE WOULD PREVENT A SATISFACTORY JOINT
- DIMENSIONS NOT CONFORMING TO THE ALLOWABLE TOLERANCES
- COLOR VARIATION ON FRONT FACE

REJECT REPAIR AREAS BEYOND SCOPE OF PUBLICATION 145. ANY REPAIRS BEYOND THE SCOPE OF PUBLICATION 145 MAY BE SUBMITTED TO THE STRUCTURAL MATERIALS SECTION ENGINEER FOR EVALUATION ON A CASE BY CASE BASIS.

MARK THE REJECTED PRECAST CONCRETE SEGMENTS "REJECTED FOR PENNDOT USE" WITH WATERPROOF PAINT.

11. MARKING

EACH PRECAST ELEMENT IS TO BE MARKED BY PERMANENT PAINT. THE MINIMUM MARKING SHALL INCLUDE THE DATE OF MANUFACTURE, TRADEMARK OR NAME OF PRECAST PLANT, AND PIECE MARK FROM SHOP DRAWINGS. BRIDGE UNITS SHALL INCLUDE SPAN , RISE, AND DESIGN EARTH COVER HEIGHT IN THE MARK.

12. CONSTRUCTION

THE BRIDGE UNITS AND WINGWALLS SHALL BE INSTALLED ON CAST IN PLACE FOUNDATIONS PER THE PLANS. THE ENGINEER SHALL VERIFY THAT THE FOUNDATION SUBGRADE IS IN COMPLIANCE WITH THE GEOTECHNICAL REPORT FOR THE PROJECT.

THE FOOTINGS SHALL HAVE A SMOOTH FLOAT FINISH WITH A MINIMUM COMPRESSIVE STRENGTH AS SPECIFIED IN THE DESIGN NOTES. THE SURFACE OF THE FOUNDATION SHALL NOT VARY BY MORE THAN $\frac{1}{4}$" WHEN MEASURED WITH A 10 FOOT STRAIGHT EDGE. THE FOOTINGS SHALL HAVE REACHED A MINIMUM OF 2500 PSI PER PUBLICATION 408 SECTION 1001, TABLE A BEFORE INSTALLATION OF ANY PRECAST ELEMENTS. FOUNDATION DIMENSION SHALL MATCH THOSE THAT ARE SHOWN ON THE PLANS.

PRECAST ELEMENTS SHALL BE INSTALLED AS SHOWN ON THE PLANS AND SPECIAL CARE SHALL BE TAKEN TO VERIFY THAT ELEMENTS ARE PLACED TO FOLLOW THE DESIGNATED CENTERLINE OF THE STRUCTURE. BRIDGE STRUCTURES ARE TO BE PLACED ON MASONITE SHIMS TO PROVIDE A MINIMUM OF $\frac{1}{2}$" CLEARANCE AND A MAXIMUM OF 2" BETWEEN BOTTOM OF PRECAST ELEMENT AND TOP OF FOOTING. GAP TO BE FILLED WITH CEMENT GROUT WITH A MINIMUM COMPRESSIVE STRENGTH OF 4,000 PSI. GROUT TO BE COMPOSED OF PORTLAND CEMENT AND WATER OR CEMENT MORTAR.

POST TENSIONING IN ACCORDANCE WITH PUBLICATION 408, SECTION 1108. ECO-SPAN MANUFACTURER TO PROVIDE POST TENSIONING LOCATION, FORCE, AND SEQUENCING ON THE SHOP DRAWINGS.

BUTT JOINTS BETWEEN BRIDGE UNITS SHALL BE COVERED WITH A $\frac{7}{8}$" X $1\frac{3}{8}$" (1" NOMINAL) BUTYL ROPE AND A 9" (MINIMUM) WIDE STRIP OF JOINT WRAP. A PRIMER COMPATIBLE WITH THE JOINT WRAP TO BE APPLIED ON EACH SIDE OF THE BUTT JOINT ON A CLEAN SURFACE. JOINT PROTECTION SHALL EXTEND FROM BOTTOM OF ONE LEG, UP OVER ARCH AND DOWN OPPOSITE LEG. ANY LAPS SHALL HAVE 6" OF OVERLAP AND HAVE OVERLAP RUNNING DOWN HILL.

LIFT HOLES ARE TO BE FILLED WITH GROUT, PRIMED AND COVERED WITH JOINT WRAP. EDGES ALONG HEADWALL COLLAR AND TOP OF BRIDGE UNIT TO BE COVERED WITH JOINT WRAP AND PRIMER. HEADWALLS THAT ARE CAST INTEGRAL WITH A BRIDGE UNIT REQUIRES NO TYPE OF JOINT PROTECTION.

COVER REAR FACE OF JOINTS BETWEEN WINGWALL SECTIONS AND BETWEEN A WINGWALL SECTION AND BRIDGE UNIT WITH A 2' WIDE STRIP OF FILTER FABRIC IN ACCORDANCE WITH BC-799M.

BACKFILL IS DEFINED AS ALL REPLACED EXCAVATION AND NEW EMBANKMENT MATERIAL THAT IS ADJACENT TO THE THREE SIDED STRUCTURE, WINGWALLS AND HEADWALLS. BACKFILL MATERIAL WITHIN STRUCTURAL BACKFILL ZONE (BACKFILL ZONE A), IS DEFINED IN FIGURE 2 ON SHEET 2 OF THESE DRAWINGS.

ALL BACKFILL IN ZONE A IS TO BE COMPACTED IN ACCORDANCE WITH PUBLICATION 408 SECTION 206.3(b).

SPECIAL CARE IS TO BE TAKEN DURING BACKFILLING TO PROTECT THE PLACEMENT OF JOINT WRAP OR ANY WATERPROOFING MATERIAL.

MECHANICAL TAMPERS OR APPROVED COMPACTING EQUIPMENT NOT EXCEEDING 1 TON SHALL BE USED ON ALL BACKFILL MATERIAL THAT IS DIRECTLY ADJACENT TO THE STRUCTURAL ELEMENTS AND OVER THE TOP OF THE STRUCTURE UNTIL THERE IS AT LEAST 1' OF COVER OVER THE TOP. BACKFILL MATERIAL IN STRUCTURAL BACKFILL ZONE SHALL BE PLACED IN 8" LIFTS (MAXIMUM) BEFORE BEING COMPACTED. AT NO TIME SHALL HEAVY CONSTRUCTION OR BACKFILLING EQUIPMENT IN EXCESS OF 8 TONS BE PERMITTED OVER THE STRUCTURE OR WITHIN 3' OF ANY STRUCTURAL ELEMENT WITHOUT AT LEAST 2' OF COVER OVER THE STRUCTURE UNLESS THE STRUCTURE IS DESIGNED FOR LESS COVER.

DURING BACKFILLING, AT NO TIME SHALL THERE BE MORE THAN 24" DIFFERENCE BETWEEN BACKFILL HEIGHT ON EACH SIDE OF THE CULVERT.

THIS DRAWING IS THE PROPERTY OF STRUCTURE SIGHT LLC, dba PRETEK GROUP. IT IS MADE FOR THE EXCLUSIVE USE OF PRETEK GROUP. NEITHER THE DRAWING OR THE REPRODUCTION OF IT NOR INFORMATION DERIVED FROM IT IS BE GIVEN TO OTHERS WITHOUT THE EXPRESSED CONSENT OF PRETEK GROUP. NO USE IS TO BE MADE OF IT WHICH IS OR MAYBE IN ANY WAY INJURIOUS TO AND/OR CONTRARY TO THE INTERESTS OF PRETEK GROUP. PRETEK GROUP MAKES NO REPRESENTATION OR WARRANTIES AS TO ANY USE OF THIS DRAWING OTHER THAN THAT OF WHICH PRETEK GROUP ORIGINALLY INTENDED.

MARK	DESCRIPTION	BY	CHK'D	RECM'D	DATE
REVISIONS					

PENNDOT DRAWING # 2014-115

COMMONWEALTH OF PENNSYLVANIA
DEPARTMENT OF TRANSPORTATION
BUREAU OF PROJECT DELIVERY

ECO-SPAN®
PRECAST ARCH-BOX SYSTEM
STANDARD DETAIL DRAWINGS

8 / 7 / 2018

PENNSYLVANIA
DEPARTMENT OF TRANSPORTATION
RECOMMENDED
Thomas P Macioce
CHIEF BRIDGE ENGINEER

I CERTIFY THAT ALL DESIGN ASSUMPTIONS HAVE BEEN VALIDATED EITHER THROUGH CONSTRUCTION DETAILS, SPECIAL NOTES AND/ OR INSTRUCTIONS TO THE FABRICATOR, ERECTOR AND CONTRACTOR.

COMMONWEALTH OF PENNSYLVANIA
REGISTERED PROFESSIONAL
JEFFREY J. VON HANDORF
ENGINEER
08-06-2018

DESIGNER

PRETEK GROUP
PO BOX 751471
DAYTON, OHIO 45475
800.241.0925
CERTIFIED BY: JEFFREY J. VON HANDORF
PENNSYLVANIA PE 076224

PROJECT NUMBER:	PADOT DWG
DATE:	08/06/2018
DESIGNED BY:	TEN
DRAWN BY:	JJC
CHECKED BY:	JJV

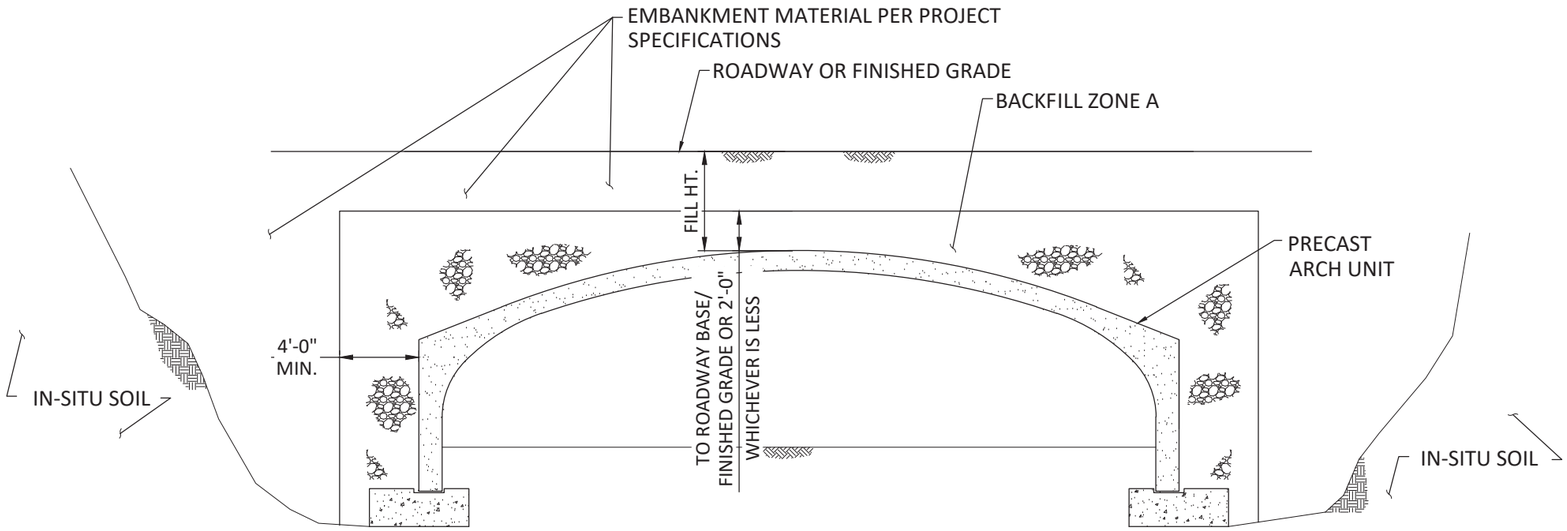

FIGURE 2 -PRECAST ARCH BACKFILL LIMITS

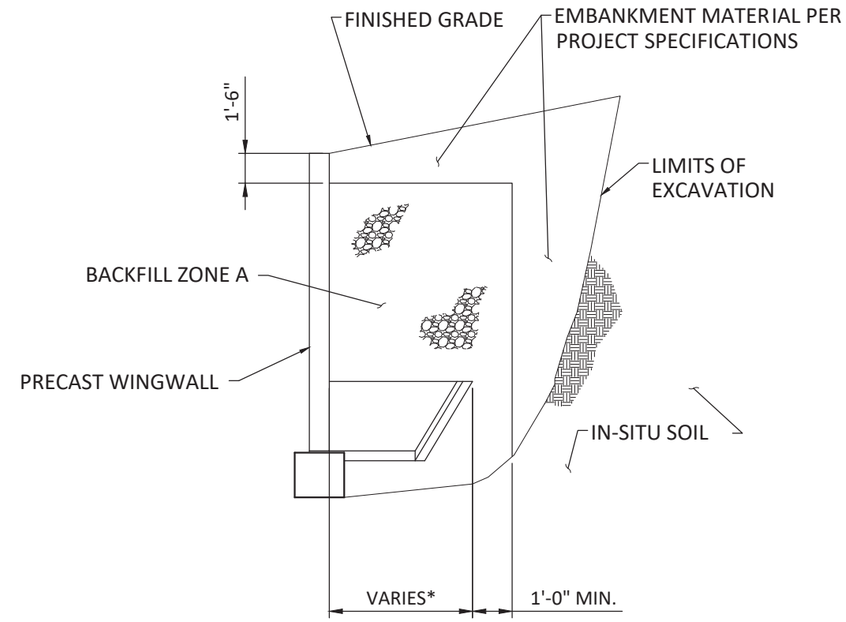

FIGURE 1 - WINGWALL BACKFILL LIMITS

*SEE SHEET 13 TO 15

GENERAL NOTES:

1. PROVIDE CONCRETE COVER ON REINFORCING BARS AS NOTED HEREIN.
2. CHAMFER EXPOSED CONCRETE EDGES $\frac{3}{4}$" x $\frac{3}{4}$" EXCEPT AS NOTED.
3. FOR FOUNDATION REINFORCEMENT STEEL MEETING THE REQUIREMENTS OF ASTM A615, GRADE 60 AS SET FORTH IN PUBLICATION 408.
4. PROVIDE REINFORCEMENT STEEL LAP SPLICE LENGTHS AND EMBEDMENT LENGTHS OF 30 BAR DIAMETERS OR IN ACCORDANCE WITH BC-736M OR AASHTO SPECIFICATION, WHICHEVER IS GREATER.
5. PROVIDE MINIMUM FILL HEIGHT OF 1'-3" (12'-0" TO 48'-0" SPANS) AND MINIMUM FILL HEIGHT OF 2'-6" (54'-0" AND 60'-0" SPANS) FROM TOP OF PRECAST SEGMENT CROWN TO TOP OF FINISHED GRADE.
6. FOR ALTERNATE DESIGN PROJECTS, FOOTINGS WILL BE DESIGNED BY CONTRACTOR, AND PRECAST STRUCTURE SYSTEM (INCLUDING WINGWALLS AND HEADWALLS, IF SPECIFIED) WILL BE DESIGNED BY THE ECO-SPAN MANUFACTURER.
7. FOR AS-DESIGNED PROJECTS, FOOTINGS WILL BE DESIGNED BY DESIGNERS OR CONSULTANTS, AND PRECAST STRUCTURE SYSTEM (INCLUDING WINGWALLS AND HEADWALLS, IF SPECIFIED) WILL BE DESIGNED BY THE ECO-SPAN MANUFACTURER.
8. DESIGN LOADS FOR THE FOOTING DESIGN WILL BE PROVIDED BY THE ECO-SPAN MANUFACTURER.
9. NOTIFY ALL INVOLVED UTILITY COMPANIES PRIOR TO START OF WORK. UTILITIES WILL NOT BE DISTURBED OR ENDANGERED DURING CONSTRUCTION OPERATIONS.
10. WHERE COVER IS LESS THAN OR EQUAL TO 2'-0", CONTRACTOR SHALL PROVIDE FULL WATERPROOFING MEMBRANE AS BC-788M STANDARD DRAWING.
11. REFER TO SHEET 6 OF 15 FOR TYPICAL POST-TENSIONING REQUIREMENTS AND DETAILS. ALL ARCH-BOX CONNECTIONS SHALL BE PERFORMED PRIOR TO PLACEMENT OF GROUT BETWEEN THE ARCH-BOX LEGS AND THE FOOTING.

MARK	DESCRIPTION	BY	CHK'D	RECM'D	DATE
REVISIONS					

PENNDOT DRAWING # 2014-115

COMMONWEALTH OF PENNSYLVANIA
DEPARTMENT OF TRANSPORTATION
BUREAU OF PROJECT DELIVERY

ECO-SPAN®

PRECAST ARCH-BOX SYSTEM

STANDARD DETAIL DRAWINGS

8 / 7 / 2018

COMMONWEALTH OF PENNSYLVANIA REGISTERED PROFESSIONAL JEFFREY J. VON HANDORF ENGINEER No. 076224
08-06-2018

DESIGNER		
PRETEK GROUP PO BOX 751471 DAYTON, OHIO 45475 800.241.0925 CERTIFIED BY: JEFFREY J. VON HANDORF PENNSYLVANIA PE 076224	PROJECT NUMBER:	PADOT DWG
	DATE:	08/06/2018
	DESIGNED BY:	TEN
	DRAWN BY:	JJC
	CHECKED BY:	JJV

SHT. 2 OF 16

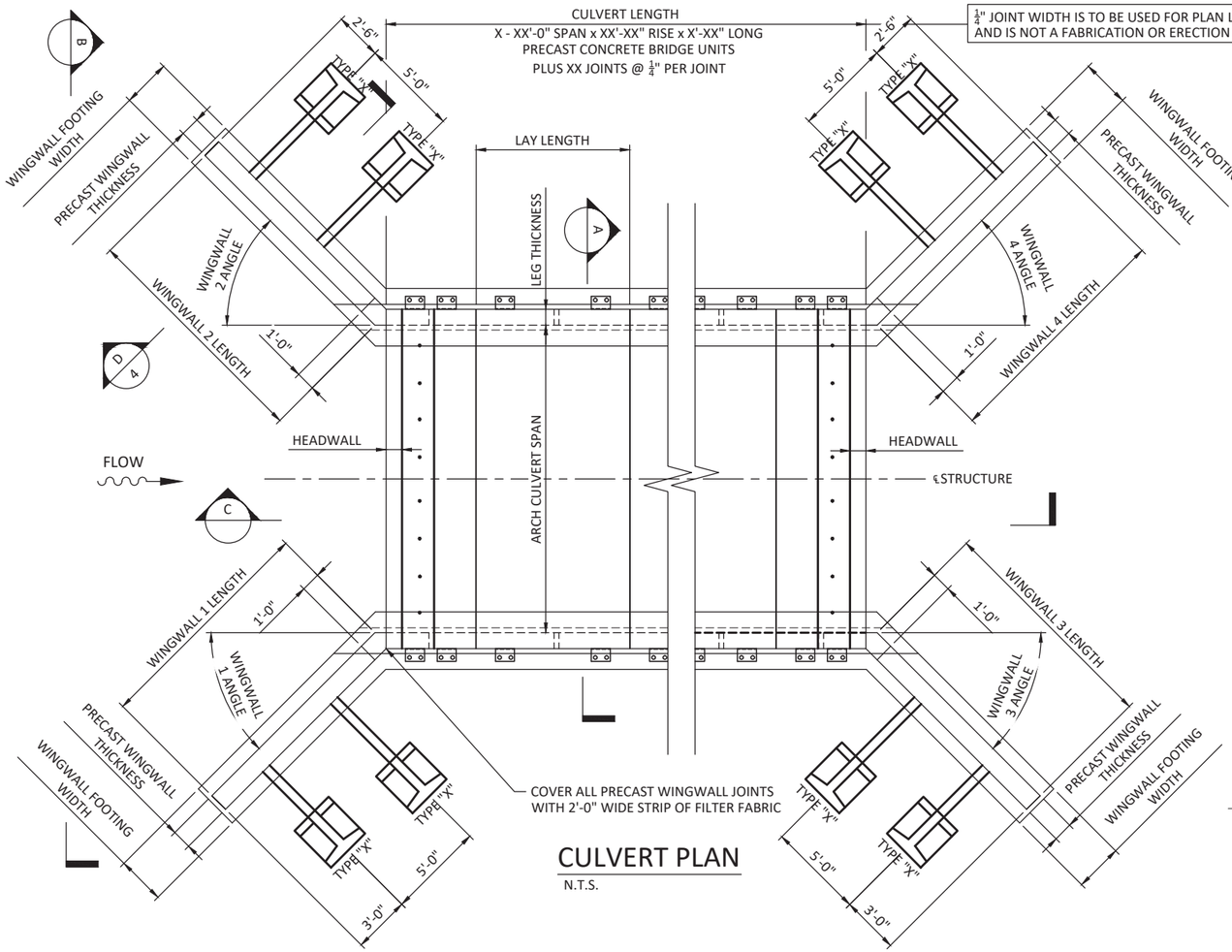

CULVERT PLAN

N.T.S.

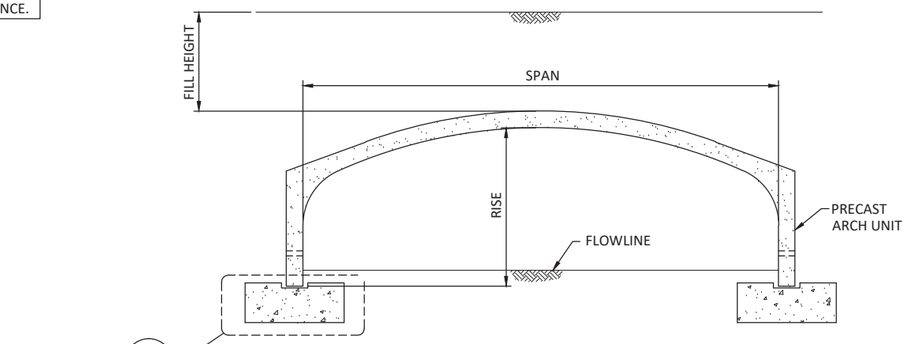

DETAIL 1/5

7 DETAILS

SECTION A

BRIDGE UNIT SECTION N.T.S.

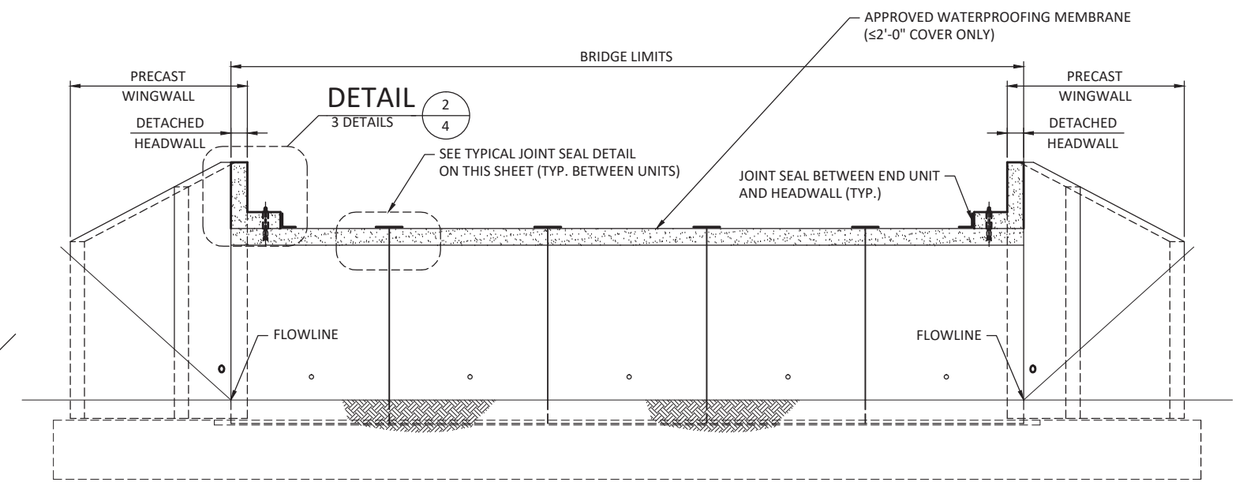

SECTION C

BRIDGE CROSS SECTION N.T.S.

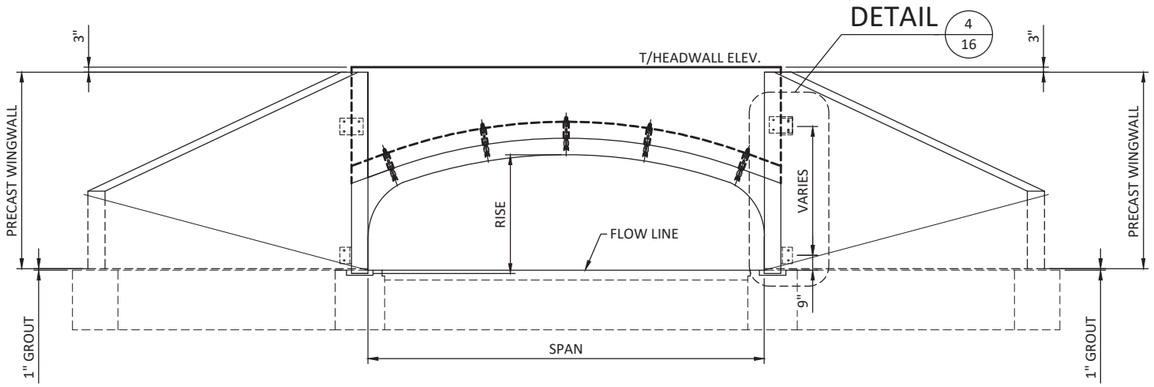

SECTION B

END ELEVATION N.T.S.

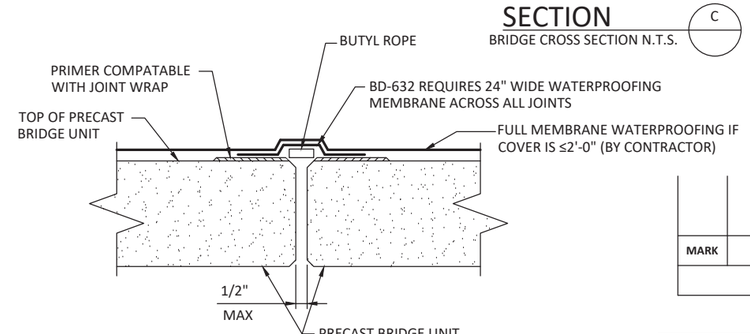

BRIDGE JOINT SEAL DETAIL

N.T.S.

MARK	DESCRIPTION	BY	CHK'D	RECM'D	DATE

REVISIONS

PENNDOT DRAWING # 2014-115

COMMONWEALTH OF PENNSYLVANIA
DEPARTMENT OF TRANSPORTATION
BUREAU OF PROJECT DELIVERY

ECO-SPAN®

PRECAST ARCH-BOX SYSTEM

STANDARD DETAIL DRAWINGS

8 / 7 / 2018

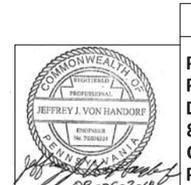

DESIGNER

PRETEK GROUP
PO BOX 751471
DAYTON, OHIO 45475
800.241.0925
CERTIFIED BY: JEFFREY J. VON HANDORF
PENNSYLVANIA PE 076224

PROJECT NUMBER:	PADOT DWG
DATE:	08/06/2018
DESIGNED BY:	TEN
DRAWN BY:	JJC
CHECKED BY:	JJV

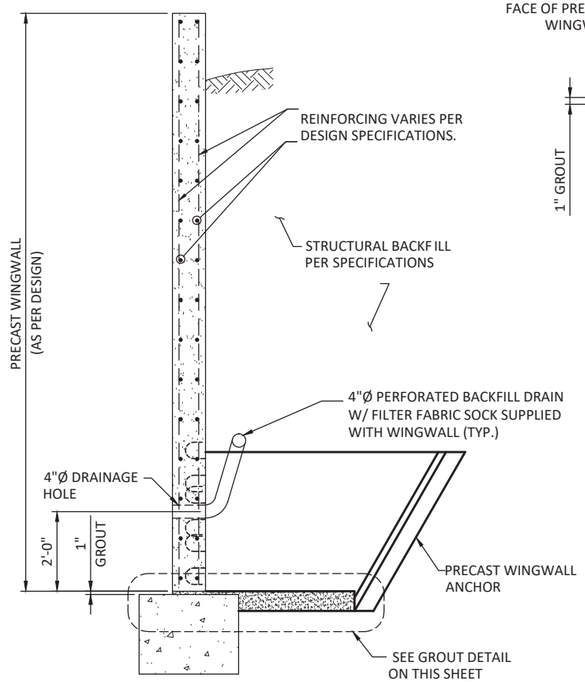

SECTION

WINGWALL SECTION N.T.S. (D / 3)

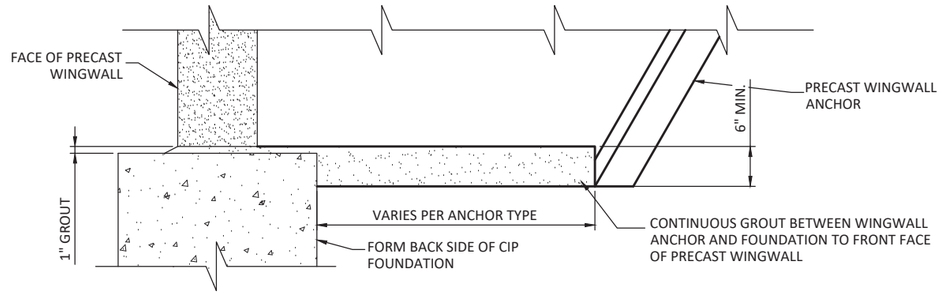

WINGWALL GROUT DETAIL

NOTES:

1. CONTERFORT DESIGN IS REQUIRED FOR HEADWALL HEIGHTS OVER 8'-0".
2. A MINIMUM OF 3 COUNTERFORTS IS REQUIRED FOR EACH SEGMENT OF PRECAST HEADWALL.
3. THE ACTUAL NUMBER AND TYPE OF HEADWALL COUNTERFORTS IS TO BE DETERMINED BY ECO-SPAN MANUFACTURER.
4. ALL HEADWALL REINFORCING AND CONNECTION DETAILS SHALL BE DETERMINED BY PROJECT SPECIFIC DESIGN. AT A MINIMUM, REINFORCING DETAILS SHALL MATCH BD STANDARDS.
5. HEADWALL REINFORCING SHALL BE EPOXY COATED
6. CAST IN PLACE HEADWALLS REQUIRE EPOXY BONDING COMPOUND BULLETIN 15 APPROVED MATERIAL BETWEEN THE TOP OF THE ARCH AND CAST-IN-PLACE HEADWALL.

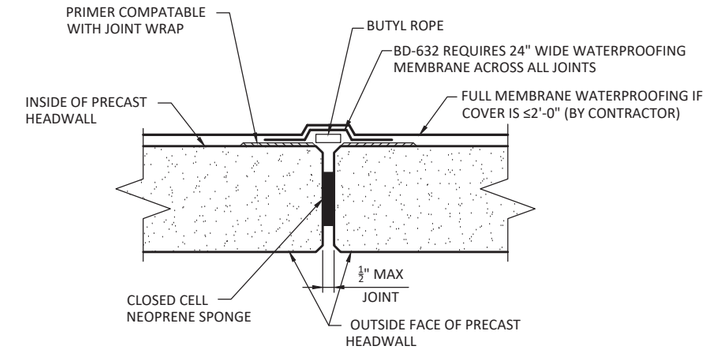

HEADWALL JOINT SEAL DETAIL

N.T.S.

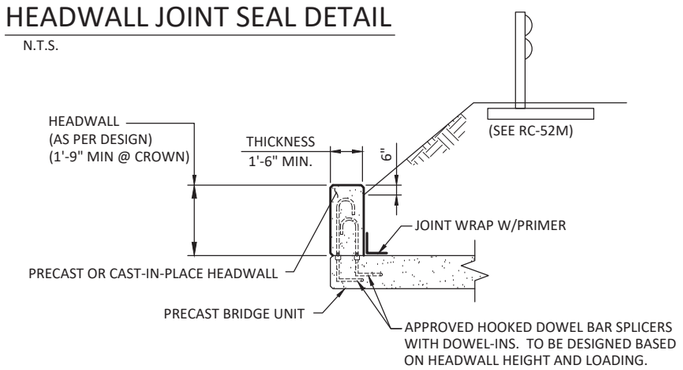

TYPICAL ATTACHED HEADWALL DETAIL

WITHOUT BARRIER N.T.S. (2 / 3)

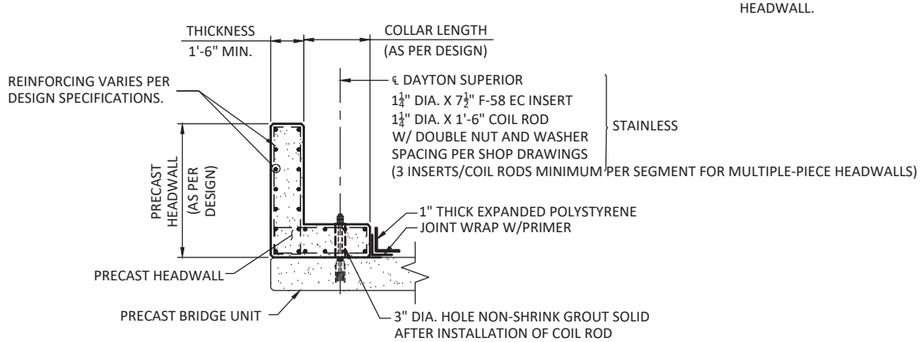

TYPICAL DETACHED HEADWALL DETAIL

WITHOUT BARRIER N.T.S. (2 / 3)

NOTE:
END ARCH-BOX SEGMENTS SHALL BE DESIGNED AS EDGE BEAMS AND STABILITY SHALL BE CHECKED BY ECO-SPAN.

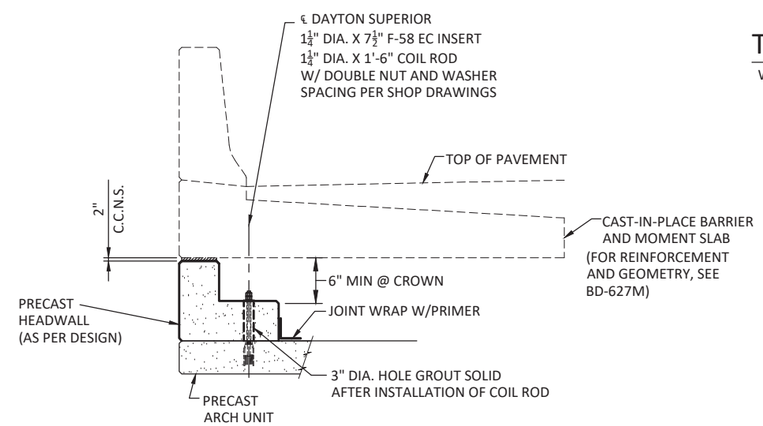

TYPICAL DETACHED HEADWALL DETAIL

WITH BARRIER AND MOMENT SLAB/ASPHALT SHOULDERS N.T.S. (2 / 3)

MARK	DESCRIPTION	BY	CHK'D	RECM'D	DATE
REVISIONS					

PENNDOT DRAWING # 2014-115

COMMONWEALTH OF PENNSYLVANIA
DEPARTMENT OF TRANSPORTATION
BUREAU OF PROJECT DELIVERY

ECO-SPAN®

PRECAST ARCH-BOX SYSTEM

STANDARD DETAIL DRAWINGS

8 / 7 / 2018

COMMONWEALTH OF PENNSYLVANIA
REGISTERED PROFESSIONAL
JEFFREY J. VON HANDORF
ENGINEER
No. 076224
08-06-2018

DESIGNER

PRETEK GROUP
PO BOX 751471
DAYTON, OHIO 45475
800.241.0925
CERTIFIED BY: JEFFREY J. VON HANDORF
PENNSYLVANIA PE 076224

PROJECT NUMBER:	PADOT DWG
DATE:	08/06/2018
DESIGNED BY:	TEN
DRAWN BY:	JJC
CHECKED BY:	JJV

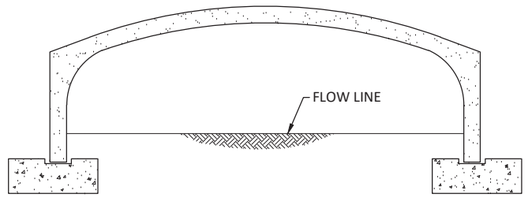

DETAIL 1/3
STRIP FOUNDATION N.T.S.

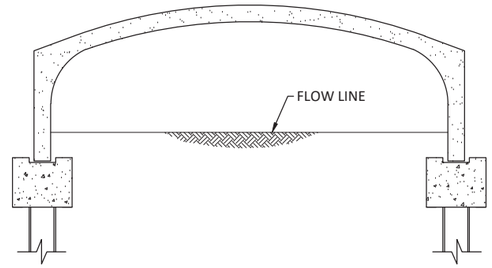

DETAIL 1/3
DEEP FOUNDATION
(PILE/CAISSON)N.T.S.

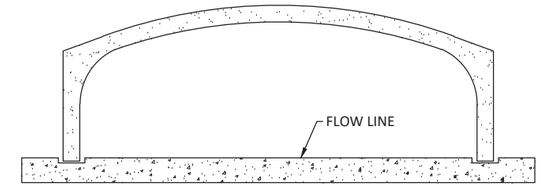

DETAIL 1/3
STRUCTURAL BASE
SLAB FOUNDATION N.T.S.

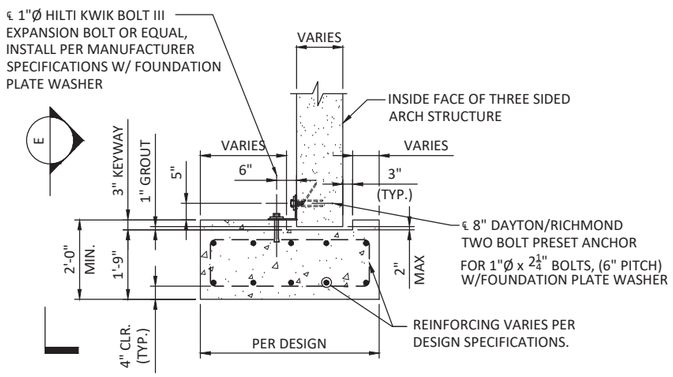

DETAIL 1/3
N.T.S.

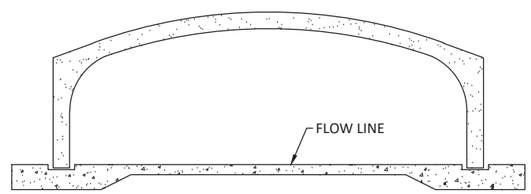

DETAIL 1/3
STRIP FOUNDATION
W/PAVED INVERT N.T.S.

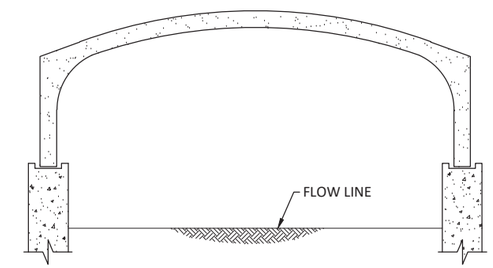

DETAIL 1/3
PEDESTAL FOUNDATION
N.T.S.

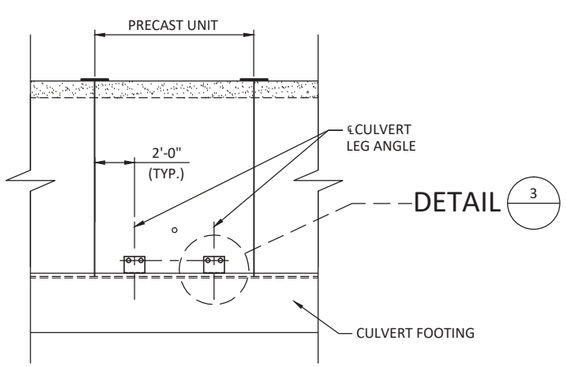

SECTION E
CULVERT SIDE N.T.S.

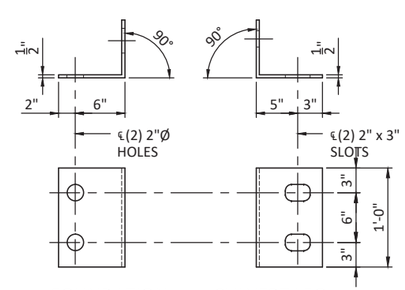

DETAIL 3
FND CONN. PLATE N.T.S.

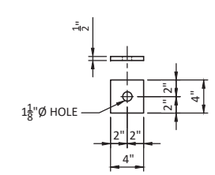

FOUNDATION PLATE WASHER

MARK	DESCRIPTION	BY	CHK'D	RECM'D	DATE
	REVISIONS				

PENNDOT DRAWING # 2014-115

COMMONWEALTH OF PENNSYLVANIA
DEPARTMENT OF TRANSPORTATION
BUREAU OF PROJECT DELIVERY

ECO-SPAN®

PRECAST ARCH-BOX SYSTEM

STANDARD DETAIL DRAWINGS

8 / 7 / 2018

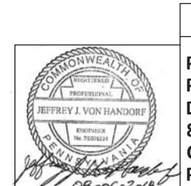

DESIGNER

PRETEK GROUP
PO BOX 751471
DAYTON, OHIO 45475
800.241.0925
CERTIFIED BY: JEFFREY J. VON HANDORF
PENNSYLVANIA PE 076224

PROJECT NUMBER:	PADOT DWG
DATE:	08/06/2018
DESIGNED BY:	TEN
DRAWN BY:	JJC
CHECKED BY:	JJV

Arch-Box (AB) Series												
SPAN	12'-0"	14'-0"	16'-0"	20'-0"	24'-0"	28'-0"	32'-0"	36'-0"	42'-0"	48'-0"	54'-0"	60'-0"
MAIN ARC LENGTH, a	13'-7 1/4"	15'-7 1/4"	18'-0 1/2"	18'-0 1/2"	18'-0 1/2"	30'-8 1/2"	30'-8 1/2"	30'-8 1/2"	30'-8 1/2"	45'-7"	58'-3 3/8"	58'-3 3/8"
MAIN ARC RADIUS, R1	15'-0"	15'-0"	25'-0"	25'-0"	25'-0"	40'-0"	40'-0"	40'-0"	40'-0"	55'-0"	70'-0"	70'-0"
FLAT CORNER LENGTH, b	0'-0"	0'-0"	0'-0"	2'-1 5/8"	4'-3 1/8"	0'-0"	2'-1 7/8"	4'-5 3/4"	7'-8 1/2"	3'-5 3/8"	0'-0"	3'-5 3/8"
ARCH DROP, c	1'-5 7/8"	1'-5 7/8"	2'-9 5/8"	2'-8 1/8"	3'-0 1/8"	2'-10 1/8"	3'-7 5/8"	4'-5 3/4"	5'-8"	5'-11 1/4"	5'-10 5/8"	7'-3 1/8"
CORNER TO SPRINGLINE, d	2'-2 1/4"	2'-2 1/4"	1'-6 3/4"	2'-3 1/2"	2'-9"	3'-9 1/8"	3'-10 5/8"	3'-10 7/8"	4'-3 3/4"	4'-1 1/2"	4'-11 1/4"	4'-8 1/2"
SECOND ARC LENGTH, e	3'-2 5/8"	3'-2 5/8"	3'-5 3/8"	3'-5 3/8"	3'-5 3/8"	4'-6 7/8"	4'-6 7/8"	4'-6 7/8"	4'-6 3/4"	5'-9 7/8"	3'-2 1/4"	3'-2 1/4"
SECOND ARC RADIUS, R2	2'-6"	2'-6"	3'-0"	3'-0"	3'-0"	10'-0"	10'-0"	10'-0"	10'-0"	27'-6 7/8"	25'-8 1/4"	25'-8 1/4"
SECOND ARC START POINT, f	1'-10 5/8"	1'-10 5/8"	1'-9 1/4"	1'-9 1/4"	1'-9 1/4"	5'-2 3/4"	5'-1 1/2"	5'-0"	4'-9 1/4"	7'-11"	6'-6 3/8"	6'-7 3/4"
THIRD ARC LENGTH, g	-	-	-	-	-	3'-1 5/8"	3'-1 5/8"	3'-1 5/8"	3'-1 3/4"	5'-3 3/4"	6'-10 3/4"	6'-10 7/8"
THIRD ARC RADIUS, R3	-	-	-	-	-	4'-0"	4'-0"	4'-0"	4'-0"	5'-0"	6'-0"	6'-0"
THIRD ARC START POINT, h	-	-	-	-	-	1'-1 7/8"	1'-1 7/8"	1'-1 7/8"	1'-1 7/8"	2'-7"	3'-6 5/8"	3'-6 5/8"
ARCH THICKNESS, k	8''	8''	10''	10''	10''	10''	1'-0"	1'-0"	1'-0"	1'-0"	1'-2"	1'-2"
LEG THICKNESS, m	8''	8''	10''	10''	10''	1'-0"'	1'-0"	1'-2"	1'-2"	1'-4"	1'-4"	1'-6"
MAXIMUM LAY LENGTH	8'-0"	8'-0"	8'-0"	8'-0"	8'-0"	6'-0"	6'-0"	6'-0"	6'-0"	4'-0"	4'-0"	4'-0"
MAXIMUM FILL HEIGHT*	40'-0"	30'-0"	40'-0"	35'-0"	25'-0"	15'-0"	15'-0"	12'-0"	12'-0"	10'-0"	10'-0"	10'-0"

NOTE: 12'-0" - 24'-0" SPAN GEOMETRY USES ONLY 2 ARCS.

*MAXIMUM FILL HEIGHT IN CHART IS A GENERAL GUIDELINE. CONTACT ECO-SPAN FOR FILL HEIGHTS BEYOND THOSE SHOWN IN CHART

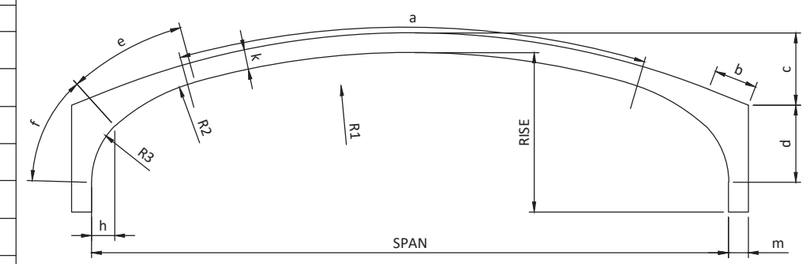

AB SERIES PRECAST UNIT GEOMETRY

DESIGN NOTES

1. THIS STRUCTURE IS DESIGNED IN ACCORDANCE WITH THE AMERICAN ASSOCIATION OF STATE HIGHWAY AND TRANSPORTATION OFFICIALS LRFD BRIDGE DESIGN SPECIFICATIONS, 7TH EDITION AND AS SUPPLEMENTED BY THE PADOT DESIGN MANUAL, PART 4 (DM 4)

2. MANUFACTURER SHALL PROVIDE STRUCTURAL DESIGN CALCULATIONS SIGNED AND SEALED BY A PROFESSIONAL ENGINEER LICENSED IN THE STATE OF PENNSYLVANIA WITH SHOP DRAWINGS FOR EACH PROJECT. THE STRUCTURAL DESIGN CALCULATIONS SHALL BE APPROVED BY THE PENNSYLVANIA DEPARTMENT OF TRANSPORTATION AND THE SHOP DRAWINGS SHALL BE ACCEPTED BY PENNSYLVANIA DEPARTMENT OF TRANSPORTATION PRIOR TO FABRICATION.

3. MATERIALS AND WORKMANSHIP SHALL BE IN ACCORDANCE WITH PENNSYLVANIA DEPARTMENT OF TRANSPORTATION PUBLICATION 408, AND THE CONTRACT SPECIAL PROVISIONS.

4. THE MANUFACTURER SHALL PROVIDE THE COMPLETED LOAD RATING TABLE AS SHOWN IN THE RIGHT EXAMPLE BOX AT THE TIME OF SHOP DRAWING SUBMITTAL.

SPAN NO.		BEAM TYPE AND SIZE					
		H 20	HS20	ML-80	TK-527	PHL-93	P-82
INVENTORY RATING (IR)	DISTRIBUTION FACTOR						
	LOCATION						
	LIMIT STATE						
	RATING FACTOR						
OPERATING RATING (OR)	DISTRIBUTION FACTOR						
	LOCATION						
	LIMIT STATE						
	RATING FACTOR						

CRITICAL MEMBER

MAXIMUM FACTOR

LOCATION

MAXIMUM FACTORED SHEAR RESISTANCE (KIPS)

LOCATION

NOTES: "M","S" AND "SM" DENOTE THAT MOMENT, SHEAR AND SHEAR/MOMENT INTERACTION CONTROL THE RATING FACTOR, RESPECTIVELY.

GIVEN DISTRIBUTION FACTOR IS THE VEHICULAR LOAD DISTRIBUTION FACTOR USED TO PRODUCE THE GIVEN RATING. FOR THE STR-IP LIMIT STATE, THE VEHICULAR LIVE LOAD DISTRIBUTION FACTOR ACCOUNT FOR THE PRESENCE OF PEDESTRIAN LOADS, IF APPLICABLE.

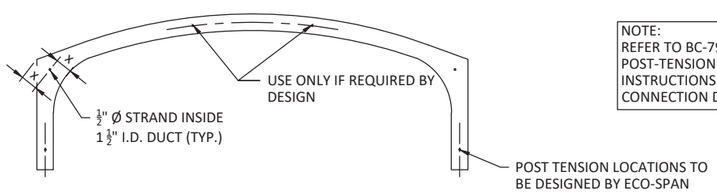

NOTE:
REFER TO BC-798M FOR POST-TENSIONING INSTRUCTIONS AND CONNECTION DETAILS

TYPICAL POST-TENSIONING STRAND LOCATIONS

POST TENSIONING IS REQUIRED FOR ECO-SPAN ON NHS.
POST TENSIONING IS REQUIRED FOR ECO-SPAN ON NON-NHS SYSTEMS UNDER FILL LESS THAT 2 FEET.
POST TENSIONING REQUIREMENT FOR ECO-SPAN ON NON-NHS SYSTEMS UNDER FILL GREATER THAN AND EQUAL TO 2 FEET IS AT THE DIRECTION OF THE DISTRICT BRIDGE ENGINEER.

MARK	DESCRIPTION	BY	CHK'D	RECM'D	DATE
	REVISIONS				

PENNDOT DRAWING # 2014-115

COMMONWEALTH OF PENNSYLVANIA
DEPARTMENT OF TRANSPORTATION
BUREAU OF PROJECT DELIVERY

ECO-SPAN®
PRECAST ARCH-BOX SYSTEM
STANDARD DETAIL DRAWINGS

8 / 7 / 2018

COMMONWEALTH OF PENNSYLVANIA REGISTERED PROFESSIONAL JEFFREY J. VON HANDORF ENGINEER No. 076224
08-06-2018

DESIGNER

PRETEK GROUP
PO BOX 751471
DAYTON, OHIO 45475
800.241.0925
CERTIFIED BY: JEFFREY J. VON HANDORF
PENNSYLVANIA PE 076224

PROJECT NUMBER:	PADOT DWG
DATE:	08/06/2018
DESIGNED BY:	TEN
DRAWN BY:	JJC
CHECKED BY:	JJV

SHT. 6 OF 16

ARCH-BOX (AB) SERIES

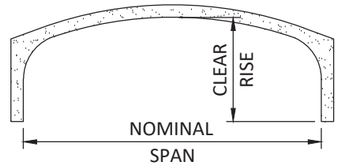

NOMINAL BRIDGE UNIT LENGTH:

12' - 24' SPANS: 8'-0"

28' - 42' SPANS: 6'-0"

48' - 60' SPANS: 4'-0"

WATERWAY AREA (SF)	NOMINAL SPAN											
CLEAR RISE	12'-0"	14'-0"	16'-0"	20'-0"	24'-0"	28'-0"	32'-0"	36'-0"	42'-0"	48'-0"	54'-0"	60'-0"
4'-0"	42	50	55	65	72							
5'-0"	54	64	71	85	95	111						
6'-0"	66	78	87	105	119	138	153					
7'-0"	78	92	103	125	143	167	184	197				
8'-0"	90	106	119	145	167	195	216	232	250			
9'-0"	102	120	135	165	191	223	248	268	292	340		
10'-0"	114	134	151	185	215	251	280	304	333	387	437	
11'-0"	126	148	167	205	239	279	315	340	375	435	491	
12'-0"	138	162	183	225	263	307	344	376	417	483	545	575
13'-0"	150	176	199	245	287	335	376	412	460	531	599	635
14'-0"	162	190	215	265	311	363	408	448	501	579	653	695
15'-0"	174	204	231	285	335	391	440	484	544	627	707	755

MAXIMUM SKEW			
SPAN	L_L MAX.	MAX. SKEW	L_S MIN.
12'-0"	7'-9"	23.3°	2'-0"
14'-0"	7'-9"	20.6°	2'-0"
16'-0"	7'-9"	18.0°	2'-0"
20'-0"	7'-9"	14.9°	2'-0"
24'-0"	7'-9"	12.6°	2'-0"
28'-0"	5'-9"	7.1°	2'-0"
32'-0"	5'-9"	6.3°	2'-0"
36'-0"	5'-9"	5.6°	2'-0"
42'-0"	5'-9"	4.8°	2'-0"
48'-0"	3'-9"	1.4°	2'-6"
54'-0"	N/A	N/A	N/A
60'-0"	N/A	N/A	N/A

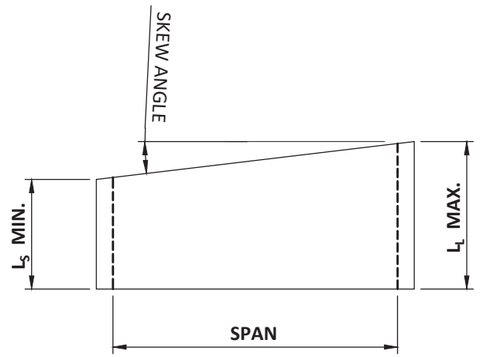

SKEWED UNIT PLAN

N.T.S.

MARK	DESCRIPTION	BY	CHK'D	RECM'D	DATE

REVISIONS

PENNDOT DRAWING # 2014-115

COMMONWEALTH OF PENNSYLVANIA
DEPARTMENT OF TRANSPORTATION
BUREAU OF PROJECT DELIVERY

ECO-SPAN®

PRECAST ARCH-BOX SYSTEM

STANDARD DETAIL DRAWINGS

8 / 7 / 2018

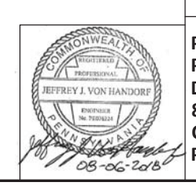

DESIGNER

PRETEK GROUP
PO BOX 751471
DAYTON, OHIO 45475
800.241.0925
CERTIFIED BY: JEFFREY J. VON HANDORF
PENNSYLVANIA PE 076224

PROJECT NUMBER:	PADOT DWG
DATE:	08/06/2018
DESIGNED BY:	TEN
DRAWN BY:	JJC
CHECKED BY:	JJV

SHT. 7 OF 16

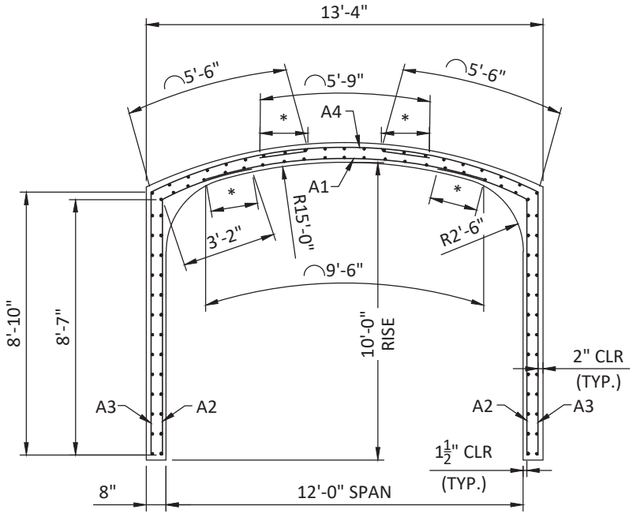

12' SPAN

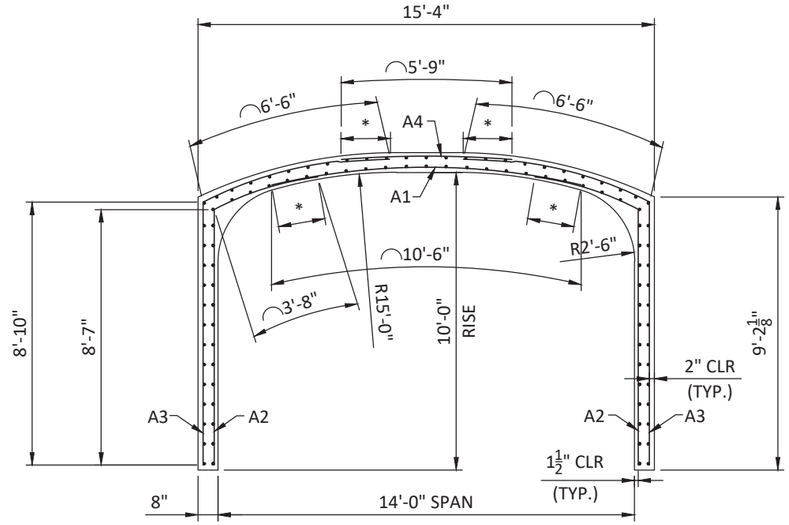

14' SPAN

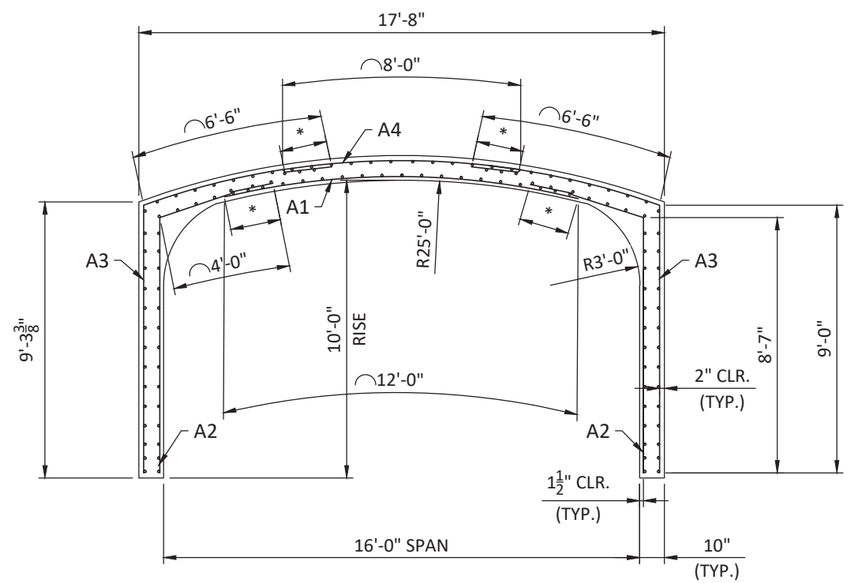

16' SPAN

NOTES

* SEE GENERAL NOTES ON SHEET 2 FOR MINIMUM OVERLAP LENGTHS.
** SEE SHEET 12 FOR A1 AND A3 STEEL AREAS.

1. ALL REINFORCING DIMENSIONS SHOWN ARE FOR 10'-0" RISE UNO. REVISE A2 AND A3 LENGTHS ACCORDINGLY BASED ON THE CHANGE IN RISE.
2. THESE STEEL AREAS ARE SHOWN FOR COVER OF 12' OR LESS. ECO-SPAN SHALL PERFORM SPECIAL DESIGNS FOR COVER GREATER THAN 12'.

DESIGN DATA

3. F'_C = AS DETERMINED BY DESIGN WITH 5,000 PSI MINIMUM FOR CONCRETE
4. F'_Y = 60,000 PSI FOR STEEL REINFORCING BARS
5. F'_Y = 65,000 PSI FOR WELDED WIRE FABRIC

⌒ = **LENGTH ALONG ARCH**

12' SPAN (10' RISE)				14' SPAN (10' RISE)				16' SPAN (10' RISE)			
ZONE	CIR. AREA	LONG. AREA	LENGTH	ZONE	CIR. AREA	LONG. AREA	LENGTH	ZONE	CIR. AREA	LONG. AREA	LENGTH
A1	**	0.13 IN²/FT	9'-6"	A1	**	0.13 IN²/FT	10'-6"	A1	**	0.13 IN²/FT	12'-0"
A2	0.24 IN²/FT	0.13 IN²/FT	11'-9"	A2	0.24 IN²/FT	0.13 IN²/FT	12'-3"	A2	0.24 IN²/FT	0.13 IN²/FT	12'-7"
A3	**	0.13 IN²/FT	14'-4"	A3	**	0.13 IN²/FT	15'-4"	A3	**	0.13 IN²/FT	15'-6"
A4	0.24 IN²/FT	0.13 IN²/FT	5'-9"	A4	0.24 IN²/FT	0.13 IN²/FT	5'-9"	A4	0.24 IN²/FT	0.13 IN²/FT	8'-0"

MARK	DESCRIPTION	BY	CHK'D	RECM'D	DATE
REVISIONS					

PENNDOT DRAWING # 2014-115

COMMONWEALTH OF PENNSYLVANIA
DEPARTMENT OF TRANSPORTATION
BUREAU OF PROJECT DELIVERY

ECO-SPAN®

PRECAST ARCH-BOX SYSTEM

STANDARD DETAIL DRAWINGS

8 / 7 / 2018

COMMONWEALTH OF PENNSYLVANIA REGISTERED PROFESSIONAL JEFFREY J. VON HANDORF ENGINEER No. 076224
08-06-2018

DESIGNER

PRETEK GROUP
PO BOX 751471
DAYTON, OHIO 45475
800.241.0925
CERTIFIED BY: JEFFREY J. VON HANDORF
PENNSYLVANIA PE 076224

PROJECT NUMBER:	PADOT DWG
DATE:	08/06/2018
DESIGNED BY:	TEN
DRAWN BY:	JJC
CHECKED BY:	JJV

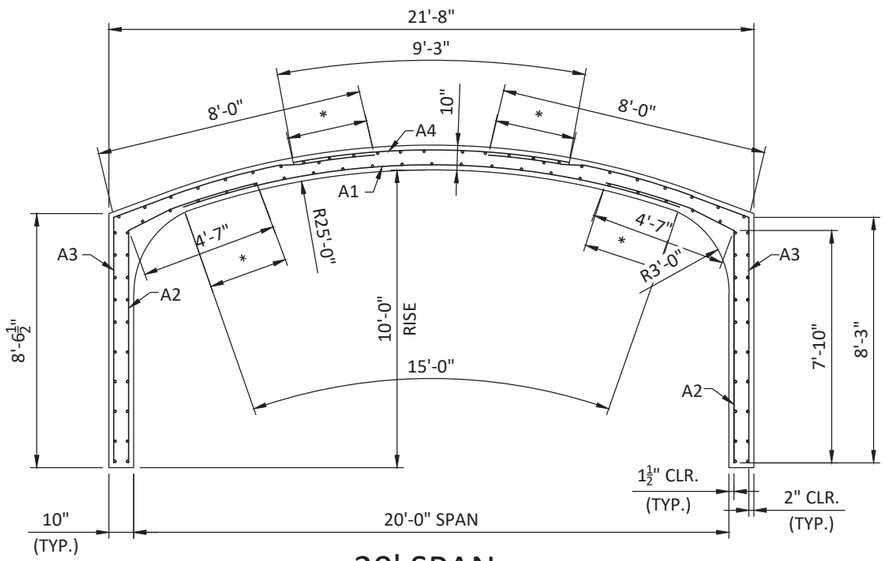

20' SPAN

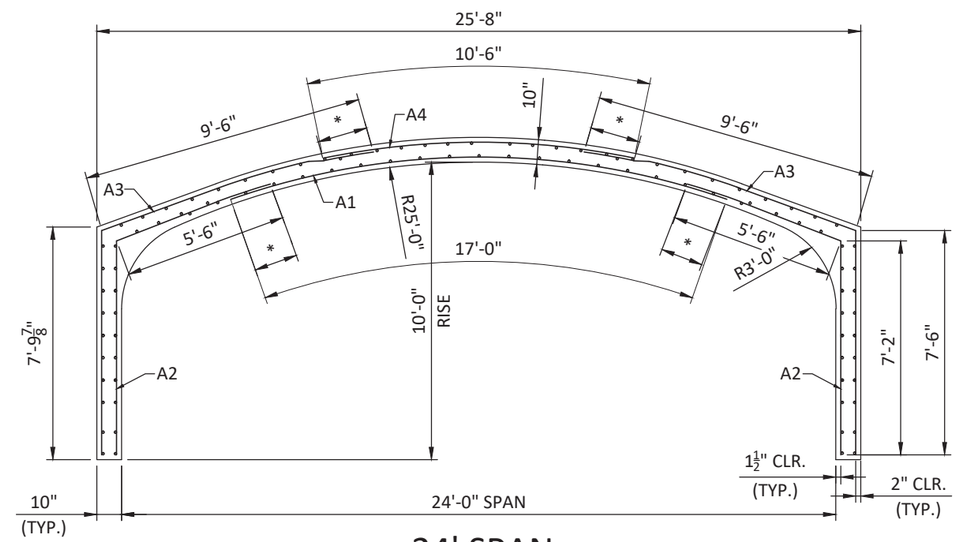

24' SPAN

NOTES

* SEE GENERAL NOTES ON SHEET 2 FOR MINIMUM OVERLAP LENGTHS.
** SEE SHEET 12 FOR A1 AND A3 STEEL AREAS.

1. ALL REINFORCING DIMENSIONS SHOWN ARE FOR 10'-0" RISE UNO. REVISE A2 AND A3 LENGTHS ACCORDINGLY BASED ON THE CHANGE IN RISE.
2. THESE STEEL AREAS ARE SHOWN FOR COVER OF 12' OR LESS. ECO-SPAN SHALL PERFORM SPECIAL DESIGNS FOR COVER GREATER THAN 12'.

DESIGN DATA

3. F'_C = AS DETERMINED BY DESIGN WITH 6,000 PSI MINIMUM FOR CONCRETE
4. F'_Y = 60,000 PSI FOR STEEL REINFORCING BARS
5. F'_Y = 65,000 PSI FOR WELDED WIRE FABRIC

⌒ = **LENGTH ALONG ARCH**

20' SPAN (10' RISE)				24' SPAN (10' RISE)			
ZONE	CIR. AREA	LONG. AREA	LENGTH	ZONE	CIR. AREA	LONG. AREA	LENGTH
A1	**	0.13 IN^2/FT	15'-0"	A1	**	0.13 IN^2/FT	17'-0"
A2	0.24 IN^2/FT	0.13 IN^2/FT	12'-5"	A2	0.24 IN^2/FT	0.13 IN^2/FT	12'-8"
A3	**	0.13 IN^2/FT	16'-3"	A3	**	0.13 IN^2/FT	17'-0"
A4	0.24 IN^2/FT	0.13 IN^2/FT	9'-3"	A4	0.24 IN^2/FT	0.13 IN^2/FT	10'-6"

MARK	DESCRIPTION	BY	CHK'D	RECM'D	DATE
REVISIONS					

PENNDOT DRAWING # 2014-115

COMMONWEALTH OF PENNSYLVANIA
DEPARTMENT OF TRANSPORTATION
BUREAU OF PROJECT DELIVERY

ECO-SPAN®

PRECAST ARCH-BOX SYSTEM

STANDARD DETAIL DRAWINGS

8 / 7 / 2018

COMMONWEALTH OF PENNSYLVANIA REGISTERED PROFESSIONAL JEFFREY J. VON HANDORF ENGINEER No. 076224

08-06-2018

DESIGNER

PRETEK GROUP
PO BOX 751471
DAYTON, OHIO 45475
800.241.0925
CERTIFIED BY: JEFFREY J. VON HANDORF
PENNSYLVANIA PE 076224

PROJECT NUMBER:	PADOT DWG
DATE:	08/06/2018
DESIGNED BY:	TEN
DRAWN BY:	JJC
CHECKED BY:	JJV

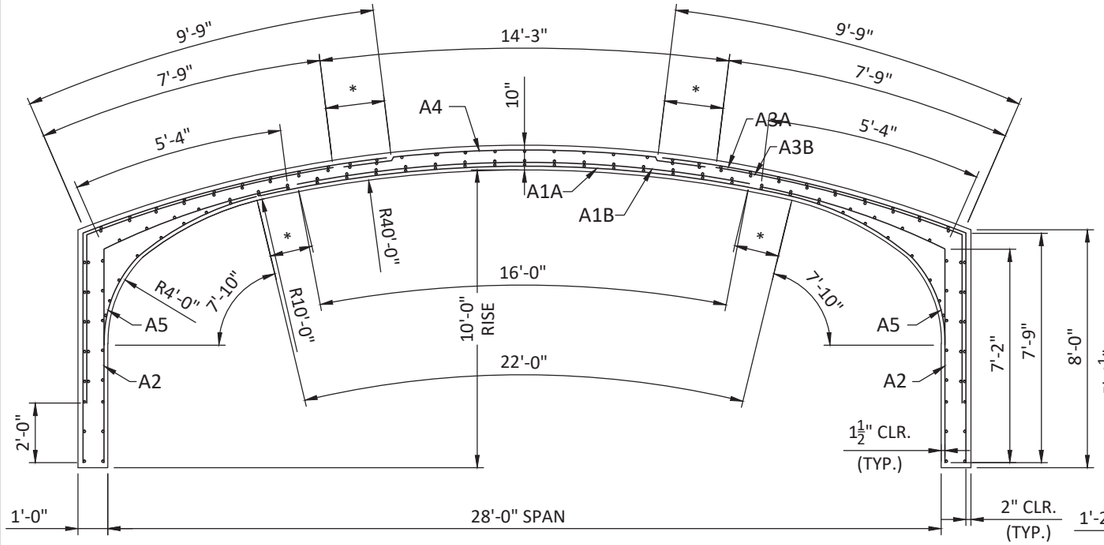

28' SPAN

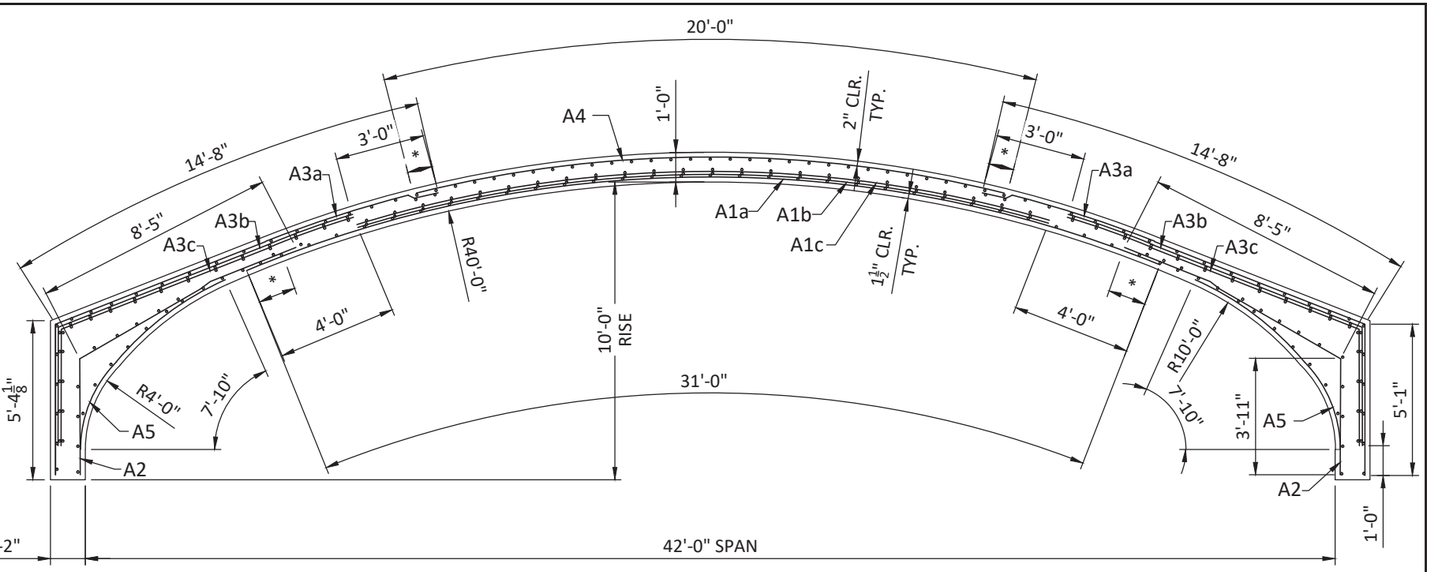

42' SPAN

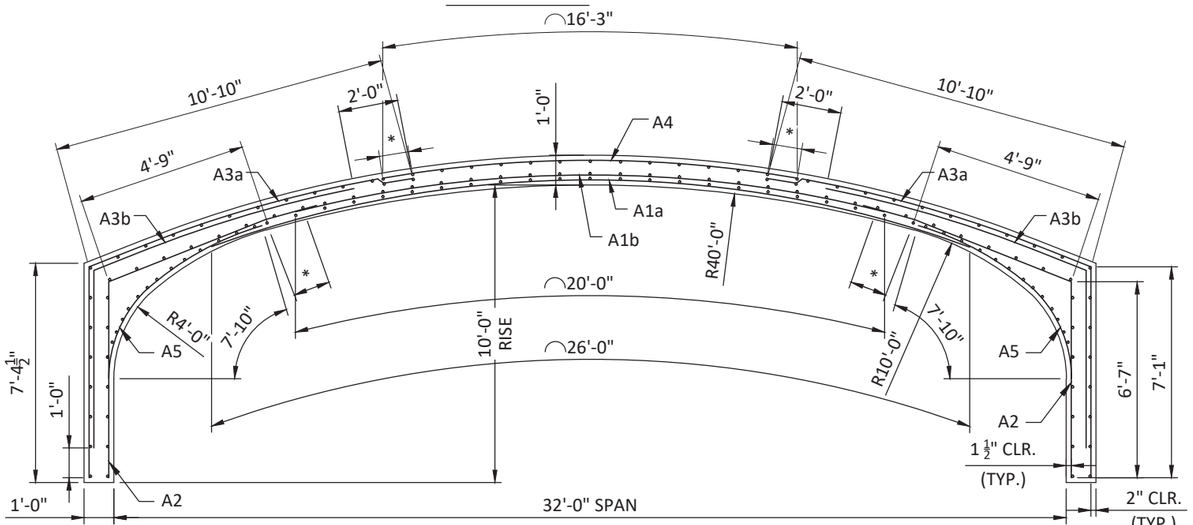

32' SPAN

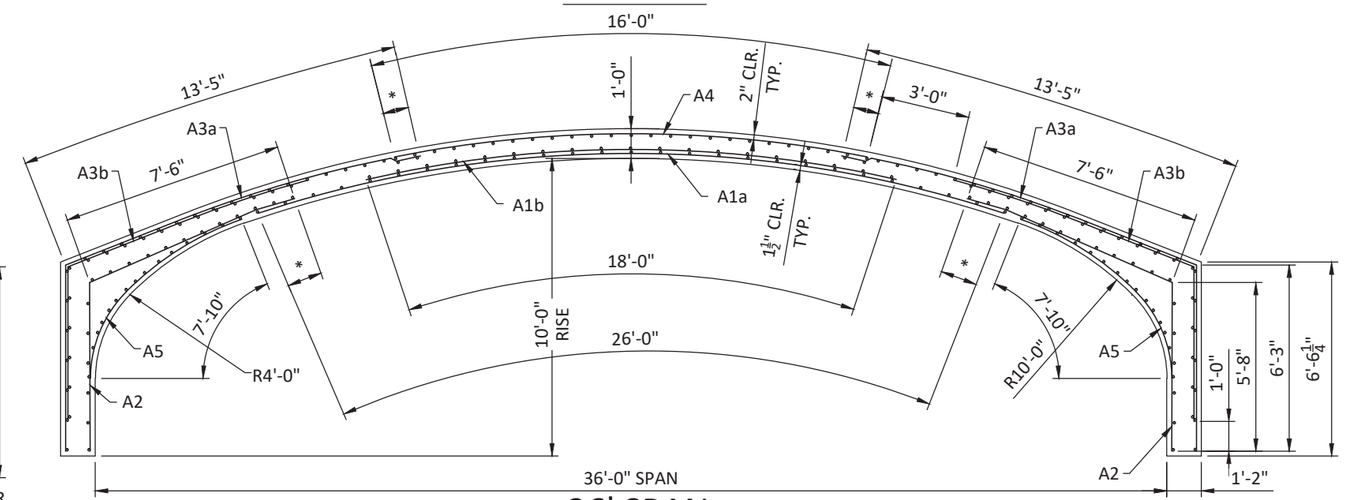

36' SPAN

◠ = **LENGTH ALONG ARCH**

28' SPAN (10' RISE)				32' SPAN (10' RISE)				36' SPAN (10' RISE)			
ZONE	CIR. AREA	LONG. AREA	LENGTH	ZONE	CIR. AREA	LONG. AREA	LENGTH	ZONE	CIR. AREA	LONG. AREA	LENGTH
A1a	**	0.13 IN²/FT	22'-0"	A1a	**	0.13 IN²/FT	26'-0"	A1a	**	0.13 IN²/FT	26'-0"
A1b	**	0.05 IN²/FT	16'-0"	A1b	**	0.05 IN²/FT	20'-0"	A1b	**	0.05 IN²/FT	18'-0"
A2	0.48 IN²/FT	0.13 IN²/FT	12'-6"	A2	0.48 IN²/FT	0.13 IN²/FT	11'-4"	A2	0.48 IN²/FT	0.13 IN²/FT	13'-2"
A3a	**	0.13 IN²/FT	17'-6"	A3a	**	0.13 IN²/FT	17'-11"	A3a	**	0.13 IN²/FT	19'-8"
A3b	**	0.05 IN²/FT	13'-6"	A3b	**	0.05 IN²/FT	14'-11"	A3b	**	0.05 IN²/FT	15'-8"
A4	0.48 IN²/FT	0.13 IN²/FT	14'-3"	A4	0.48 IN²/FT	0.13 IN²/FT	16'-3"	A4	0.48 IN²/FT	0.13 IN²/FT	16'-0"
A5	0.24 IN²/FT	0.13 IN²/FT	7'-10"	A5	0.24 IN²/FT	0.13 IN²/FT	7'-10"	A5	0.24 IN²/FT	0.13 IN²/FT	7'-10"

NOTES

* SEE GENERAL NOTES ON SHEET 2 FOR MINIMUM OVERLAP LENGTHS.

** SEE SHEET 12 FOR A1 AND A3 STEEL AREAS.

1. ALL REINFORCING DIMENSIONS SHOWN ARE FOR 10'-0" RISE UNO. REVISE A2 AND A3 LENGTHS ACCORDINGLY BASED ON THE CHANGE IN RISE.
2. THESE STEEL AREAS ARE SHOWN FOR COVER OF 12' OR LESS. ECO-SPAN SHALL PERFORM SPECIAL DESIGNS FOR COVER GREATER THAN 12'.

DESIGN DATA

3. F'_C = AS DETERMINED BY DESIGN WITH 6,000 PSI MINIMUM FOR CONCRETE
4. F'_Y = 60,000 PSI FOR STEEL REINFORCING BARS
5. F'_Y = 65,000 PSI FOR WELDED WIRE FABRIC

MARK	DESCRIPTION	BY	CHK'D	RECM'D	DATE
REVISIONS					

PENNDOT DRAWING # 2014-115

COMMONWEALTH OF PENNSYLVANIA
DEPARTMENT OF TRANSPORTATION
BUREAU OF PROJECT DELIVERY

ECO-SPAN®
PRECAST ARCH-BOX SYSTEM
STANDARD DETAIL DRAWINGS

DESIGNER

PRETEK GROUP
PO BOX 751471
DAYTON, OHIO 45475
800.241.0925
CERTIFIED BY: JEFFREY J. VON HANDORF
PENNSYLVANIA PE 076224

PROJECT NUMBER:	PADOT DWG
DATE:	08/06/2018
DESIGNED BY:	TEN
DRAWN BY:	JJC
CHECKED BY:	JJV

COMMONWEALTH OF PENNSYLVANIA REGISTERED PROFESSIONAL JEFFREY J. VON HANDORF ENGINEER No. 076224

08-06-2018

8 / 7 / 2018

SHT. 10 OF 16

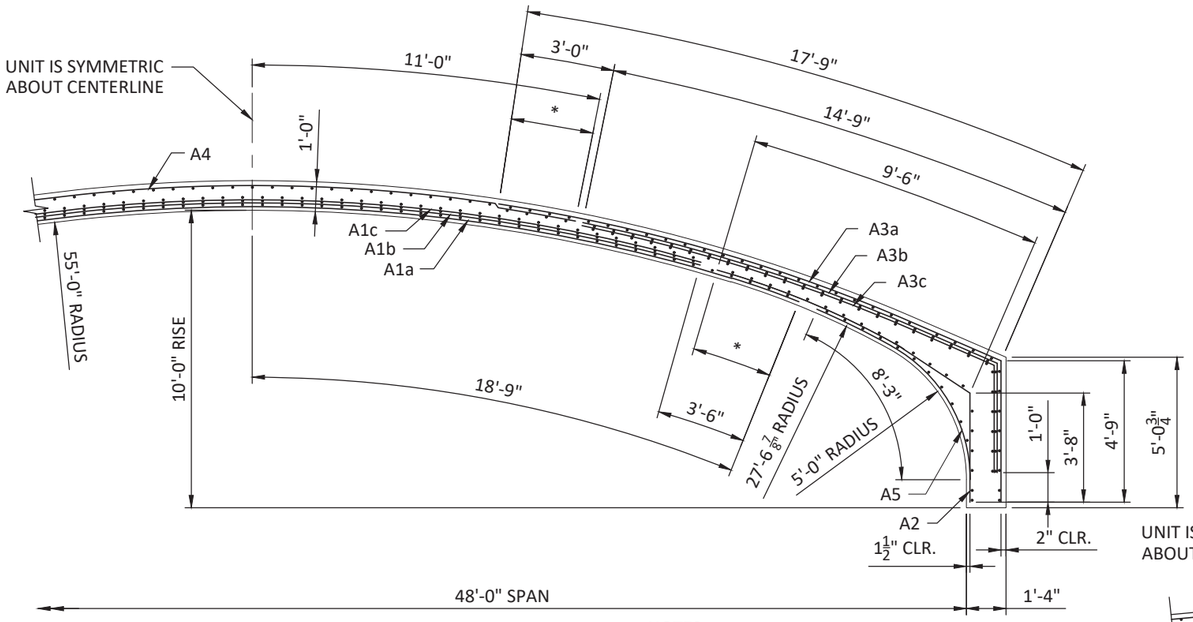

48' SPAN

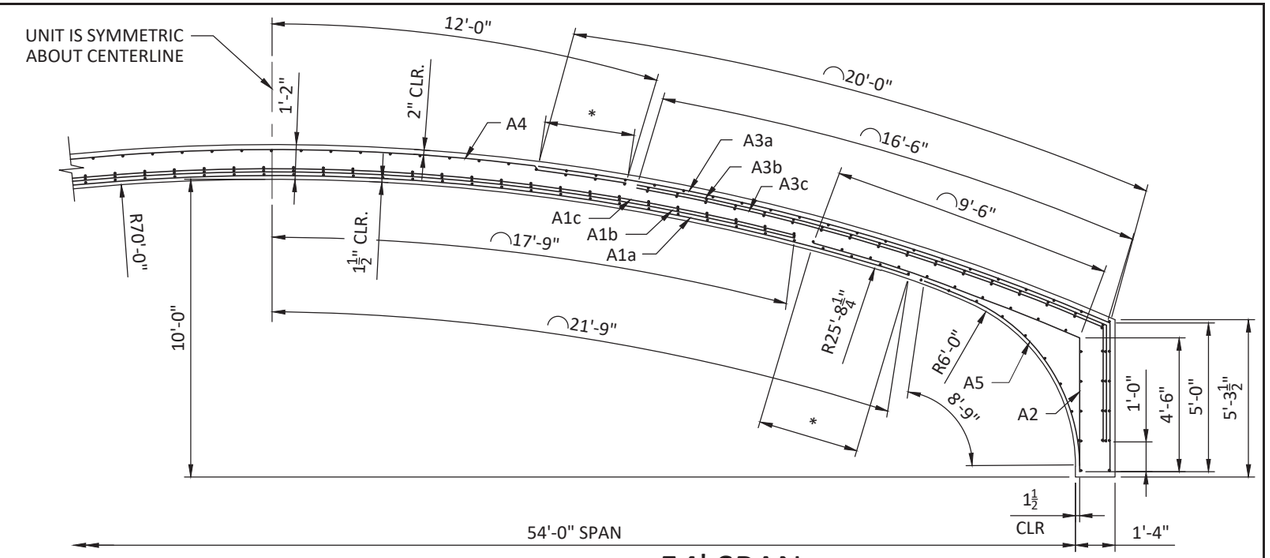

54' SPAN

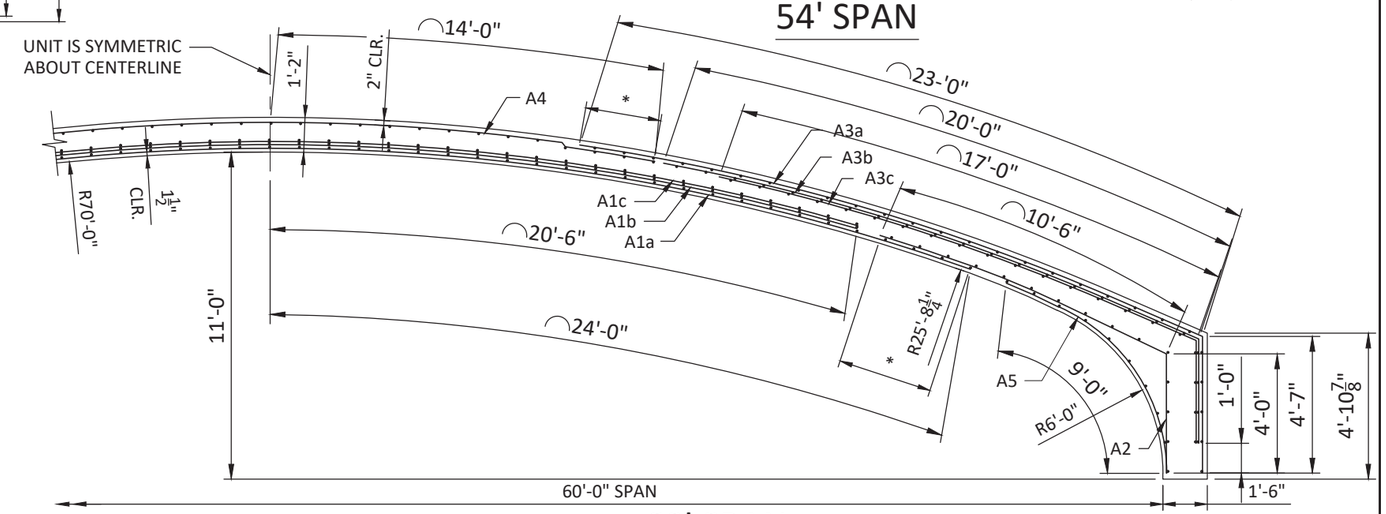

60' SPAN

NOTES

* SEE GENERAL NOTES ON SHEET 2 FOR MINIMUM OVERLAP LENGTHS.
** SEE SHEET 12 FOR A1 AND A3 STEEL AREAS.

1. ALL REINFORCING DIMENSIONS SHOWN ARE FOR 10'-0" RISE UNO. REVISE A2 AND A3 LENGTHS ACCORDINGLY BASED ON THE CHANGE IN RISE.
2. THESE STEEL AREAS ARE SHOWN FOR COVER OF 12' OR LESS. ECO-SPAN SHALL PERFORM SPECIAL DESIGNS FOR COVER GREATER THAN 12'.

DESIGN DATA

3. F'_C = AS DETERMINED BY DESIGN WITH 6,000 PSI MINIMUM FOR CONCRETE
4. F'_Y = 60,000 PSI FOR STEEL REINFORCING BARS
5. F'_Y = 65,000 PSI FOR WELDED WIRE FABRIC

◠ = **LENGTH ALONG ARCH**

42' SPAN (10' RISE)				48' SPAN (10' RISE)				54' SPAN (10' RISE)				60' SPAN (11' RISE)			
ZONE	CIR. AREA	LONG. AREA	LENGTH	ZONE	CIR. AREA	LONG. AREA	LENGTH	ZONE	CIR. AREA	LONG. AREA	LENGTH	ZONE	CIR. AREA	LONG. AREA	LENGTH
A1a	**	0.13 IN^2/FT	31'-0"	A1a	**	0.13 IN^2/FT	37'-6"	A1a	**	0.13 IN^2/FT	43'-6"	A1a	**	0.13 IN^2/FT	48'-0"
A1b	**	0.05 IN^2/FT	23'-0"	A1b	**	0.05 IN^2/FT	30'-6"	A1b	**	0.05 IN^2/FT	35'-6"	A1b	**	0.05 IN^2/FT	41'-0"
A1c	**	0.05 IN^2/FT	23'-0"	A1c	**	0.05 IN^2/FT	30'-6"	A1c	**	0.05 IN^2/FT	35'-6"	A1c	**	0.05 IN^2/FT	41'-0"
A2	0.48 IN^2/FT	0.13 IN^2/FT	12'-4"	A2	0.48 IN^2/FT	0.13 IN^2/FT	13'-2"	A2	0.48 IN^2/FT	0.13 IN^2/FT	14'-0"	A2	0.48 IN^2/FT	0.13 IN^2/FT	14'-6"
A3a	**	0.13 IN^2/FT	19'-9"	A3a	**	0.13 IN^2/FT	22'-6"	A3a	**	0.13 IN^2/FT	25'-0"	A3a	**	0.13 IN^2/FT	27'-7"
A3b	**	0.05 IN^2/FT	15'-9"	A3b	**	0.05 IN^2/FT	18'-6"	A3b	**	0.05 IN^2/FT	20'-6"	A3b	**	0.05 IN^2/FT	23'-7"
A3c	**	0.05 IN^2/FT	15'-9"	A3c	**	0.05 IN^2/FT	18'-6"	A3c	**	0.05 IN^2/FT	20'-6"	A3c	**	0.05 IN^2/FT	20'-7"
A4	0.48 IN^2/FT	0.13 IN^2/FT	20'-0"	A4	0.48 IN^2/FT	0.13 IN^2/FT	22'-0"	A4	0.48 IN^2/FT	0.13 IN^2/FT	24'-0"	A4	0.48 IN^2/FT	0.13 IN^2/FT	28'-0"
A5	0.24 IN^2/FT	0.13 IN^2/FT	7'-10"	A5	0.24 IN^2/FT	0.13 IN^2/FT	8'-3"	A5	0.24 IN^2/FT	0.13 IN^2/FT	8'-9"	A5	0.24 IN^2/FT	0.13 IN^2/FT	8'-3"

MARK	DESCRIPTION	BY	CHK'D	RECM'D	DATE
	REVISIONS				

PENNDOT DRAWING # 2014-115

COMMONWEALTH OF PENNSYLVANIA
DEPARTMENT OF TRANSPORTATION
BUREAU OF PROJECT DELIVERY

ECO-SPAN®
PRECAST ARCH-BOX SYSTEM
STANDARD DETAIL DRAWINGS

8 / 7 / 2018

COMMONWEALTH OF PENNSYLVANIA
REGISTERED PROFESSIONAL
JEFFREY J. VON HANDORF
ENGINEER
08-06-2018

DESIGNER

PRETEK GROUP
PO BOX 751471
DAYTON, OHIO 45475
800.241.0925
CERTIFIED BY: JEFFREY J. VON HANDORF
PENNSYLVANIA PE 076224

PROJECT NUMBER:	PADOT DWG
DATE:	08/06/2018
DESIGNED BY:	TEN
DRAWN BY:	JJC
CHECKED BY:	JJV

ARCH UNIT PRIMARY REINFORCING

	12' SPAN (4' TO 10' RISE)			14' SPAN (4' TO 10' RISE)			16' SPAN (5' TO 10' RISE)			20' SPAN (5' TO 10' RISE)			24' SPAN (6' TO 10' RISE)		
COVER (FT)	A1 (IN^2/FT)	A3 (IN^2/FT)	F'_C REQ'D (PSI)	A1 (IN^2/FT)	A3 (IN^2/FT)	F'_C REQ'D (PSI)	A1 (IN^2/FT)	A3 (IN^2/FT)	F'_C REQ'D (PSI)	A1 (IN^2/FT)	A3 (IN^2/FT)	F'_C REQ'D (PSI)	A1 (IN^2/FT)	A3 (IN^2/FT)	F'_C REQ'D (PSI)
1.00	0.54	0.54	5000	0.72	0.66	5000	0.84	0.60	5000	1.08	0.84	6000*	1.44	0.96	6000*
3	0.48	0.48	5000	0.60	0.57	5000	0.60	0.54	5000	0.84	0.96	6000	1.20	0.84	6000
6	0.48	0.48	5000	0.60	0.57	5000	0.54	0.57	5000	0.84	0.84	6000	0.84	0.96	6000
9	0.48	0.48	5000	0.60	0.57	5000	0.54	0.57	5000	0.84	0.84	6000	0.96	1.20	6000
12	0.57	0.60	5000	0.72	0.84	5000	0.72	0.84	5000	1.08	1.08	6000	1.08	1.56	6000*

*SHEAR REINFORCING REQUIRED FOR 9' RISE AND LOWER. CONTACT ECO-SPAN @ 800-241-0925 FOR PROJECT SPECIFIC DESIGN

*SHEAR REINFORCING REQUIRED FOR 5' RISE

*SHEAR REINFORCING REQUIRED FOR 6' RISE

	28' SPAN (7' TO 11' RISE)			32' SPAN (7' TO 12' RISE)			36' SPAN (8' TO 13' RISE)			42' SPAN (10' TO 13' RISE)			48' SPAN (10' TO 13' RISE)		
COVER (FT)	A1 (IN^2/FT)	A3 (IN^2/FT)	F'_C REQ'D (PSI)	A1 (IN^2/FT)	A3 (IN^2/FT)	F'_C REQ'D (PSI)	A1 (IN^2/FT)	A3 (IN^2/FT)	F'_C REQ'D (PSI)	A1 (IN^2/FT)	A3 (IN^2/FT)	F'_C REQ'D (PSI)	A1 (IN^2/FT)	A3 (IN^2/FT)	F'_C REQ'D (PSI)
1.00	1.44	0.84	6000	1.26	0.96	6000	1.08	0.96	6000	1.20	1.32	6000*	2.28	2.16	6000*
3	1.08	0.96	6000	0.96	0.96	6000	1.20	1.08	6000	1.08	1.44	6000	1.56	1.68	6000
6	1.20	1.08	6000	1.08	1.08	6000	1.08	1.08	6000	1.08	1.80	6000	1.44	2.16	6000
9	1.20	1.32	6000	1.08	1.20	6000	1.08	1.20	6000	0.96	2.16	6000*	1.44	2.76	6000*
12	1.20	1.44	6000	1.08	1.56	6000*	1.08	1.56	6000*	1.20	2.64	6000**	1.44	3.24	6000**

*SHEAR REINFORCING REQUIRED FOR 8' RISE AND LOWER

*SHEAR REINFORCING REQUIRED FOR 9' RISE AND LOWER

*SHEAR REINFORCING REQUIRED FOR 10' RISE
**SHEAR REINFORCING REQUIRED FOR 13' RISE AND LOWER

*SHEAR REINFORCING REQUIRED FOR ALL RISE.
**CONCRETE STRENGTH > 6000PSI AND SHEAR REINFORCING REQUIRED.

	54' SPAN (10' TO 13 RISE)			60' SPAN (11' TO 13' RISE)		
COVER (FT)	A1 (IN^2/FT)	A3 (IN^2/FT)	F'_C REQ'D (PSI)	A1 (IN^2/FT)	A3 (IN^2/FT)	F'_C REQ'D (PSI)
2.50	3.60	3.60	6000*	1.92	2.52	6000*
3	3.36	3.60	6000**	1.80	2.40	6000**
6	2.40	3.60	6000**	1.68	3.48	6000**
9	-	-	-	-	-	-
12	-	-	-	-	-	-

*SHEAR REINFORCING REQUIRED FOR ALL RISES.
**SHEAR REINFORCING REQUIRED FOR 10'-12' RISES.

*CONCRETE STRENGTH > 6000PSI REQUIRED FOR 12' AND 13' RISES, SHEAR REINFORCING REQUIRED FOR ALL RISES.
**SHEAR REINFORCING REQUIRED FOR 10'-12' RISES.

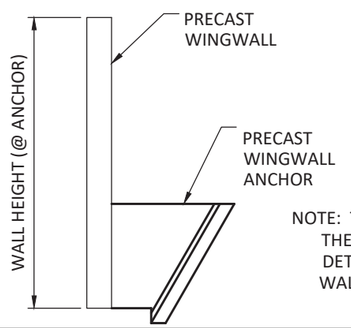

WINGWALL ANCHOR LAYOUT GUIDELINES

NOTE: THE ACTUAL NUMBER, SPACING, AND TYPE OF PRECAST WINGWALL ANCHORS IS TO BE DETERMINED BY THE ECOSPAN MANUFACTURER. HOWEVER, USE THE FOLLOWING CHARTS AS A GENERAL GUIDELINE TO DETERMINE APPROXIMATELY HOW MANY AND WHAT TYPE ANCHORS ARE REQUIRED FOR THE PRECAST WALL. THE TYPE OF EACH ANCHOR SHOULD BE DETERMINED BY THE WALL'S HEIGHT AT THAT ANCHOR'S LOCATION (SEE PLAN VIEW ON SHEET 3 FOR TYPICAL ANCHOR SPACING).

NOTE: TYPE 2 ANCHORS MAY BE USED FOR WALL HEIGHT LESS THAN 4'-6", WITH OR WITHOUT LIVE LOAD SURCHARGE.

NOTE: COORDINATE WINGWALL PANEL WIDTHS WITH PRECASTER BEFORE COMPLETING SHOP DRAWINGS WHEN FORMLINER IS REQUIRED

NUMBER OF ANCHORS PER WALL	
LENGTH OF WALL	NO. ANCHORS
L ≤ 6' – 0"	1
6'– 0" < L ≤ 11' – 0"	2
11"- 0" < L ≤ 16'-6"	3
16' – 6" < L ≤ 22'-0"	4
L > 22'-0"	MULTIPLE-PIECE

ANCHOR TYPE GUIDELINES (WITHOUT LIVE LOAD SURCHARGE)

BACKFILL SLOPE (MEAS. FROM PERPENDICULAR TO WALL)	WALL HEIGHT AT PRECAST ANCHOR LOCATION - FT (SEE DIAGRAM AT ABOVE)															
	<5'	6'	7'	8'	9'	10'	11'	12'	13'	14'	15'	16'	17'	18'	19'	20'
LEVEL	3	3	3	3	3	3	3	3	4	4	4	5	5	5	6	7
3:1 @ 45 deg. (4.24 : 1)	3	3	3	3	3	3	4	4	5	5	5	6	6	7		
4:1	3	3	3	3	3	4	4	4	5	5	6	7	7			
3:1	3	3	3	3	3	4	4	5	5	5	6	7				
2:1 @ 45 deg. (2.83 : 1)	3	3	3	4	4	5	5	5	5	6	6	7				
2:1	3	3	3	4	4	5	6	6	7							

ANCHOR TYPE GUIDELINES (WITH LIVE LOAD SURCHARGE)

BACKFILL SLOPE (MEAS. FROM PERPENDICULAR TO WALL)	WALL HEIGHT AT PRECAST ANCHOR LOCATION - FT (SEE DIAGRAM AT ABOVE)															
	<5'	6'	7'	8'	9'	10'	11'	12'	13'	14'	15'	16'	17'	18'	19'	20
LEVEL	3	3	3	3	4	4	4	5	5	5	6	6	7			
3:1 @ 45 deg. (4.24 : 1)	3	3	3	3	4	4	5	5	5	6	6	7				
4:1	3	3	3	3	4	4	5	5	5	6	6	7				
3:1	3	3	3	4	4	5	5	6	6	7						
2:1 @ 45 deg. (2.83 : 1)	3	3	3	4	4	5	5	6	6	7						
2:1	3	4	4	5	5	6	7									

MARK	DESCRIPTION	BY	CHK'D	RECM'D	DATE

REVISIONS

PENNDOT DRAWING # 2014-115

COMMONWEALTH OF PENNSYLVANIA
DEPARTMENT OF TRANSPORTATION
BUREAU OF PROJECT DELIVERY

ECO-SPAN®

PRECAST ARCH-BOX SYSTEM

STANDARD DETAIL DRAWINGS

8 / 7 / 2018

COMMONWEALTH OF PENNSYLVANIA REGISTERED PROFESSIONAL JEFFREY J. VON HANDORF ENGINEER No. 076224

08-06-2018

DESIGNER

PRETEK GROUP
PO BOX 751471
DAYTON, OHIO 45475
800.241.0925
CERTIFIED BY: JEFFREY J. VON HANDORF
PENNSYLVANIA PE 076224

PROJECT NUMBER:	PADOT DWG
DATE:	08/06/2018
DESIGNED BY:	TEN
DRAWN BY:	JJC
CHECKED BY:	JJV

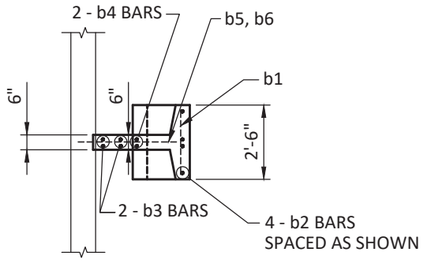

PLAN - TYPE 2

BAR LIST - TYPE 2					
MARK	SIZE	QNTY.	TYPE	LENGTH	EPOXY COATED
b1	#5	4	STRAIGHT	2'-2"	N
b2	#5	4	STRAIGHT	2'-6"	N
b3	#5	2	STRAIGHT	1'-8"	N
b4	#5	2	TYPE A	2'-2"	N
b5	#5	1	TYPE B	3'-4"	Y
b6	#5	1	TYPE B	4'-0"	Y

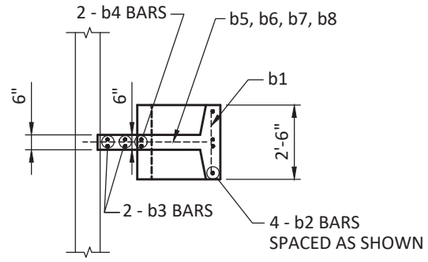

PLAN - TYPE 3

BAR LIST - TYPE 3					
MARK	SIZE	QNTY.	TYPE	LENGTH	EPOXY COATED
b1	#5	7	STRAIGHT	2'-2"	N
b2	#5	4	STRAIGHT	4'-2"	N
b3	#5	4	STRAIGHT	3'-2"	N
b4	#5	2	TYPE A	3'-8"	N
b5	#5	1	TYPE B	4'-2"	Y
b6	#5	1	TYPE B	3'-10"	Y
b7	#5	1	TYPE B	3'-2"	Y
b8	#5	1	TYPE B	2'-10"	Y

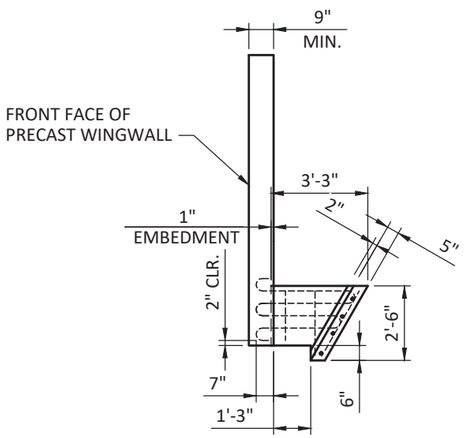

SECTION - TYPE 2

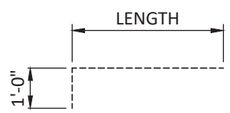

TYPE A

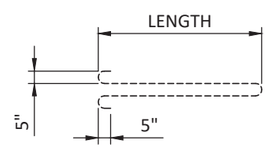

TYPE B

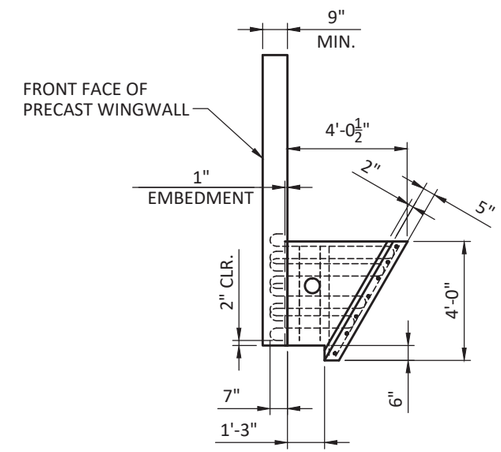

SECTION - TYPE 3

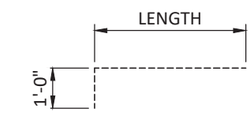

TYPE A

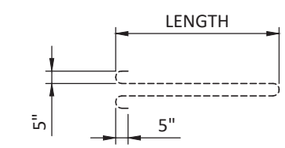

TYPE B

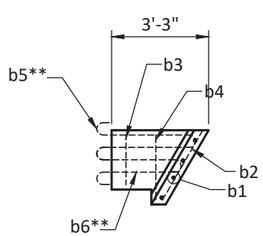

ANCHOR TYPE 2

**NOTE: 3" MAX SPACING BETWEEN BOTTOM AND TOP OF SUCCESSIVE BARS

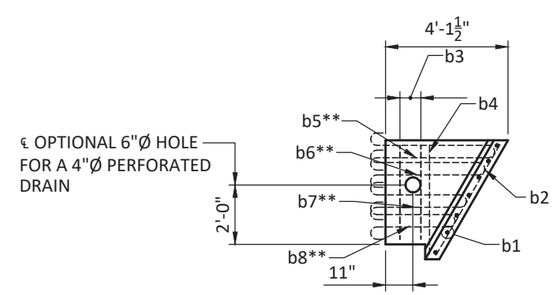

ANCHOR TYPE 3

**NOTE: 3" MAX SPACING BETWEEN BOTTOM AND TOP OF SUCCESSIVE BARS

MARK	DESCRIPTION	BY	CHK'D	RECM'D	DATE
	REVISIONS				

PENNDOT DRAWING # 2014-115

COMMONWEALTH OF PENNSYLVANIA
DEPARTMENT OF TRANSPORTATION
BUREAU OF PROJECT DELIVERY

ECO-SPAN®

PRECAST ARCH-BOX SYSTEM

STANDARD DETAIL DRAWINGS

8 / 7 / 2018

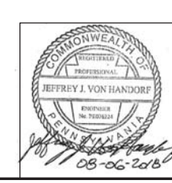

DESIGNER

PRETEK GROUP
PO BOX 751471
DAYTON, OHIO 45475
800.241.0925
CERTIFIED BY: JEFFREY J. VON HANDORF
PENNSYLVANIA PE 076224

PROJECT NUMBER:	PADOT DWG
DATE:	08/06/2018
DESIGNED BY:	TEN
DRAWN BY:	JJC
CHECKED BY:	JJV

SHT. 13 OF 16

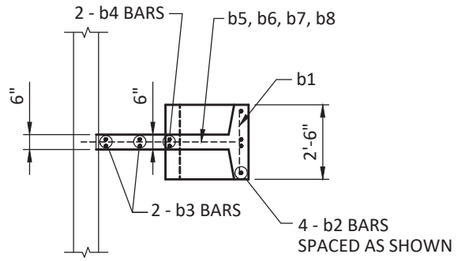

PLAN - TYPE 4

BAR LIST - TYPE 4					
MARK	SIZE	QNTY.	TYPE	LENGTH	EPOXY COATED
b1	#5	7	STRAIGHT	2'-2"	N
b2	#5	4	STRAIGHT	4'-2"	N
b3	#5	4	STRAIGHT	3'-2"	N
b4	#5	2	TYPE A	3'-8"	N
b5	#5	1	TYPE B	5'-2"	Y
b6	#5	1	TYPE B	4'-10"	Y
b7	#5	1	TYPE B	4'-2"	Y
b8	#5	1	TYPE B	3'-10"	Y

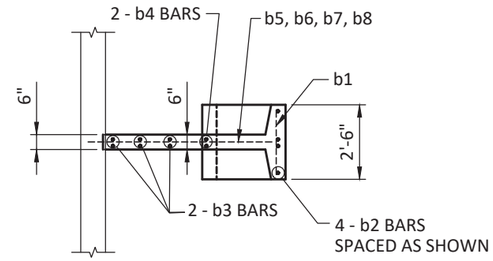

PLAN - TYPE 5

BAR LIST - TYPE 5					
MARK	SIZE	QNTY.	TYPE	LENGTH	EPOXY COATED
b1	#5	7	STRAIGHT	2'-2"	N
b2	#5	4	STRAIGHT	4'-2"	N
b3	#5	6	STRAIGHT	3'-2"	N
b4	#5	2	TYPE A	3'-8"	N
b5	#5	1	TYPE B	6'-2"	Y
b6	#5	1	TYPE B	5'-10"	Y
b7	#5	1	TYPE B	5'-2"	Y
b8	#5	1	TYPE B	4'-10"	Y

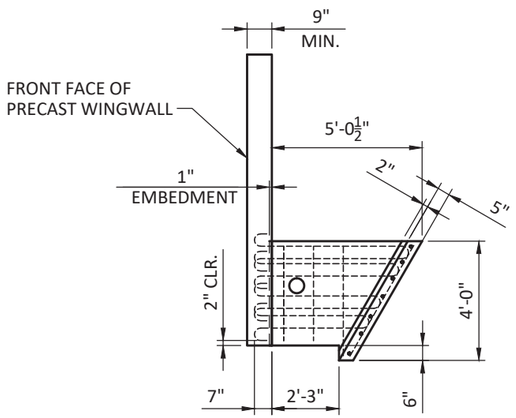

SECTION - TYPE 4

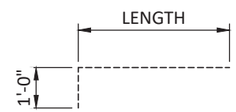

TYPE A

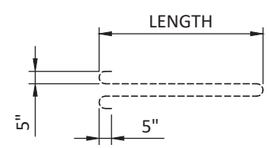

TYPE B

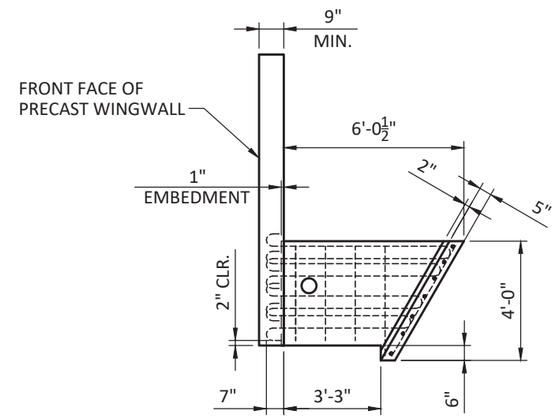

SECTION - TYPE 5

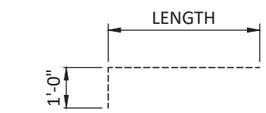

TYPE A

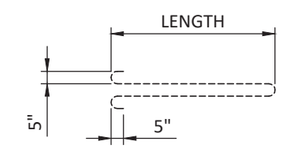

TYPE B

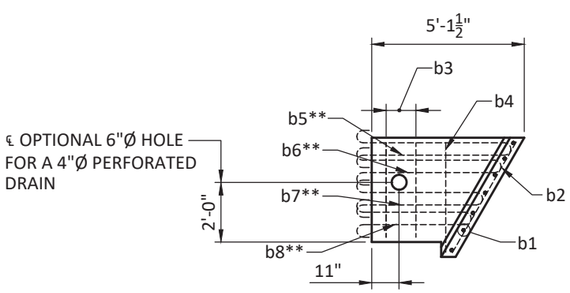

**NOTE: 3" MAX SPACING BETWEEN BOTTOM AND TOP OF SUCCESSIVE BARS

ANCHOR TYPE 4

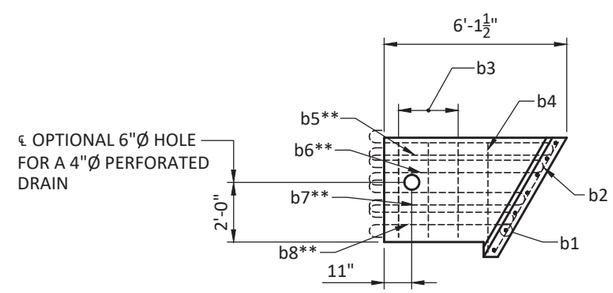

**NOTE: 3" MAX SPACING BETWEEN BOTTOM AND TOP OF SUCCESSIVE BARS

ANCHOR TYPE 5

MARK	DESCRIPTION	BY	CHK'D	RECM'D	DATE
REVISIONS					

PENNDOT DRAWING # 2014-115

COMMONWEALTH OF PENNSYLVANIA
DEPARTMENT OF TRANSPORTATION
BUREAU OF PROJECT DELIVERY

ECO-SPAN®

PRECAST ARCH-BOX SYSTEM

STANDARD DETAIL DRAWINGS

8 / 7 / 2018

COMMONWEALTH OF PENNSYLVANIA
REGISTERED PROFESSIONAL
JEFFREY J. VON HANDORF
08-06-2018

DESIGNER		
PRETEK GROUP PO BOX 751471 DAYTON, OHIO 45475 800.241.0925 CERTIFIED BY: JEFFREY J. VON HANDORF PENNSYLVANIA PE 076224	PROJECT NUMBER:	PADOT DWG
	DATE:	08/06/2018
	DESIGNED BY:	TEN
	DRAWN BY:	JJC
	CHECKED BY:	JJV

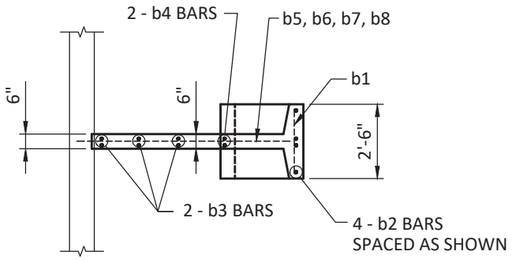

PLAN - TYPE 6

BAR LIST - TYPE 6					
MARK	SIZE	QNTY.	TYPE	LENGTH	EPOXY COATED
b1	#5	7	STRAIGHT	2'-2"	N
b2	#5	4	STRAIGHT	4'-2"	N
b3	#5	6	STRAIGHT	3'-2"	N
b4	#5	2	TYPE A	3'-8"	N
b5	#5	1	TYPE B	7'-2"	Y
b6	#5	1	TYPE B	6'-10"	Y
b7	#5	1	TYPE B	6'-2"	Y
b8	#5	1	TYPE B	5'-10"	Y

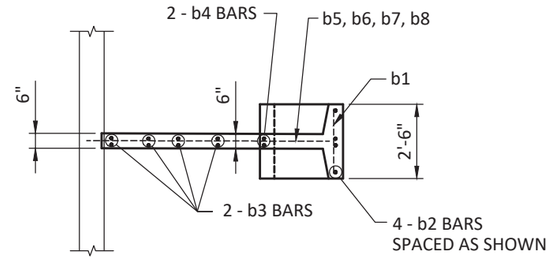

PLAN - TYPE 7

BAR LIST - TYPE 7					
MARK	SIZE	QNTY.	TYPE	LENGTH	EPOXY COATED
b1	#5	7	STRAIGHT	2'-2"	N
b2	#5	4	STRAIGHT	4'-2"	N
b3	#5	8	STRAIGHT	3'-2"	N
b4	#5	2	TYPE A	3'-8"	N
b5	#5	1	TYPE B	8'-2"	Y
b6	#5	1	TYPE B	7'-10"	Y
b7	#5	1	TYPE B	7'-2"	Y
b8	#5	1	TYPE B	6'-10"	Y
b7	#5	2	TYPE A	5'-0"	Y

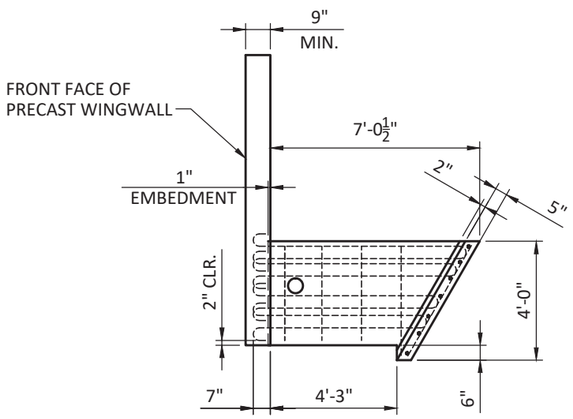

SECTION - TYPE 6

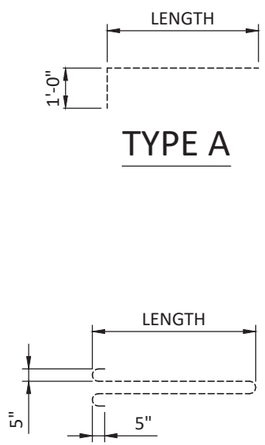

TYPE A

TYPE B

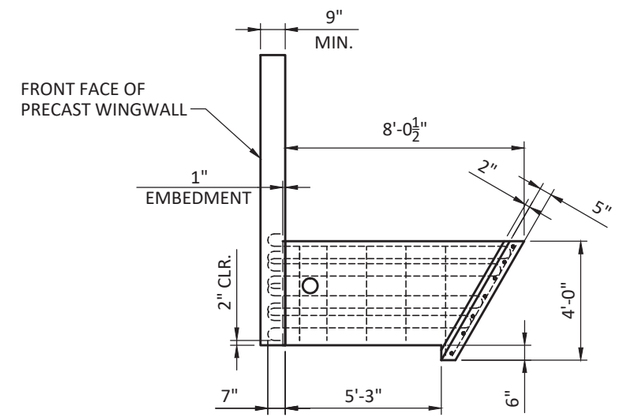

SECTION - TYPE 7

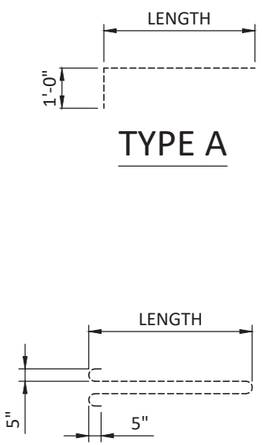

TYPE A

TYPE B

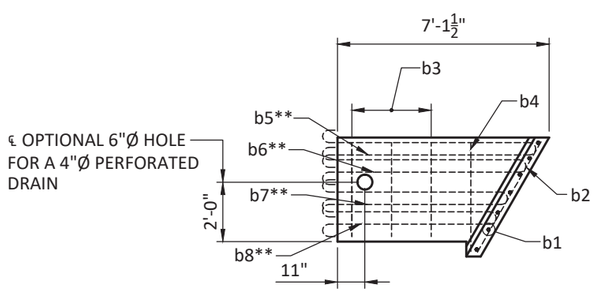

**NOTE: 3" MAX SPACING BETWEEN BOTTOM AND TOP OF SUCCESSIVE BARS

ANCHOR TYPE 6

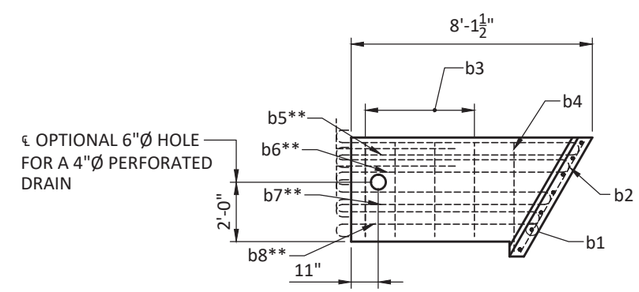

**NOTE: 3" MAX SPACING BETWEEN BOTTOM AND TOP OF SUCCESSIVE BARS

ANCHOR TYPE 7

MARK	DESCRIPTION	BY	CHK'D	RECM'D	DATE
REVISIONS					

PENNDOT DRAWING # 2014-115

COMMONWEALTH OF PENNSYLVANIA
DEPARTMENT OF TRANSPORTATION
BUREAU OF PROJECT DELIVERY

ECO-SPAN®

PRECAST ARCH-BOX SYSTEM

STANDARD DETAIL DRAWINGS

8 / 7 / 2018

COMMONWEALTH OF PENNSYLVANIA
REGISTERED PROFESSIONAL
JEFFREY J. VON HANDORF
ENGINEER
No. 076224
08-06-2018

DESIGNER

PRETEK GROUP
PO BOX 751471
DAYTON, OHIO 45475
800.241.0925
CERTIFIED BY: JEFFREY J. VON HANDORF
PENNSYLVANIA PE 076224

PROJECT NUMBER:	PADOT DWG
DATE:	08/06/2018
DESIGNED BY:	TEN
DRAWN BY:	JJC
CHECKED BY:	JJV

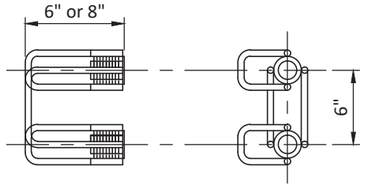

SIDE VIEW FRONT VIEW

DAYTON SUPERIOR TWO BOLT PRESET ANCHOR

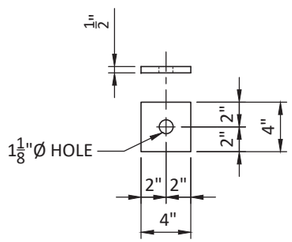

PLATE WASHER

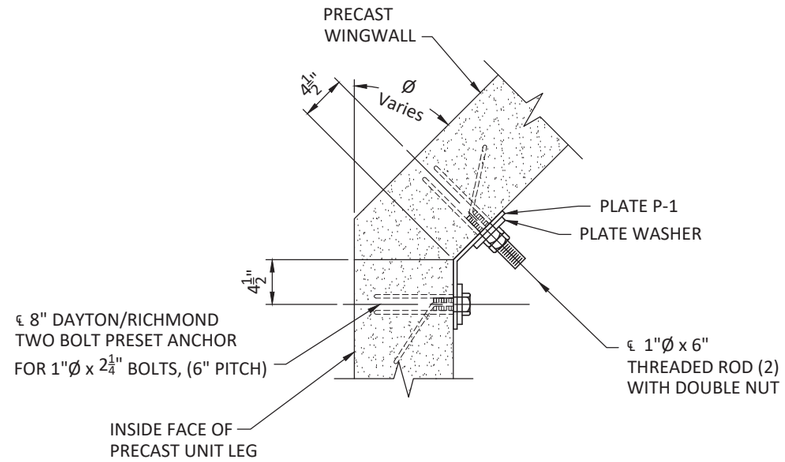

PLAN VIEW

TYPICAL WINGWALL CONNECTION DETAIL - P-1

4
3

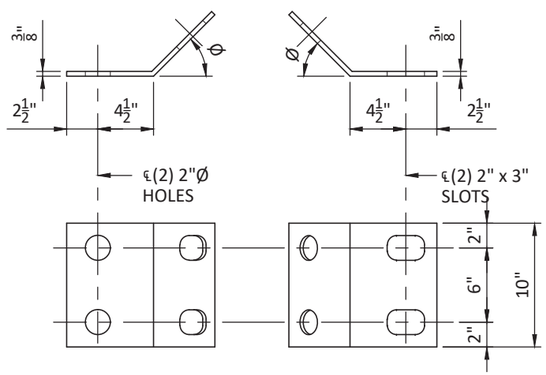

UNIT LEG WINGWALL LEG

PLATE - P-1

(PLATE - 3/8" x 14" x 10")
(GALVANIZED AS PER ASTM A153)
TOTAL P-1 PLATES REQUIRED (2 MIN.)

MARK	DESCRIPTION	BY	CHK'D	RECM'D	DATE
REVISIONS					

PENNDOT DRAWING # 2014-115

COMMONWEALTH OF PENNSYLVANIA
DEPARTMENT OF TRANSPORTATION
BUREAU OF PROJECT DELIVERY

ECO-SPAN®

PRECAST ARCH-BOX SYSTEM

STANDARD DETAIL DRAWINGS

8 / 7 / 2018

COMMONWEALTH OF PENNSYLVANIA REGISTERED PROFESSIONAL JEFFREY J. VON HANDORF ENGINEER No. 076224

08-06-2018

DESIGNER		
PRETEK GROUP PO BOX 751471 DAYTON, OHIO 45475 800.241.0925 CERTIFIED BY: JEFFREY J. VON HANDORF PENNSYLVANIA PE 076224	PROJECT NUMBER:	PADOT DWG
	DATE:	08/06/2018
	DESIGNED BY:	TEN
	DRAWN BY:	JJC
	CHECKED BY:	JJV

SHT. 16 OF 16

Product:

Item 8530-xxxx Metal Box Culvert
Aluminum Structural Plate Box Culvert
Contech Engineered Solutions LLC
PennDOT Drawing # 2013-224 PE

Approval Date:
October 18, 2019

Initiated By SOL:
483-19-05

Application/Use:

Aluminum Structural Plate Box Culverts manufactured by Contech Engineered Solutions LLC, Ohio has been approved for use as an "**As-designed**" or "**Alternate**" metal plate box culvert. The use as an "As-designed" or "Alternate" metal plate box culvert is at the discretion of the District Executive.

Aluminum Structural Plate Box Culvert usage has the following restrictions:

- Maximum Span is 25'-5".
- Structural plate box culverts may be used for all highway classifications, regardless of ADT, except where ADTT exceeds 500.
- Chief Bridge Engineer approval is required for corrugated metal buried structures exceeding these limitations.

This culvert meets both AASHTO and Design Manual, Part 4 design criteria.

Specifications:

Design/Material/Construction Specifications for this culvert system are specified on PennDOT Drawing #2013-224 PE dated 10/18/2019 of Aluminum Structural Plate Box Culvert details for your use.

Comments:

On those projects permitting the use of this system as an alternate, the Alternate Culvert Special Provision should indicate that the "Aluminum Structural Plate Box Culvert" as an alternate is allowed.

The contractor will be required to revise the pertinent contract drawings as in accordance with DM-4, PP 1.10 to show the usage of "Aluminum Structural Plate Box Culvert" and will also be required to reimburse the Department a fee per design for the review and approval of the revision. The fee shall be as specified in the contract's Special Provisions.

CONTECH®
ENGINEERED SOLUTIONS LLC

ALUMINUM STRUCTURAL PLATE BOX CULVERTS

Submittal for Construction Product Qualification to
PennDOT Section 603
Product: Metal Plate Culvert
Name: Aluminum Box Culvert
Manufacturer: Contech Engineered Solutions LLC

COMMONWEALTH OF PENNSYLVANIA
REGISTERED PROFESSIONAL
DARRELL JOHN SANDERS
ENGINEER
No. PE087551

Date: October 3, 2019
Reviewed by: Darrell Sanders

10 / 18 / 2019

PENNSYLVANIA
DEPARTMENT OF TRANSPORTATION
RECOMMENDED
ACTING CHIEF BRIDGE ENGINEER

PENNDOT ALBC DRAWING SUBMITTAL-2

PennDOT Drawing Number:
2013-224 PE

STANDARD PLATE DETAIL

(PLATE & APPURTENANCES IN ACCORDANCE WITH AASHTO M219)

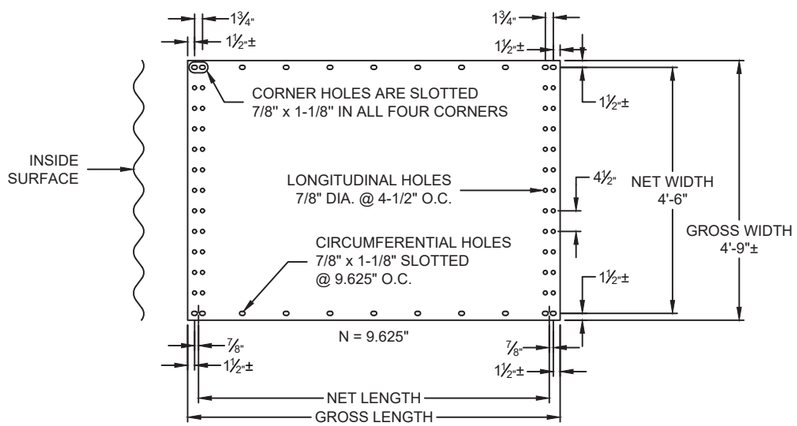

STANDARD PLATE DETAIL

2.25" NOMINAL RADIUS IN CORRUGATION

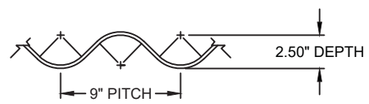

9" x 2 1/2" CORRUGATION

SPLICE RIB DETAILS

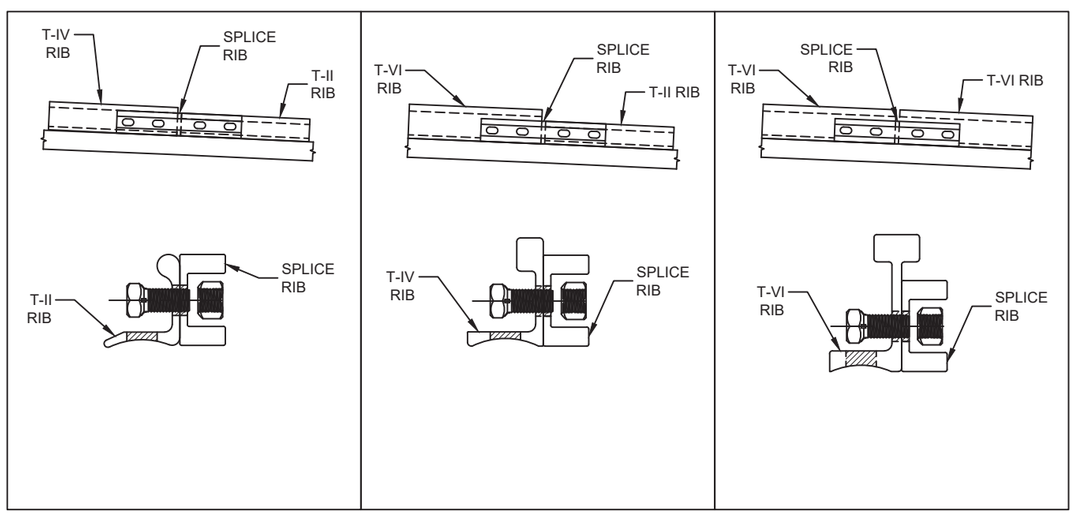

ALSP SHEET LENGTHS AND WEIGHTS

LENGTH "N"	NET LENGTH (IN.)	GROSS LENGTH (IN.)	WEIGHT PER PLATE (POUNDS)						
			.100	.125	.150	.175	.200	.225	.250
7N	67 3/8"	72 1/8"	46.53	58.19	69.85	81.39	93.06	105.13	116.78
8N	77"	81 3/4"	52.74	65.96	79.17	92.25	105.47	119.16	132.36
9N	86 5/8"	91 3/8"	58.95	73.72	88.50	103.12	117.89	133.19	147.95
10N	96 1/4"	101"	65.16	81.49	97.82	113.98	130.31	147.22	163.53
11N	105 7/8"	110 5/8"	71.36	89.25	107.14	124.84	142.73	161.25	179.11
12N	115 1/2"	120 1/4"	77.57	97.02	116.46	135.70	155.15	175.28	194.70
13N	125 1/8"	129 7/8"	83.78	104.78	125.78	146.56	167.56	189.31	210.28
14N	134 3/4"	139 1/2"	89.99	112.55	135.11	157.43	179.98	203.34	225.86
15N	144 3/8"	149 1/8"	96.20	120.31	144.43	168.29	192.40	217.36	241.45
16N	154"	158 3/4"	102.41	128.08	153.75	179.15	204.82	231.39	257.03
17N	163 5/8"	168 3/8"	108.62	135.84	163.07	190.01	217.24	245.42	272.62
18N	173 1/4"	178"	114.83	143.61	172.39	200.87	229.66	259.45	288.20
19N	182 7/8"	187 5/8"	121.04	151.38	181.71	211.73	242.07	273.48	303.78
20N	192 1/2"	197 1/4"	127.25	159.14	191.04	222.60	254.49	287.51	319.37
21N	202 1/8"	206 7/8"	133.46	166.91	200.36	233.46	266.91	301.54	334.95
22N	211 3/4"	216 1/2"	139.66	174.67	209.68	244.32	279.33	315.57	350.54
23N	221 3/8"	226 1/8"	145.87	182.44	219.00	255.18	291.75	329.60	366.12
24N	231"	235 3/4"	152.08	190.20	228.32	266.04	304.16	343.63	381.70
25N	240 5/8"	245 3/8"	158.29	197.97	237.65	276.91	316.58	357.66	397.29

(1) N = 9.625"
(2) PLATES ARE FABRICATED FROM AN ALUMINUM ALLOY WITH MATERIAL PROPERTIES THAT CONFORM TO AASHTO M219 AND ASTM B209 SPEIFICATIONS.
(3) HANDLING WEIGHTS DO NOT INCLUDE BOLTS AND NUTS.
(4) DIMENSIONS AND WEIGHTS ARE SUBJECT TO MANUFACTURING TOLERANCES.

STANDARD BOLT DETAIL

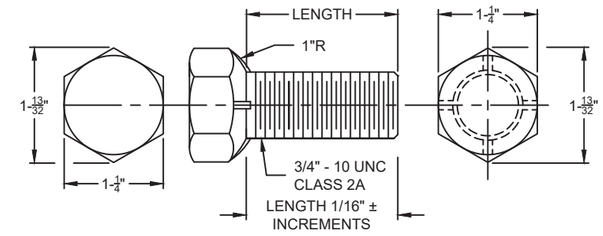

HEAVY HEX BOLT

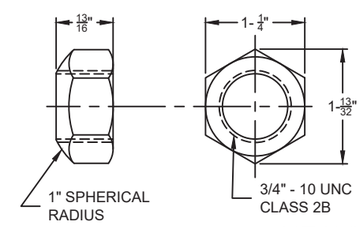

ASSEMBLY NOTES:

¾" x 1¼" BOLTS (TWO PLATE LAPS FOR SHELL)
¾" x 1½" BOLTS (RIB TO SHELL, THREE PLATE LAPS AND RIB SPLICES)
¾" x 2" BOLTS (RIB CROSSING PLATE SEAMS)

HEAVY HEX NUT

NOTES:
1. BOLTS AND NUTS SHALL BE GALVANIZED AND MEET THE PROVISIONS OF ASTM A-307 OR ASTM A-449.
2. DIMENSIONS SUBJECT TO MANUFACTURING TOLERANCES.
3. THREADS TO PROVIDE A FREE RUNNING FIT AFTER GALVANIZING.

10 / 18 / 2019

PennDOT Drawing Number:
2013-224 PE

The design and information shown on this drawing is provided as a service to the project owner, engineer and contractor by Contech Engineered Solutions LLC ("Contech"). Neither this drawing, nor any part thereof, may be used, reproduced or modified in any manner without the prior written consent of Contech. Failure to comply is done at the user's own risk and Contech expressly disclaims any liability or responsibility for such use.

If discrepancies between the supplied information upon which the drawing is based and actual field conditions are encountered as site work progresses, these discrepancies must be reported to Contech immediately for re-evaluation of the design. Contech accepts no liability for designs based on missing, incomplete or inaccurate information supplied by others.

MARK	DATE	REVISION DESCRIPTION	BY
4	8/12/2019	REVISIONS PER 8-2-19 COMMENTS	SCC
3	5/30/2019	REVISED PER PENNDOT COMMENTS	SCC
2	1/16/2015	REVISED PER PENNDOT COMMENTS	SCC
1	10/15/2014	REVISED PER PENNDOT COMMENTS	SCC

CONTECH ENGINEERED SOLUTIONS LLC
www.ContechES.com
9025 Centre Pointe Dr., Suite 400, West Chester, OH 45069
800-338-1122 513-645-7000 513-645-7993 FAX

CONTECH STRUCTURAL PLATE

ALUMINUM STRUCTURAL PLATE
BOX CULVERTS

PROJECT No.:	SEQ. No.:	DATE:
	001	9/12/2013
DESIGNED:	DRAWN: SCC	
CHECKED: BDH/MJO	APPROVED:	
SHEET NO.: 1 OF 10		

H:\DRAINAGE PLATE AND SPECIALTY ENGINEERING\SPECIFICATIONS,REGULATORY,REFERENCES & RESOURCES\STATE & FEDERAL SPECS\PENNDOT\PENNDOT ALBC\MAY 2019\PENNDOT ALBC DRAWING SUBMITTAL-2.DWG 8/12/2019 12:10 PM

BOX CULVERT CROSS SECTION

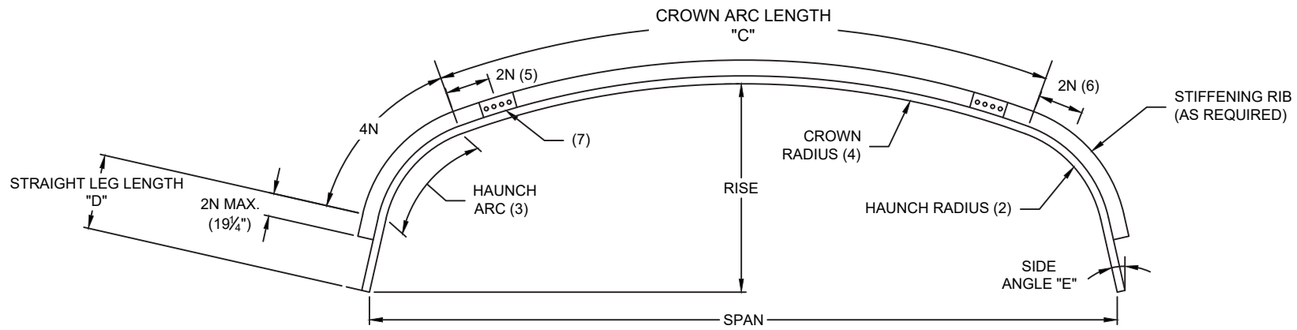

LEG LENGTH	
LEG	D
0.5N	7.1875"
1.5N	16.8125"
2.5N	26.4375"
3.5N	36.0625"
4.5N	45.6875"
5.5N	55.3125"
6.5N	64.9375"

"D" = ('N' x 9.625") + 2.375"
(TO THE EDGE OF PLATE)

GEOMETRY TABLE

Structure Number	Span	Rise	Area	Crown Arc Length "C" (N)	Side Angle "E" (degrees)	Leg (N)
1	8'-9"	2'-6"	18.4	5	15.4	0.5
2	9'-2"	3'-3"	25.4	5	15.4	1.5
3	9'-7"	4'-1"	32.6	5	15.4	2.5
4	10'-0"	4'-10"	40.2	5	15.4	3.5
5	10'-6"	5'-7"	48.1	5	15.4	4.5
6	10'-11"	6'-4"	56.4	5	15.4	5.5
7	11'-4"	7'-2"	65.0	5	15.4	6.5
8	10'-2"	2'-8"	23.0	7	13.55	0.5
9	10'-7"	3'-5"	31.1	7	13.55	1.5
10	10'-11"	4'-3"	39.5	7	13.55	2.5
11	11'-4"	5'-0"	48.2	7	13.55	3.5
12	11'-8"	5'-9"	57.2	7	13.55	4.5
13	12'-1"	6'-7"	66.4	7	13.55	5.5
14	12'-5"	7'-4"	76.0	7	13.55	6.5
15	11'-7"	2'-10"	28.1	9	11.7	0.5
16	11'-11"	3'-7"	37.4	9	11.7	1.5
17	12'-3"	4'-5"	46.9	9	11.7	2.5
18	12'-7"	5'-2"	56.6	9	11.7	3.5
19	12'-11"	6'-0"	66.6	9	11.7	4.5
20	13'-3"	6'-9"	76.9	9	11.7	5.5
21	13'-0"	3'-0"	33.8	11	9.87	0.5
22	13'-4"	3'-10"	44.2	11	9.87	1.5
23	13'-7"	4'-7"	54.8	11	9.87	2.5
24	13'-10"	5'-5"	65.6	11	9.87	3.5
25	14'-1"	6'-2"	76.6	11	9.87	4.5

Structure Number	Span	Rise	Area	Crown Arc Length "C" (N)	Side Angle "E" (degrees)	Leg (N)
26	14'-5"	3'-3"	40.0	13	8.02	0.5
27	14'-8"	4'-1"	51.5	13	8.02	1.5
28	14'-10"	4'-10"	63.2	13	8.02	2.5
29	15'-1"	5'-8"	75.1	13	8.02	3.5
30	15'-4"	6'-5"	87.2	13	8.02	4.5
31	15'-6"	7'-3"	99.4	13	8.02	5.5
32	15'-9"	8'-0"	111.8	13	8.02	6.5
33	15'-10"	3'-6"	46.8	15	6.17	0.5
34	16'-0"	4'-3"	59.5	15	6.17	1.5
35	16'-2"	5'-1"	72.3	15	6.17	2.5
36	16'-4"	5'-11"	85.2	15	6.17	3.5
37	16'-6"	6'-8"	98.3	15	6.17	4.5
38	16'-8"	7'-6"	111.5	15	6.17	5.5
39	16'-10"	8'-3"	124.8	15	6.17	6.5
40	17'-9"	3'-10"	54.4	17	14.9	0.5
41	18'-2"	4'-7"	68.3	17	14.9	1.5
42	18'-7"	5'-4"	82.5	17	14.9	2.5
43	19'-0"	6'-1"	97.1	17	14.9	3.5
44	19'-5"	6'-11"	111.9	17	14.9	4.5
45	19'-10"	7'-8"	127.1	17	14.9	5.5
46	20'-3"	8'-5"	142.6	17	14.9	6.5
47	19'-1"	4'-2"	63.3	19	12.78	0.5
48	19'-5"	4'-11"	78.3	19	12.78	1.5
49	19'-9"	5'-8"	93.6	19	12.78	2.5
50	20'-1"	6'-6"	109.2	19	12.78	3.5

Structure Number	Span	Rise	Area	Crown Arc Length "C" (N)	Side Angle "E" (degrees)	Leg (N)
51	20'-6"	7'-3"	125.0	19	12.78	4.5
52	20'-10"	8'-1"	141.2	19	12.78	5.5
53	21'-2"	8'-10"	157.6	19	12.78	6.5
54	20'-4"	4'-6"	73.1	21	10.67	0.5
55	20'-7"	5'-3"	89.2	21	10.67	1.5
56	20'-11"	6'-1"	105.5	21	10.67	2.5
57	21'-3"	6'-10"	122.1	21	10.67	3.5
58	21'-6"	7'-8"	139.0	21	10.67	4.5
59	21'-10"	8'-5"	156.0	21	10.67	5.5
60	22'-1"	9'-3"	173.3	21	10.67	6.5
61	21'-7"	4'-11"	83.8	23	8.53	0.5
62	21'-10"	5'-8"	101.0	23	8.53	1.5
63	22'-1"	6'-6"	118.4	23	8.53	2.5
64	22'-3"	7'-3"	135.9	23	8.53	3.5
65	22'-6"	8'-1"	153.7	23	8.53	4.5
66	22'-9"	8'-10"	171.6	23	8.53	5.5
67	23'-0"	9'-8"	189.8	23	8.53	6.5
68	22'-9"	5'-4"	95.5	25	6.42	0.5
69	23'-0"	6'-1"	113.7	25	6.42	1.5
70	23'-2"	6'-11"	132.1	25	6.42	2.5
71	23'-4"	7'-8"	150.6	25	6.42	3.5
72	23'-6"	8'-6"	169.3	25	6.42	4.5
73	23'-8"	9'-3"	188.1	25	6.42	5.5
74	23'-10"	10'-1"	207.0	25	6.42	6.5
75	24'-0"	5'-9"	108.2	27	4.3	0.5

Structure Number	Span	Rise	Area	Crown Arc Length "C" N	Side Angle "E" (degrees)	Leg (N)
76	24'-1"	6'-6"	127.5	27	4.3	1.5
77	24'-3"	7'-4"	146.8	27	4.3	2.5
78	24'-4"	8'-2"	166.2	27	4.3	3.5
79	24'-5"	8'-11"	185.7	27	4.3	4.5
80	24'-7"	9'-9"	205.3	27	4.3	5.5
81	24'-8"	10'-6"	225.0	27	4.3	6.5
82	25'-2"	6'-2"	122.0	29	2.18	0.5
83	25'-2"	7'-0"	142.2	29	2.18	1.5
84	25'-3"	7'-9"	162.4	29	2.18	2.5
85	25'-4"	8'-7"	182.6	29	2.18	3.5
86	25'-4"	9'-5"	202.9	29	2.18	4.5
87	25'-5"	10'-2"	223.3	29	2.18	5.5

NOTES:

(1) N = 9.625" (CIRUMFERENTIAL BOLT HOLE SPACING)

(2) HAUNCH RADIUS IS 30 1/4" FOR STRUCTURES 1-39
HAUNCH RADIUS IS 37 3/8" FOR STRUCTURES 40-87.

(3) HAUNCH ARC IS 70° FOR STRUCTURES 1-39
HAUNCH ARC IS 57° FOR STRUCTURES 40-87.

(4) SHELL CROWN RADIUS IS 297 1/2" FOR STRUCTURES 1-39
SHELL CROWN RADIUS IS 258 3/4" FOR STRUCTURES 40-87.

(5) HAUNCH RIBS, WHERE REQUIRED WITHOUT A CROWN RIB, SHALL EXTEND ONTO THE CROWN A DISTANCE OF 2N.

(6) CROWN RIBS, WHERE REQUIRED WITHOUT A HAUNCH RIB, SHALL EXTEND ONTO THE HAUNCH A DISTANCE OF 2N.

(7) HAUNCH AND CROWN RIBS, WHERE REQUIRED TOGETHER, SHALL BE SPLICED AT A POINT ON THE CROWN A DISTANCE OF 2N FROM THE HAUNCH ARC. SEE DETAIL ON SHEET 1.

(8) RISE TOLERANCE IS 1% OF SPAN.

(9) RADII ARE MEASURED TO THE INSIDE OF CORRUGATIONS. ARC LENGTHS ARE MEASURED ALONG THE CENTER OF CORRUGATIONS. PLATE LENGTHS SHOWN ARE NET LENGTHS.

10 / 18 / 2019

PennDOT Drawing Number:
2013-224 PE

The design and information shown on this drawing is provided as a service to the project owner, engineer and contractor by Contech Engineered Solutions LLC ("Contech"). Neither this drawing, nor any part thereof, may be used, reproduced or modified in any manner without the prior written consent of Contech. Failure to comply is done at the user's own risk and Contech expressly disclaims any liability or responsibility for such use.

If discrepancies between the supplied information upon which the drawing is based and actual field conditions are encountered as site work progresses, these discrepancies must be reported to Contech immediately for re-evaluation of the design. Contech accepts no liability for designs based on missing, incomplete or inaccurate information supplied by others.

MARK	DATE	REVISION DESCRIPTION	BY
4	8/12/2019	REVISIONS PER 8-2-19 COMMENTS	SCC
3	5/30/2019	REVISED PER PENNDOT COMMENTS	SCC
2	1/16/2015	REVISED PER PENNDOT COMMENTS	SCC
1	10/15/2014	REVISED PER PENNDOT COMMENTS	SCC

CONTECH ENGINEERED SOLUTIONS LLC
www.ContechES.com
9025 Centre Pointe Dr., Suite 400, West Chester, OH 45069
800-338-1122 513-645-7000 513-645-7993 FAX

CONTECH STRUCTURAL PLATE

ALUMINUM STRUCTURAL PLATE
BOX CULVERTS

PROJECT No.:	SEQ. No.:	DATE:
	001	9/12/2013
DESIGNED:	DRAWN: SCC	
CHECKED: BDH/MJO	APPROVED:	
SHEET NO.: 2 OF 10		

H:\DRAINAGE PLATE AND SPECIALTY ENGINEERING\SPECIFICATIONS,REGULATORY REFERENCES & RESOURCES\STATE & FEDERAL SPECS\PENNDOT\PENNDOT ALBC\MAY 2019\PENNDOT ALBC DRAWING SUBMITTAL-2.DWG 8/12/2019 12:10 PM

TRANSVERSE RIB STIFFENERS

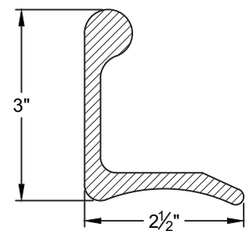

TYPE II RIB (CONTECH) TYPE 1 RIB (ASTM)
ALLOY 6061-T6
YIELD STRENGTH 35 KSI
TENSILE STRENGTH 38 KSI
AREA 1.71IN.²
CENTER OF AREA Yc = 1.02 IN.
PLASTIC MODULUS 1.70 IN.³
PLASTIC MOMENT Mp = 4.97 K-FT

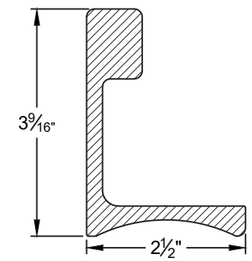

TYPE IV RIB (CONTECH) TYPE 2 RIB (ASTM)
ALLOY 6061-T6
YIELD STRENGTH 35 KSI
TENSILE STRENGTH 38 KSI
AREA 2.27IN.²
CENTER OF AREA Yc = 1.76 IN.
PLASTIC MODULUS 2.68 IN.³
PLASTIC MOMENT Mp = 7.81 K-FT

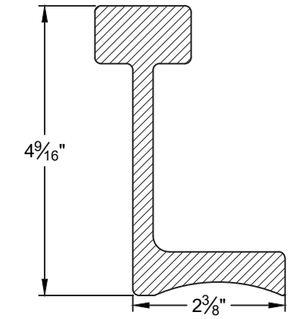

TYPE VI RIB (CONTECH) TYPE 3 RIB (ASTM)
ALLOY 6061-T6
YIELD STRENGTH 35 KSI
TENSILE STRENGTH 38 KSI
AREA 3.62IN.²
CENTER OF MASS Y Yc = 2.27 IN.
SECTION MODULUS 4.38 IN³
PLASTIC MODULUS 5.66 IN.³
PLASTIC MOMENT Mp = 16.52 K-FT

PLASTIC MOMENT CAPACITIES FOR PLATE-RIB COMBINATIONS

NO RIBS		
PLATE THICKNESS (IN.)	RIB TYPE/SPACING	Mp (kip-ft/ft)
0.125	NO RIBS	2.65
0.150	NO RIBS	3.18
0.175	NO RIBS	3.71
0.200	NO RIBS	4.24
0.225	NO RIBS	4.77
0.250	NO RIBS	5.30

TYPE II		
PLATE THICKNESS (IN.)	RIB TYPE/SPACING	Mp (kip-ft/ft)
0.125	TYPE II @ 18"	7.41
0.150	TYPE II @ 18"	8.66
0.175	TYPE II @ 18"	9.48
0.200	TYPE II @ 18"	10.26
0.225	TYPE II @ 18"	11.00
0.250	TYPE II @ 18"	11.71
0.125	TYPE II @ 27"	6.18
0.150	TYPE II @ 27"	7.25
0.175	TYPE II @ 27"	7.94
0.200	TYPE II @ 27"	8.60
0.225	TYPE II @ 27"	9.25
0.250	TYPE II @ 27"	9.87
0.125	TYPE II @ 54"	4.62
0.150	TYPE II @ 54"	5.46
0.175	TYPE II @ 54"	6.04
0.200	TYPE II @ 54"	6.61
0.225	TYPE II @ 54"	7.17
0.250	TYPE II @ 54"	7.74
0.125	TYPE II @ 9"	10.63
0.150	TYPE II @ 9"	12.13
0.175	TYPE II @ 9"	13.08
0.200	TYPE II @ 9"	14.05
0.225	TYPE II @ 9"	15.03
0.250	TYPE II @ 9"	16.02

TYPE IV		
PLATE THICKNESS (IN.)	RIB TYPE/SPACING	Mp (kip-ft/ft)
0.125	TYPE IV @ 18"	10.42
0.150	TYPE IV @ 18"	11.90
0.175	TYPE IV @ 18"	12.84
0.200	TYPE IV @ 18"	13.72
0.225	TYPE IV @ 18"	14.57
0.250	TYPE IV @ 18"	15.39
0.125	TYPE IV @ 27"	8.32
0.150	TYPE IV @ 27"	9.59
0.175	TYPE IV @ 27"	10.39
0.200	TYPE IV @ 27"	11.14
0.225	TYPE IV @ 27"	11.85
0.250	TYPE IV @ 27"	12.55
0.125	TYPE IV @ 54"	5.87
0.150	TYPE IV @ 54"	6.82
0.175	TYPE IV @ 54"	7.43
0.200	TYPE IV @ 54"	8.04
0.225	TYPE IV @ 54"	8.63
0.250	TYPE IV @ 54"	9.21
0.125	TYPE IV @ 9"	16.45
0.150	TYPE IV @ 9"	18.46
0.175	TYPE IV @ 9"	19.41
0.200	TYPE IV @ 9"	20.38
0.225	TYPE IV @ 9"	21.37
0.250	TYPE IV @ 9"	22.37

TYPE VI		
PLATE THICKNESS (IN.)	RIB TYPE/SPACING	Mp (kip-ft/ft)
0.125	TYPE VI @ 18"	18.15
0.150	TYPE VI @ 18"	19.28
0.175	TYPE VI @ 18"	20.37
0.200	TYPE VI @ 18"	21.13
0.225	TYPE VI @ 18"	22.43
0.250	TYPE VI @ 18"	23.44
0.125	TYPE VI @ 27"	13.92
0.150	TYPE VI @ 27"	15.19
0.175	TYPE VI @ 27"	15.60
0.200	TYPE VI @ 27"	16.80
0.225	TYPE VI @ 27"	17.74
0.250	TYPE VI @ 27"	18.63
0.125	TYPE VI @ 54"	9.07
0.150	TYPE VI @ 54"	9.88
0.175	TYPE VI @ 54"	10.58
0.200	TYPE VI @ 54"	11.27
0.225	TYPE VI @ 54"	11.94
0.250	TYPE VI @ 54"	12.62
0.125	TYPE VI @ 9"	30.48
0.150	TYPE VI @ 9"	31.78
0.175	TYPE VI @ 9"	33.08
0.200	TYPE VI @ 9"	34.37
0.225	TYPE VI @ 9"	35.65
0.250	TYPE VI @ 9"	36.99

10 / 18 / 2019

PennDOT Drawing Number:
2013-224 PE

The design and information shown on this drawing is provided as a service to the project owner, engineer and contractor by Contech Engineered Solutions LLC ("Contech"). Neither this drawing, nor any part thereof, may be used, reproduced or modified in any manner without the prior written consent of Contech. Failure to comply is done at the user's own risk and Contech expressly disclaims any liability or responsibility for such use.

If discrepancies between the supplied information upon which the drawing is based and actual field conditions are encountered as site work progresses, these discrepancies must be reported to Contech immediately for re-evaluation of the design. Contech accepts no liability for designs based on missing, incomplete or inaccurate information supplied by others.

MARK	DATE	REVISION DESCRIPTION	BY
4	8/12/2019	REVISIONS PER 8-2-19 COMMENTS	SCC
3	5/30/2019	REVISED PER PENNDOT COMMENTS	SCC
2	1/16/2015	REVISED PER PENNDOT COMMENTS	SCC
1	10/15/2014	REVISED PER PENNDOT COMMENTS	SCC

CONTECH ENGINEERED SOLUTIONS LLC
www.ContechES.com
9025 Centre Pointe Dr., Suite 400, West Chester, OH 45069
800-338-1122 513-645-7000 513-645-7993 FAX

CONTECH STRUCTURAL PLATE

ALUMINUM STRUCTURAL PLATE
BOX CULVERTS

PROJECT No.:	SEQ. No.:	DATE:
	001	9/12/2013
DESIGNED:	DRAWN: SCC	
CHECKED: BDH/MJO	APPROVED:	
SHEET NO.: 3 OF 10		

H:\DRAINAGE PLATE AND SPECIALTY ENGINEERING\SPECIFICATIONS,REGULATORY,REFERENCES & RESOURCES\STATE & FEDERAL SPECS\PENNDOT\PENNDOT ALBC\MAY 2019\PENNDOT ALBC DRAWING SUBMITTAL-2.DWG 8/12/2019 12:10 PM

ALUMINUM STRUCTURAL PLATE BOX CULVERT HEIGHTS OF COVER

SOIL DENSITY = 140 pcf, 40 kips SINGLE AXLE.

COVER HEIGHTS BASED ON AASHTO LRFD BRIDGE DESIGN SPECIFICATIONS AS MODIFIED BY APPLICABLE REQUIREMENTS CONTAINED IN THE CURRENT PENNDOT DESIGN MANUAL PART 4.

RIB-h = HAUNCH RIB TYPE
RIB-c = CROWN RIB TYPE
HG = HAUNCH PLATE THICKNESS

HRS = HAUNCH RIB SPACING
CRS = CROWN RIB SPACING
CG = CROWN PLATE THICKNESS
HOC = FROM BOX CULVERT RISE TO THE TOP OF RIGID PAVEMENT OR THE BOTTOM OF FLEXIBLE PAVEMENT.

Structure Number	Span *ft-in*	Rise *ft-in*	HG *Ga*	CG *Ga*	RIB-h *type*	RIB-c *type*	HRS *in*	CRS *in*	HOC-min *ft*	HOC-max *ft*
1 D6	8'-9"	2'-6"	0.125	0.125	II	IV	54	18	1.6	5.0
1 E6	8'-9"	2'-6"	0.150	0.150	II	IV	54	18	1.4	5.0
2 D6	9'-2"	3'-3"	0.125	0.125	II	IV	54	18	1.8	5.0
2 E6	9'-2"	3'-3"	0.150	0.150	II	IV	54	18	1.4	5.0
3 D6	9'-7"	4'-1"	0.125	0.125	II	IV	54	18	2.1	5.0
3 E6	9'-7"	4'-1"	0.150	0.150	II	IV	54	18	1.5	5.0
3 Penn	9'-7"	4'-1"	0.175	0.175	II	IV	54	18	1.4	5.0
4 D6	10'-0"	4'-10"	0.125	0.125	II	IV	54	18	2.3	5.0
4 E6	10'-0"	4'-10"	0.125	0.125	II	IV	54	9	1.4	5.0
5 D6	10'-6"	5'-7"	0.125	0.125	II	IV	54	18	2.6	5.0
5 E6	10'-6"	5'-7"	0.125	0.125	II	IV	54	9	1.5	5.0
5 Penn	10'-6"	5'-7"	0.150	0.150	II	IV	54	9	1.4	5.0
6 D6	10'-11"	6'-4"	0.125	0.125	II	IV	54	18	2.8	5.0
6 E6	10'-11"	6'-4"	0.125	0.125	II	IV	54	9	2.0	5.0
6 F6	10'-11"	6'-4"	0.150	0.150	II	IV	54	9	1.4	5.0
7 D6	11'-4"	7'-2"	0.125	0.125	II	IV	54	18	3.1	5.0
7 E6	11'-4"	7'-2"	0.125	0.125	II	IV	27	18	2.6	5.0
7 F6	11'-4"	7'-2"	0.150	0.150	II	IV	54	9	1.4	5.0
8 D6	10'-2"	2'-8"	0.125	0.125	II	IV	54	18	2.4	5.0
8 E6	10'-2"	2'-8"	0.150	0.150	II	IV	54	18	1.8	5.0
8 F6	10'-2"	2'-8"	0.175	0.175	II	IV	54	18	1.4	5.0
9 D6	10'-7"	3'-5"	0.125	0.125	II	IV	54	18	2.6	5.0
9 E6	10'-7"	3'-5"	0.150	0.150	II	IV	54	18	2.0	5.0
9 F6	10'-7"	3'-5"	0.150	0.150	II	IV	27	18	1.5	5.0
9 Penn	10'-7"	3'-5"	0.175	0.175	II	IV	27	18	1.4	5.0
10 D6	10'-11"	4'-3"	0.125	0.125	II	IV	54	18	2.8	5.0
10 E6	10'-11"	4'-3"	0.150	0.150	II	IV	54	18	2.2	5.0
10 F6	10'-11"	4'-3"	0.150	0.150	II	IV	54	9	1.4	5.0
11 D6	11'-4"	5'-0"	0.125	0.125	II	IV	54	18	3.1	5.0
11 E6	11'-4"	5'-0"	0.150	0.150	II	IV	54	18	2.4	5.0
11 F6	11'-4"	5'-0"	0.150	0.150	II	IV	54	9	1.4	5.0

Structure Number	Span *ft-in*	Rise *ft-in*	HG *Ga*	CG *Ga*	RIB-h *type*	RIB-c *type*	HRS *in*	CRS *in*	HOC-min *ft*	HOC-max *ft*
12 D6	11'-8"	5'-9"	0.125	0.125	II	IV	54	18	3.4	5.0
12 E6	11'-8"	5'-9"	0.150	0.150	II	IV	54	18	2.6	5.0
12 F6	11'-8"	5'-9"	0.150	0.150	II	IV	54	9	1.4	5.0
13 D6	12'-1"	6'-7"	0.150	0.150	II	IV	54	18	2.8	5.0
13 E6	12'-1"	6'-7"	0.150	0.150	II	IV	27	18	2.3	5.0
13 F6	12'-1"	6'-7"	0.150	0.150	II	IV	27	9	1.4	5.0
14 D6	12'-5"	7'-4"	0.125	0.125	II	IV	27	18	3.4	5.0
14 E6	12'-5"	7'-4"	0.125	0.125	II	IV	27	9	1.9	5.0
14 F6	12'-5"	7'-4"	0.150	0.150	II	IV	27	9	1.4	5.0
15 D6	11'-7"	2'-10"	0.125	0.125	II	IV	54	18	3.3	5.0
15 E6	11'-7"	2'-10"	0.150	0.150	II	IV	54	18	2.6	5.0
15 F6	11'-7"	2'-10"	0.150	0.150	II	IV	54	9	1.4	5.0
16 D6	11'-11"	3'-7"	0.150	0.150	II	IV	54	18	2.7	5.0
16 E6	11'-11"	3'-7"	0.150	0.150	II	IV	27	18	2.2	5.0
16 F6	11'-11"	3'-7"	0.150	0.150	II	IV	54	9	1.5	5.0
16 Penn	11'-11"	3'-7"	0.175	0.175	II	IV	54	9	1.4	5.0
17 D6	12'-3"	4'-5"	0.150	0.150	II	IV	54	18	2.9	5.0
17 E6	12'-3"	4'-5"	0.175	0.175	II	IV	54	18	2.5	5.0
17 F6	12'-3"	4'-5"	0.175	0.175	II	IV	54	9	1.4	5.0
18 D6	12'-7"	5'-2"	0.150	0.150	II	IV	54	18	3.2	5.0
18 E6	12'-7"	5'-2"	0.150	0.150	II	IV	27	18	2.6	5.0
18 F6	12'-7"	5'-2"	0.175	0.175	II	IV	54	9	1.5	5.0
18 Penn	12'-7"	5'-2"	0.200	0.200	II	IV	54	9	1.4	5.0
19 D6	12'-11"	6'-0"	0.150	0.150	II	IV	27	18	2.8	5.0
19 E6	12'-11"	6'-0"	0.125	0.125	II	IV	27	9	2.1	5.0
19 F6	12'-11"	6'-0"	0.175	0.175	II	IV	27	9	1.4	5.0
20 E6	13'-3"	6'-9"	0.125	0.125	II	IV	27	9	2.3	5.0
20 F6	13'-3"	6'-9"	0.150	0.150	II	IV	18	9	1.4	5.0
21 D6	13'-0"	3'-0"	0.150	0.150	II	VI	54	18	2.6	5.0
21 E6	13'-0"	3'-0"	0.125	0.125	II	VI	27	18	1.9	5.0
21 F6	13'-0"	3'-0"	0.150	0.150	II	VI	27	18	1.4	5.0
22 D6	13'-4"	3'-10"	0.150	0.150	II	VI	54	18	3.0	3.9
22 E6	13'-4"	3'-10"	0.125	0.125	II	VI	27	18	2.0	5.0
22 F6	13'-4"	3'-10"	0.175	0.175	II	VI	27	18	1.4	5.0

10 / 18 / 2019

PennDOT Drawing Number:
2013-224 PE

The design and information shown on this drawing is provided as a service to the project owner, engineer and contractor by Contech Engineered Solutions LLC ("Contech"). Neither this drawing, nor any part thereof, may be used, reproduced or modified in any manner without the prior written consent of Contech. Failure to comply is done at the user's own risk and Contech expressly disclaims any liability or responsibility for such use.

If discrepancies between the supplied information upon which the drawing is based and actual field conditions are encountered as site work progresses, these discrepancies must be reported to Contech immediately for re-evaluation of the design. Contech accepts no liability for designs based on missing, incomplete or inaccurate information supplied by others.

MARK	DATE	REVISION DESCRIPTION	BY
4	8/12/2019	REVISIONS PER 8-2-19 COMMENTS	SCC
3	5/30/2019	REVISED PER PENNDOT COMMENTS	SCC
2	1/16/2015	REVISED PER PENNDOT COMMENTS	SCC
1	10/15/2014	REVISED PER PENNDOT COMMENTS	SCC

CONTECH ENGINEERED SOLUTIONS LLC
www.ContechES.com
9025 Centre Pointe Dr., Suite 400, West Chester, OH 45069
800-338-1122 513-645-7000 513-645-7993 FAX

CONTECH STRUCTURAL PLATE

ALUMINUM STRUCTURAL PLATE
BOX CULVERTS

PROJECT No.:	SEQ. No.: 001	DATE: 9/12/2013
DESIGNED:	DRAWN: SCC	
CHECKED: BDH/MJO	APPROVED:	
SHEET NO.: 4 OF 10		

H:\DRAINAGE PLATE AND SPECIALTY ENGINEERING\SPECIFICATIONS,REGULATORY,REFERENCES & RESOURCES\STATE & FEDERAL SPECS\PENNDOT\PENNDOT ALBC\MAY 2019\PENNDOT ALBC DRAWING SUBMITTAL-2.DWG 8/12/2019 12:10 PM

ALUMINUM STRUCTURAL PLATE BOX CULVERT HEIGHTS OF COVER

SOIL DENSITY = 140 pcf, 40 kips SINGLE AXLE.

COVER HEIGHTS BASED ON AASHTO LRFD BRIDGE DESIGN SPECIFICATIONS AS MODIFIED BY APPLICABLE REQUIREMENTS CONTAINED IN THE CURRENT PENNDOT DESIGN MANUAL PART 4.

RIB-h = HAUNCH RIB TYPE
RIB-c = CROWN RIB TYPE
HG = HAUNCH PLATE THICKNESS

HRS = HAUNCH RIB SPACING
CRS = CROWN RIB SPACING
CG = CROWN PLATE THICKNESS
HOC = FROM BOX CULVERT RISE TO THE TOP OF RIGID PAVEMENT OR THE BOTTOM OF FLEXIBLE PAVEMENT.

Structure Number	Span *ft-in*	Rise *ft-in*	HG *Ga*	CG *Ga*	RIB-h *type*	RIB-c *type*	HRS *in*	CRS *in*	HOC-min *ft*	HOC-max *ft*
23 E6	13'-7"	4'-7"	0.125	0.125	II	VI	27	18	2.1	5.0
23 F6	13'-7"	4'-7"	0.150	0.150	II	VI	18	18	1.4	5.0
24 E6	13'-10"	5'-5"	0.125	0.125	II	VI	27	18	2.4	5.0
24 F6	13'-10"	5'-5"	0.150	0.150	II	VI	18	18	1.5	5.0
24 Penn	13'-10"	5'-5"	0.175	0.175	II	VI	18	18	1.4	5.0
25 D6	14'-1"	6'-2"	0.125	0.125	II	VI	27	18	2.6	5.0
25 E6	14'-1"	6'-2"	0.125	0.125	II	VI	18	18	2.1	5.0
25 F6	14'-1"	6'-2"	0.150	0.150	II	VI	18	18	1.6	5.0
25 Penn	14'-1"	6'-2"	0.175	0.175	II	VI	18	18	1.4	5.0
26 D6	14'-5"	3'-3"	0.125	0.125	II	VI	18	18	2.9	3.9
26 E6	14'-5"	3'-3"	0.125	0.125	II	VI	18	18	2.2	5.0
26 F6	14'-5"	3'-3"	0.175	0.175	II	VI	18	18	1.5	5.0
26 Penn	14'-5"	3'-3"	0.200	0.200	II	VI	18	18	1.4	5.0
27 E6	14'-8"	4'-1"	0.125	0.125	II	VI	18	18	2.4	5.0
27 F6	14'-8"	4'-1"	0.175	0.200	II	VI	18	18	1.5	5.0
27 Penn	14'-8"	4'-1"	0.200	0.200	II	VI	18	18	1.4	5.0
28 E6	14'-10"	4'-10"	0.125	0.125	II	VI	18	18	2.4	5.0
28 F6	14'-10"	4'-10"	0.175	0.225	II	VI	18	18	1.4	5.0
29 E6	15'-1"	5'-8"	0.125	0.125	II	VI	18	18	2.5	5.0
29 F6	15'-1"	5'-8"	0.175	0.250	II	VI	18	18	1.4	5.0
30 D6	15'-4"	6'-5"	0.150	0.150	II	VI	27	18	2.5	5.0
30 E6	15'-4"	6'-5"	0.125	0.125	II	VI	18	18	2.7	5.0
30 F6	15'-4"	6'-5"	0.200	0.250	II	VI	18	18	1.4	5.0
31 D6	15'-6"	7'-3"	0.150	0.150	II	VI	27	18	2.6	5.0
31 E6	15'-6"	7'-3"	0.125	0.125	II	VI	18	18	2.7	5.0
31 F6	15'-6"	7'-3"	0.200	0.250	II	VI	18	18	1.4	5.0
32 D6	15'-9"	8'-0"	0.150	0.150	II	VI	27	18	2.7	4.7
32 E6	15'-9"	8'-0"	0.125	0.125	II	VI	18	18	2.9	5.0
32 F6	15'-9"	8'-0"	0.200	0.250	II	VI	18	18	1.5	5.0
32 Penn	15'-9"	8'-0"	0.225	0.250	II	VI	18	18	1.4	5.0
33 D6	15'-10"	3'-6"	0.125	0.125	II	VI	18	18	2.9	5.0
33 E6	15'-10"	3'-6"	0.225	0.125	II	VI	18	18	2.1	5.0
33 F6	15'-10"	3'-6"	0.250	0.200	II	VI	18	18	1.5	5.0
33 Penn	15'-10"	3'-6"	0.250	0.225	II	VI	18	18	1.4	5.0
34 D6	16'-0"	4'-3"	0.125	0.125	II	VI	18	18	3.0	4.6
34 E6	16'-0"	4'-3"	0.225	0.125	II	VI	18	18	2.2	5.0
34 F6	16'-0"	4'-3"	0.250	0.225	II	VI	18	18	1.4	5.0
35 D6	16'-2"	5'-1"	0.125	0.125	II	VI	18	18	3.1	3.9
35 E6	16'-2"	5'-1"	0.225	0.125	II	VI	18	18	2.3	5.0
35 F6	16'-2"	5'-1"	0.250	0.250	II	VI	18	18	1.4	5.0

Structure Number	Span *ft-in*	Rise *ft-in*	HG *Ga*	CG *Ga*	RIB-h *type*	RIB-c *type*	HRS *in*	CRS *in*	HOC-min *ft*	HOC-max *ft*
36 D6	16'-4"	5'-11"	0.125	0.125	II	VI	18	18	3.3	3.6
36 E6	16'-4"	5'-11"	0.225	0.125	II	VI	18	18	2.4	5.0
36 F6	16'-4"	5'-11"	0.250	0.250	II	VI	18	18	1.4	5.0
37 E6	16'-6"	6'-8"	0.225	0.125	II	VI	18	18	2.5	5.0
37 F6	16'-6"	6'-8"	0.175	0.200	II	VI	9	18	1.6	5.0
37 Penn	16'-6"	6'-8"	0.200	0.200	II	VI	9	18	1.4	5.0
38 E6	16'-8"	7'-6"	0.225	0.125	II	VI	18	18	2.5	5.0
38 F6	16'-8"	7'-6"	0.175	0.250	II	VI	9	18	1.4	5.0
39 E6	16'-10"	8'-3"	0.225	0.125	II	VI	18	18	2.6	5.0
39 F6	16'-10"	8'-3"	0.175	0.250	II	VI	9	18	1.4	5.0
40 E6	17'-9"	3'-10"	0.125	0.125	VI	VI	27	18	2.4	5.0
40 F6	17'-9"	3'-10"	0.125	0.125	VI	VI	18	18	1.8	5.0
40 Penn	17'-9"	3'-10"	0.125	0.175	VI	VI	18	18	1.4	5.0
41 D6	18'-2"	4'-7"	0.125	0.125	VI	VI	27	18	2.7	5.0
41 E6	18'-2"	4'-7"	0.125	0.125	VI	VI	18	18	2.0	5.0
41 F6	18'-2"	4'-7"	0.125	0.150	VI	VI	18	18	1.7	5.0
41 Penn	18'-2"	4'-7"	0.125	0.200	VI	VI	18	18	1.4	5.0
42 D6	18'-7"	5'-4"	0.125	0.125	VI	VI	27	18	2.9	4.8
42 E6	18'-7"	5'-4"	0.125	0.125	VI	VI	18	18	2.1	5.0
42 F6	18'-7"	5'-4"	0.125	0.200	VI	VI	18	18	1.5	5.0
42 Penn	18'-7"	5'-4"	0.125	0.225	VI	VI	18	18	1.4	5.0
43 D6	19'-0"	6'-1"	0.125	0.125	VI	VI	27	18	3.2	3.9
43 E6	19'-0"	6'-1"	0.125	0.125	VI	VI	18	18	2.2	5.0
43 F6	19'-0"	6'-1"	0.125	0.225	VI	VI	18	18	1.5	5.0
43 Penn	19'-0"	6'-1"	0.125	0.250	VI	VI	18	18	1.4	5.0
44 E6	19'-5"	6'-11"	0.125	0.125	VI	VI	18	18	2.4	5.0
44 F6	19'-5"	6'-11"	0.125	0.250	VI	VI	18	18	1.6	5.0
44 Penn	19'-5"	6'-11"	0.150	0.250	VI	VI	18	18	1.4	5.0
45 E6	19'-10"	7'-8"	0.125	0.125	VI	VI	18	18	2.6	5.0
45 F6	19'-10"	7'-8"	0.125	0.250	VI	VI	18	18	1.8	5.0
45 Penn	19'-10"	7'-8"	0.175	0.250	VI	VI	18	18	1.4	5.0
46 E6	20'-3"	8'-5"	0.125	0.125	VI	VI	18	18	2.8	4.6
46 F6	20'-3"	8'-5"	0.125	0.125	VI	VI	18	9	1.4	5.0

10 / 18 / 2019

PennDOT Drawing Number:
2013-224 PE

The design and information shown on this drawing is provided as a service to the project owner, engineer and contractor by Contech Engineered Solutions LLC ("Contech"). Neither this drawing, nor any part thereof, may be used, reproduced or modified in any manner without the prior written consent of Contech. Failure to comply is done at the user's own risk and Contech expressly disclaims any liability or responsibility for such use.

If discrepancies between the supplied information upon which the drawing is based and actual field conditions are encountered as site work progresses, these discrepancies must be reported to Contech immediately for re-evaluation of the design. Contech accepts no liability for designs based on missing, incomplete or inaccurate information supplied by others.

MARK	DATE	REVISION DESCRIPTION	BY
4	8/12/2019	REVISIONS PER 8-2-19 COMMENTS	SCC
3	5/30/2019	REVISED PER PENNDOT COMMENTS	SCC
2	1/16/2015	REVISED PER PENNDOT COMMENTS	SCC
1	10/15/2014	REVISED PER PENNDOT COMMENTS	SCC

CONTECH ENGINEERED SOLUTIONS LLC
www.ContechES.com
9025 Centre Pointe Dr., Suite 400, West Chester, OH 45069
800-338-1122 513-645-7000 513-645-7993 FAX

CONTECH STRUCTURAL PLATE

ALUMINUM STRUCTURAL PLATE
BOX CULVERTS

PROJECT No.:	SEQ. No.: 001	DATE: 9/12/2013
DESIGNED:	DRAWN: SCC	
CHECKED: BDH/MJO	APPROVED:	
SHEET NO.: 5 OF 10		

H:\DRAINAGE PLATE AND SPECIALTY ENGINEERING\SPECIFICATIONS,REGULATORY,REFERENCES & RESOURCES\STATE & FEDERAL SPECS\PENNDOT\PENNDOT ALBC\MAY 2019\PENNDOT ALBC DRAWING SUBMITTAL-2.DWG 8/12/2019 12:10 PM

ALUMINUM STRUCTURAL PLATE BOX CULVERT HEIGHTS OF COVER

SOIL DENSITY = 140 pcf, 40 kips SINGLE AXLE.

COVER HEIGHTS BASED ON AASHTO LRFD BRIDGE DESIGN SPECIFICATIONS AS MODIFIED BY APPLICABLE REQUIREMENTS CONTAINED IN THE CURRENT PENNDOT DESIGN MANUAL PART 4.

RIB-h = HAUNCH RIB TYPE
RIB-c = CROWN RIB TYPE
HG = HAUNCH PLATE THICKNESS

HRS = HAUNCH RIB SPACING
CRS = CROWN RIB SPACING
CG = CROWN PLATE THICKNESS
HOC = FROM BOX CULVERT RISE TO THE TOP OF RIGID PAVEMENT OR THE BOTTOM OF FLEXIBLE PAVEMENT.

Structure Number	Span *ft-in*	Rise *ft-in*	HG *Ga*	CG *Ga*	RIB-h *type*	RIB-c *type*	HRS *in*	CRS *in*	HOC-min *ft*	HOC-max *ft*
47 D6	19'-1"	4'-2"	0.125	0.125	VI	VI	27	18	3.3	3.8
47 E6	19'-1"	4'-2"	0.125	0.125	VI	VI	18	18	2.2	5.0
47 F6	19'-1"	4'-2"	0.125	0.125	VI	VI	18	9	1.4	5.0
48 E6	19'-5"	4'-11"	0.125	0.125	VI	VI	18	18	2.4	5.0
48 F6	19'-5"	4'-11"	0.125	0.125	VI	VI	18	9	1.4	5.0
49 E6	19'-9"	5'-8"	0.125	0.125	VI	VI	18	18	2.6	5.0
49 F6	19'-9"	5'-8"	0.125	0.125	VI	VI	18	9	1.4	5.0
50 E6	20'-1"	6'-6"	0.125	0.125	VI	VI	18	18	2.7	4.8
50 F6	20'-1"	6'-6"	0.125	0.125	VI	VI	18	9	1.4	5.0
51 E6	20'-6"	7'-3"	0.125	0.125	VI	VI	18	18	2.9	4.3
51 F6	20'-6"	7'-3"	0.125	0.125	VI	VI	18	9	1.4	5.0
52 E6	20'-10"	8'-1"	0.125	0.125	VI	VI	18	18	3.1	3.8
52 F6	20'-10"	8'-1"	0.125	0.125	VI	VI	18	9	1.4	5.0
53 E6	21'-2"	8'-10"	0.125	0.250	VI	VI	18	18	2.2	5.0
53 F6	21'-2"	8'-10"	0.125	0.125	VI	VI	18	9	1.4	5.0
54 E6	20'-4"	4'-6"	0.125	0.125	VI	VI	18	18	2.8	4.5
54 F6	20'-4"	4'-6"	0.125	0.125	VI	VI	18	9	1.4	5.0
55 E6	20'-7"	5'-3"	0.125	0.125	VI	VI	18	18	2.9	4.1
55 F6	20'-7"	5'-3"	0.125	0.125	VI	VI	18	9	1.4	5.0
56 E6	20'-11"	6'-1"	0.125	0.125	VI	VI	18	18	3.2	3.7
56 F6	20'-11"	6'-1"	0.125	0.125	VI	VI	18	9	1.4	5.0
57 E6	21'-3"	6'-10"	0.125	0.250	VI	VI	18	18	2.2	5.0
57 F6	21'-3"	6'-10"	0.125	0.125	VI	VI	18	9	1.4	5.0
58 E6	21'-6"	7'-8"	0.125	0.250	VI	VI	18	18	2.3	5.0
58 F6	21'-6"	7'-8"	0.125	0.125	VI	VI	18	9	1.4	5.0
59 E6	21'-10"	8'-5"	0.125	0.250	VI	VI	18	18	2.4	5.0
59 F6	21'-10"	8'-5"	0.125	0.125	VI	VI	18	9	1.4	5.0
60 E6	22'-1"	9'-3"	0.125	0.250	VI	VI	18	18	2.5	4.9
60 F6	22'-1"	9'-3"	0.125	0.125	VI	VI	18	9	1.4	5.0

Structure Number	Span *ft-in*	Rise *ft-in*	HG *Ga*	CG *Ga*	RIB-h *type*	RIB-c *type*	HRS *in*	CRS *in*	HOC-min *ft*	HOC-max *ft*
61 E6	21'-7"	4'-11"	0.125	0.250	VI	VI	18	18	2.3	5.0
61 F6	21'-7"	4'-11"	0.125	0.125	VI	VI	18	9	1.4	5.0
62 E6	21'-10"	5'-8"	0.125	0.250	VI	VI	18	18	2.4	5.0
62 F6	21'-10"	5'-8"	0.125	0.125	VI	VI	18	9	1.4	5.0
63 E6	22'-1"	6'-6"	0.125	0.250	VI	VI	18	18	2.5	4.9
63 F6	22'-1"	6'-6"	0.125	0.125	VI	VI	18	9	1.4	5.0
64 E6	22'-3"	7'-3"	0.125	0.250	VI	VI	18	18	2.5	4.7
64 F6	22'-3"	7'-3"	0.125	0.125	VI	VI	18	9	1.5	5.0
64 Penn	22'-3"	7'-3"	0.150	0.125	VI	VI	18	9	1.4	5.0
65 E6	22'-6"	8'-1"	0.125	0.250	VI	VI	18	18	2.6	4.5
65 F6	22'-6"	8'-1"	0.125	0.125	VI	VI	18	9	1.5	5.0
65 Penn	22'-6"	8'-1"	0.150	0.125	VI	VI	18	9	1.4	5.0
66 E6	22'-9"	8'-10"	0.125	0.250	VI	VI	18	18	2.7	4.3
66 F6	22'-9"	8'-10"	0.125	0.125	VI	VI	18	9	1.6	5.0
66 Penn	22'-9"	8'-10"	0.150	0.125	VI	VI	18	9	1.4	5.0
67 E6	23'-0"	9'-8"	0.125	0.250	VI	VI	18	18	2.8	4.0
67 F6	23'-0"	9'-8"	0.125	0.125	VI	VI	18	9	1.7	5.0
67 Penn	23'-0"	9'-8"	0.150	0.125	VI	VI	18	9	1.4	5.0

10 / 18 / 2019

PennDOT Drawing Number:
2013-224 PE

The design and information shown on this drawing is provided as a service to the project owner, engineer and contractor by Contech Engineered Solutions LLC ("Contech"). Neither this drawing, nor any part thereof, may be used, reproduced or modified in any manner without the prior written consent of Contech. Failure to comply is done at the user's own risk and Contech expressly disclaims any liability or responsibility for such use.

If discrepancies between the supplied information upon which the drawing is based and actual field conditions are encountered as site work progresses, these discrepancies must be reported to Contech immediately for re-evaluation of the design. Contech accepts no liability for designs based on missing, incomplete or inaccurate information supplied by others.

MARK	DATE	REVISION DESCRIPTION	BY
4	8/12/2019	REVISIONS PER 8-2-19 COMMENTS	SCC
3	5/30/2019	REVISED PER PENNDOT COMMENTS	SCC
2	1/16/2015	REVISED PER PENNDOT COMMENTS	SCC
1	10/15/2014	REVISED PER PENNDOT COMMENTS	SCC

CONTECH ENGINEERED SOLUTIONS LLC
www.ContechES.com
9025 Centre Pointe Dr., Suite 400, West Chester, OH 45069
800-338-1122 513-645-7000 513-645-7993 FAX

CONTECH STRUCTURAL PLATE

ALUMINUM STRUCTURAL PLATE
BOX CULVERTS

PROJECT No.:	SEQ. No.: 001	DATE: 9/12/2013
DESIGNED:	DRAWN: SCC	
CHECKED: BDH/MJO	APPROVED:	
SHEET NO.: 6 OF 10		

H:\DRAINAGE PLATE AND SPECIALTY ENGINEERING\SPECIFICATIONS,REGULATORY,REFERENCES & RESOURCES\STATE & FEDERAL SPECS\PENNDOT\PENNDOT ALBC\MAY 2019\PENNDOT ALBC DRAWING SUBMITTAL-2.DWG 8/12/2019 12:10 PM

ALUMINUM STRUCTURAL PLATE BOX CULVERT HEIGHTS OF COVER

SOIL DENSITY = 140 pcf, 40 kips SINGLE AXLE.

COVER HEIGHTS BASED ON AASHTO LRFD BRIDGE DESIGN SPECIFICATIONS AS MODIFIED BY APPLICABLE REQUIREMENTS CONTAINED IN THE CURRENT PENNDOT DESIGN MANUAL PART 4.

RIB-h = HAUNCH RIB TYPE
RIB-c = CROWN RIB TYPE
HG = HAUNCH PLATE THICKNESS

HRS = HAUNCH RIB SPACING
CRS = CROWN RIB SPACING
CG = CROWN PLATE THICKNESS
HOC = FROM BOX CULVERT RISE TO THE TOP OF RIGID PAVEMENT OR THE BOTTOM OF FLEXIBLE PAVEMENT.

Structure Number	Span ft-in	Rise ft-in	HG Ga	CG Ga	RIB-h type	RIB-c type	HRS in	CRS in	HOC-min ft	HOC-max ft
68 E6	22'-9"	5'-4"	0.125	0.250	VI	VI	18	18	2.7	4.3
68 F6	22'-9"	5'-4"	0.125	0.125	VI	VI	18	9	1.6	5.0
68 Penn	22'-9"	5'-4"	0.150	0.125	VI	VI	18	9	1.4	5.0
69 E6	23'-0"	6'-1"	0.125	0.250	VI	VI	18	18	2.8	4.0
69 F6	23'-0"	6'-1"	0.125	0.125	VI	VI	18	9	1.7	5.0
69 Penn	23'-0"	6'-1"	0.150	0.125	VI	VI	18	9	1.4	5.0
70 E6	23'-2"	6'-11"	0.125	0.250	VI	VI	18	18	2.9	3.9
70 F6	23'-2"	6'-11"	0.125	0.125	VI	VI	18	9	1.7	5.0
70 Penn	23'-2"	6'-11"	0.150	0.150	VI	VI	18	9	1.4	5.0
71 E6	23'-4"	7'-8"	0.125	0.250	VI	VI	18	18	2.9	3.9
71 F6	23'-4"	7'-8"	0.125	0.125	VI	VI	18	9	1.7	3.8
71 Penn	23'-4"	7'-8"	0.150	0.150	VI	VI	18	9	1.4	5.0
72 E6	23'-6"	8'-6"	0.125	0.250	VI	VI	18	18	3.0	3.7
72 F6	23'-6"	8'-6"	0.125	0.125	VI	VI	18	9	1.8	4.9
72 Penn	23'-6"	8'-6"	0.150	0.150	VI	VI	18	9	1.4	5.0

Structure Number	Span ft-in	Rise ft-in	HG Ga	CG Ga	RIB-h type	RIB-c type	HRS in	CRS in	HOC-min ft	HOC-max ft
73 E6	23'-8"	9'-3"	0.125	0.250	VI	VI	18	18	3.2	3.5
73 F6	23'-8"	9'-3"	0.125	0.125	VI	VI	18	9	1.8	4.8
73 Penn	23'-8"	9'-3"	0.150	0.150	VI	VI	18	9	1.4	5.0
74 F6	23'-10"	10'-1"	0.125	0.125	VI	VI	18	9	1.8	4.7
74 Penn	23'-10"	10'-1"	0.150	0.150	VI	VI	18	9	1.4	5.0
75 F6	24'-0"	5'-9"	0.125	0.125	VI	VI	18	9	1.9	4.6
75 Penn	24'-0"	5'-9"	0.175	0.150	VI	VI	18	9	1.4	5.0
76 F6	24'-1"	6'-6"	0.125	0.125	VI	VI	18	9	1.9	4.5
76 Penn	24'-1"	6'-6"	0.175	0.150	VI	VI	18	9	1.4	5.0
77 F6	24'-3"	7'-4"	0.125	0.125	VI	VI	18	9	1.9	4.4
77 Penn	24'-3"	7'-4"	0.175	0.150	VI	VI	18	9	1.4	5.0
78 F6	24'-4"	8'-2"	0.125	0.125	VI	VI	18	9	1.9	4.3
78 Penn	24'-4"	8'-2"	0.175	0.150	VI	VI	18	9	1.4	5.0
79 F6	24'-5"	8'-11"	0.125	0.125	VI	VI	18	9	2.0	4.3
79 Penn	24'-5"	8'-11"	0.125	0.125	VI	VI	18	9	1.4	5.0
80 F6	24'-7"	9'-9"	0.125	0.125	VI	VI	18	9	2.0	4.2
80 Penn	24'-7"	9'-9"	0.175	0.150	VI	VI	18	9	1.4	5.0
81 F6	24'-8"	10'-6"	0.125	0.125	VI	VI	18	9	2.1	4.1
81 Penn	24'-8"	10'-6"	0.175	0.150	VI	VI	18	9	1.4	5.0
82 E6	25'-2"	6'-2"	0.125	0.125	VI	VI	18	9	2.1	3.9
82 Penn	25'-2"	6'-2"	0.175	0.150	VI	VI	18	9	1.4	5.0
83 E6	25'-2"	7'-0"	0.125	0.125	VI	VI	18	9	2.1	3.9
83 Penn	25'-2"	7'-0"	0.175	0.150	VI	VI	18	9	1.4	5.0
84 E6	25'-3"	7'-9"	0.125	0.125	VI	VI	18	9	2.1	3.8
84 Penn	25'-3"	7'-9"	0.175	0.175	VI	VI	18	9	1.4	5.0
85 E6	25'-4"	8'-7"	0.125	0.125	VI	VI	18	9	2.2	3.8
85 Penn	25'-4"	8'-7"	0.175	0.175	VI	VI	18	9	1.4	5.0
86 E6	25'-4"	9'-5"	0.125	0.125	VI	VI	18	9	2.2	3.8
86 Penn	25'-4"	9'-5"	0.175	0.175	VI	VI	18	9	2.2	3.8
87 E6	25'-5"	10'-2"	0.125	0.125	VI	VI	18	9	2.2	3.8
87 Penn	25'-5"	10'-2"	0.175	0.175	VI	VI	18	9	1.4	5.0

10 / 18 / 2019

PennDOT Drawing Number:
2013-224 PE

The design and information shown on this drawing is provided as a service to the project owner, engineer and contractor by Contech Engineered Solutions LLC ("Contech"). Neither this drawing, nor any part thereof, may be used, reproduced or modified in any manner without the prior written consent of Contech. Failure to comply is done at the user's own risk and Contech expressly disclaims any liability or responsibility for such use.

If discrepancies between the supplied information upon which the drawing is based and actual field conditions are encountered as site work progresses, these discrepancies must be reported to Contech immediately for re-evaluation of the design. Contech accepts no liability for designs based on missing, incomplete or inaccurate information supplied by others.

MARK	DATE	REVISION DESCRIPTION	BY
4	8/12/2019	REVISIONS PER 8-2-19 COMMENTS	SCC
3	5/30/2019	REVISED PER PENNDOT COMMENTS	SCC
2	1/16/2015	REVISED PER PENNDOT COMMENTS	SCC
1	10/15/2014	REVISED PER PENNDOT COMMENTS	SCC

CONTECH ENGINEERED SOLUTIONS LLC
www.ContechES.com
9025 Centre Pointe Dr., Suite 400, West Chester, OH 45069
800-338-1122 513-645-7000 513-645-7993 FAX

CONTECH STRUCTURAL PLATE

ALUMINUM STRUCTURAL PLATE
BOX CULVERTS

PROJECT No.:	SEQ. No.: 001	DATE: 9/12/2013
DESIGNED:	DRAWN: SCC	
CHECKED: BDH/MJO	APPROVED:	
SHEET NO.: 7 OF 10		

H:\DRAINAGE PLATE AND SPECIALTY ENGINEERING\SPECIFICATIONS,REGULATORY,REFERENCES & RESOURCES\STATE & FEDERAL SPECS\PENNDOT\PENNDOT ALBC\MAY 2019\PENNDOT ALBC DRAWING SUBMITTAL-2.DWG 8/12/2019 12:10 PM

ALUMINUM FULL INVERT OPTION

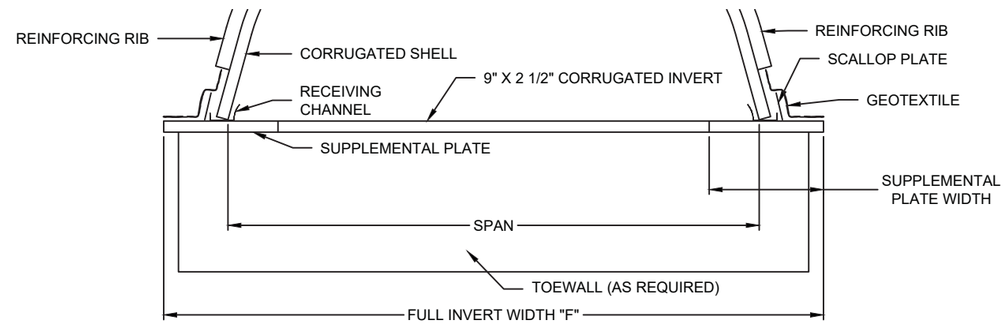

(1) FULL INVERT PLATE THICKNESS SHALL BE CALCULATED BASED ON REQUIRED SERVICE LIFE AND SITE CONDITIONS IN ACCORDANCE WITH THE METHODS DETAILED IN PENNDOT DM-4 (D12.6.9)
(2) SUBJECT TO PENNDOT APPROVAL, CONCRETE PAVED INVERTS MAY BE USED TO MEET SERVICE LIFE REQUIREMENTS WHEN DESIGNED CONSISTENT WITH PENNDOT STANDARDS FOR BRIDGE CONSTRUCTION (PUB 218M, BD 635M).
(3) WHEN REACTIONS TO THE INVERT REQUIRE ADDITIONAL THICKNESS, SUPPLEMENTAL PLATES OF CALCULATED THICKNESS AND WIDTH ARE FURNISHED TO BOLT BETWEEN THE INVERT PLATE AND RECEIVING CHANNEL.
(4) N = 9.625".

STRUCTURE No.	INVERT WIDTH "F" (N)
1	13
2	14
3	14
4	15
5	16
6	16
7	17
8	15
9	16
10	16
11	17
12	17
13	18
14	18
15	17
16	17
17	18
18	18
19	19

STRUCTURE No.	INVERT WIDTH "F" (N)
20	19
21	19
22	19
23	19
24	20
25	20
26	20
27	21
28	21
29	21
30	22
31	22
32	22
33	22
34	22
35	23
36	23
37	23
38	23

STRUCTURE No.	INVERT WIDTH "F" (N)
39	24
40	26
41	26
42	27
43	27
44	28
45	28
46	29
47	27
48	28
49	28
50	29
51	29
52	29
53	30
54	29
55	29
56	30
57	30

STRUCTURE No.	INVERT WIDTH "F" (N)
58	30
59	31
60	31
61	30
62	31
63	31
64	31
65	32
66	32
67	32
68	32
69	32
70	32
71	33
72	33
73	33
74	33
75	33
76	34

STRUCTURE No.	INVERT WIDTH "F" (N)
77	34
78	34
79	34
80	34
81	34
82	35
83	35
84	35
85	36
86	36
87	36

10 / 18 / 2019

PennDOT Drawing Number:
2013-224 PE

The design and information shown on this drawing is provided as a service to the project owner, engineer and contractor by Contech Engineered Solutions LLC ("Contech"). Neither this drawing, nor any part thereof, may be used, reproduced or modified in any manner without the prior written consent of Contech. Failure to comply is done at the user's own risk and Contech expressly disclaims any liability or responsibility for such use.

If discrepancies between the supplied information upon which the drawing is based and actual field conditions are encountered as site work progresses, these discrepancies must be reported to Contech immediately for re-evaluation of the design. Contech accepts no liability for designs based on missing, incomplete or inaccurate information supplied by others.

MARK	DATE	REVISION DESCRIPTION	BY
4	8/12/2019	REVISIONS PER 8-2-19 COMMENTS	SCC
3	5/30/2019	REVISED PER PENNDOT COMMENTS	SCC
2	1/16/2015	REVISED PER PENNDOT COMMENTS	SCC
1	10/15/2014	REVISED PER PENNDOT COMMENTS	SCC

CONTECH ENGINEERED SOLUTIONS LLC
www.ContechES.com
9025 Centre Pointe Dr., Suite 400, West Chester, OH 45069
800-338-1122 513-645-7000 513-645-7993 FAX

CONTECH STRUCTURAL PLATE

ALUMINUM STRUCTURAL PLATE
BOX CULVERTS

PROJECT No.:	SEQ. No.: 001	DATE: 9/12/2013
DESIGNED:	DRAWN: SCC	
CHECKED: BDH/MJO	APPROVED:	
SHEET NO.: 8 OF 10		

H:\DRAINAGE PLATE AND SPECIALTY ENGINEERING\SPECIFICATIONS,REGULATORY,REFERENCES & RESOURCES\STATE & FEDERAL SPECS\PENNDOT\PENNDOT ALBC\MAY 2019\PENNDOT ALBC DRAWING SUBMITTAL-2.DWG 8/12/2019 12:10 PM

SCALLOP PLATE ENCLOSURE
(FULL INVERT ONLY)
3004-H34 ALUMINUM

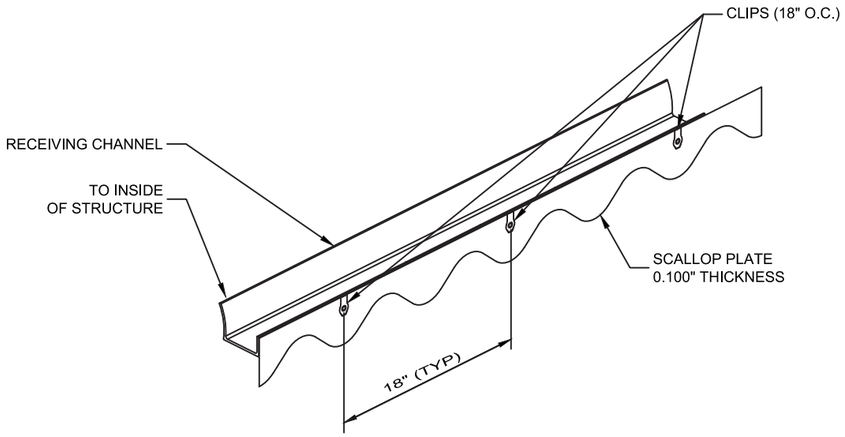

ANCHOR AND HOOK BOLT

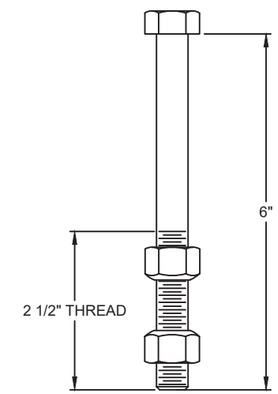

TYPICAL 6" ANCHOR BOLT

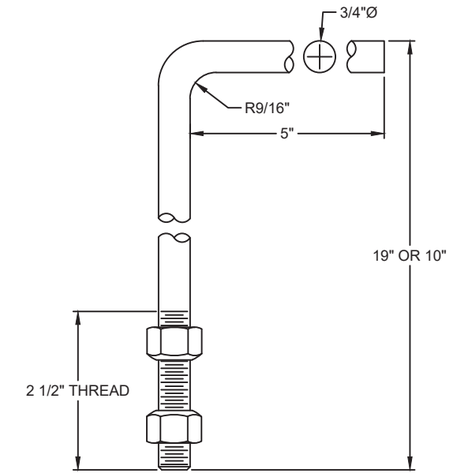

TYPICAL HOOK BOLT

1. TYPICAL 6" ANCHOR AND HOOK BOLTS AS REQUIRED FOR ANCHORING THE BOX CULVERT ENDS INTO CONCRETE HEADWALLS, OTHER END TREATMENTS OR INTO FOOTING.
2. ANCHOR BOLTS SHALL CONFORM TO ASTM A307. NUTS SHALL CONFORM TO A563. ANCHOR BOLTS AND NUTS SHALL BE HOT DIP GALVANIZED IN ACCORDANCE WITH ASTM A153.

CONCRETE FOOTING OPTIONS

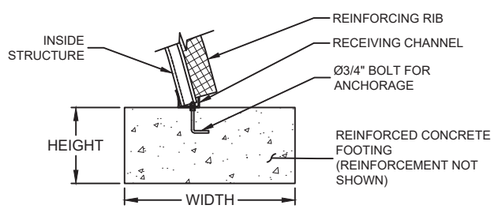

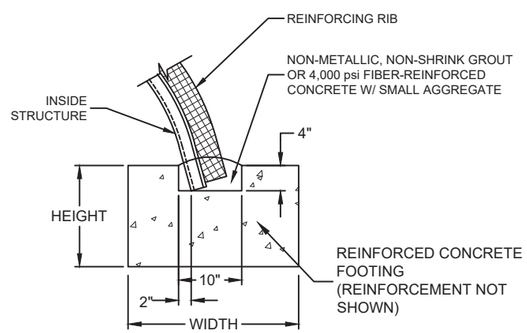

1. SIZE AND REINFORCING OF FOOTING TO BE CONTROLLED BY SOIL-BEARING CAPACITY AND LOADING CONDITIONS (DESIGNED BY OTHERS).
2. CONCRETE STRENGTH F'c ≥ 4000 PSI.
3. REINFORCING STEEL: ASTM A615 (REBAR) GRADE 60.

RECEIVING CHANNELS
6061-T6 ALLOY

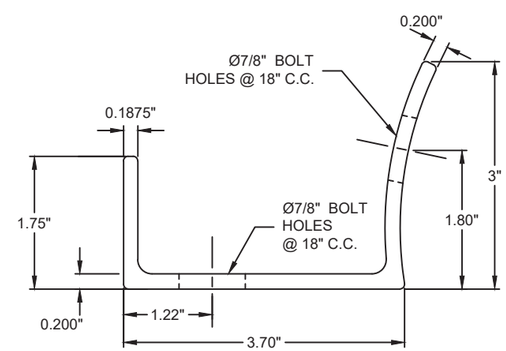

10 / 18 / 2019

PennDOT Drawing Number:
2013-224 PE

The design and information shown on this drawing is provided as a service to the project owner, engineer and contractor by Contech Engineered Solutions LLC ("Contech"). Neither this drawing, nor any part thereof, may be used, reproduced or modified in any manner without the prior written consent of Contech. Failure to comply is done at the user's own risk and Contech expressly disclaims any liability or responsibility for such use.

If discrepancies between the supplied information upon which the drawing is based and actual field conditions are encountered as site work progresses, these discrepancies must be reported to Contech immediately for re-evaluation of the design. Contech accepts no liability for designs based on missing, incomplete or inaccurate information supplied by others.

MARK	DATE	REVISION DESCRIPTION	BY
4	8/12/2019	REVISIONS PER 8-2-19 COMMENTS	SCC
3	5/30/2019	REVISED PER PENNDOT COMMENTS	SCC
2	1/16/2015	REVISED PER PENNDOT COMMENTS	SCC
1	10/15/2014	REVISED PER PENNDOT COMMENTS	SCC

CONTECH ENGINEERED SOLUTIONS LLC
www.ContechES.com
9025 Centre Pointe Dr., Suite 400, West Chester, OH 45069
800-338-1122 513-645-7000 513-645-7993 FAX

CONTECH STRUCTURAL PLATE

ALUMINUM STRUCTURAL PLATE
BOX CULVERTS

PROJECT No.:	SEQ. No.:	DATE:
	001	9/12/2013
DESIGNED:	DRAWN: SCC	
CHECKED: BDH/MJO	APPROVED:	
SHEET NO.: 9 OF 10		

H:\DRAINAGE PLATE AND SPECIALTY ENGINEERING\SPECIFICATIONS,REGULATORY,REFERENCES & RESOURCES\STATE & FEDERAL SPECS\PENNDOT\PENNDOT ALBC\MAY 2019\PENNDOT ALBC DRAWING SUBMITTAL-2.DWG 8/12/2019 12:10 PM

A. GENERAL

1. This specification covers the manufacture and installation of aluminum structural plate box culverts, consisting of aluminum structural plate, stiffening ribs, and appurtenances. Material and geometric requirements shall conform to AASHTO M219 and ASTM B864. Geometric requirements shall also conform to Figure 12.9.4.1-1 and Table 12.9.4.1-1 of the AASHTO LRFD Bridge Design Specifications. Box culvert dimensions, plate thicknesses, rib type and spacing, end treatment, and foundation (full invert or footings) shall be as indicated on project plans. Bolts and nuts shall conform to the requirements of ASTM A307 or ASTM A449 and shall be galvanized in accordance with ASTM A153.
2. Cover heights shown are based on AASHTO LRFD Bridge Design Specifications as modified by applicable requirements contained in PennDOT Design Manual Part 4.
3. Contech Engineered Solutions LLC takes full responsibility for engineering theory, calculation correctness, and ensuring that all design assumptions are validated in the contract document either by needed details or construction specifications.
4. Footing reactions depend on the actual cover height and shall be calculated in accordance with Section 12.9 of the AASHTO LRFD Bridge Design Specifications and/or PennDOT Design Manual Part 4.
5. Standard design is for square end structures. Culvert ends requiring bevels or skews may require additional features to be incorporated into the shop drawings by the manufacturer.
6. Secure District Bridge and Geotechnical (Soils) Engineer's approval before incorporating aluminum structural plate box culverts into any project.
7. Contractor is to verify that all information shown on the drawings has been thoroughly checked.

B. MATERIALS

1. Materials shall conform to the following standards:

Bolts, Nuts	ASTM A307 or A449
Hot Dip Galvanized Coatings (Steel Hardware)	ASTM A153
Anchor Bolts	ASTM A307
Anchor Bolts Nuts	ASTM A563
Aluminum Sheet	ASTM B209
Aluminum Structural Plate (ALSP)	ASTM B746, AASHTO M219
ALBC Box Culvert (Geometry, Rib Stiffeners)	ASTM B864
ALBC Box Culvert Geometric Limits	AASHTO LRFD BDS 12.9.4.1-1
Concrete (f'c ≥ 4000 psi)	PENNDOT Publication 408, Section 704
Reinforcing Steel (Grade 60)	ASTM A615

2. Structural backfill shall conform to the requirements of Standard Drawings RC-12M and RC-30M and Publication 408.
3. Provide materials and workmanship in accordance with PENNDOT Publication 408, and supplements thereof, and/or special provisions as indicated or specified herein (Section 603 of Publication 408 applies to metal plate culverts).
4. Manufactured in accordance with the approved Quality Assurance Plan.
5. Certify in accordance with Publication 408, Section 106.03(b)3.

C. DESIGN

1. Designed per AASHTO LRFD and PennDOT DM4.
2. Secure District Bridge and Geotechnical (Soils) Engineer's approval before incorporating aluminum structural plate box culverts into any project.
3. Provide at no expense to the Department four sets of 22"x34" assembly drawings that identify placement of the individual plates, rib schedule, bolting locations, bolt lengths for the varied connections, and any related appurtenances.
4. Rib and plate combinations for the various shell configurations not shown in the cover height tables require computational support consistent with the development of said table, signed and sealed by a professional engineer licensed in the State of Pennsylvania.
5. As applicable, provide a suitable footing design for the application, complete with engineering calculations signed and sealed by a professional engineer licensed in the State of Pennsylvania. The design shall incorporate soil bearings capacities assigned by the District, noted on contract documents, or otherwise determined by investigation.
6. Place footings below scour and frost depths. Use PennDOT criteria in determining scour depth. Place bottom of footing at a minimum depth equal to the prevailing frost depth or scour depth but not less than three feet below ground elevation unless constructed on rock foundation or otherwise indicated. If non-yielding material is found above the scour depth, the height of non-yielding material shall govern.
7. Concrete cutoff walls or scour curtains shall extend to a minimum depth of 3'-6" below all inlets and outlets and footings placed over erodible deposits in accordance with Standard Drawing BD-631M. Concrete cutoff walls are required when using the full invert option.
8. Assembly drawings and footing design shall be incorporated into the construction plans that meet PennDOT drawing requirements. The first sheet of the drawings shall be signed and sealed by a professional engineer licensed in the State of Pennsylvania with the accompanying statement above the seal: "I certify that all design assumptions have been validated either through construction details, notes on the drawings, or through contract plans and provisions."
9. The following order of precedence governs any real or apparent conflict between design parameters, stresses or specifications:
   a. Design requirements listed in "Special drawings and special design requirements" of the special provisions
   b. Pennsylvania Department of Transportation Design Manual Part 4 (current)
   c. Pennsylvania Department of Transportation Standard Drawings
   d. AASHTO LRFD Bridge Design Specifications (current with PennDOT)

   The Chief Bridge Engineer shall arbitrate in the event a clear order of precedence cannot be established or a difference in interpretation of the design cannot be resolved.
10. Do not change the bottom of the footing elevation unless appropriately authorized by the District Bridge Engineer/District Geotechnical (Soils) Engineer.
11. The type and extent of end treatment on the box culvert should be chosen and designed so as to prevent the loss of backfill due to high flow conditions.
12. Headwall construction shall be vertical orientation only. Any design, other than vertical orientation, must be reviewed by the manufacturer and/or design engineer.

D. STRUCTURE ASSEMBLY

1. The box culvert shall be assembled in accordance with the shop drawings provided by the manufacturer and per the manufacturer's recommendations.
2. Plate laps must be properly mated in a tangent fashion using proper alignment techniques and adequate bolt torque to seat the corrugation. The recommended installation bolt torque for aluminum box culverts is 90-115 ft-lbs for invert plates and 100-135 ft-lbs for all other components.

E. CONSTRUCTION

1. The work consists of furnishing, erecting and backfilling an aluminum structural plate box culvert on concrete footings, or a corrugated invert plate. The work includes excavation of on-site soils, proper trench construction, and structure placement to the lines, grades and locations shown on approved project drawings.
2. The box culvert shall be installed in accordance with the plans and specifications, the manufacturer's recommendations and Section 26 of the AASHTO LRFD Bridge Construction Specifications. The contractor shall take special note that aluminum structural plate box culverts are flexible by nature and therefore derive structural stability from the strength and relative stiffness of the surrounding backfill material. It is the resulting soil-culvert interaction system that defines the ability of the flexible box culvert to withstand the defined service loads.
3. Structural backfill shall conform to the requirements of Standard Drawings RC-12M and RC-30M and Publication 408. Backfill must be placed symmetrically of each side of the structure in 6 to 8-in lifts. Each lift shall be compacted to a minimum of 90% modified density per AASHTO T180.
4. If less than 3-ft of space is available on either side of box culvert, concrete grout or a flowable fill may be required to ensure compaction against undisturbed soil.
5. Minimum cover may need to be increased for construction vehicle loads larger than a Caterpillar D4 bulldozer, but shall not exceed the maximum allowable cover for the box culvert design.
6. When using a full invert, the foundation shall have a minimum of 4,000 psf bearing capacity and include 6-in stable, well-graded granular bedding (lower bearing capacities can be accommodated through special design or the use of concrete footings).

10 / 18 / 2019

PennDOT Drawing Number: 2013-224 PE

The design and information shown on this drawing is provided as a service to the project owner, engineer and contractor by Contech Engineered Solutions LLC ("Contech"). Neither this drawing, nor any part thereof, may be used, reproduced or modified in any manner without the prior written consent of Contech. Failure to comply is done at the user's own risk and Contech expressly disclaims any liability or responsibility for such use.

If discrepancies between the supplied information upon which the drawing is based and actual field conditions are encountered as site work progresses, these discrepancies must be reported to Contech immediately for re-evaluation of the design. Contech accepts no liability for designs based on missing, incomplete or inaccurate information supplied by others.

MARK	DATE	REVISION DESCRIPTION	BY
4	8/12/2019	REVISIONS PER 8-2-19 COMMENTS	SCC
3	5/30/2019	REVISED PER PENNDOT COMMENTS	SCC
2	1/16/2015	REVISED PER PENNDOT COMMENTS	SCC
1	10/15/2014	REVISED PER PENNDOT COMMENTS	SCC

CONTECH ENGINEERED SOLUTIONS LLC
www.ContechES.com
9025 Centre Pointe Dr., Suite 400, West Chester, OH 45069
800-338-1122 513-645-7000 513-645-7993 FAX

CONTECH STRUCTURAL PLATE

ALUMINUM STRUCTURAL PLATE BOX CULVERTS

PROJECT No.:	SEQ. No.: 001	DATE: 9/12/2013
DESIGNED:	DRAWN: SCC	
CHECKED: BDH/MJO	APPROVED:	
SHEET NO.: 10 OF 10		

H:\DRAINAGE PLATE AND SPECIALTY ENGINEERING\SPECIFICATIONS,REGULATORY,REFERENCES & RESOURCES\STATE & FEDERAL SPECS\PENNDOT\PENNDOT ALBC\MAY 2019\PENNDOT ALBC DRAWING SUBMITTAL-2.DWG 8/12/2019 12:11 PM

Product:

Item 8622-xxxx Gravix Retaining Wall System
Earth Wall Products, LLC
PennDOT Drawing # 2016-296

Approval Date:
December 13, 2019

Initiated By SOL:
483-19-07

Application/Use:

Gravix Retaining Wall System developed by Earth Wall Products, LLC, Georgia has been approved for use as an "As-designed" or "Alternate" retaining wall. The use as an "As-designed" or "Alternate" retaining wall is at the discretion of the District Executive.

Gravix Retaining Wall System usage has the following restrictions:

- Maximum Height is 36 ft for 2H:1V sloping backfill.
- Maximum Height is 40 ft for level backfill with traffic.

This wall system meets both AASHTO and Design Manual, Part 4 design criteria.

Specifications:

Design/Material/Construction Specifications for this culvert system are specified on PennDOT Drawing #2016-296 dated 12/13/2019 of Gravix Retaining Wall System details for your use.

Comments:

On those projects permitting the use of this system as an alternate, a special provision should be included in the proposal to indicate that the "Gravix Retaining Wall System" as an alternate is allowed.

The contractor will be required to revise the pertinent contract drawings as in accordance with DM-4, PP 1.10 to show the usage of "Gravix Retaining Wall System" and will also be required to reimburse the Department a fee per design for the review and approval of the revision. The fee shall be as specified in the contract's Special Provisions.

GRAVITY RETAINING WALL SYSTEM

GRAVIX

PennDOT Precast Wall System

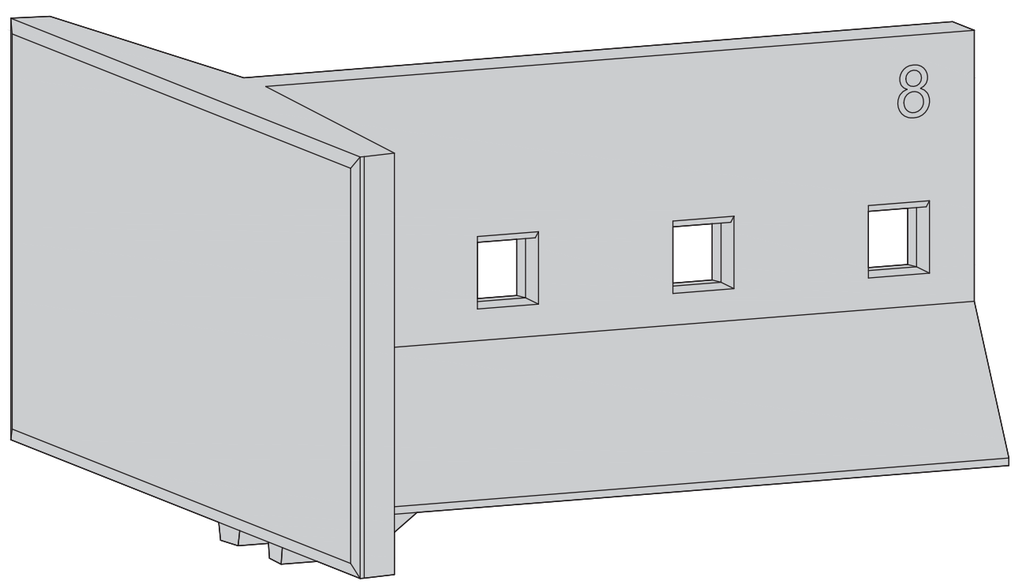

12/13/2019

PENNSYLVANIA
DEPARTMENT OF TRANSPORTATION
RECOMMENDED

Thomas P Macioce

CHIEF BRIDGE ENGINEER

© Copyright 2018 by Earth Wall Products, LLC. All rights reserved. This document is the property of Earth Wall Products, LLC. It is to be used only for the specific project referred to or identified herein and is not to be used on other projects, in whole or in part, except by the express written agreement of Earth Wall Products, LLC.

THIS SHEET PLOTS ON 22" x 34" ANSI D

GRAVIX Precast Wall System (2019-10-28) REV.dwg
10/28/2019 12:03 PM

REVISIONS

REV.	DESCRIPTION	BY	DATE
2	UPDATED PER REVIEW COMMENTS	TR	08/31/14
3	UPDATED PER REVIEW COMMENTS	TR	12/21/18
4	UPDATED PER REVIEW COMMENTS	TDC	7/9/19
5	UPDATED PER REVIEW COMMENTS	TDC	7/11/19
6	UPDATED PER REVIEW COMMENTS	TDC	9/27/19
7	UPDATED PER REVIEW COMMENTS	TDC	10/28/19

GRAVIX
PennDOT Precast Wall System
GRAVIX IS A LICENSED PRODUCT OF EARTH WALL PRODUCTS, LLC

I CERTIFY THAT ALL ASSUMPTIONS MADE IN DESIGNING THIS WALL HAVE BEEN VALIDATED THROUGH CONSTRUCTION DETAILS, SPECIAL NOTES AND / OR INSTRUCTIONS TO THE FABRICATOR, ERECTOR AND CONTRACTOR. CERTIFIED WITH RESPECT TO BEARING, SLIDING, INTERNAL STABILITY AND OVERTURNING OF THE GRAVIX STRUCTURE ONLY.

COMMONWEALTH OF PENNSYLVANIA
REGISTERED PROFESSIONAL
LANCE G. PARADISE
ENGINEER
PE072410
PENNSYLVANIA
10/21/19

COMMONWEALTH OF PENNSYLVANIA
DEPARTMENT OF TRANSPORTATION

DRAWING NUMBER # 2016-296

COVER SHEET

LINE IS 2 INCHES AT FULL SIZE (IF NOT 2"—SCALE ACCORDINGLY)

DESIGNED TLR
DRAWN TDC
REVIEWED TLR

SHEET NUMBER
1 OF 52

INDEX OF DRAWINGS

1. COVER SHEET
2. DRAWING INDEX
3. PROJECT AND DESIGN SPECIFICATIONS
4. MANUFACTURE SPECIFICATIONS
5. CONSTRUCTION SPECIFICATIONS
6. GRAVIX UNITS
7. TYPICAL CUT AND FILL CROSS SECTIONS
8. TYPICAL BATTERED CUT CROSS SECTION
9. DETAILS CONCRETE DITCH, FENCE AND COPING OPTION
10. CONVENTIONAL PRECAST TRAFFIC BARRIER DETAILS
11. DETAILS VERTICAL AND HORIZONTAL JOINT
12. DETAILS LEVELING PAD
13. ELEVATION VIEW WITH TOP UNIT
14. ELEVATION VIEW WITH TRAFFIC BARRIER
15. GUIDE RAIL ATTACHMENT DETAIL
16. DETAILS RADIUS
17. TRAFFIC BARRIER UNIT IN HORIZONTAL RADIUS DETAIL
18. DETAILS 90 DEGREE CORNER
19. CORNER CONNECTION DETAILS
20. ADDITIONAL DETAILS
21. MISCELLANEOUS OBSTRUCTION DETAILS – 1
22. MISCELLANEOUS OBSTRUCTION DETAILS – 2
23. DETAILS PIPE HEADWALL
24. DETAILS ALIGNMENT SHIMMING
25. CONSTRUCTION LIFTING DEVICE – 1
26. CONSTRUCTION LIFTING DEVICE – 2
27. STANDARD UNIT (6 TO 12 FT STEM UNITS) DIMENSIONS
28. STANDARD UNIT (6 TO 12 FT STEM UNITS) REINFORCEMENT LAYOUT – 1
29. STANDARD UNIT (6 TO 12 FT STEM UNITS) REINFORCEMENT LAYOUT – 2
30. STANDARD UNIT (6 TO 12 FT STEM UNITS) REBAR DETAILS
31. STANDARD UNIT (14 TO 20 FT STEM UNITS) DIMENSIONS
32. STANDARD UNIT (14 TO 20 FT STEM UNITS) REINFORCEMENT LAYOUT – 1
33. STANDARD UNIT (14 TO 20 FT STEM UNITS) REINFORCEMENT LAYOUT – 2
34. STANDARD UNIT (14 TO 20 FT STEM UNITS) REBAR DETAILS
35. LEVELING UNIT DIMENSIONS
36. LEVELING UNIT REINFORCEMENT LAYOUT – 1
37. LEVELING UNIT REINFORCEMENT LAYOUT – 2
38. LEVELING UNIT REBAR DETAILS
39. TOP UNIT DIMENSIONS
40. TOP UNIT REINFORCEMENT LAYOUT – 1
41. TOP UNIT REINFORCEMENT LAYOUT – 2
42. TOP UNIT REBAR DETAILS
43. 42" GRAVIX TRAFFIC BARRIER UNIT DIMENSIONS – 1
44. 42" GRAVIX TRAFFIC BARRIER UNIT DIMENSIONS – 2
45. 42" GRAVIX TRAFFIC BARRIER UNIT DIMENSIONS – 3
46. 42" GRAVIX TRAFFIC BARRIER UNIT REINFORCEMENT LAYOUT
47. 42" GRAVIX TRAFFIC BARRIER UNIT REBAR DETAILS
48. 42" GRAVIX MSE TRAFFIC BARRIER UNIT DIMENSIONS – 1
49. 42" GRAVIX MSE TRAFFIC BARRIER UNIT DIMENSIONS – 2
50. 42" GRAVIX MSE TRAFFIC BARRIER UNIT DIMENSIONS – 3
51. 42" GRAVIX MSE TRAFFIC BARRIER UNIT REINFORCEMENT LAYOUT
52. 42" GRAVIX MSE TRAFFIC BARRIER UNIT REBAR DETAILS

12/13/2019

REVISIONS

REV.	DESCRIPTION	BY	DATE
2	UPDATED PER REVIEW COMMENTS	TR	08/31/14
3	UPDATED PER REVIEW COMMENTS	TR	12/21/18
4	UPDATED PER REVIEW COMMENTS	TDC	7/9/19
5	UPDATED PER REVIEW COMMENTS	TDC	7/11/19
6	UPDATED PER REVIEW COMMENTS	TDC	9/27/19
7	UPDATED PER REVIEW COMMENTS	TDC	10/28/19

GRAVIX
PennDOT Precast Wall System
GRAVIX IS A LICENSED PRODUCT OF EARTH WALL PRODUCTS, LLC

I CERTIFY THAT ALL ASSUMPTIONS MADE IN DESIGNING THIS WALL HAVE BEEN VALIDATED THROUGH CONSTRUCTION DETAILS, SPECIAL NOTES AND / OR INSTRUCTIONS TO THE FABRICATOR, ERECTOR AND CONTRACTOR. CERTIFIED WITH RESPECT TO BEARING, SLIDING, INTERNAL STABILITY AND OVERTURNING OF THE GRAVIX STRUCTURE ONLY.

COMMONWEALTH OF PENNSYLVANIA
REGISTERED PROFESSIONAL
LANCE G. PARASTER
ENGINEER
PE057410
PENNSYLVANIA
10/23/19

COMMONWEALTH OF PENNSYLVANIA
DEPARTMENT OF TRANSPORTATION

DRAWING NUMBER # 2016-296

DRAWING INDEX

LINE IS 2 INCHES AT FULL SIZE (IF NOT 2"–SCALE ACCORDINGLY)

DESIGNED TLR
DRAWN TDC
REVIEWED TLR

SHEET NUMBER
2 OF 52

© Copyright 2018 by Earth Wall Products, LLC. All rights reserved. This document is the property of Earth Wall Products, LLC. It is to be used only for the specific project referred to or identified herein and is not to be used on other projects, in whole or in part, except by the express written agreement of Earth Wall Products, LLC.

THIS SHEET PLOTS ON 22" x 34" ANSI D

GRAVIX Precast Wall System (2019-10-28) REV.dwg
10/28/2019 12:03 PM

PROJECT SPECIFICATIONS

1. FINAL CONSTRUCTION DRAWINGS MUST BE SUBMITTED TO THE ENGINEER, FOR REVIEW AND APPROVAL. DO NOT BEGIN FABRICATION NOR CONSTRUCTION PRIOR TO APPROVAL OF CONSTRUCTION DRAWINGS AND ACCEPTANCE OF THE SHOP DRAWINGS.

2. REPORT DISCREPANCIES BETWEEN CONTRACT INFORMATION AND ACTUAL CONDITIONS AS SITE WORK PROGRESSES TO DESIGN ENGINEER OF RECORD FOR REDESIGN.

3. THE FOLLOWING DESIGN ASSUMPTIONS WERE MADE:
   - FOUNDATION IS ABLE TO SUPPORT BEARING PRESSURE AS NOTED ON ELEVATION VIEW.

4. STRUCTURAL BACKFILL MATERIALS GRADATION AND PROPERTIES:
   GRADATION AS DETERMINED BY AASHTO T–27:
   SIEVE SIZE PERCENT PASSING·
   - 3 INCH 100
   - 3/4 INCH 20–100
   - NO. 40 0–60
   - NO. 200 0–10

   BACKFILL MATERIALS UP TO 25% PASSING THRU NO. 200 SIEVE CAN BE USED IF POSITIVE DRAINAGE BEHIND THE WALL IS PROVIDED. BOTH THE MATERIAL AND THE DRAINAGE MUST BE APPROVED BY PENNDOT ON A PROJECT SPECIFIC BASIS.

   THE MATERIAL SHALL CONTAIN NO MORE THAN 2% DELETERIOUS SHALE, CLAY LUMPS, FRIABLE PARTICLES, COAL AND COKE.

   INTERNAL FRICTION ANGLE: FURNISH MATERIAL EXHIBITING AN ANGLE OF INTERNAL FRICTION CONSISTENT WITH THAT USED IN THE DESIGN BUT NOT LESS THAN 34 DEGREES AS DETERMINED BY AASHTO T–236, ON THE PORTION FINER THAN THE NO. 10 SIEVE WHEN COMPACTED TO 95% OF AASHTO T–99, METHODS C OR D (WITH OVERSIZE CORRECTION AS OUTLINED) AT OPTIMUM MOISTURE CONTENT, EXCEPT FOR COARSE AGGREGATES MEETING THE REQUIREMENTS OF PUBLICATION 408 SECTION 703.2. NO TESTING IS REQUIRED FOR BACKFILLS WHERE 80% OF THE MATERIAL SIZES ARE GREATER THAN 3/4".

   DENSITY: COMPACTED DENSITY = 90 TO 120 PCF OR AS SPECIFIED ON THE CONTRACT PLANS. IF THE COMPACTED DENSITY OF THE LOCALLY AVAILABLE MATERIAL THAT MEETS THE ABOVE GRADATION AND INTERNAL FRICTION ANGLE PROPERTIES, IS DIFFERENT, THE WALL DESIGN MUST BE EVALUATED BASED ON THE ACTUAL PROPERTIES OF THE AVAILABLE BACKFILL MATERIAL.

   THE CONTRACTOR SHALL TEST AND CERTIFY THE UNIT WEIGHT OF THE SELECT FILL. TESTING AND CERTIFICATION OF EMBANKMENT BACKFILL MATERIALS IS REQUIRED IF PARAMETERS USED IN DESIGN DIFFER FROM THE CONTRACT SPECIFIED VALUES.

5. UNIFORM SURCHARGE = 3 FT EQUIVALENT SOIL HEIGHT
   SEISMIC LOADING = SITE SPECIFIC

6. THE GRANULAR MATERIAL FOR THE DRAINAGE BLANKET SHALL MEET THE FOLLOWING REQUIREMENTS:
   - GRADATION LIMITS AS DETERMINED BY PUBLICATION 408, SECTION 703.

SIEVE SIZE	PERCENT PASSING
1–1/2 INCH	100
1 INCH	95–100
1/2 INCH	25–60
NO. 4	0–10
NO. 8	0–5

   THE MATERIAL MAY CONTAIN A MAXIMUM OF 2% DELETERIOUS SHALE AND THE TOTAL OF DELETERIOUS SHALE–LIKE CLAY LUMPS, FRIABLE PARTICLES, COAL AND COKE WILL BE 2% MAXIMUM.

7. GRAVIX FACE FORM FINISH:
   - MULTIPLE FINISH PATTERNS TO MEET PROJECT AESTHETIC REQUIREMENTS
   - CONTRACTOR TO COORDINATE APPROVAL OF A TYPICAL MOCK–UP SAMPLE OF THE GRAVIX UNIT TO VERIFY COLOR, TEXTURE AND FINISH.
   - ALL 3 OF THE FOLLOWING APPROVALS ARE REQUIRED:
     – PENNDOT DISTRICT
     – PROJECT REPRESENTATIVE
     – STRUCTURES MATERIAL SECTION

9. SCOUR PROTECTION NOTE:
   - DESIGN ENGINEER MUST DESIGN WALL TO BE AT LEAST 2 FEET BELOW CALCULATED SCOUR DEPTH.

10. REAR FORM BOARD OF LEVELING PAD SHALL BE SURVEY CONTROLLED.

11. THE DESIGN ENGINEER MUST EVALUATE SETTLEMENT.
12. ALL CAST IN PLACE DETAILS MUST CONFORM TO THE FOLLOWINGS SPECIFICATIONS:
    CONCRETE: CLASS AA, f'c = 3,500 PSI
    STEEL: EPOXY COATED ASTM A–615 GRADE 60, fy = 60 KSI

DESIGN SPECIFICATIONS

1. THE FIRST SHEET OF CONSTRUCTION DRAWINGS AND DESIGN CALCULATIONS SHALL BE SIGNED AND SEALED BY A PROFESSIONAL ENGINEER LICENSED IN PENNSYLVANIA. DESIGN ENGINEER CERTIFIES THE DESIGN AND CONSTRUCTION SPECIFICATIONS OUTLINED HEREIN FOLLOWS ACCEPTABLE ENGINEERING THEORY AND MEETS CURRENT INDUSTRY STANDARDS. THE DESIGN ENGINEER FURTHER CERTIFIES THAT ALL ASSUMPTIONS MADE IN DESIGNING THE WALL HAVE BEEN VALIDATED THROUGH CONSTRUCTION DETAILS, SPECIAL PROVISIONS, INSTRUCTIONS TO THE FABRICATOR, AND CERTIFICATION BY THE ERECTOR.

2. THE GRAVIX RETAINING WALL IS A GRAVITY SYSTEM WHICH DEPENDS ON THE BACKFILL AND PRECAST UNIT WEIGHT TO CREATE A STABLE GRAVITY MASS. THE GRAVITY MASS IS DESIGNED TO RESIST THE DRIVING FORCES OF THE RETAINED SOIL AND ANTICIPATED SURCHARGE PRESSURE.

3. THE DESIGN AS SHOWN ON THESE DRAWINGS IS BASED UPON INFORMATION PROVIDED BY THE OWNER AS OUTLINED IN THE PROJECT SPECIFICATIONS SECTION. DESIGN ENGINEER HAS DESIGNED AND IS RESPONSIBLE FOR INTERNAL STABILITY, SLIDING, BEARING AND OVERTURNING OF THE EARTH STRUCTURE. EXTERNAL STABILITY INCLUDING FOUNDATION (BEARING CAPACITY AND SETTLEMENT) AND SLOPE STABILITY (SLIDING AND OVERTURNING) IS THE RESPONSIBILITY OF THE OWNER.

4. THE GRAVIX DESIGN MUST MEET AASHTO LRFD BRIDGE DESIGN SPECIFICATIONS, AS MODIFIED BY PENNDOT'S DM–4 (PUB #15M).

5. THE FOLLOWING MINIMUM EMBEDMENT IS PROVIDED AT THE FACE OF THE WALL. THE MINIMUM EMBEDMENT IS DETERMINED AS A FUNCTION OF THE HEIGHT OF THE STRUCTURE (H) ABOVE THE TOP OF THE LEVELING PAD.

CONDITIONS AT TOE OF WALL	MINIMUM EMBEDMENT
HORIZONTAL GRADE	H/20
3(H):1(V) SLOPE	H/10
2(H):1(V) SLOPE	H/7

   THE MINIMUM EMBEDMENT DEPTH FROM THE ADJACENT FINISHED GROUND TO THE TOP OF THE LEVELING PAD SHALL BE 36" OR GREATER BASED ON THE PREVAILING DEPTH OF FROST PENETRATION AND EXTERNAL STABILITY REQUIREMENTS.

6. FOR WALLS CONSTRUCTED ON SLOPES, A MINIMUM HORIZONTAL BENCH 4' WIDE SHALL BE PROVIDED.

7. FOR CONSTRUCTION ALONG RIVERS AND STREAMS, THE ELEVATION AT THE TOP OF LEVELING PAD SHALL BE THE LOWER OF 6' BELOW STREAMBED OR 2' BELOW POTENTIAL SCOUR DEPTH. IN ADDITION, SATURATED SOIL CONDITION MUST BE CONSIDERED IN DETERMINING THE INTERNAL AND EXTERNAL STABILITY OF THE WALLS.

8. DRAINAGE REQUIREMENTS – ALL GRAVIX RETAINING WALLS SHALL BE DESIGNED AT A MINIMUM WITH A CONTINUOUS SUBSURFACE DRAIN PLACED BEHIND THE LEVELING PAD EXTENDING TO THE BACK OF THE LOWEST GRAVIX UNIT AND OUTLETTED AS REQUIRED. IN CUT AND HILL–SIDE FILL AREAS WITH ESTABLISHED OR POTENTIAL GROUNDWATER LEVELS ABOVE THE LEVELING PAD GRADE, A CHIMNEY DRAIN SHALL BE PROVIDED AND CONNECTED TO THE HORIZONTAL BLANKET DRAIN SYSTEM.

9. LIVE LOADS SHALL BE CONSIDERED IN ACCORDANCE WITH DM–4 CRITERIA.

10. SEISMIC FORCES SHALL BE CONSIDERED FOR DESIGN AS REQUIRED BY DM–4 AND CONTRACT DOCUMENTS.

11. TRAFFIC BARRIER IMPACT LOAD TL–4.
    - CRASH TEST CRITERIA: MASH 2016
    - PERMANENT DEFLECTION FROM THE CRASH TEST: 0.25 INCHES

12. GRAVIX HEIGHT LIMITATIONS:
    - LEVEL BACKFILL WITH TRAFFIC SURCHARGE: 40 FEET
    - 2 TO 1 INFINITE SLOPING BACKFILL: 36 FEET

13. PROVIDE CRASH WALLS IN FRONT OF PREFABRICATED WALLS WHEN WALL IS WITHIN 50'–0" OF RAILROAD TRACK. TOP OF CRASHWALL SHALL BE 6'–0" ABOVE THE TOP OF THE RAILROAD TRACK.

14. UNITS WITH STEM LENGTHS LESS THAN 6' MAY ONLY BE USED WHERE A LONGER STEM WOULD CONFLICT WITH THE STEM OF AN OTHER UNIT PLACED TRANSVERSELY IN THE SAME PLANE. IN ALL SUCH CASES, THE SHORT STEMMED UNITS MUST BE RIGIDLY CONNECTED TO THE INTERSECTING LONG STEMMED UNIT AND THE WALLS MUST BE DESIGNED USING AT–REST LATERAL EARTH PRESSURES

12/13/2019

REVISIONS

REV.	DESCRIPTION	BY	DATE
2	UPDATED PER REVIEW COMMENTS	TR	08/31/14
3	UPDATED PER REVIEW COMMENTS	TR	12/21/18
4	UPDATED PER REVIEW COMMENTS	TDC	7/9/19
5	UPDATED PER REVIEW COMMENTS	TDC	7/11/19
6	UPDATED PER REVIEW COMMENTS	TDC	9/27/19
7	UPDATED PER REVIEW COMMENTS	TDC	10/28/19

GRAVIX
PennDOT Precast Wall System
GRAVIX IS A LICENSED PRODUCT OF EARTH WALL PRODUCTS, LLC

I CERTIFY THAT ALL ASSUMPTIONS MADE IN DESIGNING THIS WALL HAVE BEEN VALIDATED THROUGH CONSTRUCTION DETAILS, SPECIAL NOTES AND / OR INSTRUCTIONS TO THE FABRICATOR, ERECTOR AND CONTRACTOR. CERTIFIED WITH RESPECT TO BEARING, SLIDING, INTERNAL STABILITY AND OVERTURNING OF THE GRAVIX STRUCTURE ONLY.

COMMONWEALTH OF PENNSYLVANIA REGISTERED PROFESSIONAL LANCE G. LAMANNA ENGINEER 052419 PENNSYLVANIA

COMMONWEALTH OF PENNSYLVANIA
DEPARTMENT OF TRANSPORTATION

DRAWING NUMBER # 2016-296

PROJECT AND DESIGN SPECIFICATIONS

LINE IS 2 INCHES AT FULL SIZE (IF NOT 2"–SCALE ACCORDINGLY)

DESIGNED TLR
DRAWN TDC
REVIEWED TLR

SHEET NUMBER
3 OF 52

THIS SHEET PLOTS ON 22" x 34" ANSI D

© Copyright 2018 by Earth Wall Products, LLC. All rights reserved. This document is the property of Earth Wall Products, LLC. It is to be used only for the specific project referred to or identified herein and is not to be used on other projects, in whole or in part, except by the express written agreement of Earth Wall Products, LLC.

GRAVIX Precast Wall System (2019–10–28) REV.dwg
10/28/2019 12:03 PM

MANUFACTURE SPECIFICATIONS

1. FABRICATION OF GRAVIX UNITS CANNOT BEGIN UNTIL CONSTRUCTION DRAWINGS ARE APPROVED AND SHOP DRAWINGS ARE ACCEPTED.

2. GRAVIX PRECAST UNITS SHALL BE FABRICATED AT BULLETIN 15 LISTED FABRICATOR. PROVIDE CONCRETE FOR CASTING THE UNITS WITH A 28–DAY MINIMUM COMPRESSIVE STRENGTH OF 4000 PSI. AIR CONTENT TO BE BETWEEN 6%±1.5%.

3. SET THE REINFORCING STEEL IN PLACE TO THE DIMENSIONS AND TOLERANCES INDICATED IN NOTES OR AS ACCEPTED BY THE ENGINEER PRIOR TO CASTING TOLERANCES TO BE SHOWN ON THE ACCEPTED SHOP DRAWINGS.

4. ACCEPTANCE OF THE PRECAST GRAVIX UNITS WILL BE DETERMINED IN ADDITION TO VISUAL INSPECTION ON THE BASIS OF TESTING FOR COMPRESSIVE STRENGTH, SLUMP AND ENTRAINED AIR IN THE CONCRETE MIXTURE. THE PLANT MUST PROVIDE FACILITIES FOR THE DEPARTMENT TO PERFORM ALL NECESSARY SAMPLING AND TESTING IN AN EXPEDITIOUS AND SATISFACTORY MANNER.

5. THE ACCEPTANCE OF THE GRAVIX UNITS IS DETERMINED IN PART BY THE COMPRESSION STRENGTH TESTING OF EACH LOT. A LOT IS DEFINED AS ONE SHIFT'S PRODUCTION WHERE 4 CYLINDERS ARE TAKEN EACH DAY. THE CYLINDERS PER LOT ARE TESTED IN ACCORDANCE WITH PUBLICATION 408 SECTION 714.7 & PUBLICATION 145.

6. GRAVIX MOLDS SHALL BE CONSTRUCTED IN A MANNER THAT WILL ASSURE THE PRODUCTION OF UNIFORM UNITS WITHIN SPECIFIED MANUFACTURING TOLERANCES.

7. PREPARE AND MIX CONCRETE THEN PLACE USING METHODS THAT WILL PREVENT SEGREGATION OF THE CONCRETE MATERIALS AND THE DISPLACEMENT OF THE STEEL REINFORCEMENT FROM ITS PROPER POSITION IN THE MOLD DURING PLACING AND CONSOLIDATING CONCRETE. CAREFULLY PLACE AND VIBRATE THE CONCRETE IN THE MOLD TO PRODUCE A SURFACE FREE FROM IMPERFECTIONS SUCH AS HONEYCOMB, SEGREGATION, OR CRACKING. USE CLEAR FORM OIL FROM THE SAME MANUFACTURER THROUGHOUT THE CASTING OPERATION FORM OIL SHALL BE COMPATIBLE WITH CONCRETE MIX DESIGN.

8. DO NOT PLACE CONCRETE WHEN AMBIENT TEMPERATURES ARE BELOW 40F OR ABOVE 100F. ADMIXTURES CONTAINING CALCIUM CHLORIDE OR ADMIXTURES THAT CONTAIN CALCIUM ARE NOT PERMITTED.

9. ACCEPTABLE TOLERANCE FOR FINAL GRAVIX UNITS ARE AS FOLLOWS:
   - FACE OF GRAVIX UNIT
     - a. LENGTH AND HEIGHT 3/16" +/–
     - b. DEVIATION FROM SQUARE MEASURED DIAGONALLY 1/2"
     - c. THICKNESS 1/4" +/–
     - d. FLATNESS FOR SMOOTH FINISH 1/4" AND FOR TEXTURED FINISH 3/8" DEVIATION OVER 4' STRAIGHT EDGE
   - STEM OF GRAVIX UNIT
     - a. LENGTH AND HEIGHT 3/16" +/–
     - b. DEVIATION FROM SQUARE MEASURED DIAGONALLY 1/2"
     - c. THICKNESS 1/4" +/–
     - d. OVERALL LENGTH FROM FACE TO END OF STEM 1" +/–
   - STEM HAUNCH OF GRAVIX UNIT
     - a. LENGTH AND HEIGHT 3/16" +/–
     - b. DEVIATION FROM SQUARE MEASURED DIAGONALLY 1/2"
     - c. WIDTH 1/4" +/–
   - REAR FACE OF GRAVIX UNIT
     - a. LENGTH AND HEIGHT 3/16" +/–
     - b. DEVIATION FROM SQUARE MEASURED DIAGONALLY 1/2"
     - c. THICKNESS 1/4" +/–
     - d. FLATNESS 1/4" DEVIATION OVER 4' STRAIGHT EDGE
   - LIFTING BLOCKOUTS CENTER TO CENTER 1" +/–
   - TOP SURFACE SHALL BE FLOAT FINISHED SUFFICIENTLY TO ELIMINATE OPEN AGGREGATE POCKETS AND DISTORTIONS IN EXCESS OF 1/4"
   - REINFORCING STEEL COVER 1/4" MINUS TO PLUS 1/2"
   - REINFORCING STEEL DIMENSIONS 1/2" +/–
   - REINFORCING STEEL TOLERANCE SHALL MEET ACI 117

10. MARK WITH WATERPROOF PAINT ON THE REAR FACE SURFACE OF EACH UNIT AN IDENTIFICATION CODE. RECORDS MUST BE KEPT OF ALL UNITS MANUFACTURER, DATE OF CASTING AND LOT NUMBER. THE STEEL FORMS SHOULD HAVE A PERMANENT IDENTIFYING MARK.

11. HANDLE, STORE AND SHIP ALL UNITS IN SUCH A MANNER AS TO PREVENT CHIPPING, CRACKS AND FRACTURES. UNITS MAY BE STORED IN STACKS UP TO 3 UNITS HIGH WITH PROPER DUNNAGE UNDER UNITS.

12. BEFORE SHIPMENT, EXAMINE ALL SURFACES OF PRECAST GRAVIX UNITS; PATCH ALL SURFACE VOIDS AND OTHER DEFECTS ON SURFACES IN ACCORDANCE WITH PUBLICATION 145 GUIDELINES.

13. GRAVIX UNITS MAY BE REJECTED IN ACCORDANCE WITH PUBLICATION 145 AND FOR THE FOLLOWING:
    1. FRACTURES OR CRACKS PASSING THROUGH THE STEM OR FRONT FACE.
    2. 28–DAY CYLINDER COMPRESSION STRENGTH IS LESS THAN DESIGN CONCRETE STRENGTH REQUIREMENTS.
    3. DIMENSIONS NOT CONFORMING TO THE ALLOWABLE TOLERANCES AS SPECIFIED.
    4. DEFECTS THAT INDICATE PROPORTIONING, MIXING, AND MOLDING NOT IN COMPLIANCE WITH THIS SPECIFICATION.
    5. DAMAGED EDGES WHICH WOULD PREVENT MAKING JOINT WITHIN TOLERANCE.
    6. COLOR VARIATION ON THE FRONT FACE OF THE UNIT.

14. PERMANENTLY IDENTIFY REJECTED UNITS WITH WATERPROOF PAINT.

15. REINFORCING STEEL SHALL BE ASTM – A 615 GRADE 60 WHERE SPECIFIED FOR THE REINFORCING STEEL OF THE UNITS. THE MINIMUM CONCRETE COVER SHALL BE 2" WITH BLACK STEEL REBAR WITH UNIT DIMENSIONS AS SHOWN ON SHEETS 27 THROUGH 52 AND 1.5" WITH EPOXY COATED REBAR WITH UNIT DIMENSIONS DECREASED ACCORDINGLY (STEM 5" WIDE, FACE 4" ON EDGES TO 8" AT CENTER), UNLESS NOTED IN THE DESIGN LAYOUT. PROVIDE EPOXY COATED REINFORCING STEEL FOR BARRIERS, COPING, UNITS EXPOSED TO SALT SPRAY, WHERE INDICATED, AND PER CONTRACT REQUIREMENTS.

16. PROVIDE CERTIFICATION AND FURNISH A COPY OF ALL TEST RESULTS PERFORMED WHICH ARE NECESSARY TO ASSURE COMPLIANCE WITH THE SPECIFICATIONS.

17. POLYVINYL CHLORIDE (PVC) PIPE: 4" DIA. SCHEDULE 40 PVC PIPE FOR WEEPHOLES.

18. A RECORD OF ALL REINFORCING STEEL MILL TEST CERTIFICATES MUST BE KEPT ON FILE FOR A MINIMUM OF 3 YEARS BEYOND THE DATE OF THE LAST SHIPMENT TO THE PROJECT AND SHOULD BE COLLECTED UPON EVERY LOAD DELIVERED.

19. REINFORCING STEEL CAGE ASSEMBLY INSPECTION REPORTS, PRE–POUR INSPECTION REPORTS, AND POST–POUR INSPECTION REPORTS MUST BE KEPT ON FILE FOR A MINIMUM OF 3 YEARS BEYOND THE DATE OF THE LAST SHIPMENT TO THE PROJECT. INSPECT ALL UNITS.

20. CEMENT MILL TEST CERTIFICATES MUST BE KEPT ON FILE FOR A MINIMUM OF 3 YEARS BEYOND THE DATE OF THE LAST SHIPMENT TO THE PROJECT, AND SHOULD BE COLLECTED UPON EVERY LOAD DELIVERED.

21. ADMIXTURE DOSING EQUIPMENT AND WEIGHT BATCH SCALES FOR ALL CEMENTITIOUS AND AGGREGATE RAW MATERIALS MUST BE CALIBRATED ANNUALLY BY AN OUTSIDE AGENCY AND MONTHLY SCALE CHECKS MUST BE PERFORMED IN ACCORDANCE WITH PUBLICATION 145 GUIDELINES. RECORDS OF THIS MUST BE KEPT ON FILE FOR A MINIMUM OF 3 YEARS BEYOND THE DATE OF THE LAST SHIPMENT TO THE PROJECT.

23. FINE AND COURSE AGGREGATE GRADATIONS, SLUMP, TEMPERATURE, DENSITY, PLASTIC AIR CONTENT, AND COMPRESSION STRENGTH TESTS SHALL BE IN ACCORDANCE TO PENNDOT'S PUB 145 GUIDELINES AND PUB 408 SECTION 704 AND 714.

    – ALL OF THESE TEST REPORTS MUST BE KEPT ON FILE FOR A MINIMUM OF THREE YEARS.

24. THE TEMPERATURE OF FRESH MIXED CONCRETE SHOULD NOT BE LESS THAN 50 DEGREES FERINHEIGHT AND SHOULD NOT BE GREATER THEN 90 DEGREES FERINHEIGHT DURING THE BATCHING AND PLACING PROCESS.

25. THE MIX DESIGN WATER/CEMENT RATIO SHALL BE IN ACCORDANCE WITH PUBLICATION 408, SECTION 704, TABLE A.

26. CONCRETE SHALL BE PLACED IN A MANNER THAT PREVENTS LOSS OF MOISTURE AND MINIMIZES WIND AND SUN EXPOSURE, EXTRA MEASURES MAY NEED TO BE TAKEN TO COVER THE FORMS AFTER PLACEMENT AND CONSOLIDATION IF SUCH ELEMENT EXPOSURES ARE PRESENT.

27. MINIMUM HOOK DIAMETER FOR REBAR ARE AS FOLLOWS:
    #4 ≥ 3"
    #5 ≥ 3.75"
    #6 ≥ 4.5"

28. THE MINIMUM UNIT WEIGHT OF CONCRETE IN THE PLASTIC STATE SHALL BE 140 PCF PER ASTM C138

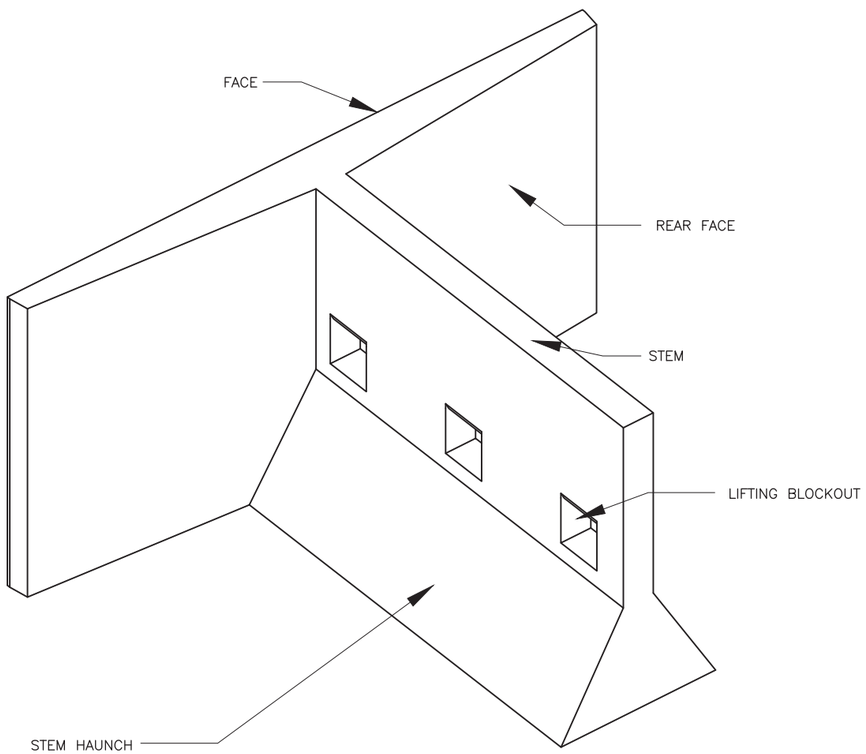

GRAVIX UNIT TOLERANCE REFERENCE

SCALE: NOT TO SCALE

12/13/2019

THIS SHEET PLOTS ON 22" x 34" ANSI D

© Copyright 2018 by Earth Wall Products, LLC. All rights reserved. This document is the property of Earth Wall Products, LLC. It is to be used only for the specific project referred to or identified herein and is not to be used on other projects, in whole or in part, except by the express written agreement of Earth Wall Products, LLC.

GRAVIX Precast Wall System (2019–10–28) REV.dwg
10/28/2019 12:03 PM

REVISIONS

REV.	DESCRIPTION	BY	DATE
2	UPDATED PER REVIEW COMMENTS	TR	08/31/14
3	UPDATED PER REVIEW COMMENTS	TR	12/21/18
4	UPDATED PER REVIEW COMMENTS	TDC	7/9/19
5	UPDATED PER REVIEW COMMENTS	TDC	7/11/19
6	UPDATED PER REVIEW COMMENTS	TDC	9/27/19
7	UPDATED PER REVIEW COMMENTS	TDC	10/28/19

GRAVIX
PennDOT Precast Wall System
GRAVIX IS A LICENSED PRODUCT OF EARTH WALL PRODUCTS, LLC

I CERTIFY THAT ALL ASSUMPTIONS MADE IN DESIGNING THIS WALL HAVE BEEN VALIDATED THROUGH CONSTRUCTION DETAILS, SPECIAL NOTES AND / OR INSTRUCTIONS TO THE FABRICATOR, ERECTOR AND CONTRACTOR. CERTIFIED WITH RESPECT TO BEARING, SLIDING, INTERNAL STABILITY AND OVERTURNING OF THE GRAVIX STRUCTURE ONLY.

COMMONWEALTH OF PENNSYLVANIA
REGISTERED PROFESSIONAL
LANCE G. PARADISO
ENGINEER
PE052416
10/28/19

COMMONWEALTH OF PENNSYLVANIA
DEPARTMENT OF TRANSPORTATION

DRAWING NUMBER # 2016-296

MANUFACTURE SPECIFICATIONS

LINE IS 2 INCHES AT FULL SIZE (IF NOT 2"–SCALE ACCORDINGLY)

DESIGNED TLR
DRAWN TDC
REVIEWED TLR

SHEET NUMBER
4 OF 52

CONSTRUCTION SPECIFICATIONS

1. CONSTRUCTION AND INSTALLATION OF THE GRAVIX RETAINING WALL CANNOT BEGIN UNTIL CONSTRUCTION DRAWINGS ARE APPROVED.

2. IDENTIFICATION OF ALL UTILITIES SHALL BE THE RESPONSIBILITY OF THE CONTRACTOR PRIOR TO CONSTRUCTION. ANY CONFLICTS SHALL BE REPORTED TO THE ENGINEER OF RECORD PRIOR TO CONSTRUCTION.

3. LEVELING PAD SHALL BE CONSTRUCTED WITH CLASS A CONCRETE. REPAIR OR REPLACE LEVELING PADS WHICH DO NOT MEET THIS REQUIREMENT AS DIRECTED BY THE ENGINEER.

4. DRAINAGE BLANKET FOUNDATION SHALL BE EXCAVATED AND GRADED TO THE LINES AND GRADES AS DETAILED IN THE CONTRACT DRAWINGS. THE TOP OF THE LEVELING PAD AT THE CENTER OF THE UNIT FACE IS CONSIDERED THE ELEVATION OF THE BOTTOM OF WALL FOR EACH COLUMN OF UNITS.

5. OVER–EXCAVATION MUST BE BACKFILLED AS DIRECTED BY THE ENGINEER USING APPROVED COMPACTED STRUCTURAL FILL. FOUNDATION MATERIAL FOUND TO BE UNSUITABLE SHALL BE REMOVED AND REPLACED WITH COMPACTED STRUCTURAL FILL AS DIRECTED BY THE ENGINEER. LEVELING PAD SHALL STAY WITHIN 1/4" OVER 10'. PRIOR TO WALL CONSTRUCTION, PROOF ROLL THE ENTIRE WALL FOUNDATION SUBGRADE. ANY SOFT OR UNSUITABLE MATERIALS SHALL BE REMOVED AND REPLACED WITH COMPACTED STRUCTURAL FILL PER ENGINEER'S DIRECTIONS. WALL FOUNDATION EXCAVATION SHALL BE INSPECTED BY A QUALIFIED GEOTECHNICAL ENGINEER TO VERIFY THAT THE BEARING SOILS ARE AS SPECIFIED ON THE ELEVATION VIEW FOR EACH RESPECTIVE WALL SECTION.

6. SHIMS MAY BE USED AS NECESSARY TO LEVEL THE GRAVIX UNITS TO THE DESIGN GRADE AND HORIZONTAL LOCATION. USE NO MORE THAN 3/8" COMBINED THICKNESS OF SHIMS AT ANY ONE LOCATION. SHIMS SHALL BE LISTED IN BULLETIN 15 AND MADE OF HDPE, LDPE, NYLON OR NON–BIODEGRADABLE MATERIAL APPROVED BY ENGINEER WITH A MINIMUM BEARING SURFACE AREA OF 4"X4".

7. LEVELING PADS SHALL BE PLACED TO THE LINES AND GRADES SHOWN ON THE PLANS OR AS DIRECTED BY THE ENGINEER. CONCRETE FINISH SHALL BE WOOD FLOAT. THE REAR FORM BOARD OF THE LEVELING PAD SHALL BE SURVEY CONTROLLED. GRAVIX UNIT BOTTOM NODES WILL SET AGAINST REAR OF LEVELING PAD AND ESTABLISH FINAL WALL FACE LOCATION.

8. PLACE TOP OF LEVELING PAD AT A MINIMUM DEPTH EQUAL TO PREVAILING FROST DEPTH BUT NOT LESS THAN 3'–0" BELOW FINISHED GROUND ELEVATION, UNLESS OTHERWISE INDICATED.

9. INSTALL DRAINAGE SYSTEM BEHIND THE WALL AS INDICATED ON THE APPROVED CONTRACT DRAWINGS.

10. DISCOVERY OF SUBSURFACE GROUNDWATER SHALL BE REPORTED IMMEDIATELY TO THE REPRESENTATIVE FOR ADDITIONAL DRAINAGE CONSIDERATIONS.

11. INSTALL THE GRAVIX UNITS AS SHOWN ON THE APPROVED DESIGN DRAWINGS. ERECTION OF THE UNITS TYPICALLY SHOULD BEGIN AT THE LOWEST ELEVATION AND PROCEED LATERALLY ALONG THE WALL LENGTH. WHERE A WALL MEETS A FIXED STRUCTURE OR A CRITICAL LOCATION SUCH AS A TURNING POINT, ERECTION SHOULD BEGIN AT THAT POINT, PROVIDED THE SITE CONFIGURATION IS SUITABLE.

12. WALL INSTALLATION TOLERANCE:

OVERALL BATTER	2.0 DEGREES +/–
HORIZONTAL ALIGNMENT	1/2" AS MEASURED OVER 10' SPAN
VERTICAL ALIGNMENT	1/2" AS MEASURED OVER 10' SPAN
VERTICAL JOINT WIDTH	1/8" TO 7/8"

13. IN THE CASE OF BATTERED WALLS, GRAVIX UNITS SHOULD BE SET AT THE BATTER RATE OF THE STRUCTURE. IN THE CASE OF VERTICAL WALLS, GRAVIX BLOCKS SHOULD BE SET SUCH THAT THE FRONT FACE IS VERTICAL.

14. HORIZONTAL JOINT MATERIAL SHALL BE 6" WIDE MINIMUM POLYPROPYLENE NEEDLE–PUNCHED NONWOVEN FABRIC MEETING THE FOLLOWING CRITERIA:

WEIGHT (TYPICAL)	OZ/SY	ASTM D5261	16.0
GRAB TENSILE	LBS	ASTM D4632	380
GRAB ELONGATION	%	ASTM D4632	50
TRAPEZOID TEAR	LBS	ASTM D4533	145
PUNCTURE RESISTANCE	LBS	ASTM D6241	240
PERMITTIVITY	1/SEC	ASTM D4491	0.7
WATER FLOW	GPM/SF	ASTM D4491	50
A.O.S	U.S. SIEVE	ASTM D4751	100
U.V. RESISTANCE	% / HRS	ASTM D4355	70/500

17. VERTICAL JOINT (STONE BACKFILL – LESS THAN 25% FINES):
    - 3/4" SPACE
    - 12" WIDE PENNDOT CLASS 4, TYPE A, NEEDLE–PUNCHED NON–WOVEN FILTER FABRIC
    - PROVIDE MINIMUM WIDTH AND LAP OF THE FABRIC AS FOLLOWS: VERTICAL JOINT = 12"; LAP = 4"

18. GRAVIX UNITS VERTICAL JOINT WIDTH OF 3/4" SHOULD BE VERIFIED UPON PLACEMENT OF EACH UNIT. FOR CURVED STRUCTURES THE JOINT OPENING IS MEASURED AT THE FRONT FACE OF THE UNIT.

19. IMPERFECTIONS ON UNITS CAN BE REPAIRED IN ACCORDANCE WITH PUBLICATION 145.

20. INSTALL THE HORIZONTAL JOINT MATERIAL ON THE TOP OF THE FRONT FACE OF THE GRAVIX UNIT PRIOR TO STACKING A UNIT ON TOP. ADHESIVE PLACED 2" FROM FRONT FACE USING 1/4" BEAD NON CONTINUOUS, 6" ON 6" OFF ALONG LENGTH OF JOINT MATERIAL. FILTER FABRIC ADHESIVE SHALL BE GRAVIX ADHESIVE, 100% POLYURETHANE OR ENGINEER APPROVED EQUILIVENT. THE HORIZONTAL JOINT MATERIAL SHOULD BE PLACED IN LINE WITH THE FRONT EDGE OF THE FRONT FACE. (ON TEXTURED FACE FRONT EDGE IS BOTTOM OF CREVICES)

21. INSTALL THE VERTICAL JOINT BACKING FABRIC CENTERED ON THE JOINT. TAKE THE NECESSARY PRECAUTIONS TO CONFIRM THE FABRIC IS NOT DISPLACED DURING THE BACKFILL OPERATION. ADHESIVE PLACED 3" FROM THE UNIT SIDE EDGE SHALL BE WITH A CONTINUOUS 1/4" BEAD ON EACH SIDE OF THE JOINT TO HOLD FABRIC IN PLACE DURING BACKFILLING.

22. FILL THE INTERIOR BETWEEN THE STEM AREA OF EACH SUCCESSIVE COURSE OF THE GRAVIX UNITS WITH SPECIFIED BACKFILL MATERIAL. FILL UNITS IN NO MORE THAN 8" UNIFORM LAYERS (LIFT THICKNESS) AND THOROUGHLY CONSOLIDATE WITH A VIBRATORY TAMPING DEVICE.

23. BACKFILL PLACEMENT SHALL CLOSELY FOLLOW THE ERECTION OF EACH COURSE OF GRAVIX UNITS. BACKFILL SHALL BE PLACED IN APPROXIMATE EQUAL AMOUNTS ON EACH SIDE OF THE STEMS TO AVOID DISPLACEMENT OF THE UNITS. BACKFILL MAY BE CAREFULLY DISCHARGED DIRECTLY ON TOP OF THE STEMS TO FACILITATE THIS REQUIREMENT. THE BACKFILL SHOULD BE SLOPED SO THAT THE SURFACE DRAINAGE IS AWAY FROM THE FRONT FACE OF THE UNIT. LIFT THICKNESS SHALL BE DECREASED AS NEEDED TO OBTAIN THE SPECIFIED DENSITY. COMPACTION SHOULD PROCEED FROM THE BACK–FACE OF THE UNIT TOWARD THE END OF THE STEM. WHENEVER A COMPACTION TEST FAILS, NO ADDITIONAL BACKFILL SHALL BE PLACED OVER THE AREA UNTIL THE LIFT IS RE–COMPACTED AND A PASSING COMPACTION TEST IS ACHIEVED.

24. COMPACT BACKFILL AND DRAINAGE BLANKET IN ACCORDANCE WITH PUBLICATION 408 SECTION 206.3(b).

25. FOR WALLS IN EXCESS OF 20' IN HEIGHT OCCUR, THE FINISHED GRADE IN FRONT OF THE WALL SHALL BE PLACED AND COMPACTED BEFORE WALL CONSTRUCTION HEIGHTS EXCEED 8'.

26. IT IS THE CONTRACTOR'S RESPONSIBILITY TO DETERMINE THE LOCATION OF ANY GUIDE RAIL POSTS BEHIND THE RETAINING WALL AND COORDINATE LOCATION TO AVOID GRAVIX STEMS. ANY DAMAGE DONE TO THE GRAVIX UNITS DUE TO THE INSTALLATION OF THE GUIDE RAIL SHALL BE REPAIRED BY THE CONTRACTOR AT NO ADDITIONAL EXPENSE TO THE DEPARTMENT.

27. IF EXISTING OR FUTURE STRUCTURES, PIPES, FOUNDATIONS OR GUIDE RAIL POSTS WITHIN THE GRAVITY MASS VOLUME INTERFERE WITH THE NORMAL PLACEMENT OF GRAVIX UNITS AND SPECIFIC DIRECTION HAS NOT BEEN PROVIDED ON THE PLANS, THE CONTRACTOR SHALL NOTIFY REPRESENTATIVE TO DETERMINE WHAT COURSE OF ACTION SHOULD BE TAKEN.

28. THE CONTRACTOR IS RESPONSIBLE FOR CONTROLLING STORM WATER DRAINAGE IN THE VICINITY OF THE WALL DURING CONSTRUCTION. STORM WATER RUNOFF IS TO BE COLLECTED AND DISCHARGED AWAY FROM THE WALL. BACKFILL SHALL BE GRADED AWAY FROM THE WALL FACE AND COMPACTED TO TEMP 95% STANDARD PROCTOR AT THE END OF EACH WORK DAY TO PREVENT PONDING OF WATER ON THE SURFACE OF THE REINFORCED SOIL MASS.

29. PERMANENT DRAINAGE AND SITE GRADING SHALL BE PERFORMED TO PREVENT RUNOFF FROM BEING DIRECTED OVER THE WALL FACE OR ALLOWED TO POND ABOVE THE WALL GRAVITY MASS.

30. SURFACE WATER SHALL NOT BE ALLOWED TO RUN ALONG THE TOE OF THE WALL PRIOR TO CONSTRUCTION OF SCOUR PROTECTION.

31. FOR HORIZONTAL DRAIN PIPES, PROVIDE NONFERROUS PIPE WITH A 100–YEAR DESIGN LIFE AND WATERTIGHT JOINTS, MEETING THE REQUIREMENTS OF PUB. 408, SECTION 601.2. FOR THERMOPLASTIC PIPES, PROVIDE WATERTIGHT JOINTS IN ACCORDANCE WITH ASTM D3212. FOR CONCRETE PIPES, PROVIDE WATERTIGHT JOINTS IN ACCORDANCE WITH ASTM C443. TAKE SPECIAL CARE IN DETAILING TO MAINTAIN INTACT PIPE JOINTS.

32. RETAINING WALLS IN CURVES WILL FORM A SERIES OF SHORT CHORDS TO MATCH DESIRED WALL ALIGNMENT.

33. TEMPORARY SAFETY FENCE SHALL BE INSTALLED MEETING CURRENT OSHA STANDARDS UNTIL PERMANENT FENCE (DESIGNED BY OTHERS) IS INSTALLED IF REQUIRED.

34. AT ALL TIMES THE CONTRACTOR SHALL BE SOLELY RESPONSIBLE FOR THE CONDITIONS OF THE JOBSITE INCLUDING SAFETY OF PERSONS AND PROPERTY. THE ENGINEER'S PRESENCE AT THE JOB SITE FOR REVIEW OF WORK DOES NOT IMPLY CONFIRMATION OF THE ADEQUACY OF THE CONTRACTOR'S MEANS OR METHODS OF CONSTRUCTION. THE CONTRACTOR IS RESPONSIBLE FOR THE COMPLIANCE WITH OSHA REGULATIONS.

35. INSTALLATION OF GRAVIX RETAINING WALL SYSTEM TO BE PERFORMED ACCORDING TO THE GRAVIX INSTALLATION MANUAL PROVIDED BY EARTH WALL PRODUCTS, LLC. EXCEPT WHERE THE MANUAL CONFILICTS WITH PENNDOT STANDARDS OR PUBLICATIONS.

12/13/2019

© Copyright 2018 by Earth Wall Products, LLC. All rights reserved. This document is the property of Earth Wall Products, LLC. It is to be used only for the specific project referred to or identified herein and is not to be used on other projects, in whole or in part, except by the express written agreement of Earth Wall Products, LLC.

THIS SHEET PLOTS ON 22" x 34" ANSI D

GRAVIX Precast Wall System (2019–10–28) REV.dwg
10/28/2019 12:04 PM

REVISIONS

REV.	DESCRIPTION	BY	DATE
2	UPDATED PER REVIEW COMMENTS	TR	08/31/14
3	UPDATED PER REVIEW COMMENTS	TR	12/21/18
4	UPDATED PER REVIEW COMMENTS	TDC	7/9/19
5	UPDATED PER REVIEW COMMENTS	TDC	7/11/19
6	UPDATED PER REVIEW COMMENTS	TDC	9/27/19
7	UPDATED PER REVIEW COMMENTS	TDC	10/28/19

GRAVIX
PennDOT Precast Wall System
GRAVIX IS A LICENSED PRODUCT OF EARTH WALL PRODUCTS, LLC

I CERTIFY THAT ALL ASSUMPTIONS MADE IN DESIGNING THIS WALL HAVE BEEN VALIDATED THROUGH CONSTRUCTION DETAILS, SPECIAL NOTES AND / OR INSTRUCTIONS TO THE FABRICATOR, ERECTOR AND CONTRACTOR. CERTIFIED WITH RESPECT TO BEARING, SLIDING, INTERNAL STABILITY AND OVERTURNING OF THE GRAVIX STRUCTURE ONLY.

COMMONWEALTH OF PENNSYLVANIA
REGISTERED PROFESSIONAL ENGINEER
LANCE G. PARADIS
PE072419
PENNSYLVANIA
10/28/19

COMMONWEALTH OF PENNSYLVANIA
DEPARTMENT OF TRANSPORTATION

DRAWING NUMBER # 2016-296

CONSTRUCTION SPECIFICATIONS

LINE IS 2 INCHES AT FULL SIZE (IF NOT 2"–SCALE ACCORDINGLY)

DESIGNED TLR
DRAWN TDC
REVIEWED TLR

SHEET NUMBER
5 OF 52

UNITS SHOWN WITH OPTIONAL ARCHITECTURAL TREATMENT.

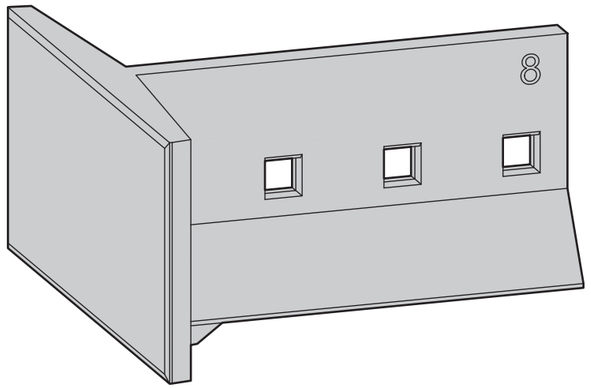

GRAVIX STANDARD UNIT

SEE SHEET 27 TO 34

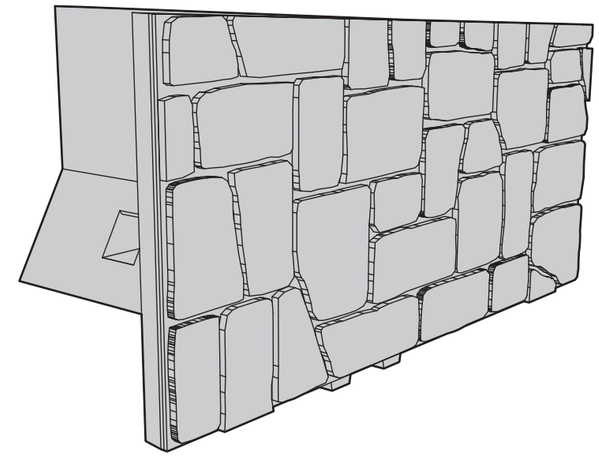

GRAVIX LEVELING UNIT

SEE SHEET 35 TO 38

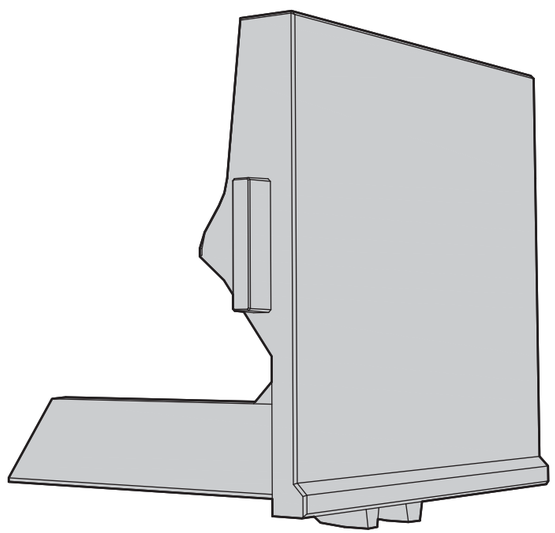

GRAVIX TRAFFIC BARRIER UNIT

SEE SHEET 43 TO 47

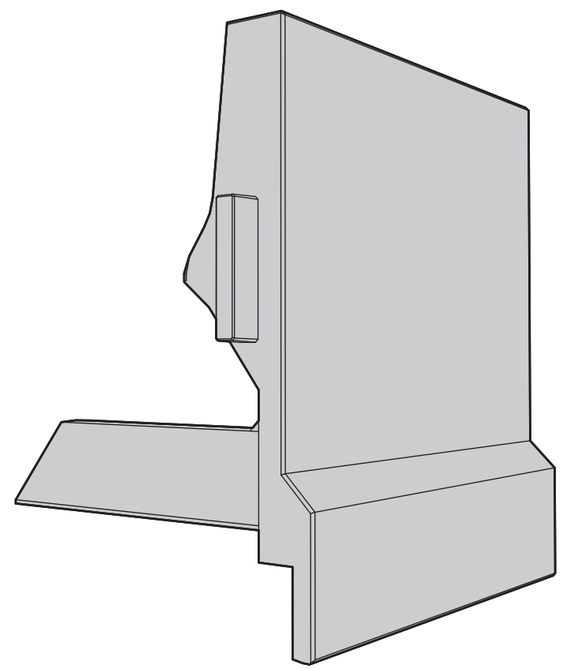

GRAVIX MSE TRAFFIC BARRIER UNIT

SEE SHEET 48 TO 52

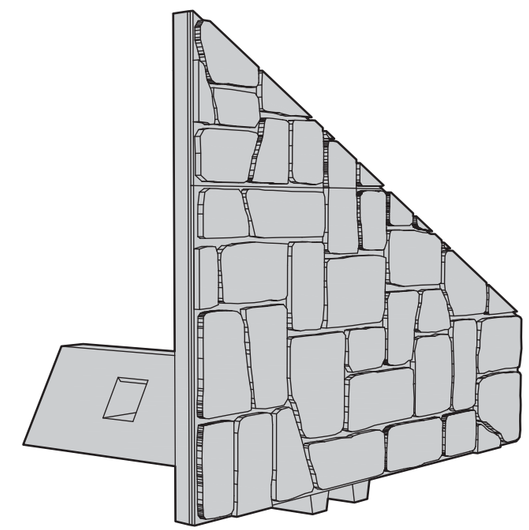

GRAVIX TOP UNIT

SEE SHEET 39 TO 42

12/13/2019

REVISIONS

REV.	DESCRIPTION	BY	DATE
2	UPDATED PER REVIEW COMMENTS	TR	08/31/14
3	UPDATED PER REVIEW COMMENTS	TR	12/21/18
4	UPDATED PER REVIEW COMMENTS	TDC	7/9/19
5	UPDATED PER REVIEW COMMENTS	TDC	7/11/19
6	UPDATED PER REVIEW COMMENTS	TDC	9/27/19
7	UPDATED PER REVIEW COMMENTS	TDC	10/28/19

GRAVIX

PennDOT Precast Wall System

GRAVIX IS A LICENSED PRODUCT OF EARTH WALL PRODUCTS, LLC

I CERTIFY THAT ALL ASSUMPTIONS MADE IN DESIGNING THIS WALL HAVE BEEN VALIDATED THROUGH CONSTRUCTION DETAILS, SPECIAL NOTES AND / OR INSTRUCTIONS TO THE FABRICATOR, ERECTOR AND CONTRACTOR. CERTIFIED WITH RESPECT TO BEARING, SLIDING, INTERNAL STABILITY AND OVERTURNING OF THE GRAVIX STRUCTURE ONLY.

COMMONWEALTH OF PENNSYLVANIA REGISTERED PROFESSIONAL LANCE G. SRAMEK PE037418 PENNSYLVANIA 10.23.19

COMMONWEALTH OF PENNSYLVANIA
DEPARTMENT OF TRANSPORTATION

DRAWING NUMBER # 2016-296

GRAVIX UNITS

LINE IS 2 INCHES AT FULL SIZE (IF NOT 2"—SCALE ACCORDINGLY)

DESIGNED TLR
DRAWN TDC
REVIEWED TLR

SHEET NUMBER
6 OF 52

© Copyright 2018 by Earth Wall Products, LLC. All rights reserved. This document is the property of Earth Wall Products, LLC. It is to be used only for the specific project referred to or identified herein and is not to be used on other projects, in whole or in part, except by the express written agreement of Earth Wall Products, LLC.

THIS SHEET PLOTS ON 22" x 34" ANSI D

GRAVIX Precast Wall System (2019-10-28) REV.dwg
10/28/2019 12:04 PM

THIS SHEET PLOTS ON 22" x 34" ANSI D

© Copyright 2018 by Earth Wall Products, LLC. All rights reserved. This document is the property of Earth Wall Products, LLC. It is to be used only for the specific project referred to or identified herein and is not to be used on other projects, in whole or in part, except by the express written agreement of Earth Wall Products, LLC.

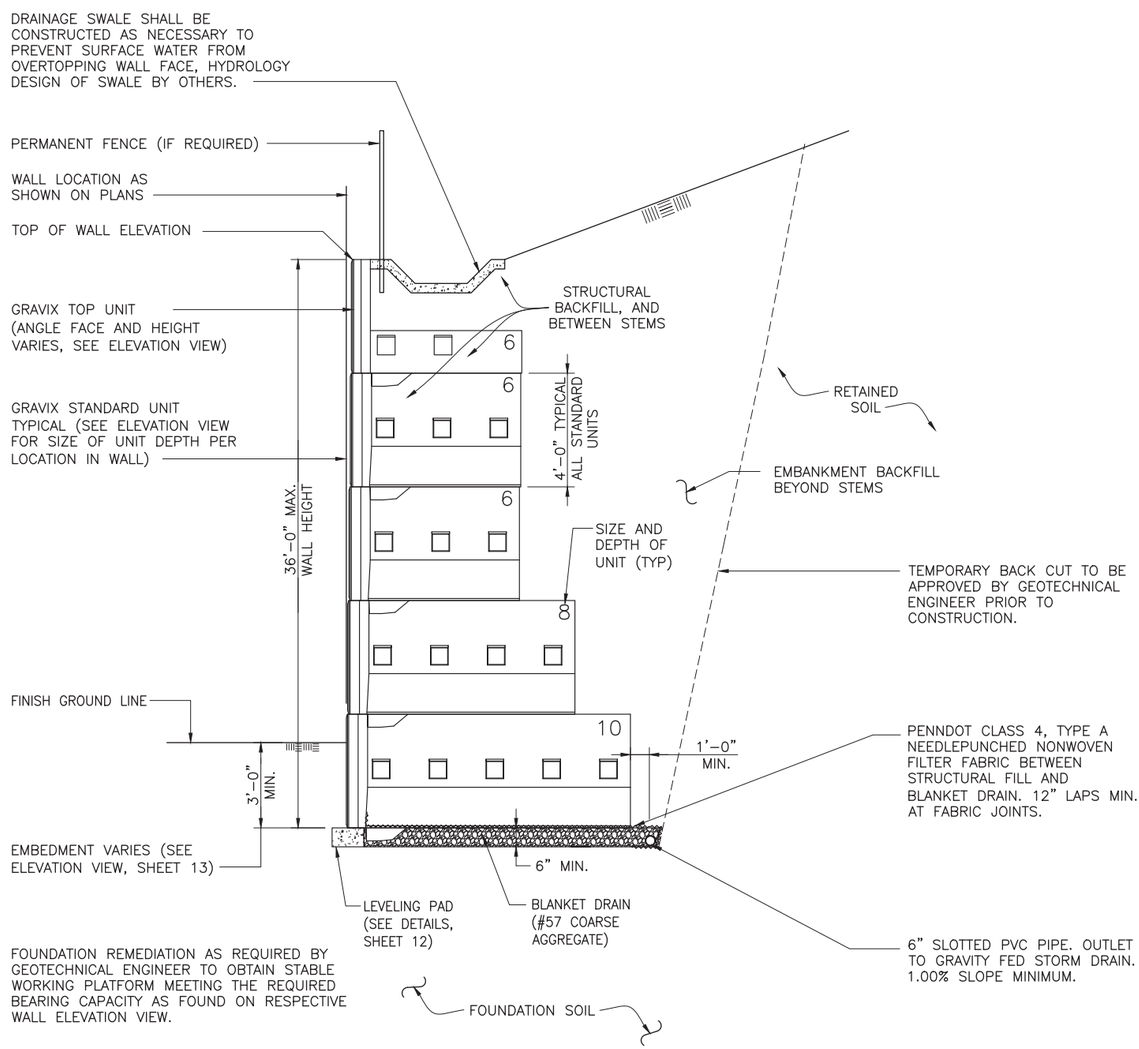

TYPICAL CUT CROSS SECTION

0 5 FT

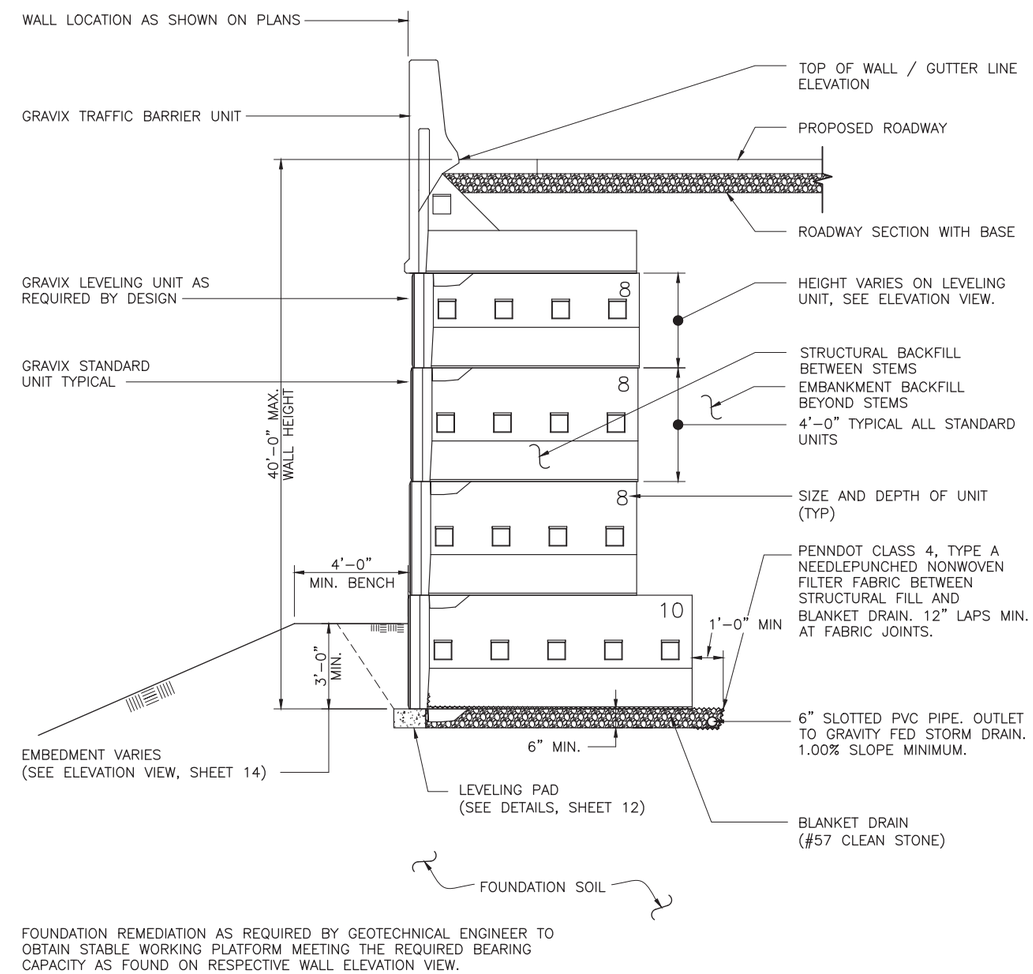

TYPICAL FILL CROSS SECTION

0 5 FT

12/13/2019

REVISIONS			
REV.	DESCRIPTION	BY	DATE
2	UPDATED PER REVIEW COMMENTS	TR	08/31/14
3	UPDATED PER REVIEW COMMENTS	TR	12/21/18
4	UPDATED PER REVIEW COMMENTS	TDC	7/9/19
5	UPDATED PER REVIEW COMMENTS	TDC	7/11/19
6	UPDATED PER REVIEW COMMENTS	TDC	9/27/19
7	UPDATED PER REVIEW COMMENTS	TDC	10/28/19

GRAVIX
PennDOT Precast Wall System
GRAVIX IS A LICENSED PRODUCT OF EARTH WALL PRODUCTS, LLC

I CERTIFY THAT ALL ASSUMPTIONS MADE IN DESIGNING THIS WALL HAVE BEEN VALIDATED THROUGH CONSTRUCTION DETAILS, SPECIAL NOTES AND / OR INSTRUCTIONS TO THE FABRICATOR, ERECTOR AND CONTRACTOR. CERTIFIED WITH RESPECT TO BEARING, SLIDING, INTERNAL STABILITY AND OVERTURNING OF THE GRAVIX STRUCTURE ONLY.

COMMONWEALTH OF PENNSYLVANIA
DEPARTMENT OF TRANSPORTATION

DRAWING NUMBER # 2016-296

TYPICAL CUT AND FILL CROSS SECTIONS

LINE IS 2 INCHES AT FULL SIZE (IF NOT 2"–SCALE ACCORDINGLY)

DESIGNED TLR
DRAWN TDC
REVIEWED TLR

SHEET NUMBER 7 OF 52

GRAVIX Precast Wall System (2019-10-28) REV.dwg
10/28/2019 12:04 PM

THIS SHEET PLOTS ON 22" x 34" ANSI D

© Copyright 2018 by Earth Wall Products, LLC. All rights reserved. This document is the property of Earth Wall Products, LLC. It is to be used only for the specific project referred to or identified herein and is not to be used on other projects, in whole or in part, except by the express written agreement of Earth Wall Products, LLC.

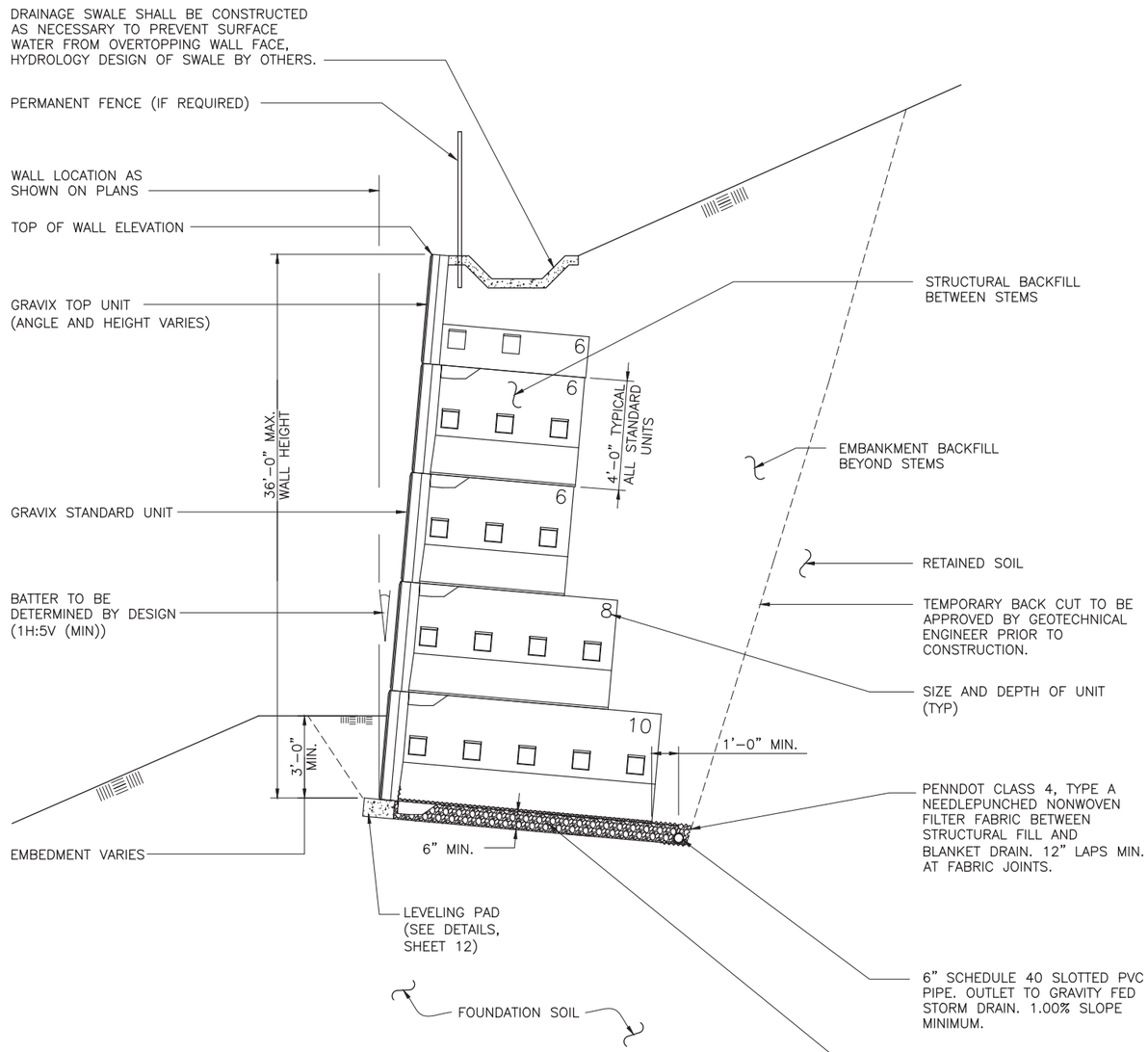

FOUNDATION REMEDIATION AS REQUIRED BY ON-SITE GEOTECHNICAL ENGINEER TO OBTAIN STABLE WORKING PLATFORM MEETING THE REQUIRED BEARING CAPACITY AS FOUND ON RESPECTIVE WALL ELEVATION VIEW.

TYPICAL BATTERED CUT CROSS SECTION

0 5 FT

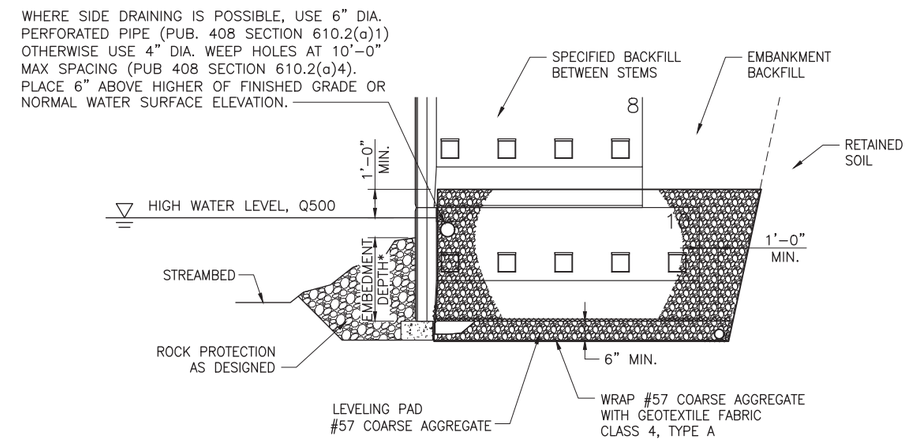

*EMBEDMENT DEPTH IS THE SCOUR DEPTH + 2'-0", BUT SHALL NOT BE TAKEN LESS THAN 6'-0".

TYPICAL DETAIL AT STREAM

0 5 FT

12/13/2019

GRAVIX Precast Wall System (2019-10-28) REV.dwg
10/28/2019 12:04 PM

REVISIONS

REV.	DESCRIPTION	BY	DATE
2	UPDATED PER REVIEW COMMENTS	TR	08/31/14
3	UPDATED PER REVIEW COMMENTS	TR	12/21/18
4	UPDATED PER REVIEW COMMENTS	TDC	7/9/19
5	UPDATED PER REVIEW COMMENTS	TDC	7/11/19
6	UPDATED PER REVIEW COMMENTS	TDC	9/27/19
7	UPDATED PER REVIEW COMMENTS	TDC	10/28/19

GRAVIX
PennDOT Precast Wall System
GRAVIX IS A LICENSED PRODUCT OF EARTH WALL PRODUCTS, LLC

I CERTIFY THAT ALL ASSUMPTIONS MADE IN DESIGNING THIS WALL HAVE BEEN VALIDATED THROUGH CONSTRUCTION DETAILS, SPECIAL NOTES AND / OR INSTRUCTIONS TO THE FABRICATOR, ERECTOR AND CONTRACTOR. CERTIFIED WITH RESPECT TO BEARING, SLIDING, INTERNAL STABILITY AND OVERTURNING OF THE GRAVIX STRUCTURE ONLY.

COMMONWEALTH OF PENNSYLVANIA
DEPARTMENT OF TRANSPORTATION

DRAWING NUMBER # 2016-296

TYPICAL BATTERED CUT CROSS SECTION

LINE IS 2 INCHES AT FULL SIZE (IF NOT 2"-SCALE ACCORDINGLY)

DESIGNED TLR
DRAWN TDC
REVIEWED TLR

SHEET NUMBER
8 OF 52

THIS SHEET PLOTS ON 22" x 34" ANSI D

© Copyright 2018 by Earth Wall Products, LLC. All rights reserved. This document is the property of Earth Wall Products, LLC. It is to be used only for the specific project referred to or identified herein and is not to be used on other projects, in whole or in part, except by the express written agreement of Earth Wall Products, LLC.

GRAVIX Precast Wall System (2019-10-28) REV.dwg
10/28/2019 12:04 PM

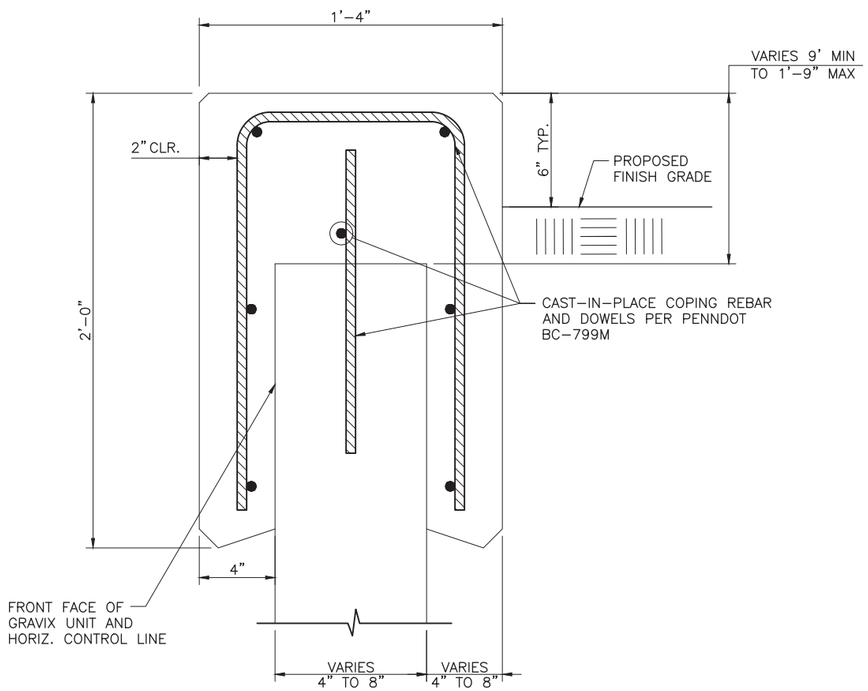

CAST-IN-PLACE COPING (OPTION)

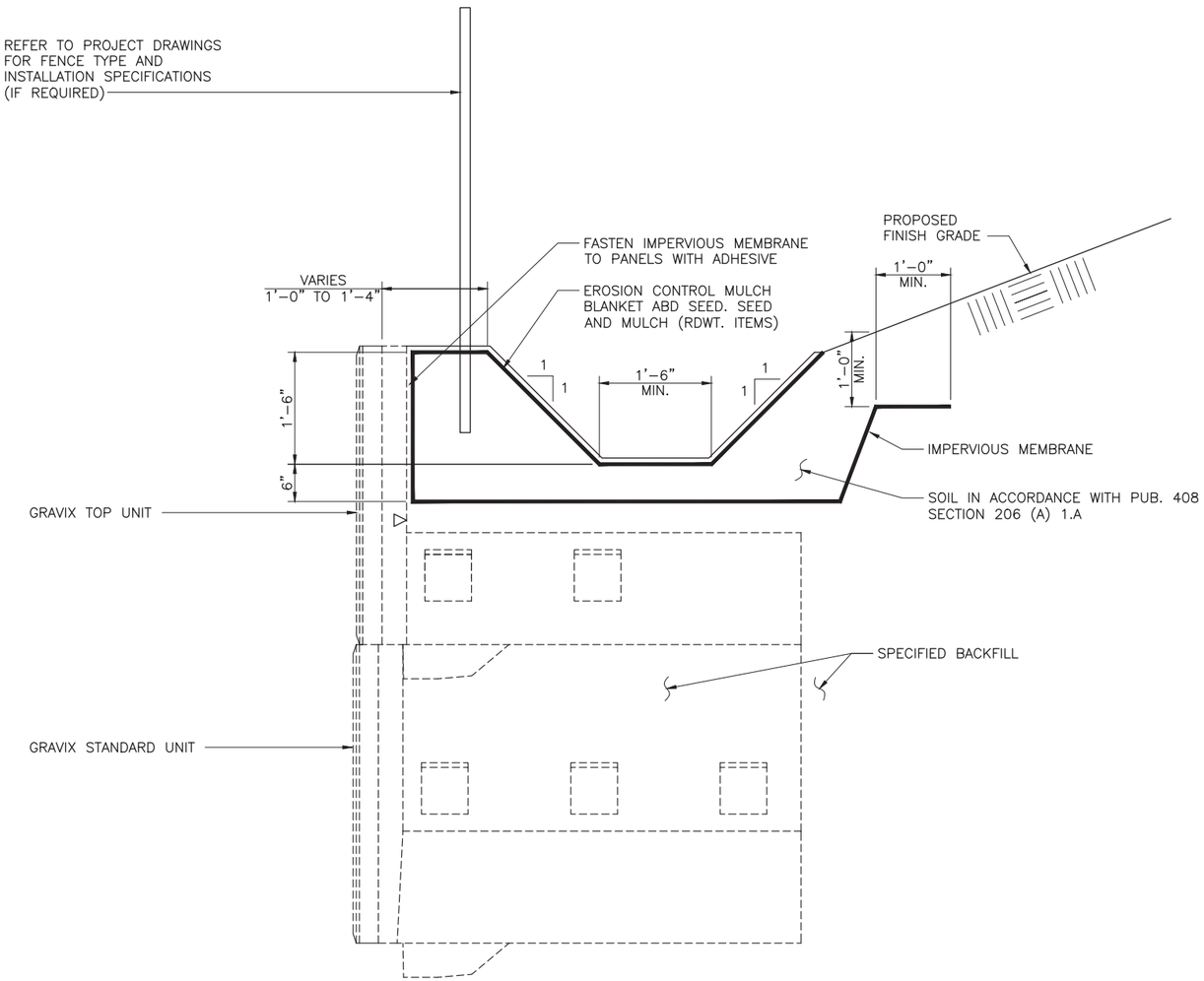

DRAINAGE DITCH DETAIL

12/13/2019

REVISIONS

REV.	DESCRIPTION	BY	DATE
2	UPDATED PER REVIEW COMMENTS	TR	08/31/14
3	UPDATED PER REVIEW COMMENTS	TR	12/21/18
4	UPDATED PER REVIEW COMMENTS	TDC	7/9/19
5	UPDATED PER REVIEW COMMENTS	TDC	7/11/19
6	UPDATED PER REVIEW COMMENTS	TDC	9/27/19
7	UPDATED PER REVIEW COMMENTS	TDC	10/28/19

GRAVIX
PennDOT Precast Wall System
GRAVIX IS A LICENSED PRODUCT OF EARTH WALL PRODUCTS, LLC

I CERTIFY THAT ALL ASSUMPTIONS MADE IN DESIGNING THIS WALL HAVE BEEN VALIDATED THROUGH CONSTRUCTION DETAILS, SPECIAL NOTES AND / OR INSTRUCTIONS TO THE FABRICATOR, ERECTOR AND CONTRACTOR. CERTIFIED WITH RESPECT TO BEARING, SLIDING, INTERNAL STABILITY AND OVERTURNING OF THE GRAVIX STRUCTURE ONLY.

COMMONWEALTH OF PENNSYLVANIA
REGISTERED PROFESSIONAL ENGINEER
LANCE G. PARADISO
PE027416
10/28/19

COMMONWEALTH OF PENNSYLVANIA
DEPARTMENT OF TRANSPORTATION

DRAWING NUMBER # 2016-296

DETAILS CONCRETE DITCH, FENCE AND COPING OPTION

LINE IS 2 INCHES
AT FULL SIZE
(IF NOT 2"-SCALE ACCORDINGLY)

DESIGNED TLR
DRAWN TDC
REVIEWED TLR

SHEET NUMBER
9 OF 52

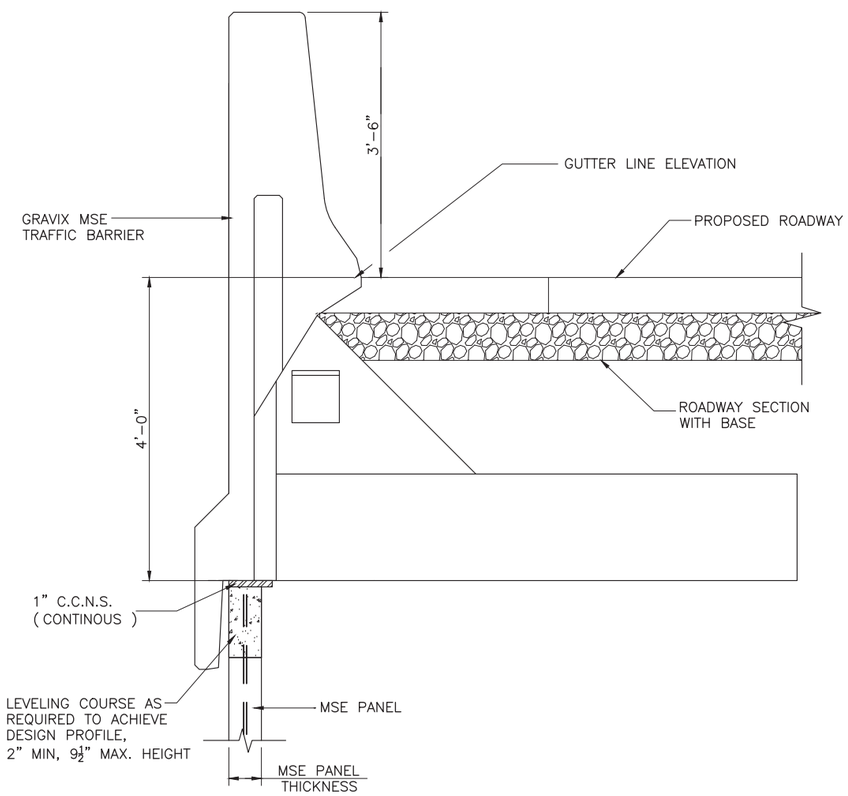

GRAVIX MSE TRAFFIC BARRIER UNIT ON AN MSE WALL DETAIL

SCALE: NOT TO SCALE

12/13/2019

REVISIONS			
REV.	DESCRIPTION	BY	DATE
2	UPDATED PER REVIEW COMMENTS	TR	08/31/14
3	UPDATED PER REVIEW COMMENTS	TR	12/21/18
4	UPDATED PER REVIEW COMMENTS	TDC	7/9/19
5	UPDATED PER REVIEW COMMENTS	TDC	7/11/19
6	UPDATED PER REVIEW COMMENTS	TDC	9/27/19
7	UPDATED PER REVIEW COMMENTS	TDC	10/28/19

GRAVIX

PennDOT Precast Wall System

GRAVIX IS A LICENSED PRODUCT OF EARTH WALL PRODUCTS, LLC

I CERTIFY THAT ALL ASSUMPTIONS MADE IN DESIGNING THIS WALL HAVE BEEN VALIDATED THROUGH CONSTRUCTION DETAILS, SPECIAL NOTES AND / OR INSTRUCTIONS TO THE FABRICATOR, ERECTOR AND CONTRACTOR. CERTIFIED WITH RESPECT TO BEARING, SLIDING, INTERNAL STABILITY AND OVERTURNING OF THE GRAVIX STRUCTURE ONLY.

COMMONWEALTH OF PENNSYLVANIA
DEPARTMENT OF TRANSPORTATION

DRAWING NUMBER # 2016-296

CONVENTIONAL PRECAST
TRAFFIC BARRIER DETAIL

LINE IS 2 INCHES AT FULL SIZE (IF NOT 2"–SCALE ACCORDINGLY)

DESIGNED TLR
DRAWN TDC
REVIEWED TLR

SHEET NUMBER
10 OF 52

THIS SHEET PLOTS ON 22" x 34" ANSI D

© Copyright 2018 by Earth Wall Products, LLC. All rights reserved. This document is the property of Earth Wall Products, LLC. It is to be used only for the specific project referred to or identified herein and is not to be used on other projects, in whole or in part, except by the express written agreement of Earth Wall Products, LLC.

GRAVIX Precast Wall System (2019-10-28) REV.dwg
10/28/2019 12:04 PM

THIS SHEET PLOTS ON 22" x 34" ANSI D

© Copyright 2018 by Earth Wall Products, LLC. All rights reserved. This document is the property of Earth Wall Products, LLC. It is to be used only for the specific project referred to or identified herein and is not to be used on other projects, in whole or in part, except by the express written agreement of Earth Wall Products, LLC.

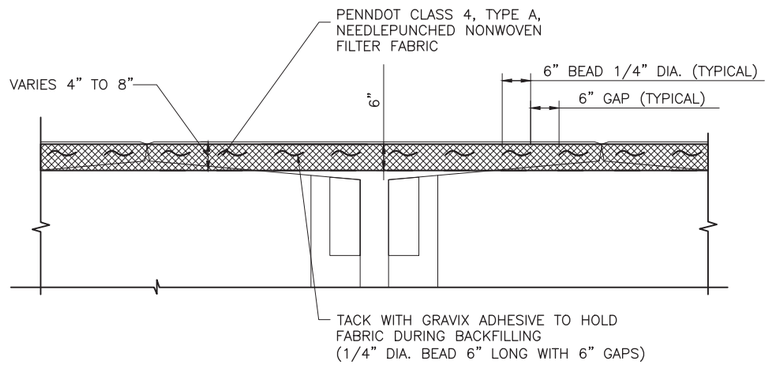

HORIZONTAL JOINT DETAIL PLAN VIEW

0 1 2 3 FT

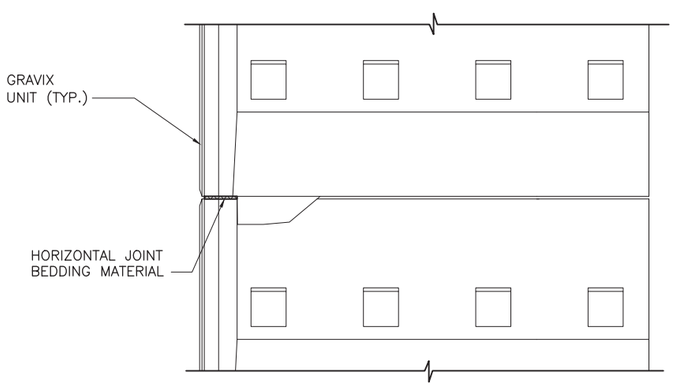

HORIZONTAL JOINT DETAIL SIDE VIEW

0 1 2 3 FT

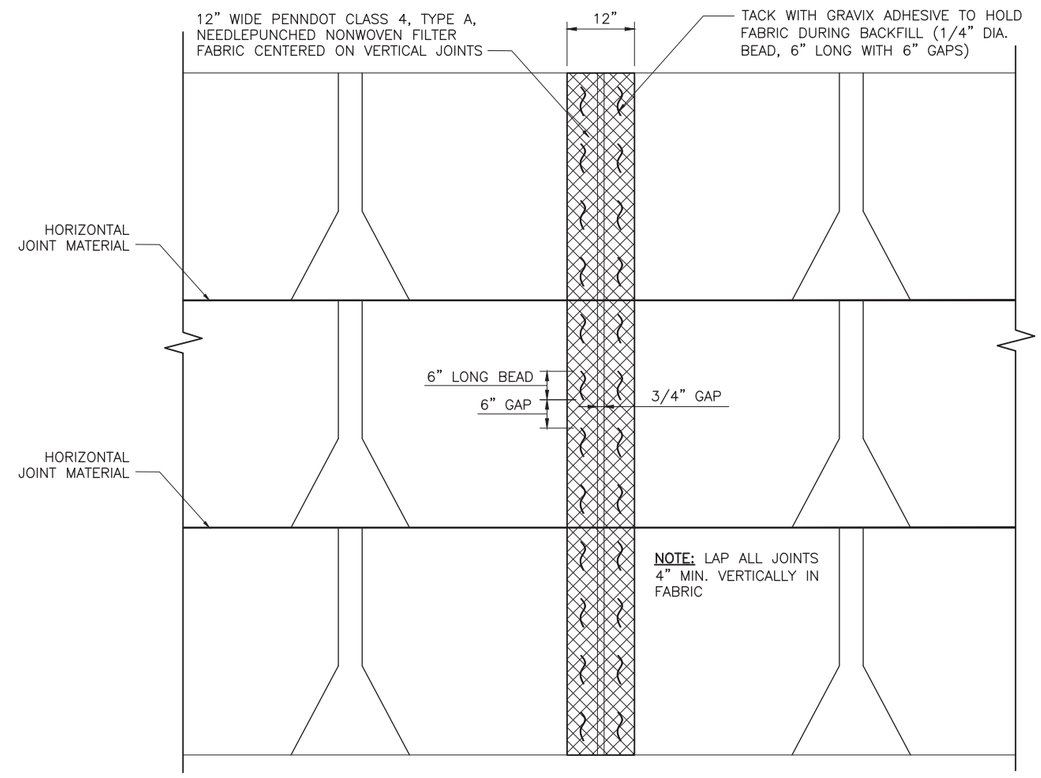

BACKFILL WITH STONE – ≤ 25% FINES (PASSING THE NO. 200 SIEVE) JOINT DETAILS

0 1 2 3 FT

12/13/2019

GRAVIX Precast Wall System (2019-10-28) REV.dwg
10/28/2019 12:04 PM

REVISIONS

REV.	DESCRIPTION	BY	DATE
2	UPDATED PER REVIEW COMMENTS	TR	08/31/14
3	UPDATED PER REVIEW COMMENTS	TR	12/21/18
4	UPDATED PER REVIEW COMMENTS	TDC	7/9/19
5	UPDATED PER REVIEW COMMENTS	TDC	7/11/19
6	UPDATED PER REVIEW COMMENTS	TDC	9/27/19
7	UPDATED PER REVIEW COMMENTS	TDC	10/28/19

GRAVIX
PennDOT Precast Wall System
GRAVIX IS A LICENSED PRODUCT OF EARTH WALL PRODUCTS, LLC

I CERTIFY THAT ALL ASSUMPTIONS MADE IN DESIGNING THIS WALL HAVE BEEN VALIDATED THROUGH CONSTRUCTION DETAILS, SPECIAL NOTES AND / OR INSTRUCTIONS TO THE FABRICATOR, ERECTOR AND CONTRACTOR. CERTIFIED WITH RESPECT TO BEARING, SLIDING, INTERNAL STABILITY AND OVERTURNING OF THE GRAVIX STRUCTURE ONLY.

COMMONWEALTH OF PENNSYLVANIA
REGISTERED PROFESSIONAL ENGINEER
LANCE G. PARADISO
PE057418
10/28/19

COMMONWEALTH OF PENNSYLVANIA
DEPARTMENT OF TRANSPORTATION

DRAWING NUMBER # 2016-296

DETAILS VERTICAL AND HORIZONTAL JOINT

LINE IS 2 INCHES AT FULL SIZE (IF NOT 2"–SCALE ACCORDINGLY)

DESIGNED TLR
DRAWN TDC
REVIEWED TLR

SHEET NUMBER
11 OF 52

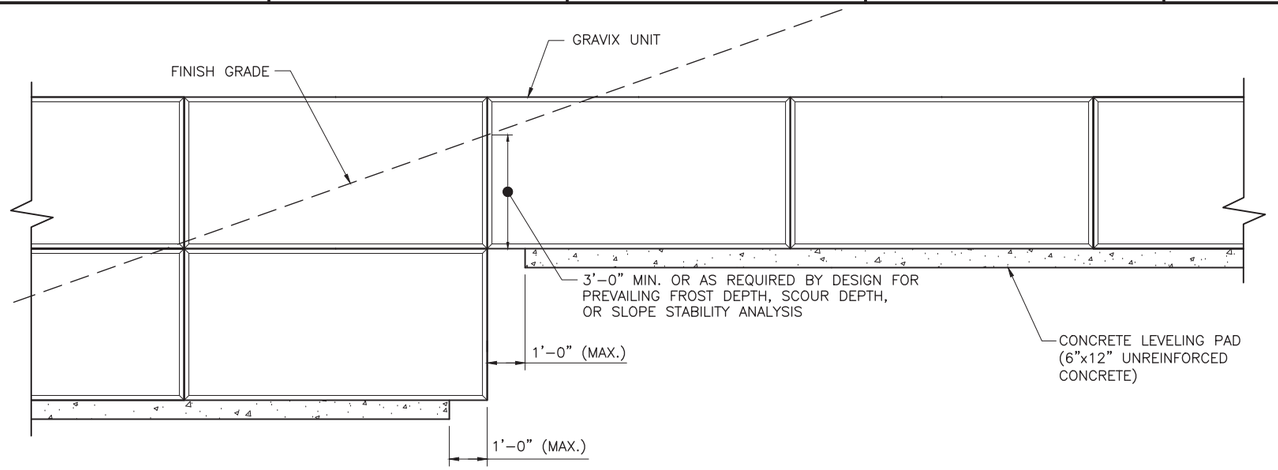

TYPICAL LEVELING PAD ELEVATION

SCALE: N.T.S.

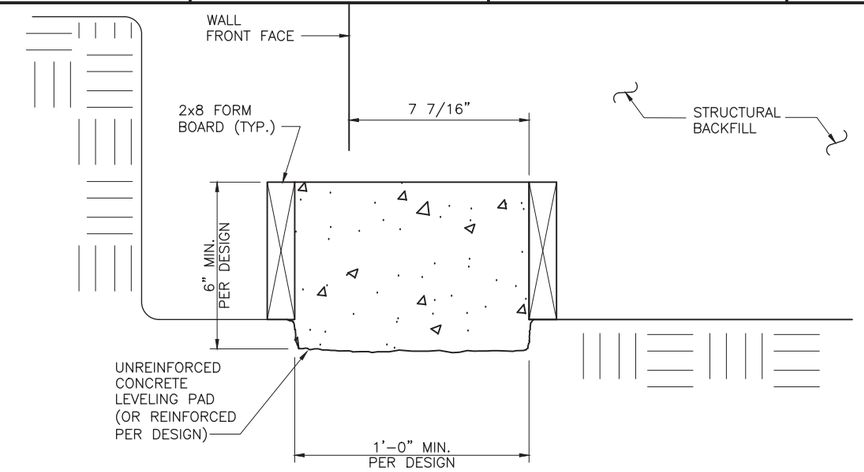

LEVELING PAD CROSS SECTION

0 3 6 9 12 IN

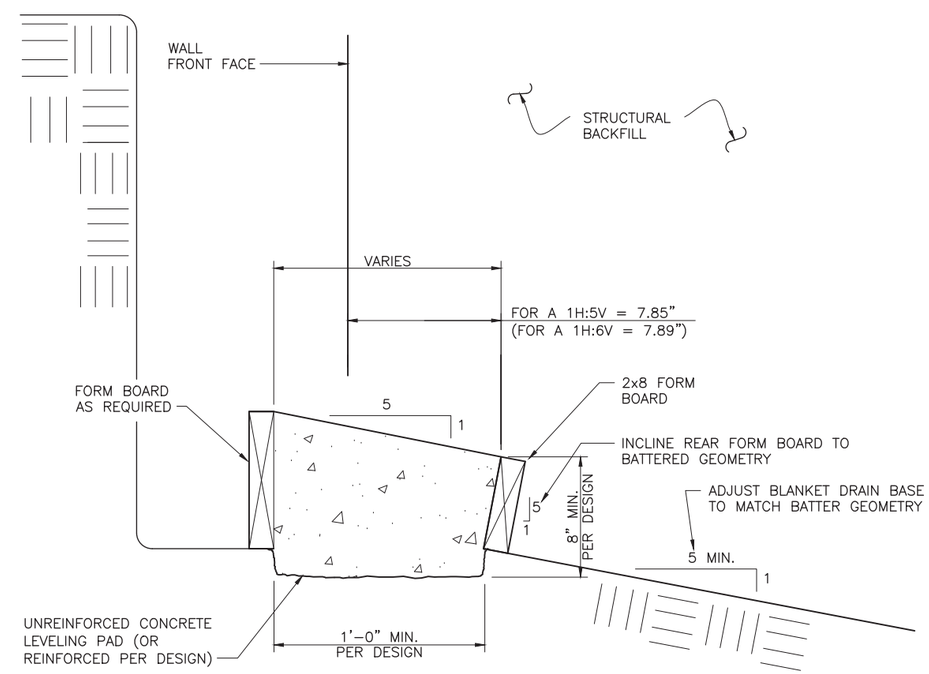

NOTE: THE ABOVE DETAIL IS DRAWN USING A 1H:5V BATTER. ADJUST THE BATTER THROUGHOUT FOR OTHER DESIGN BATTERS.

BATTERED WALL LEVELING PAD DETAIL

0 3 6 9 12 IN

12/13/2019

© Copyright 2018 by Earth Wall Products, LLC. All rights reserved. This document is the property of Earth Wall Products, LLC. It is to be used only for the specific project referred to or identified herein and is not to be used on other projects, in whole or in part, except by the express written agreement of Earth Wall Products, LLC.

THIS SHEET PLOTS ON 22" x 34" ANSI D

GRAVIX Precast Wall System (2019-10-28) REV.dwg
10/28/2019 12:04 PM

REVISIONS

REV.	DESCRIPTION	BY	DATE
2	UPDATED PER REVIEW COMMENTS	TR	08/31/14
3	UPDATED PER REVIEW COMMENTS	TR	12/21/18
4	UPDATED PER REVIEW COMMENTS	TDC	7/9/19
5	UPDATED PER REVIEW COMMENTS	TDC	7/11/19
6	UPDATED PER REVIEW COMMENTS	TDC	9/27/19
7	UPDATED PER REVIEW COMMENTS	TDC	10/28/19

GRAVIX
PennDOT Precast Wall System
GRAVIX IS A LICENSED PRODUCT OF EARTH WALL PRODUCTS, LLC

I CERTIFY THAT ALL ASSUMPTIONS MADE IN DESIGNING THIS WALL HAVE BEEN VALIDATED THROUGH CONSTRUCTION DETAILS, SPECIAL NOTES AND / OR INSTRUCTIONS TO THE FABRICATOR, ERECTOR AND CONTRACTOR. CERTIFIED WITH RESPECT TO BEARING, SLIDING, INTERNAL STABILITY AND OVERTURNING OF THE GRAVIX STRUCTURE ONLY.

COMMONWEALTH OF PENNSYLVANIA
REGISTERED PROFESSIONAL ENGINEER LANCE G. JAMISON PENNSYLVANIA
10/28/19

COMMONWEALTH OF PENNSYLVANIA
DEPARTMENT OF TRANSPORTATION

DRAWING NUMBER # 2016-296

DETAILS LEVELING PAD

LINE IS 2 INCHES AT FULL SIZE (IF NOT 2"–SCALE ACCORDINGLY)

DESIGNED TLR
DRAWN TDC
REVIEWED TLR

SHEET NUMBER
12 OF 52

THIS SHEET PLOTS ON 22" x 34" ANSI D

© Copyright 2018 by Earth Wall Products, LLC. All rights reserved. This document is the property of Earth Wall Products, LLC. It is to be used only for the specific project referred to or identified herein and is not to be used on other projects, in whole or in part, except by the express written agreement of Earth Wall Products, LLC.

GRAVIX Precast Wall System (2019-10-28) REV.dwg
10/28/2019 12:04 PM

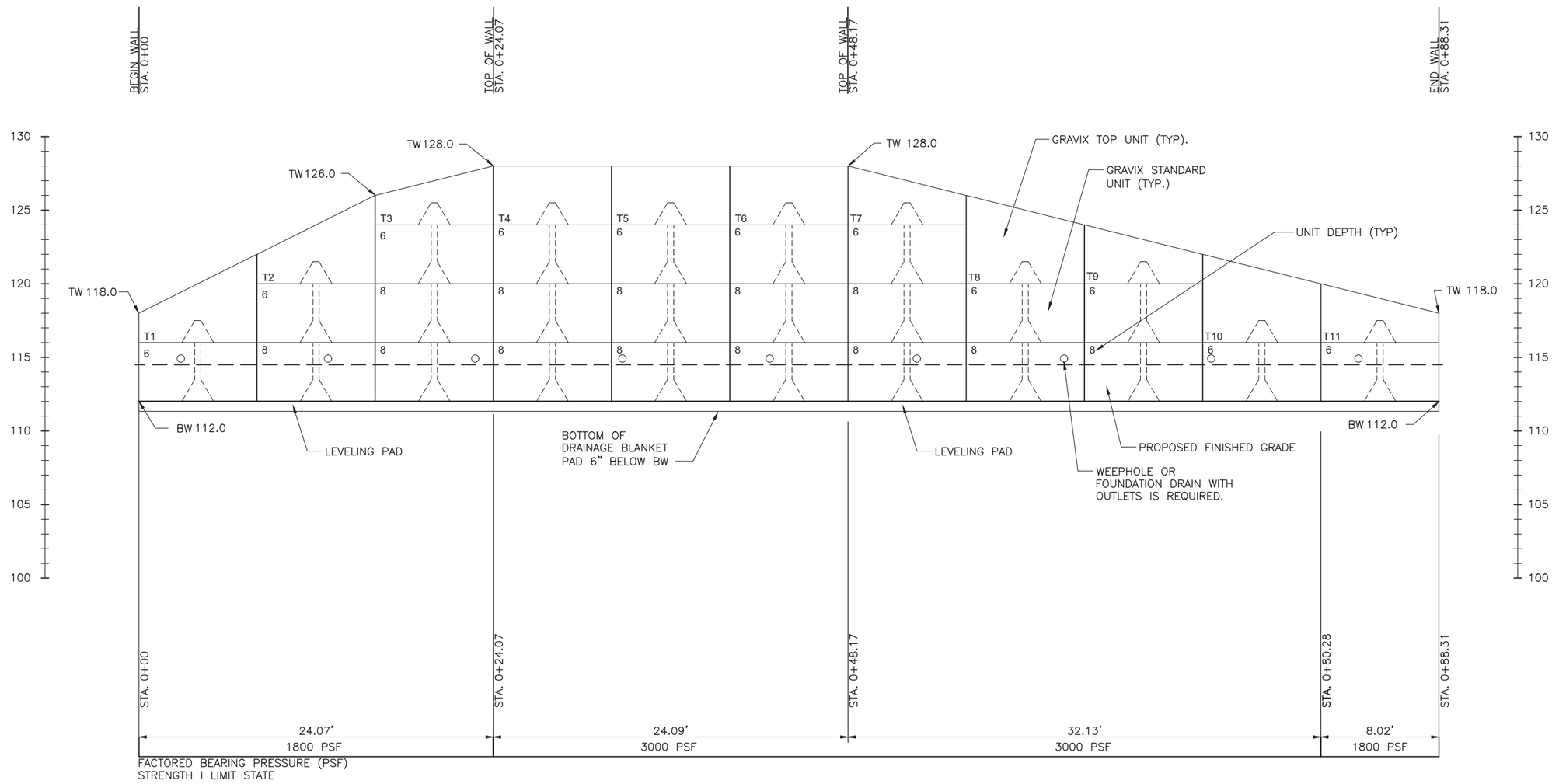

FRONT FACE ELEVATION VIEW (EXAMPLE WALL)

0 5 10 FT

12/13/2019

REVISIONS			
REV.	DESCRIPTION	BY	DATE
2	UPDATED PER REVIEW COMMENTS	TR	08/31/14
3	UPDATED PER REVIEW COMMENTS	TR	12/21/18
4	UPDATED PER REVIEW COMMENTS	TDC	7/9/19
5	UPDATED PER REVIEW COMMENTS	TDC	7/11/19
6	UPDATED PER REVIEW COMMENTS	TDC	9/27/19
7	UPDATED PER REVIEW COMMENTS	TDC	10/28/19

GRAVIX
PennDOT Precast Wall System
GRAVIX IS A LICENSED PRODUCT OF EARTH WALL PRODUCTS, LLC

I CERTIFY THAT ALL ASSUMPTIONS MADE IN DESIGNING THIS WALL HAVE BEEN VALIDATED THROUGH CONSTRUCTION DETAILS, SPECIAL NOTES AND / OR INSTRUCTIONS TO THE FABRICATOR, ERECTOR AND CONTRACTOR. CERTIFIED WITH RESPECT TO BEARING, SLIDING, INTERNAL STABILITY AND OVERTURNING OF THE GRAVIX STRUCTURE ONLY.

COMMONWEALTH OF PENNSYLVANIA
REGISTERED PROFESSIONAL
LANCE G. GRAMS
ENGINEER
PENNSYLVANIA
12/23/19

COMMONWEALTH OF PENNSYLVANIA
DEPARTMENT OF TRANSPORTATION

DRAWING NUMBER # 2016-296

ELEVATION VIEW WITH TOP UNIT

LINE IS 2 INCHES AT FULL SIZE (IF NOT 2"—SCALE ACCORDINGLY)

DESIGNED TLR
DRAWN TDC
REVIEWED TLR

SHEET NUMBER
13 OF 52

THIS SHEET PLOTS ON 22" x 34" ANSI D

© Copyright 2018 by Earth Wall Products, LLC. All rights reserved. This document is the property of Earth Wall Products, LLC. It is to be used only for the specific project referred to or identified herein and is not to be used on other projects, in whole or in part, except by the express written agreement of Earth Wall Products, LLC.

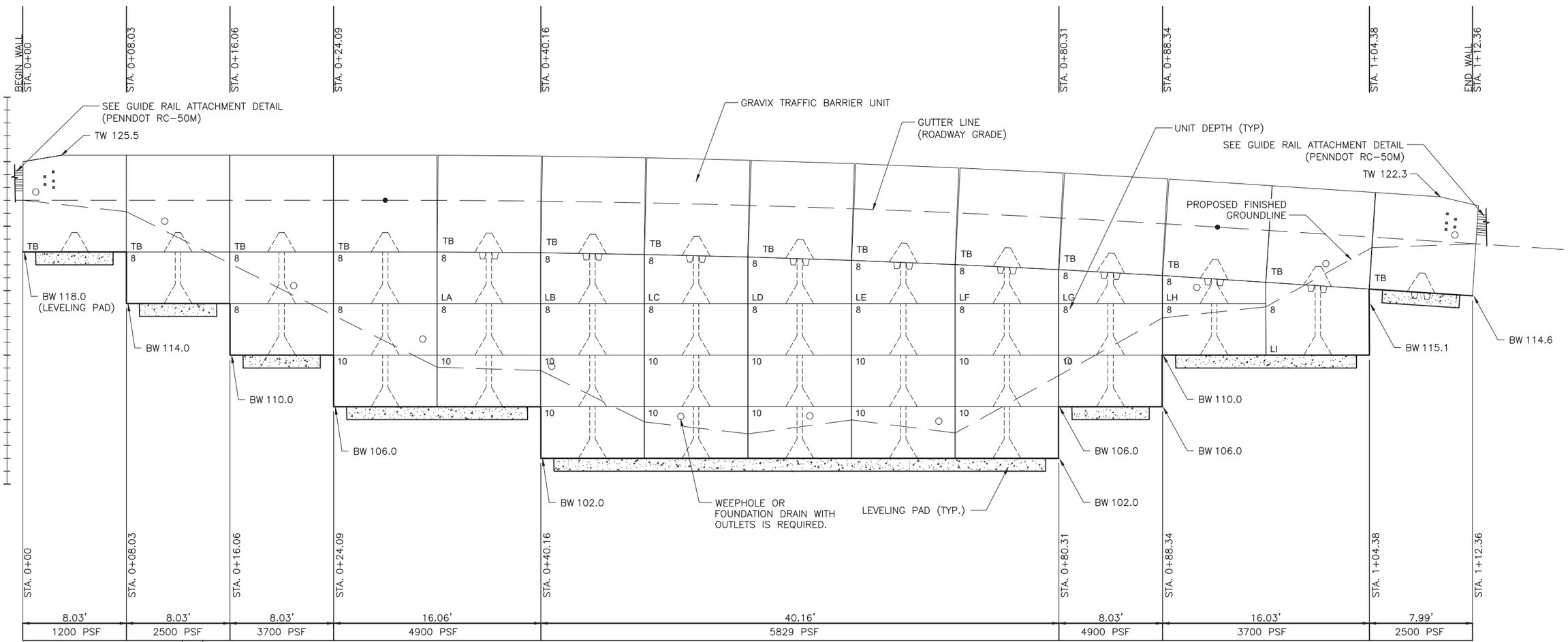

FRONT FACE ELEVATION VIEW (EXAMPLE WALL)

0 5 10 FT

12/13/2019

REVISIONS			
REV.	DESCRIPTION	BY	DATE
2	UPDATED PER REVIEW COMMENTS	TR	08/31/14
3	UPDATED PER REVIEW COMMENTS	TR	12/21/18
4	UPDATED PER REVIEW COMMENTS	TDC	7/9/19
5	UPDATED PER REVIEW COMMENTS	TDC	7/11/19
6	UPDATED PER REVIEW COMMENTS	TDC	9/27/19
7	UPDATED PER REVIEW COMMENTS	TDC	10/28/19

GRAVIX

PennDOT Precast Wall System

GRAVIX IS A LICENSED PRODUCT OF EARTH WALL PRODUCTS, LLC

I CERTIFY THAT ALL ASSUMPTIONS MADE IN DESIGNING THIS WALL HAVE BEEN VALIDATED THROUGH CONSTRUCTION DETAILS, SPECIAL NOTES AND / OR INSTRUCTIONS TO THE FABRICATOR, ERECTOR AND CONTRACTOR. CERTIFIED WITH RESPECT TO BEARING, SLIDING, INTERNAL STABILITY AND OVERTURNING OF THE GRAVIX STRUCTURE ONLY.

COMMONWEALTH OF PENNSYLVANIA
REGISTERED PROFESSIONAL
LANCE G. HARRIS
ENGINEER
PE057419
PENNSYLVANIA
10/28/19

COMMONWEALTH OF PENNSYLVANIA
DEPARTMENT OF TRANSPORTATION

DRAWING NUMBER # 2016-296

ELEVATION VIEW WITH TRAFFIC BARRIER

LINE IS 2 INCHES AT FULL SIZE (IF NOT 2"–SCALE ACCORDINGLY)

DESIGNED TLR
DRAWN TDC
REVIEWED TLR

SHEET NUMBER
14 OF 52

GRAVIX Precast Wall System (2019-10-28) REV.dwg
10/28/2019 12:04 PM

THIS SHEET PLOTS ON 22" x 34" ANSI D

© Copyright 2018 by Earth Wall Products, LLC. All rights reserved. This document is the property of Earth Wall Products, LLC. It is to be used only for the specific project referred to or identified herein and is not to be used on other projects, in whole or in part, except by the express written agreement of Earth Wall Products, LLC.

GRAVIX Precast Wall System (2019-10-28) REV.dwg
10/28/2019 12:04 PM

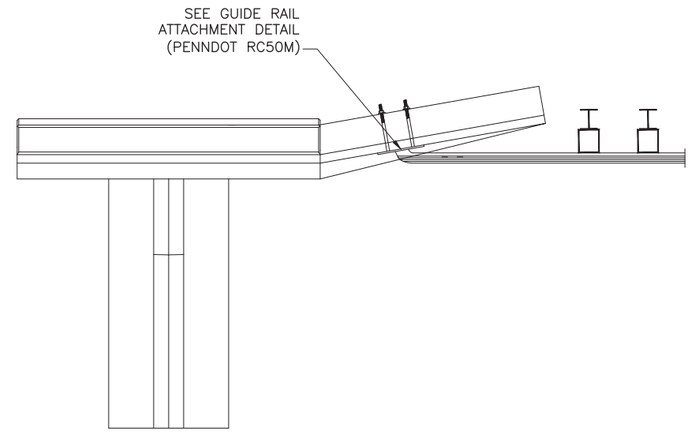

PLAN VIEW

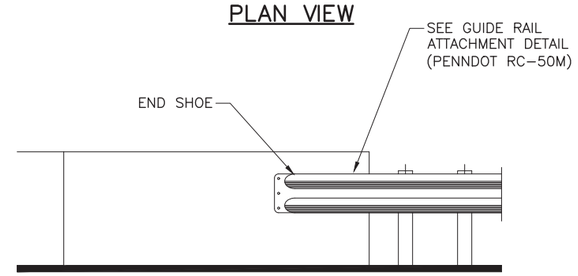

ELEVATION VIEW

GUIDE RAIL ATTACHMENT DETAIL

12/13/2019

REVISIONS

REV.	DESCRIPTION	BY	DATE
2	UPDATED PER REVIEW COMMENTS	TR	08/31/14
3	UPDATED PER REVIEW COMMENTS	TR	12/21/18
4	UPDATED PER REVIEW COMMENTS	TDC	7/9/19
5	UPDATED PER REVIEW COMMENTS	TDC	7/11/19
6	UPDATED PER REVIEW COMMENTS	TDC	9/27/19
7	UPDATED PER REVIEW COMMENTS	TDC	10/28/19

GRAVIX
PennDOT Precast Wall System
GRAVIX IS A LICENSED PRODUCT OF EARTH WALL PRODUCTS, LLC

I CERTIFY THAT ALL ASSUMPTIONS MADE IN DESIGNING THIS WALL HAVE BEEN VALIDATED THROUGH CONSTRUCTION DETAILS, SPECIAL NOTES AND / OR INSTRUCTIONS TO THE FABRICATOR, ERECTOR AND CONTRACTOR. CERTIFIED WITH RESPECT TO BEARING, SLIDING, INTERNAL STABILITY AND OVERTURNING OF THE GRAVIX STRUCTURE ONLY.

COMMONWEALTH OF PENNSYLVANIA
REGISTERED PROFESSIONAL
LANCE G. LABADIE
ENGINEER
PE027410
PENNSYLVANIA
10/28/19

COMMONWEALTH OF PENNSYLVANIA
DEPARTMENT OF TRANSPORTATION

DRAWING NUMBER # 2016-296

GUIDE RAIL ATTACHMENT DETAIL

LINE IS 2 INCHES
AT FULL SIZE
(IF NOT 2"–SCALE ACCORDINGLY)

DESIGNED TLR
DRAWN TDC
REVIEWED TLR

SHEET NUMBER
15 OF 52

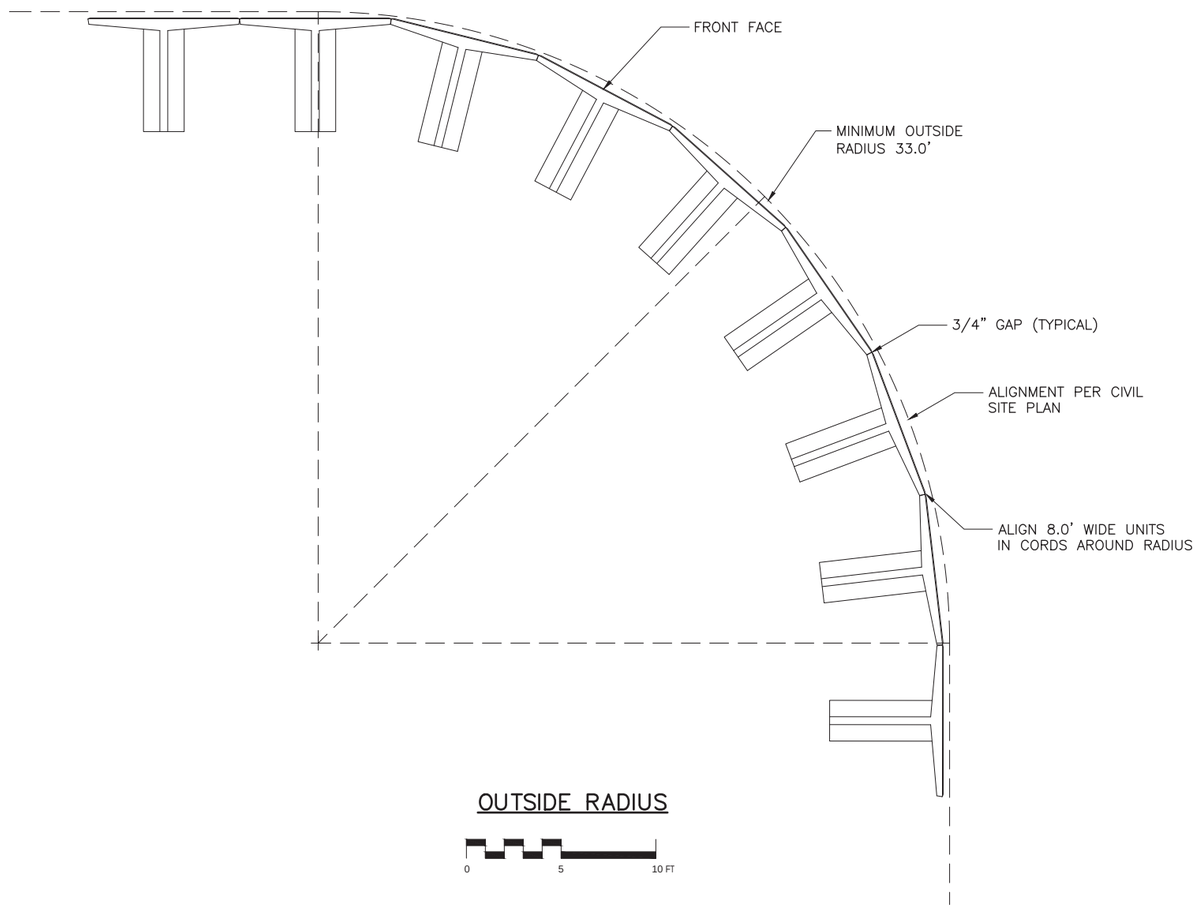

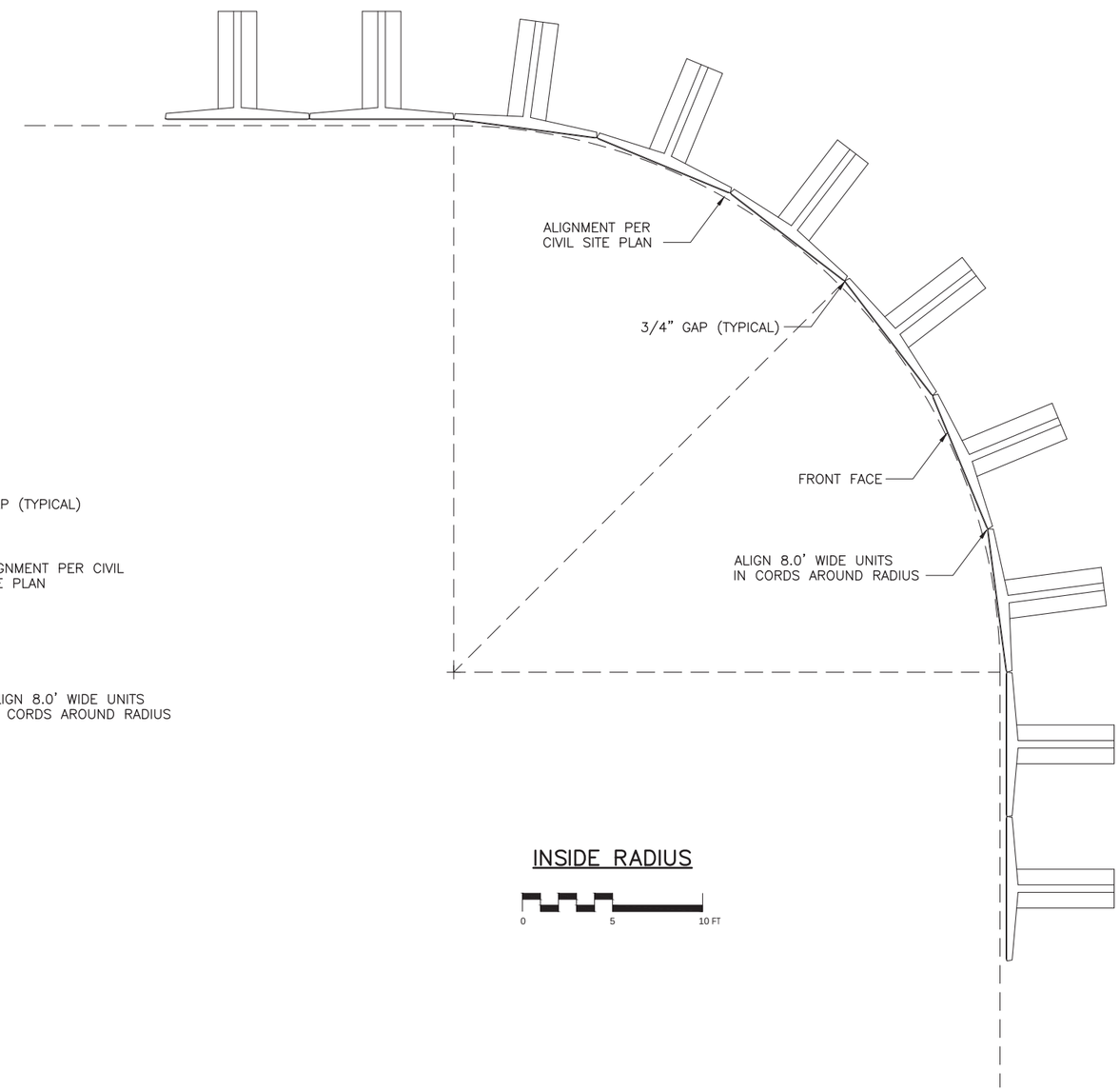

12/13/2019

REVISIONS			
REV.	DESCRIPTION	BY	DATE
2	UPDATED PER REVIEW COMMENTS	TR	08/31/14
3	UPDATED PER REVIEW COMMENTS	TR	12/21/18
4	UPDATED PER REVIEW COMMENTS	TDC	7/9/19
5	UPDATED PER REVIEW COMMENTS	TDC	7/11/19
6	UPDATED PER REVIEW COMMENTS	TDC	9/27/19
7	UPDATED PER REVIEW COMMENTS	TDC	10/28/19

GRAVIX

PennDOT Precast Wall System

GRAVIX IS A LICENSED PRODUCT OF EARTH WALL PRODUCTS, LLC

I CERTIFY THAT ALL ASSUMPTIONS MADE IN DESIGNING THIS WALL HAVE BEEN VALIDATED THROUGH CONSTRUCTION DETAILS, SPECIAL NOTES AND / OR INSTRUCTIONS TO THE FABRICATOR, ERECTOR AND CONTRACTOR. CERTIFIED WITH RESPECT TO BEARING, SLIDING, INTERNAL STABILITY AND OVERTURNING OF THE GRAVIX STRUCTURE ONLY.

COMMONWEALTH OF PENNSYLVANIA
REGISTERED PROFESSIONAL
LANCE G. ARVIDSON
ENGINEER
10/28/19

COMMONWEALTH OF PENNSYLVANIA
DEPARTMENT OF TRANSPORTATION

DRAWING NUMBER # 2016-296

DETAILS RADIUS

LINE IS 2 INCHES AT FULL SIZE (IF NOT 2"—SCALE ACCORDINGLY)

DESIGNED TLR
DRAWN TDC
REVIEWED TLR

SHEET NUMBER
16 OF 52

© Copyright 2018 by Earth Wall Products, LLC. All rights reserved. This document is the property of Earth Wall Products, LLC. It is to be used only for the specific project referred to or identified herein and is not to be used on other projects, in whole or in part, except by the express written agreement of Earth Wall Products, LLC.

THIS SHEET PLOTS ON 22" x 34" ANSI D

GRAVIX Precast Wall System (2019-10-28) REV.dwg
10/28/2019 12:04 PM

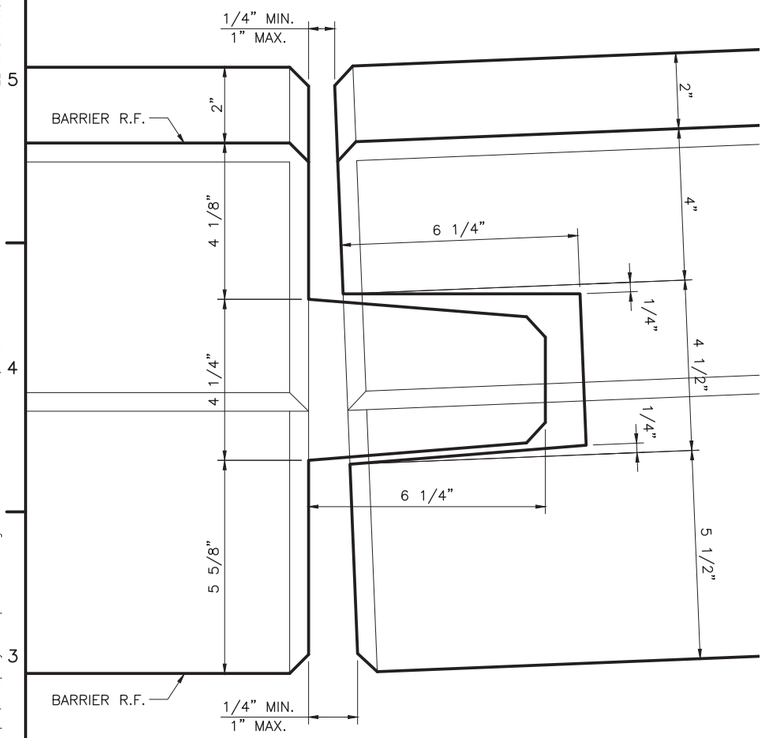

ENLARGED JOINT DETAIL

DEFLECTION	RADIUS
1 DEG.	461.95'
2 DEG.	230.98'

12/13/2019

REVISIONS			
REV.	DESCRIPTION	BY	DATE
2	UPDATED PER REVIEW COMMENTS	TR	08/31/14
3	UPDATED PER REVIEW COMMENTS	TR	12/21/18
4	UPDATED PER REVIEW COMMENTS	TDC	7/9/19
5	UPDATED PER REVIEW COMMENTS	TDC	7/11/19
6	UPDATED PER REVIEW COMMENTS	TDC	9/27/19
7	UPDATED PER REVIEW COMMENTS	TDC	10/28/19

GRAVIX

PennDOT Precast Wall System

GRAVIX IS A LICENSED PRODUCT OF EARTH WALL PRODUCTS, LLC

I CERTIFY THAT ALL ASSUMPTIONS MADE IN DESIGNING THIS WALL HAVE BEEN VALIDATED THROUGH CONSTRUCTION DETAILS, SPECIAL NOTES AND / OR INSTRUCTIONS TO THE FABRICATOR, ERECTOR AND CONTRACTOR. CERTIFIED WITH RESPECT TO BEARING, SLIDING, INTERNAL STABILITY AND OVERTURNING OF THE GRAVIX STRUCTURE ONLY.

COMMONWEALTH OF PENNSYLVANIA REGISTERED PROFESSIONAL LANCE G. FRASER ENGINEER PE-075419 PENNSYLVANIA 10/28/19

COMMONWEALTH OF PENNSYLVANIA
DEPARTMENT OF TRANSPORTATION

DRAWING NUMBER # 2016-296

DEFLECTION LIMITS

LINE IS 2 INCHES AT FULL SIZE (IF NOT 2"–SCALE ACCORDINGLY)

DESIGNED TLR
DRAWN TDC
REVIEWED TLR

SHEET NUMBER
17 OF 52

THIS SHEET PLOTS ON 22" x 34" ANSI D

© Copyright 2018 by Earth Wall Products, LLC. All rights reserved. This document is the property of Earth Wall Products, LLC. It is to be used only for the specific project referred to or identified herein and is not to be used on other projects, in whole or in part, except by the express written agreement of Earth Wall Products, LLC.

GRAVIX Precast Wall System (2019-10-28) REV.dwg
10/28/2019 12:05 PM

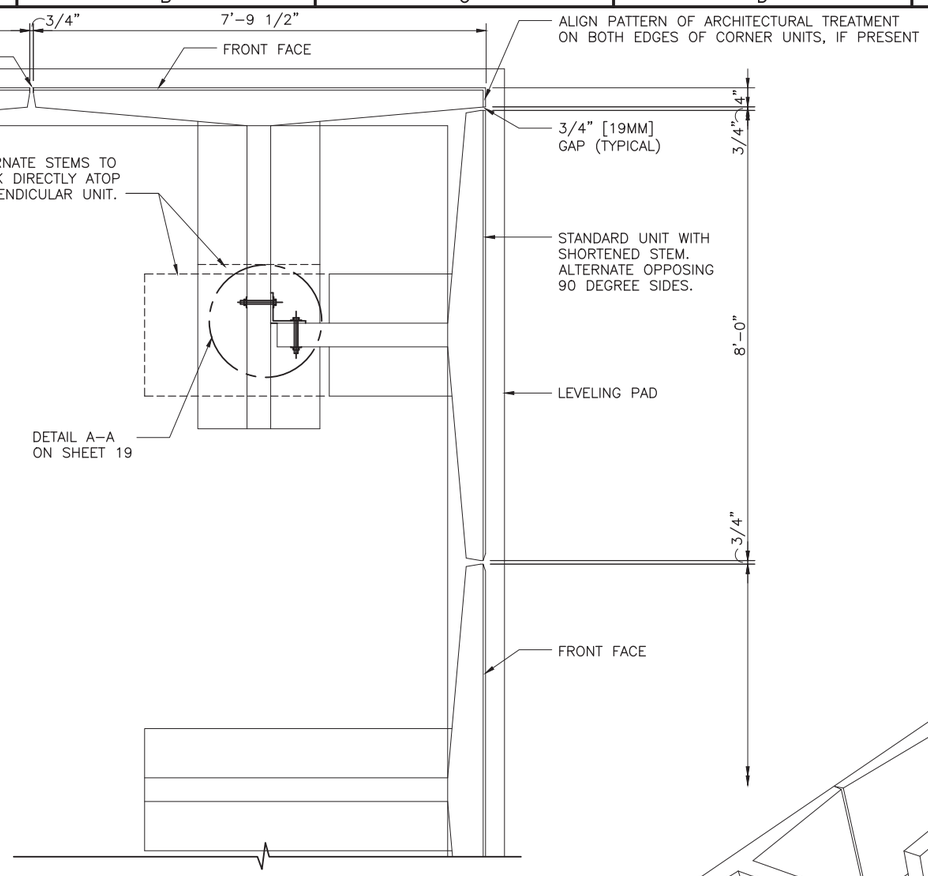

OUTSIDE 90° CORNER DETAIL

0 1 2 3 FT

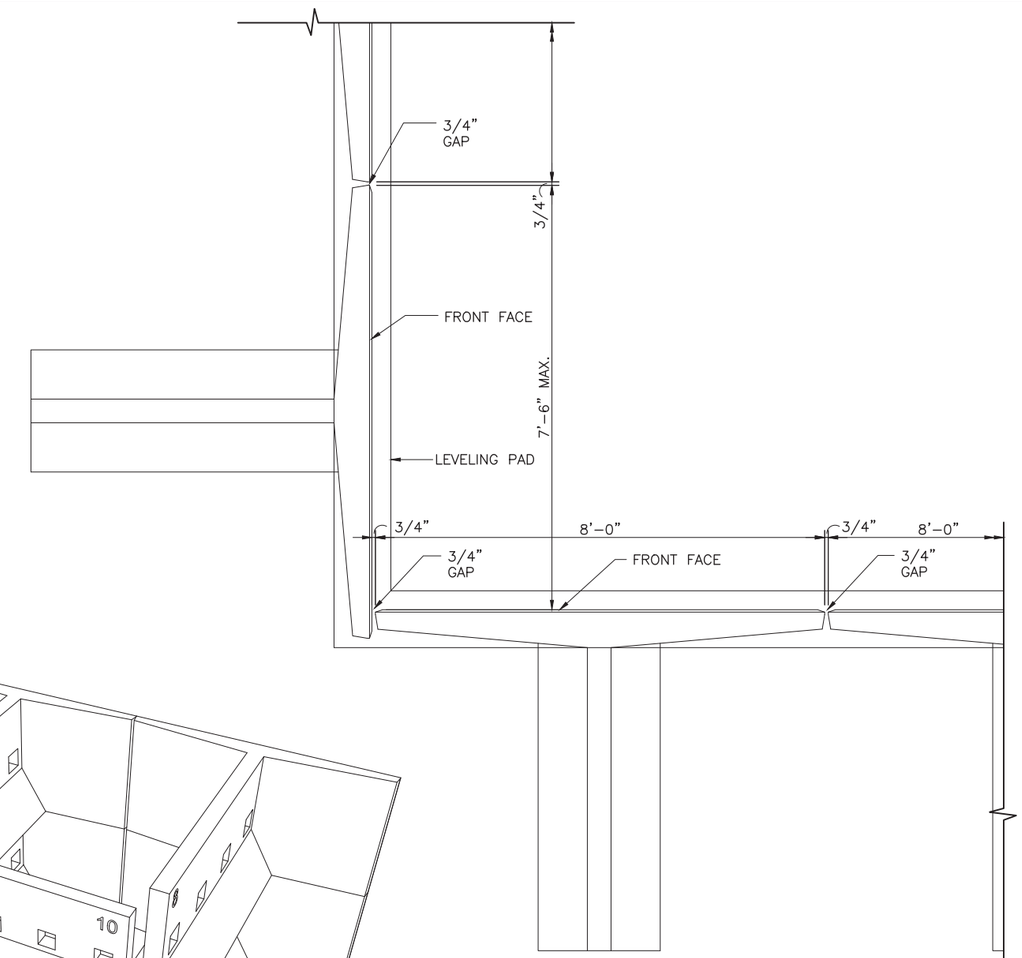

INSIDE 90° CORNER DETAIL

0 1 2 3 FT

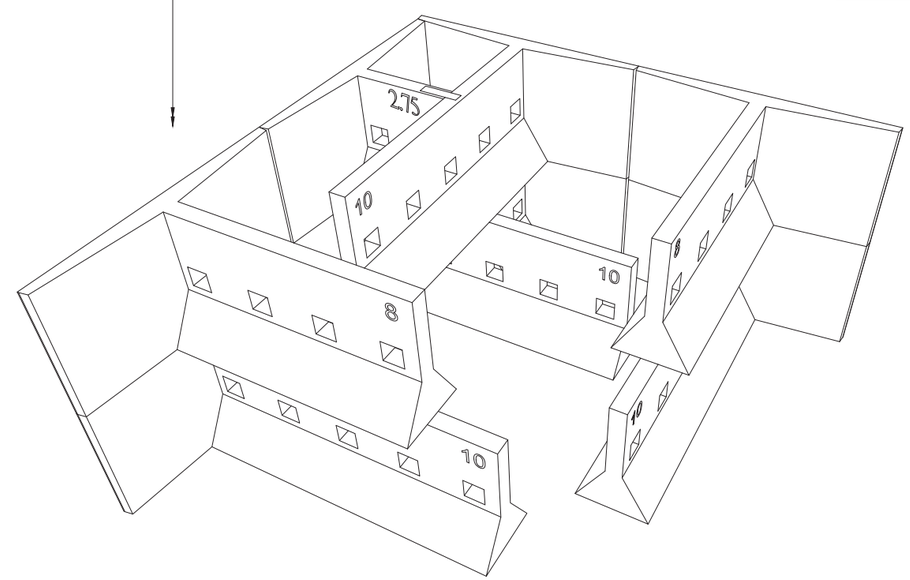

OUTSIDE 90° CORNER 3D ISOMETRIC

SCALE: NOT TO SCALE

12/13/2019

© Copyright 2018 by Earth Wall Products, LLC. All rights reserved. This document is the property of Earth Wall Products, LLC. It is to be used only for the specific project referred to or identified herein and is not to be used on other projects, in whole or in part, except by the express written agreement of Earth Wall Products, LLC.

THIS SHEET PLOTS ON 22" x 34" ANSI D

GRAVIX Precast Wall System (2019-10-28) REV.dwg
10/28/2019 12:05 PM

REVISIONS

REV.	DESCRIPTION	BY	DATE
2	UPDATED PER REVIEW COMMENTS	TR	08/31/14
3	UPDATED PER REVIEW COMMENTS	TR	12/21/18
4	UPDATED PER REVIEW COMMENTS	TDC	7/9/19
5	UPDATED PER REVIEW COMMENTS	TDC	7/11/19
6	UPDATED PER REVIEW COMMENTS	TDC	9/27/19
7	UPDATED PER REVIEW COMMENTS	TDC	10/28/19

GRAVIX

PennDOT Precast Wall System

GRAVIX IS A LICENSED PRODUCT OF EARTH WALL PRODUCTS, LLC

I CERTIFY THAT ALL ASSUMPTIONS MADE IN DESIGNING THIS WALL HAVE BEEN VALIDATED THROUGH CONSTRUCTION DETAILS, SPECIAL NOTES AND / OR INSTRUCTIONS TO THE FABRICATOR, ERECTOR AND CONTRACTOR. CERTIFIED WITH RESPECT TO BEARING, SLIDING, INTERNAL STABILITY AND OVERTURNING OF THE GRAVIX STRUCTURE ONLY.

COMMONWEALTH OF PENNSYLVANIA REGISTERED PROFESSIONAL LANCE G. FARVASS ENGINEER PE037410 10/28/19

COMMONWEALTH OF PENNSYLVANIA
DEPARTMENT OF TRANSPORTATION

DRAWING NUMBER # 2016-296

DETAILS 90 DEGREE CORNER

LINE IS 2 INCHES AT FULL SIZE (IF NOT 2"-SCALE ACCORDINGLY)

DESIGNED TLR
DRAWN TDC
REVIEWED TLR

SHEET NUMBER
18 OF 52

THIS SHEET PLOTS ON 22" x 34" ANSI D

© Copyright 2018 by Earth Wall Products, LLC. All rights reserved. This document is the property of Earth Wall Products, LLC. It is to be used only for the specific project referred to or identified herein and is not to be used on other projects, in whole or in part, except by the express written agreement of Earth Wall Products, LLC.

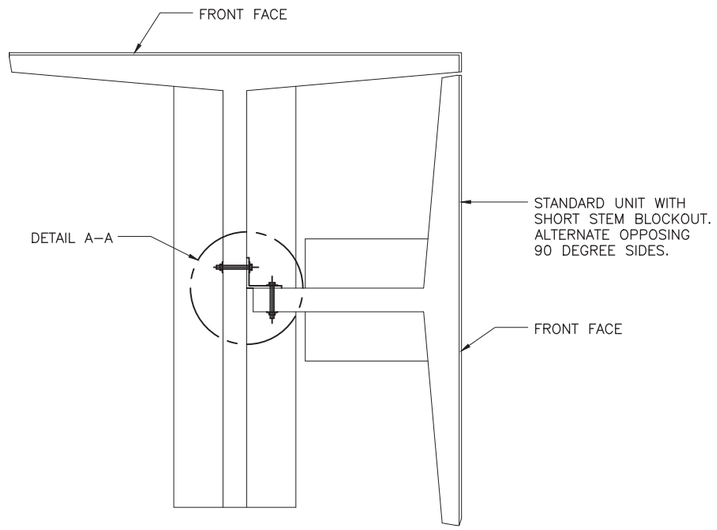

OUTSIDE 90° CORNER DETAIL

0 1 2 3 FT

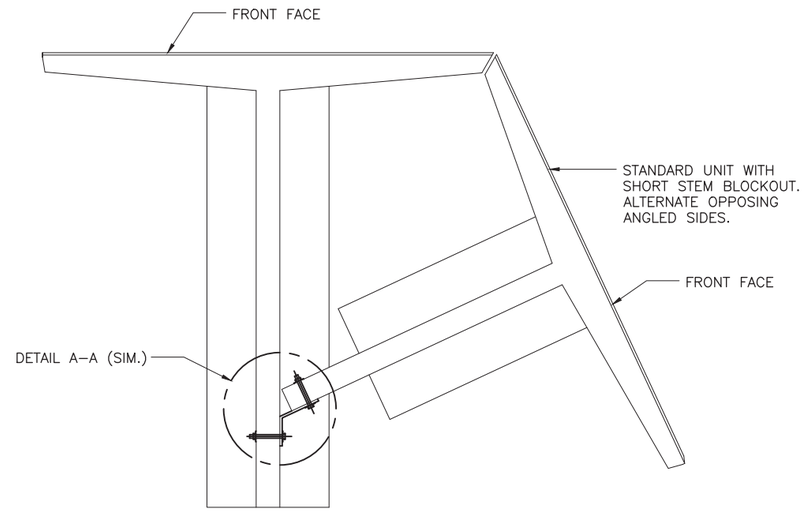

ANGLED CORNER DETAIL

0 1 2 3 FT

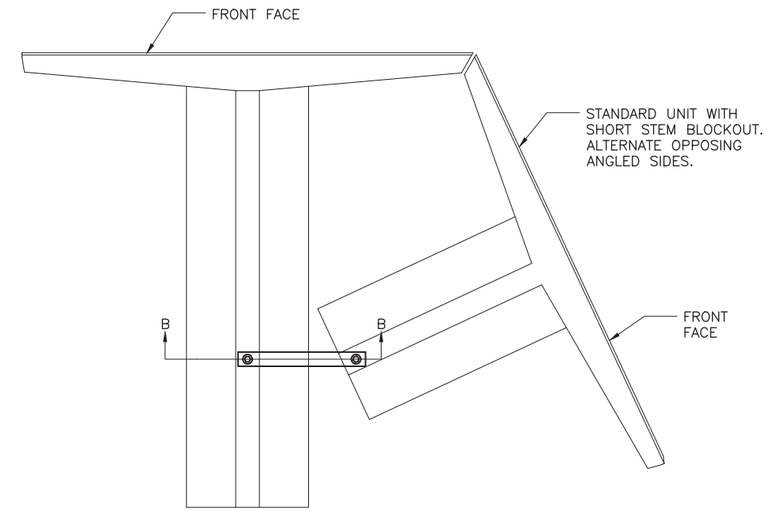

TOP UNIT CORNER DETAIL

0 1 2 3 FT

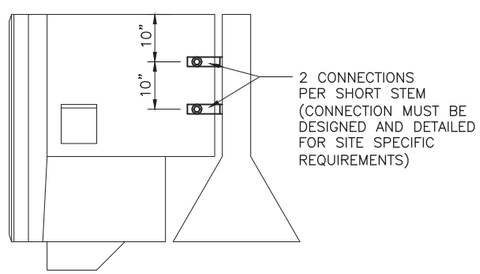

BOLTED CONNECTION DETAIL

0 1 2 3 FT

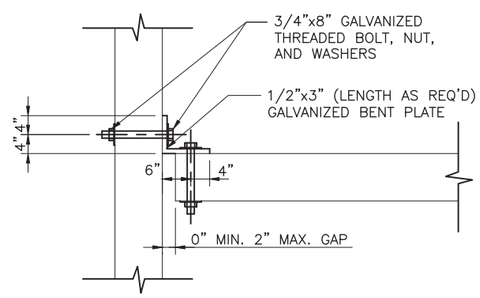

DETAIL A–A

SCALE: NO SCALE

NOTE:
ALL BOLT PLATES AND BOLTS TO BE GRADE 5 HEX, WITH 7/8" HOLES AND HOT DIPPED GALVANIZED MEETING ASTM A123.

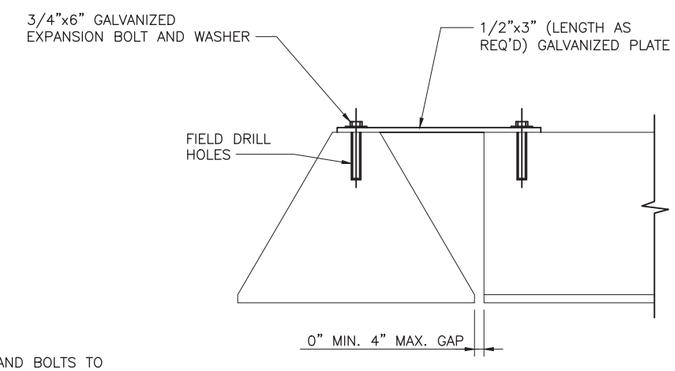

SECTION B–B

SCALE: NO SCALE

12/13/2019

REVISIONS			
REV.	DESCRIPTION	BY	DATE
2	UPDATED PER REVIEW COMMENTS	TR	08/31/14
3	UPDATED PER REVIEW COMMENTS	TR	12/21/18
4	UPDATED PER REVIEW COMMENTS	TDC	7/9/19
5	UPDATED PER REVIEW COMMENTS	TDC	7/11/19
6	UPDATED PER REVIEW COMMENTS	TDC	9/27/19
7	UPDATED PER REVIEW COMMENTS	TDC	10/28/19

GRAVIX

PennDOT Precast Wall System

GRAVIX IS A LICENSED PRODUCT OF EARTH WALL PRODUCTS, LLC

I CERTIFY THAT ALL ASSUMPTIONS MADE IN DESIGNING THIS WALL HAVE BEEN VALIDATED THROUGH CONSTRUCTION DETAILS, SPECIAL NOTES AND / OR INSTRUCTIONS TO THE FABRICATOR, ERECTOR AND CONTRACTOR. CERTIFIED WITH RESPECT TO BEARING, SLIDING, INTERNAL STABILITY AND OVERTURNING OF THE GRAVIX STRUCTURE ONLY.

COMMONWEALTH OF PENNSYLVANIA
REGISTERED PROFESSIONAL
LANCE G. PARADISO
ENGINEER
PE037410
PENNSYLVANIA
10/28/19

COMMONWEALTH OF PENNSYLVANIA
DEPARTMENT OF TRANSPORTATION

DRAWING NUMBER # 2016-296

CORNER CONNECTION DETAILS

LINE IS 2 INCHES AT FULL SIZE (IF NOT 2"–SCALE ACCORDINGLY)

DESIGNED TLR
DRAWN TDC
REVIEWED TLR

SHEET NUMBER
19 OF 52

GRAVIX Precast Wall System (2019-10-28) REV.dwg
10/28/2019 12:05 PM

THIS SHEET PLOTS ON 22" x 34" ANSI D

© Copyright 2018 by Earth Wall Products, LLC. All rights reserved. This document is the property of Earth Wall Products, LLC. It is to be used only for the specific project referred to or identified herein and is not to be used on other projects, in whole or in part, except by the express written agreement of Earth Wall Products, LLC.

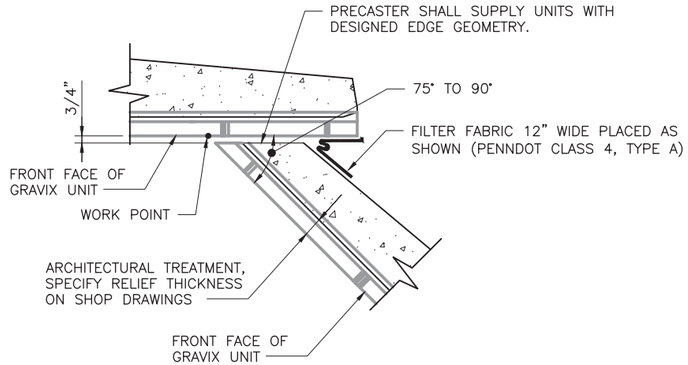

OBTUSE INSIDE CORNER DETAIL

0 6" 1 2 FT

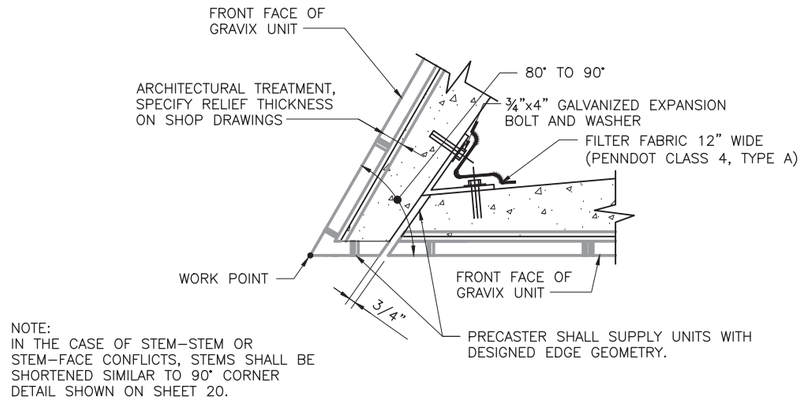

NOTE:
IN THE CASE OF STEM–STEM OR STEM–FACE CONFLICTS, STEMS SHALL BE SHORTENED SIMILAR TO 90° CORNER DETAIL SHOWN ON SHEET 20.

ACUTE OUTSIDE CORNER DETAIL

0 6" 1 2 FT

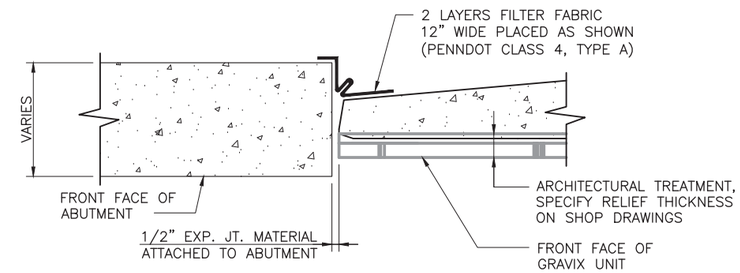

ABUTMENT DETAIL

0 6" 1 2 FT

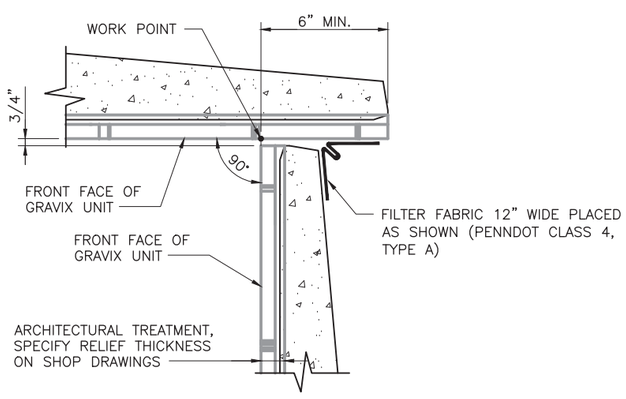

ORTHOGONAL INSIDE CORNER DETAIL

0 6" 1 2 FT

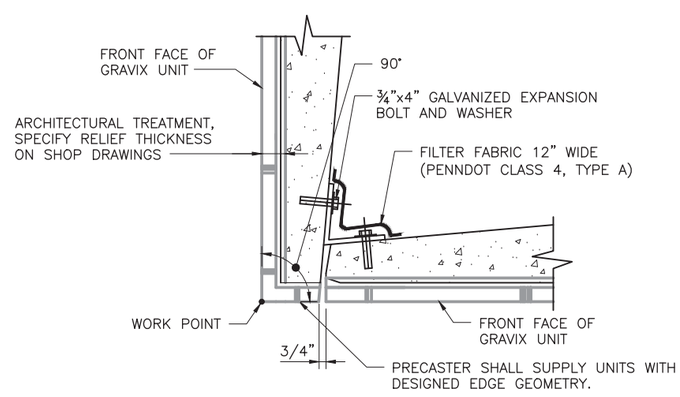

ORTHOGONAL OUTSIDE CORNER DETAIL

0 6" 1 2 FT

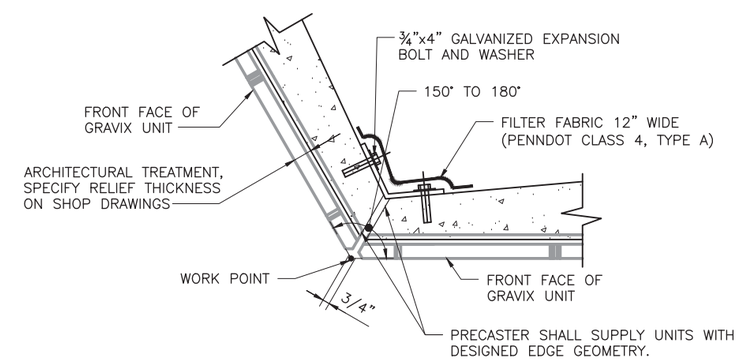

OBTUSE OUTSIDE CORNER DETAIL

0 6" 1 2 FT

12/13/2019

REVISIONS			
REV.	DESCRIPTION	BY	DATE
2	UPDATED PER REVIEW COMMENTS	TR	08/31/14
3	UPDATED PER REVIEW COMMENTS	TR	12/21/18
4	UPDATED PER REVIEW COMMENTS	TDC	7/9/19
5	UPDATED PER REVIEW COMMENTS	TDC	7/11/19
6	UPDATED PER REVIEW COMMENTS	TDC	9/27/19
7	UPDATED PER REVIEW COMMENTS	TDC	10/28/19

GRAVIX
PennDOT Precast Wall System
GRAVIX IS A LICENSED PRODUCT OF EARTH WALL PRODUCTS, LLC

I CERTIFY THAT ALL ASSUMPTIONS MADE IN DESIGNING THIS WALL HAVE BEEN VALIDATED THROUGH CONSTRUCTION DETAILS, SPECIAL NOTES AND / OR INSTRUCTIONS TO THE FABRICATOR, ERECTOR AND CONTRACTOR. CERTIFIED WITH RESPECT TO BEARING, SLIDING, INTERNAL STABILITY AND OVERTURNING OF THE GRAVIX STRUCTURE ONLY.

COMMONWEALTH OF PENNSYLVANIA REGISTERED PROFESSIONAL LANCE G. PARADISO ENGINEER PE072410 10/28/19

COMMONWEALTH OF PENNSYLVANIA
DEPARTMENT OF TRANSPORTATION

DRAWING NUMBER # 2016-296

ADDITIONAL DETAILS

LINE IS 2 INCHES AT FULL SIZE (IF NOT 2"–SCALE ACCORDINGLY)

DESIGNED TLR
DRAWN TDC
REVIEWED TLR

SHEET NUMBER
20 OF 52

GRAVIX Precast Wall System (2019-10-28) REV.dwg
10/28/2019 12:05 PM

THIS SHEET PLOTS ON 22" x 34" ANSI D

© Copyright 2018 by Earth Wall Products, LLC. All rights reserved. This document is the property of Earth Wall Products, LLC. It is to be used only for the specific project referred to or identified herein and is not to be used on other projects, in whole or in part, except by the express written agreement of Earth Wall Products, LLC.

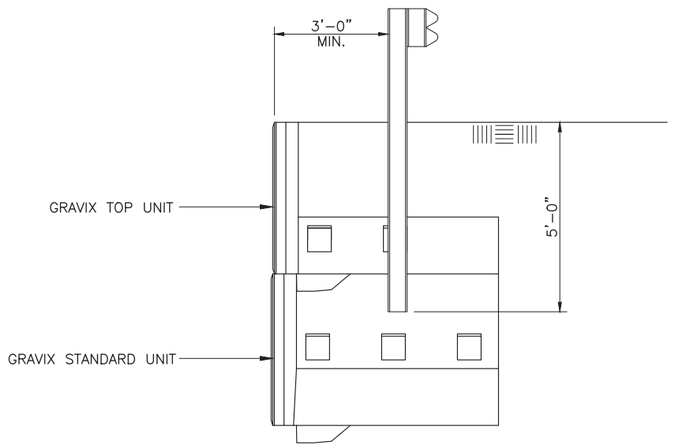

GUIDE RAIL POST CROSS SECTION

SCALE: N.T.S.

NOTE:
GUIDE RAIL POSTS TO BE COORDINATED BY WALL DESIGNER TO AVOID STEM INTERFERENCE.
OFFSET / CLEARANCE = 4" MIN.

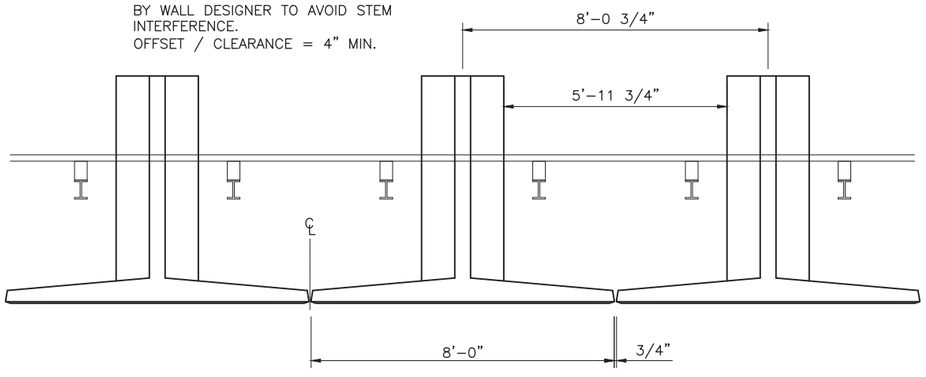

PLAN VIEW
GUIDE RAIL POST DETAIL

SCALE: N.T.S.

NOTE:
WALL DESIGNER TO COORDINATE LOCATION OF VERTICAL OBSTRUCTIONS WITH STEM LOCATIONS. MINIMUM OFFSET/CLEARANCE = 6"

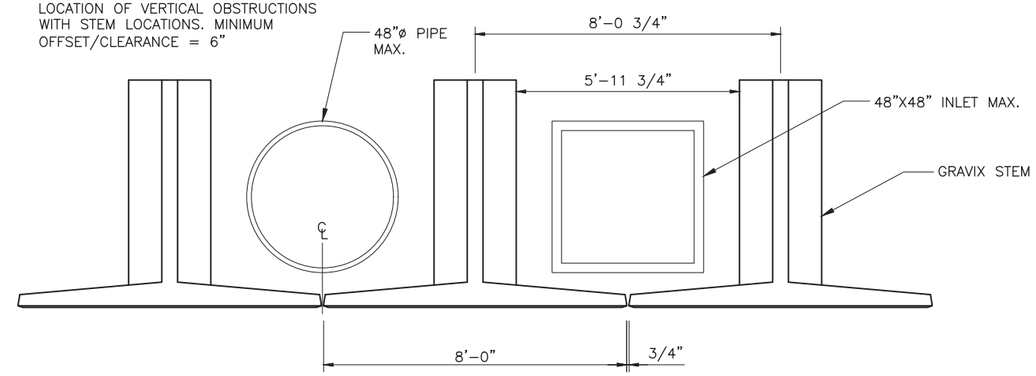

LARGE VERTICAL OBSTRUCTION DETAIL

SCALE: N.T.S.

NOTE:
WALL DESIGNER TO COORDINATE UNIT STEM LENGTHS WITH PIPE OBSTRUCTIONS.
OFFSET / CLEARANCE = 6" MIN.

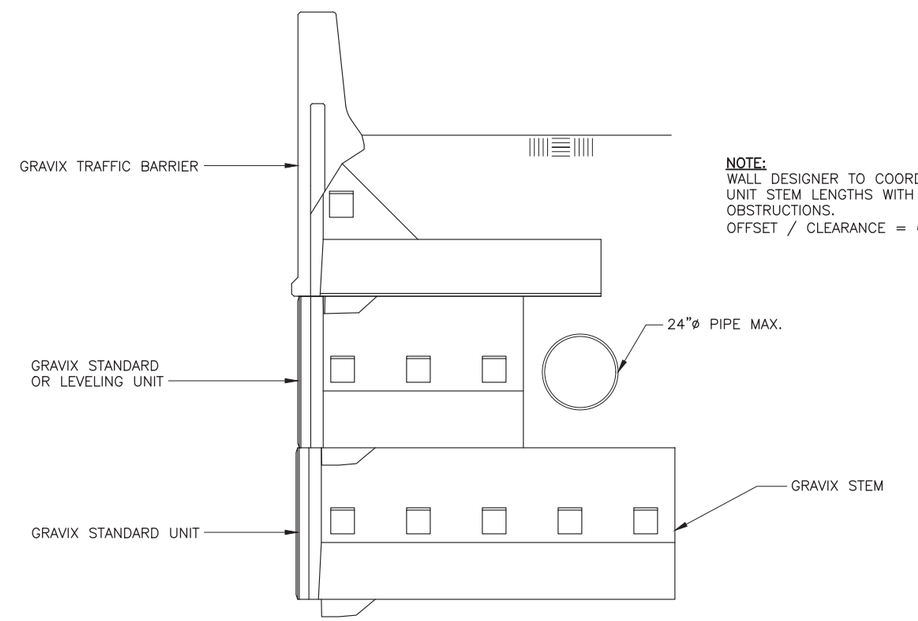

HORIZONTAL/PARALLEL OBSTRUCTION DETAIL

SCALE: N.T.S.

12/13/2019

REVISIONS

REV.	DESCRIPTION	BY	DATE
2	UPDATED PER REVIEW COMMENTS	TR	08/31/14
3	UPDATED PER REVIEW COMMENTS	TR	12/21/18
4	UPDATED PER REVIEW COMMENTS	TDC	7/9/19
5	UPDATED PER REVIEW COMMENTS	TDC	7/11/19
6	UPDATED PER REVIEW COMMENTS	TDC	9/27/19
7	UPDATED PER REVIEW COMMENTS	TDC	10/28/19

GRAVIX
PennDOT Precast Wall System
GRAVIX IS A LICENSED PRODUCT OF EARTH WALL PRODUCTS, LLC

I CERTIFY THAT ALL ASSUMPTIONS MADE IN DESIGNING THIS WALL HAVE BEEN VALIDATED THROUGH CONSTRUCTION DETAILS, SPECIAL NOTES AND / OR INSTRUCTIONS TO THE FABRICATOR, ERECTOR AND CONTRACTOR. CERTIFIED WITH RESPECT TO BEARING, SLIDING, INTERNAL STABILITY AND OVERTURNING OF THE GRAVIX STRUCTURE ONLY.

COMMONWEALTH OF PENNSYLVANIA
REGISTERED PROFESSIONAL
LANCE G. FRAVEL
10/28/19

COMMONWEALTH OF PENNSYLVANIA
DEPARTMENT OF TRANSPORTATION

DRAWING NUMBER # 2016-296

MISCELLANEOUS OBSTRUCTION DETAILS - 1

LINE IS 2 INCHES AT FULL SIZE (IF NOT 2"–SCALE ACCORDINGLY)

DESIGNED TLR
DRAWN TDC
REVIEWED TLR

SHEET NUMBER
21 OF 52

GRAVIX Precast Wall System (2019-10-28) REV.dwg
10/28/2019 12:05 PM

NOTE:
WALL DESIGNER TO COORDINATE AND DETAIL BLOCK OUTS REQUIRED AS WELL AS STEM LENGTH ADJUSTMENTS FOR HORIZONTAL OBSTRUCTIONS.

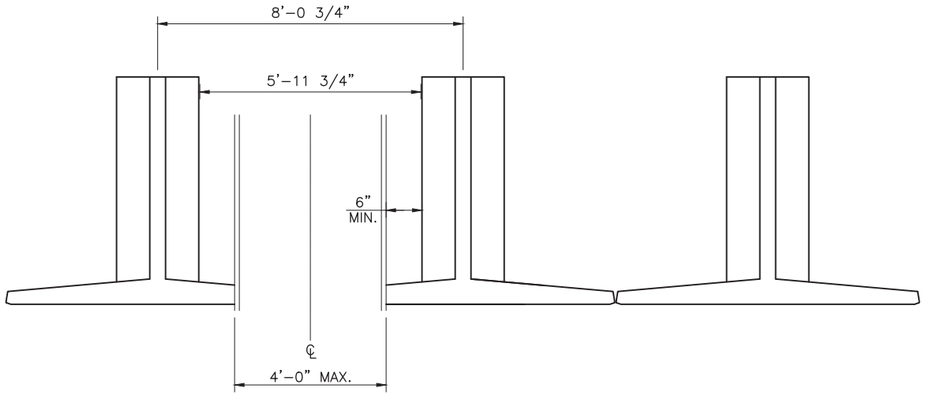

HORIZONTAL OBSTRUCTION PLAN VIEW

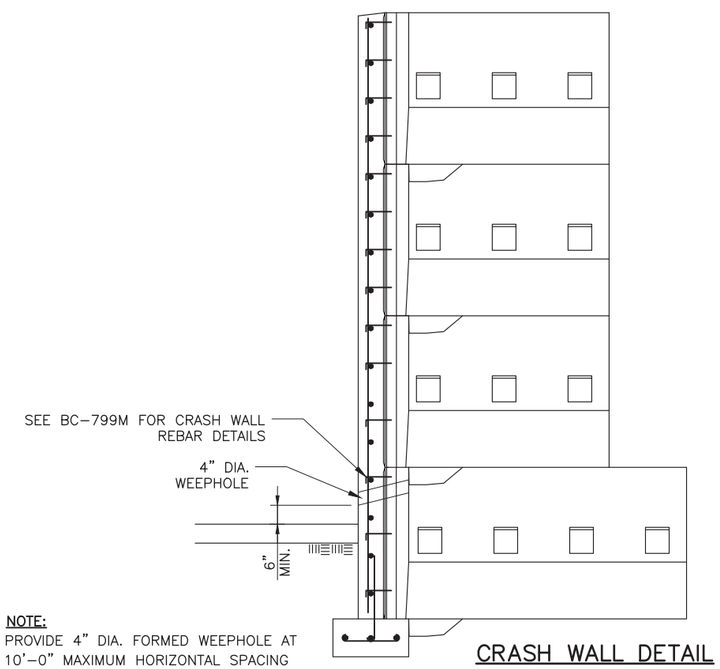

NOTE:
PROVIDE 4" DIA. FORMED WEEPHOLE AT 10'-0" MAXIMUM HORIZONTAL SPACING THROUGH BOTH THE CRASH WALL AND GRAVIX FACE REFER TO BC-751M FOR ADDITIONAL DETAILS.

CRASH WALL DETAIL

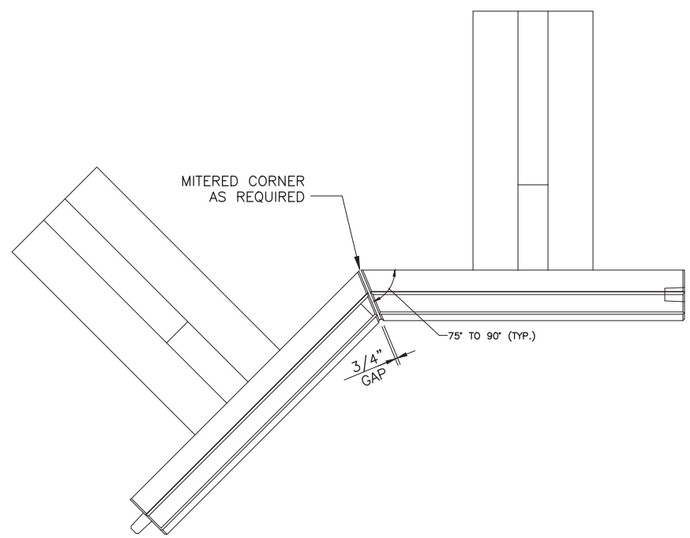

MITERED TURN WITH TRAFFIC BARRIER PLAN VIEW

12/13/2019

THIS SHEET PLOTS ON 22" x 34" ANSI D

© Copyright 2018 by Earth Wall Products, LLC. All rights reserved. This document is the property of Earth Wall Products, LLC. It is to be used only for the specific project referred to or identified herein and is not to be used on other projects, in whole or in part, except by the express written agreement of Earth Wall Products, LLC.

GRAVIX Precast Wall System (2019-10-28) REV.dwg
10/28/2019 12:05 PM

REVISIONS

REV.	DESCRIPTION	BY	DATE
2	UPDATED PER REVIEW COMMENTS	TR	08/31/14
3	UPDATED PER REVIEW COMMENTS	TR	12/21/18
4	UPDATED PER REVIEW COMMENTS	TDC	7/9/19
5	UPDATED PER REVIEW COMMENTS	TDC	7/11/19
6	UPDATED PER REVIEW COMMENTS	TDC	9/27/19
7	UPDATED PER REVIEW COMMENTS	TDC	10/28/19

GRAVIX
PennDOT Precast Wall System
GRAVIX IS A LICENSED PRODUCT OF EARTH WALL PRODUCTS, LLC

I CERTIFY THAT ALL ASSUMPTIONS MADE IN DESIGNING THIS WALL HAVE BEEN VALIDATED THROUGH CONSTRUCTION DETAILS, SPECIAL NOTES AND / OR INSTRUCTIONS TO THE FABRICATOR, ERECTOR AND CONTRACTOR. CERTIFIED WITH RESPECT TO BEARING, SLIDING, INTERNAL STABILITY AND OVERTURNING OF THE GRAVIX STRUCTURE ONLY.

COMMONWEALTH OF PENNSYLVANIA
DEPARTMENT OF TRANSPORTATION

DRAWING NUMBER # 2016-296

MISCELLANEOUS OBSTRUCTION DETAILS - 2

LINE IS 2 INCHES AT FULL SIZE (IF NOT 2"-SCALE ACCORDINGLY)

DESIGNED TLR
DRAWN TDC
REVIEWED TLR

SHEET NUMBER
22 OF 52

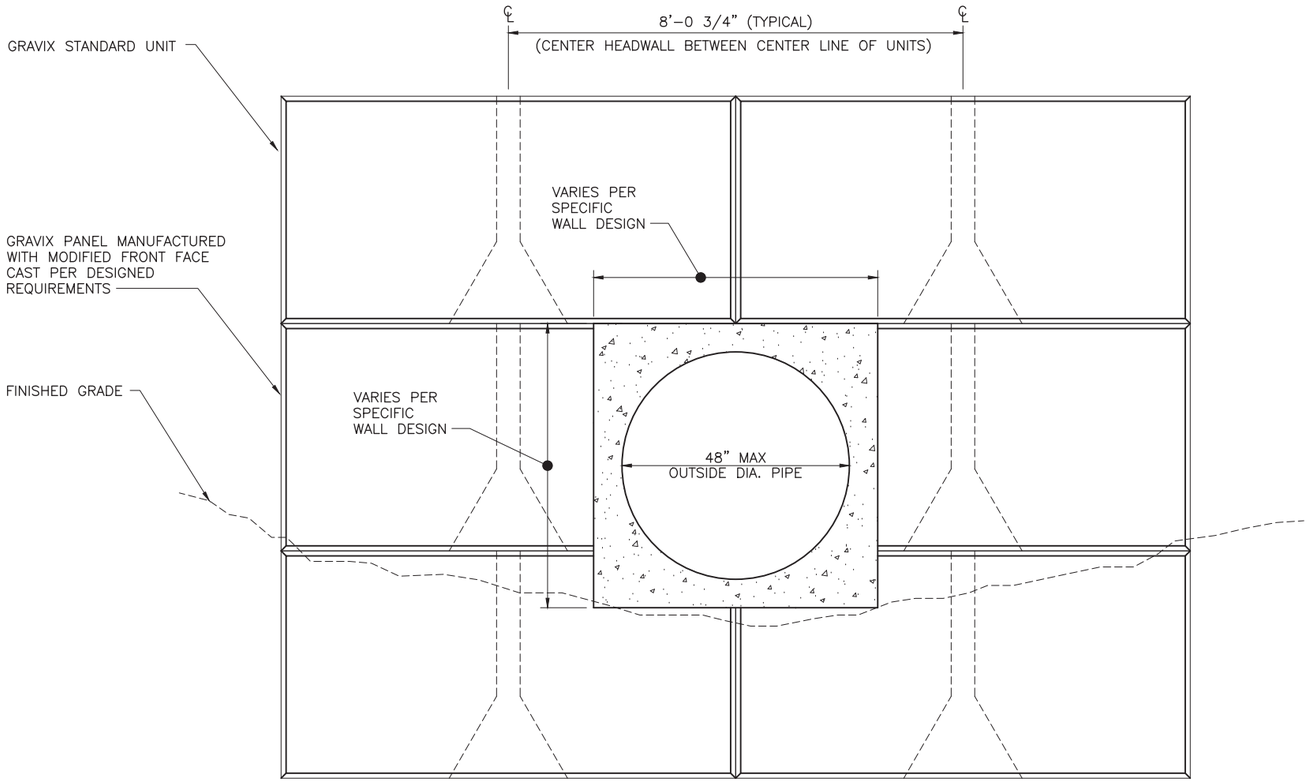

PRECAST OR CAST-IN-PLACE HEADWALL DETAIL

0 3 6 9 12 IN

NOTE:
DESIGN SHOWN IS FOR CONCEPT ONLY. ACTUAL PANEL DIMENSIONS AND REINFORCEMENT DESIGNED FOR PROJECT SPECIFIC CASE.

EPOXY COAT ALL HEADWALL REINFORCEMENT.

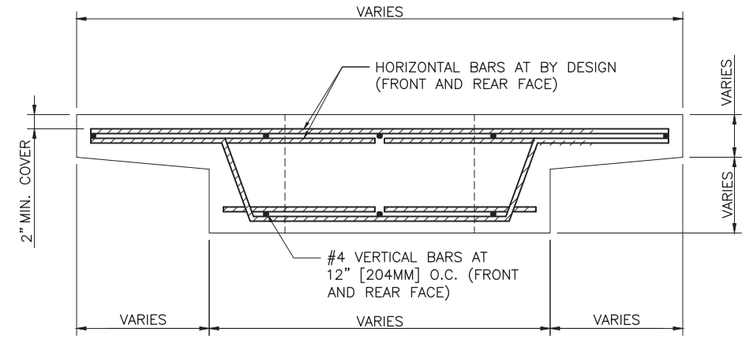

PLAN

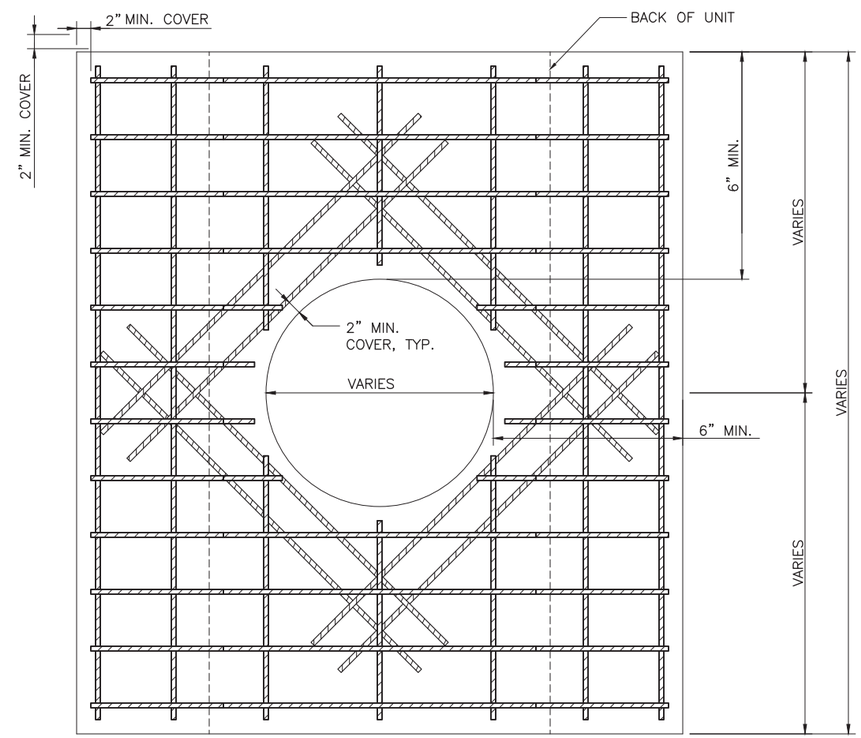

ELEVATION (FRONT VIEW) TYPICAL PRECAST OR CAST-IN-PLACE HEADWALL

0 6" 1 2 FT

12/13/2019

REVISIONS			
REV.	DESCRIPTION	BY	DATE
2	UPDATED PER REVIEW COMMENTS	TR	08/31/14
3	UPDATED PER REVIEW COMMENTS	TR	12/21/18
4	UPDATED PER REVIEW COMMENTS	TDC	7/9/19
5	UPDATED PER REVIEW COMMENTS	TDC	7/11/19
6	UPDATED PER REVIEW COMMENTS	TDC	9/27/19
7	UPDATED PER REVIEW COMMENTS	TDC	10/28/19

GRAVIX
PennDOT Precast Wall System
GRAVIX IS A LICENSED PRODUCT OF EARTH WALL PRODUCTS, LLC

I CERTIFY THAT ALL ASSUMPTIONS MADE IN DESIGNING THIS WALL HAVE BEEN VALIDATED THROUGH CONSTRUCTION DETAILS, SPECIAL NOTES AND / OR INSTRUCTIONS TO THE FABRICATOR, ERECTOR AND CONTRACTOR. CERTIFIED WITH RESPECT TO BEARING, SLIDING, INTERNAL STABILITY AND OVERTURNING OF THE GRAVIX STRUCTURE ONLY.

COMMONWEALTH OF PENNSYLVANIA
DEPARTMENT OF TRANSPORTATION

DRAWING NUMBER # 2016-296

DETAILS PIPE HEADWALL

LINE IS 2 INCHES AT FULL SIZE (IF NOT 2"–SCALE ACCORDINGLY)

DESIGNED TLR
DRAWN TDC
REVIEWED TLR

SHEET NUMBER
23 OF 52

THIS SHEET PLOTS ON 22" x 34" ANSI D

© Copyright 2018 by Earth Wall Products, LLC. All rights reserved. This document is the property of Earth Wall Products, LLC. It is to be used only for the specific project referred to or identified herein and is not to be used on other projects, in whole or in part, except by the express written agreement of Earth Wall Products, LLC.

GRAVIX Precast Wall System (2019-10-28) REV.dwg
10/28/2019 12:05 PM

THIS SHEET PLOTS ON 22" x 34" ANSI D

© Copyright 2018 by Earth Wall Products, LLC. All rights reserved. This document is the property of Earth Wall Products, LLC. It is to be used only for the specific project referred to or identified herein and is not to be used on other projects, in whole or in part, except by the express written agreement of Earth Wall Products, LLC.

GRAVIX Precast Wall System (2019-10-28) REV.dwg
10/28/2019 12:05 PM

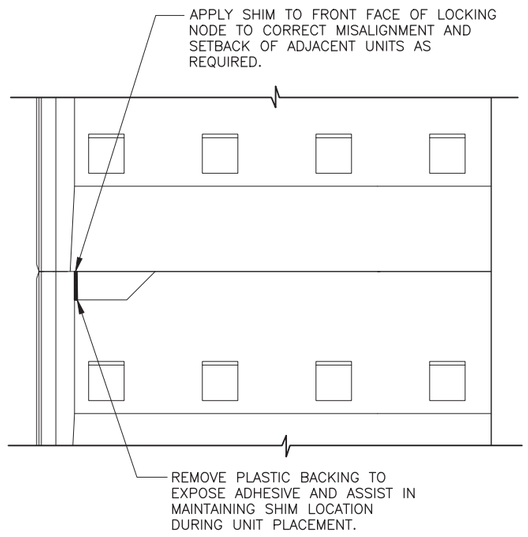

HORIZONTAL ALIGNMENT SHIMMING

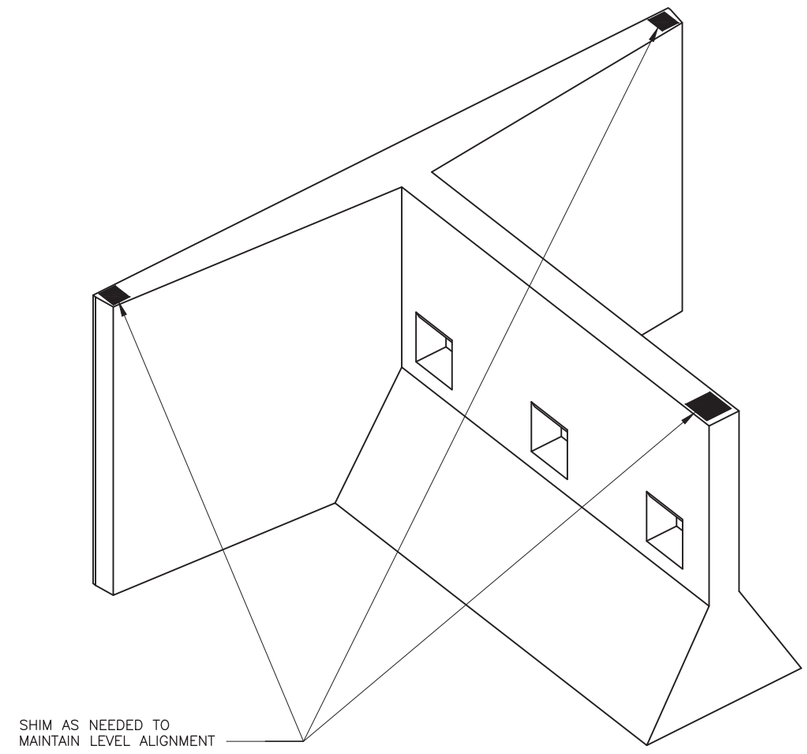

VERTICAL ALIGNMENT SHIMMING

SCALE: NOT TO SCALE

12/13/2019

REVISIONS

REV.	DESCRIPTION	BY	DATE
2	UPDATED PER REVIEW COMMENTS	TR	08/31/14
3	UPDATED PER REVIEW COMMENTS	TR	12/21/18
4	UPDATED PER REVIEW COMMENTS	TDC	7/9/19
5	UPDATED PER REVIEW COMMENTS	TDC	7/11/19
6	UPDATED PER REVIEW COMMENTS	TDC	9/27/19
7	UPDATED PER REVIEW COMMENTS	TDC	10/28/19

GRAVIX

PennDOT Precast Wall System

GRAVIX IS A LICENSED PRODUCT OF EARTH WALL PRODUCTS, LLC

I CERTIFY THAT ALL ASSUMPTIONS MADE IN DESIGNING THIS WALL HAVE BEEN VALIDATED THROUGH CONSTRUCTION DETAILS, SPECIAL NOTES AND / OR INSTRUCTIONS TO THE FABRICATOR, ERECTOR AND CONTRACTOR. CERTIFIED WITH RESPECT TO BEARING, SLIDING, INTERNAL STABILITY AND OVERTURNING OF THE GRAVIX STRUCTURE ONLY.

COMMONWEALTH OF PENNSYLVANIA
REGISTERED PROFESSIONAL
LANCE G. FRYSINGER
NO. 044144
10/28/19

COMMONWEALTH OF PENNSYLVANIA
DEPARTMENT OF TRANSPORTATION

DRAWING NUMBER # 2016-296

DETAILS ALIGNMENT SHIMMING

LINE IS 2 INCHES AT FULL SIZE
(IF NOT 2"–SCALE ACCORDINGLY)

DESIGNED TLR
DRAWN TDC
REVIEWED TLR

SHEET NUMBER
24 OF 52

GRAVIX STANDARD UNIT

LENGTH 6'–0"
VOLUME 35.10 FT³
DENSITY 140 LBS/FT³
WEIGHT 4,914 LBS

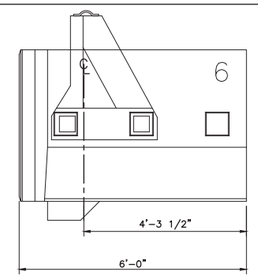

LENGTH 8'–0"
VOLUME 41.16 FT³
DENSITY 140 LBS/FT³
WEIGHT 5,762 LBS

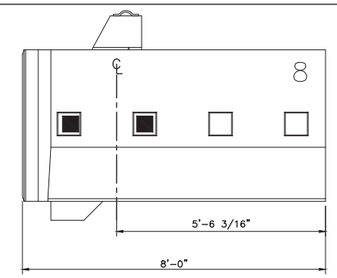

LENGTH 10'–0"
VOLUME 47.46 FT³
DENSITY 140 LBS/FT³
WEIGHT 6,645 LBS

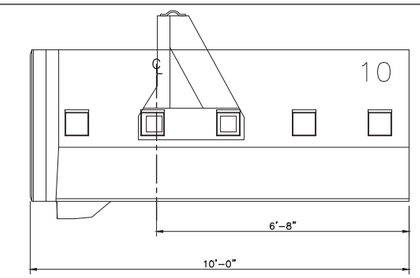

LENGTH 12'–0"
VOLUME 53.58 FT³
DENSITY 140 LBS/FT³
WEIGHT 7,501 LBS

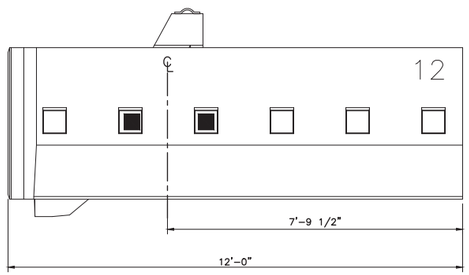

LENGTH 14'–0"
VOLUME 59.69 FT³
DENSITY 140 LBS/FT³
WEIGHT 8,358 LBS

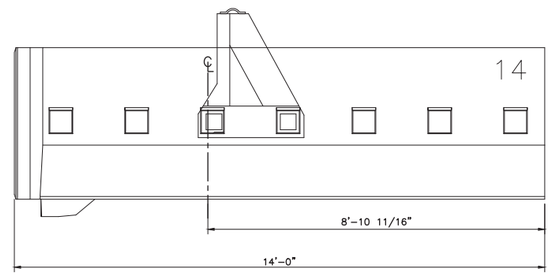

LENGTH 16'–0"
VOLUME 65.81 FT³
DENSITY 140 LBS/FT³
WEIGHT 9,214 LBS

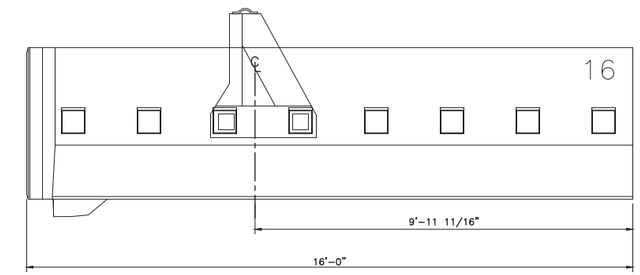

LENGTH 18'–0"
VOLUME 71.93 FT³
DENSITY 140 LBS/FT³
WEIGHT 10,070 LBS

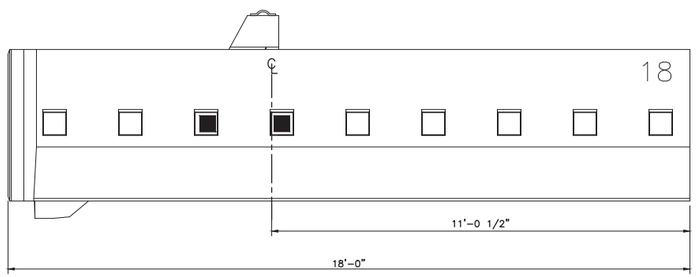

LENGTH 20'–0"
VOLUME 78.05 FT³
DENSITY 140 LBS/FT³
WEIGHT 10,927 LBS

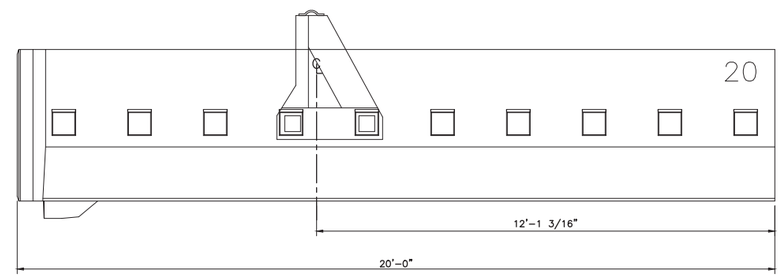

LENGTH 22'–0"
VOLUME 84.16 FT³
DENSITY 140 LBS/FT³
WEIGHT 11,783 LBS

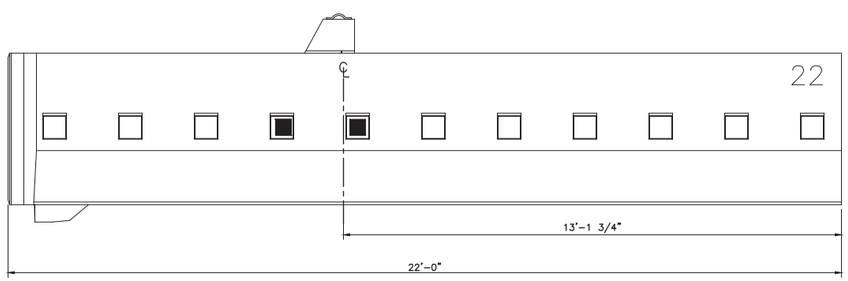

LENGTH 24'–0"
VOLUME 90.28 FT³
DENSITY 140 LBS/FT³
WEIGHT 12,640 LBS

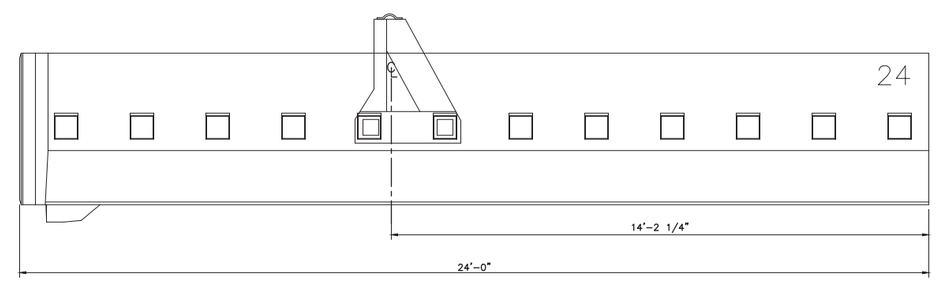

12/13/2019

THIS SHEET PLOTS ON 22" x 34" ANSI D

© Copyright 2018 by Earth Wall Products, LLC. All rights reserved. This document is the property of Earth Wall Products, LLC. It is to be used only for the specific project referred to or identified herein and is not to be used on other projects, in whole or in part, except by the express written agreement of Earth Wall Products, LLC.

GRAVIX Precast Wall System (2019-10-28) REV.dwg
10/28/2019 12:05 PM

REVISIONS

REV.	DESCRIPTION	BY	DATE
2	UPDATED PER REVIEW COMMENTS	TR	08/31/14
3	UPDATED PER REVIEW COMMENTS	TR	12/21/18
4	UPDATED PER REVIEW COMMENTS	TDC	7/9/19
5	UPDATED PER REVIEW COMMENTS	TDC	7/11/19
6	UPDATED PER REVIEW COMMENTS	TDC	9/27/19
7	UPDATED PER REVIEW COMMENTS	TDC	10/28/19

GRAVIX
PennDOT Precast Wall System
GRAVIX IS A LICENSED PRODUCT OF EARTH WALL PRODUCTS, LLC

I CERTIFY THAT ALL ASSUMPTIONS MADE IN DESIGNING THIS WALL HAVE BEEN VALIDATED THROUGH CONSTRUCTION DETAILS, SPECIAL NOTES AND / OR INSTRUCTIONS TO THE FABRICATOR, ERECTOR AND CONTRACTOR. CERTIFIED WITH RESPECT TO BEARING, SLIDING, INTERNAL STABILITY AND OVERTURNING OF THE GRAVIX STRUCTURE ONLY.

COMMONWEALTH OF PENNSYLVANIA
DEPARTMENT OF TRANSPORTATION

DRAWING NUMBER # 2016-296

CONSTRUCTION LIFTING DEVICE - 1

LINE IS 2 INCHES AT FULL SIZE (IF NOT 2"–SCALE ACCORDINGLY)

DESIGNED TLR
DRAWN TDC
REVIEWED TLR

SHEET NUMBER
25 OF 52

GRAVIX LEVELING UNIT

UNIT PROPERTIES ARE ONLY FOR THE EXAMPLE WALL HEIGHTS SHOWN. PROPERTIES FOR UNITS WITH DIFFERENT WALL HEIGHTS REQUIRE CALCULATION ON A CASE BY CASE BASIS.

HEIGHT 6'–0"
LENGTH 8'–0"
VOLUME 58.60 FT³
DENSITY 140 LBS/FT
WEIGHT 8,204 LBS

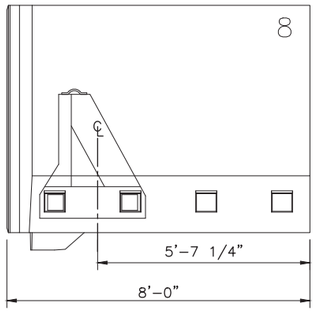

HEIGHT 4'–0"
LENGTH 8'–0"
VOLUME 42.58 FT³
DENSITY 140 LBS/FT
WEIGHT 5,962 LBS

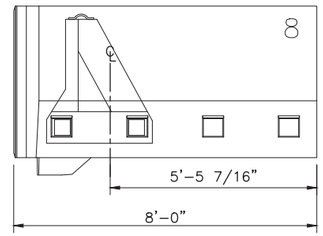

HEIGHT 2'–0"
LENGTH 8'–0"
VOLUME 25.87 FT³
DENSITY 140 LBS/FT
WEIGHT 3,621 LBS

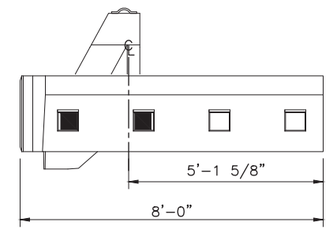

GRAVIX TRAFFIC BARRIER UNIT

LENGTH 8'–0"
VOLUME 83.30 FT³
DENSITY 140 LBS/FT
WEIGHT 11,662 LBS

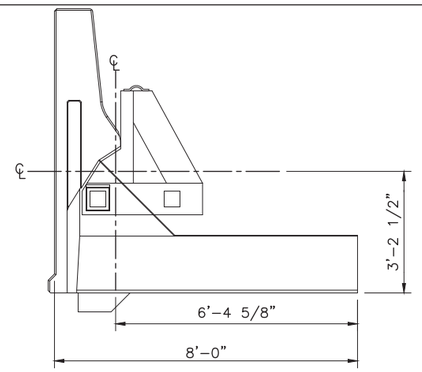

GRAVIX TOP UNIT

UNIT PROPERTIES ARE ONLY FOR THE EXAMPLE WALL HEIGHTS SHOWN. PROPERTIES FOR UNITS WITH DIFFERENT WALL HEIGHTS REQUIRE CALCULATION ON A CASE BY CASE BASIS.

HEIGHT 6'–0"
LENGTH 6'–0"
VOLUME 32.07 FT³
DENSITY 140 LBS/FT
WEIGHT 4,490 LBS

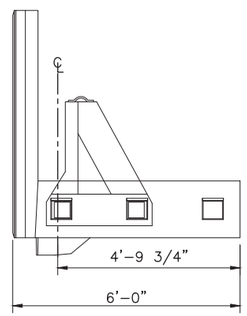

HEIGHT 4'–0"
LENGTH 6'–0"
VOLUME 25.99 FT³
DENSITY 140 LBS/FT
WEIGHT 3,639 LBS

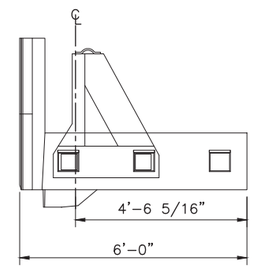

HEIGHT 2'–0"
LENGTH 6'–0"
VOLUME 19.43 FT³
DENSITY 140 LBS/FT
WEIGHT 2,720 LBS

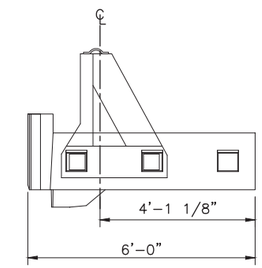

12/13/2019

REVISIONS

REV.	DESCRIPTION	BY	DATE
2	UPDATED PER REVIEW COMMENTS	TR	08/31/14
3	UPDATED PER REVIEW COMMENTS	TR	12/21/18
4	UPDATED PER REVIEW COMMENTS	TDC	7/9/19
5	UPDATED PER REVIEW COMMENTS	TDC	7/11/19
6	UPDATED PER REVIEW COMMENTS	TDC	9/27/19
7	UPDATED PER REVIEW COMMENTS	TDC	10/28/19

GRAVIX
PennDOT Precast Wall System
GRAVIX IS A LICENSED PRODUCT OF EARTH WALL PRODUCTS, LLC

I CERTIFY THAT ALL ASSUMPTIONS MADE IN DESIGNING THIS WALL HAVE BEEN VALIDATED THROUGH CONSTRUCTION DETAILS, SPECIAL NOTES AND / OR INSTRUCTIONS TO THE FABRICATOR, ERECTOR AND CONTRACTOR. CERTIFIED WITH RESPECT TO BEARING, SLIDING, INTERNAL STABILITY AND OVERTURNING OF THE GRAVIX STRUCTURE ONLY.

COMMONWEALTH OF PENNSYLVANIA
REGISTERED PROFESSIONAL ENGINEER
LANCE G. PARADISO
PE-072410
10/28/19

COMMONWEALTH OF PENNSYLVANIA
DEPARTMENT OF TRANSPORTATION

DRAWING NUMBER # 2016-296

CONSTRUCTION LIFTING DEVICE - 2

LINE IS 2 INCHES AT FULL SIZE (IF NOT 2"–SCALE ACCORDINGLY)

DESIGNED TLR
DRAWN TDC
REVIEWED TLR

SHEET NUMBER
26 OF 52

THIS SHEET PLOTS ON 22" x 34" ANSI D

© Copyright 2018 by Earth Wall Products, LLC. All rights reserved. This document is the property of Earth Wall Products, LLC. It is to be used only for the specific project referred to or identified herein and is not to be used on other projects, in whole or in part, except by the express written agreement of Earth Wall Products, LLC.

GRAVIX Precast Wall System (2019-10-28) REV.dwg
10/28/2019 12:05 PM

THIS SHEET PLOTS ON 22" x 34" ANSI D

© Copyright 2018 by Earth Wall Products, LLC. All rights reserved. This document is the property of Earth Wall Products, LLC. It is to be used only for the specific project referred to or identified herein and is not to be used on other projects, in whole or in part, except by the express written agreement of Earth Wall Products, LLC.

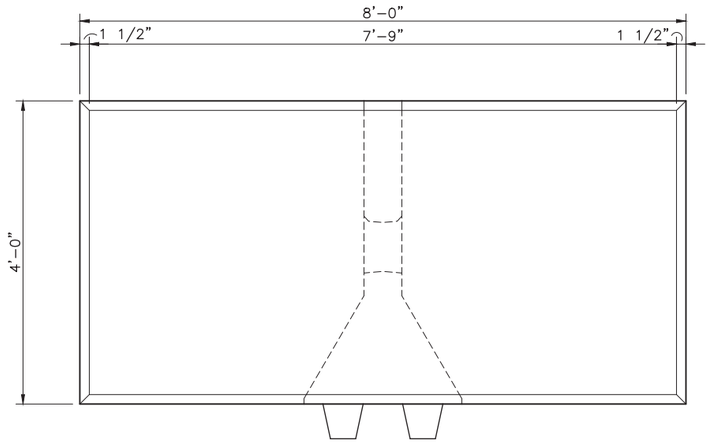

FRONT VIEW

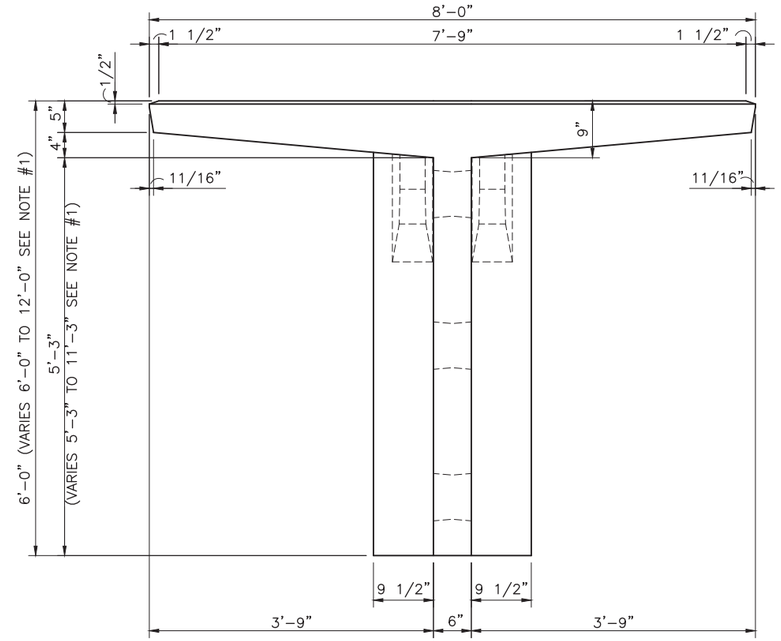

TOP VIEW

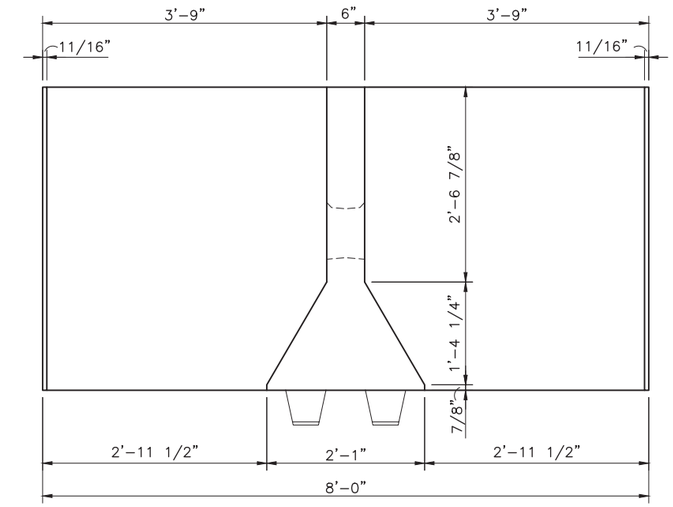

REAR VIEW

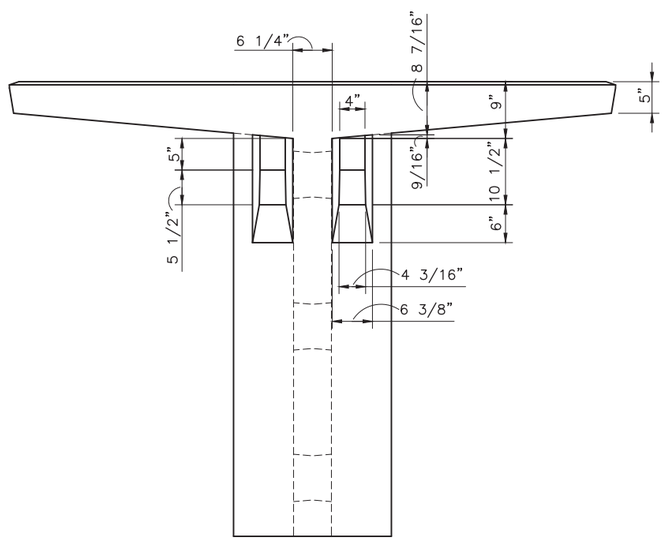

BOTTOM VIEW

NOTES:

1) THE VIEWS ARE DRAWN FOR A 6FT. STEM UNIT. ADJUST STEM IN 2 FT. INCREMENTS FOR 8, 10, AND 12 FT. STEMS ACCORDINGLY.

2) THESE UNITS SHALL NOT BE USED BELOW 24' FROM TOP OF WALL.

3) ADD 1 LIFTING BLOCKOUT AT 2'-0" SPACING FOR EACH 2'-0" EXTENSION OF THE STEM.

4) STEMS LESS THAN 6'-0" MAY BE USED WHERE LONGER STEMS CONFLICT WITH THE STEMS OF OTHER UNITS. IN ALL CASES, UNITS WITH STEM LESS THAN 6'-0" MUST BE MECHANICALLY CONNECTED TO THE FULL STEM UNIT THEY INTERSECT. THE DETAILS ON THIS SHEET MAY BE USED AS A GUIDELINE FOR THE DETAILING OF THE SPECIAL UNIT WITH STEMS LESS THAN 6'-0".

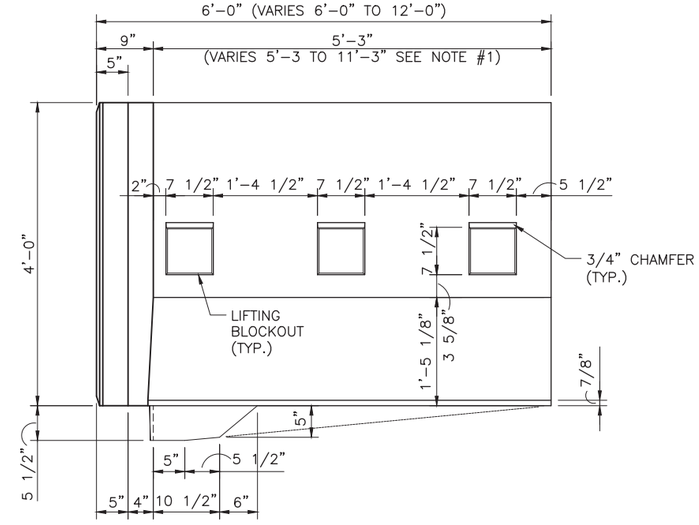

SIDE VIEW

12/13/2019

REVISIONS

REV.	DESCRIPTION	BY	DATE
2	UPDATED PER REVIEW COMMENTS	TR	08/31/14
3	UPDATED PER REVIEW COMMENTS	TR	12/21/18
4	UPDATED PER REVIEW COMMENTS	TDC	7/9/19
5	UPDATED PER REVIEW COMMENTS	TDC	7/11/19
6	UPDATED PER REVIEW COMMENTS	TDC	9/27/19
7	UPDATED PER REVIEW COMMENTS	TDC	10/28/19

GRAVIX

PennDOT Precast Wall System

GRAVIX IS A LICENSED PRODUCT OF EARTH WALL PRODUCTS, LLC

I CERTIFY THAT ALL ASSUMPTIONS MADE IN DESIGNING THIS WALL HAVE BEEN VALIDATED THROUGH CONSTRUCTION DETAILS, SPECIAL NOTES AND / OR INSTRUCTIONS TO THE FABRICATOR, ERECTOR AND CONTRACTOR. CERTIFIED WITH RESPECT TO BEARING, SLIDING, INTERNAL STABILITY AND OVERTURNING OF THE GRAVIX STRUCTURE ONLY.

COMMONWEALTH OF PENNSYLVANIA REGISTERED PROFESSIONAL LANCE G. FRAVATOR ENGINEER PE075410 PENNSYLVANIA 10/28/19

COMMONWEALTH OF PENNSYLVANIA
DEPARTMENT OF TRANSPORTATION

DRAWING NUMBER # 2016-296

STANDARD UNIT
(6 TO 12 FT. STEM UNITS)

DIMENSIONS

LINE IS 2 INCHES AT FULL SIZE (IF NOT 2"—SCALE ACCORDINGLY)

DESIGNED TLR
DRAWN TDC
REVIEWED TLR

SHEET NUMBER
27 OF 52

GRAVIX Precast Wall System (2019-10-28) REV.dwg
10/28/2019 12:05 PM

THIS SHEET PLOTS ON 22" x 34" ANSI D

© Copyright 2018 by Earth Wall Products, LLC. All rights reserved. This document is the property of Earth Wall Products, LLC. It is to be used only for the specific project referred to or identified herein and is not to be used on other projects, in whole or in part, except by the express written agreement of Earth Wall Products, LLC.

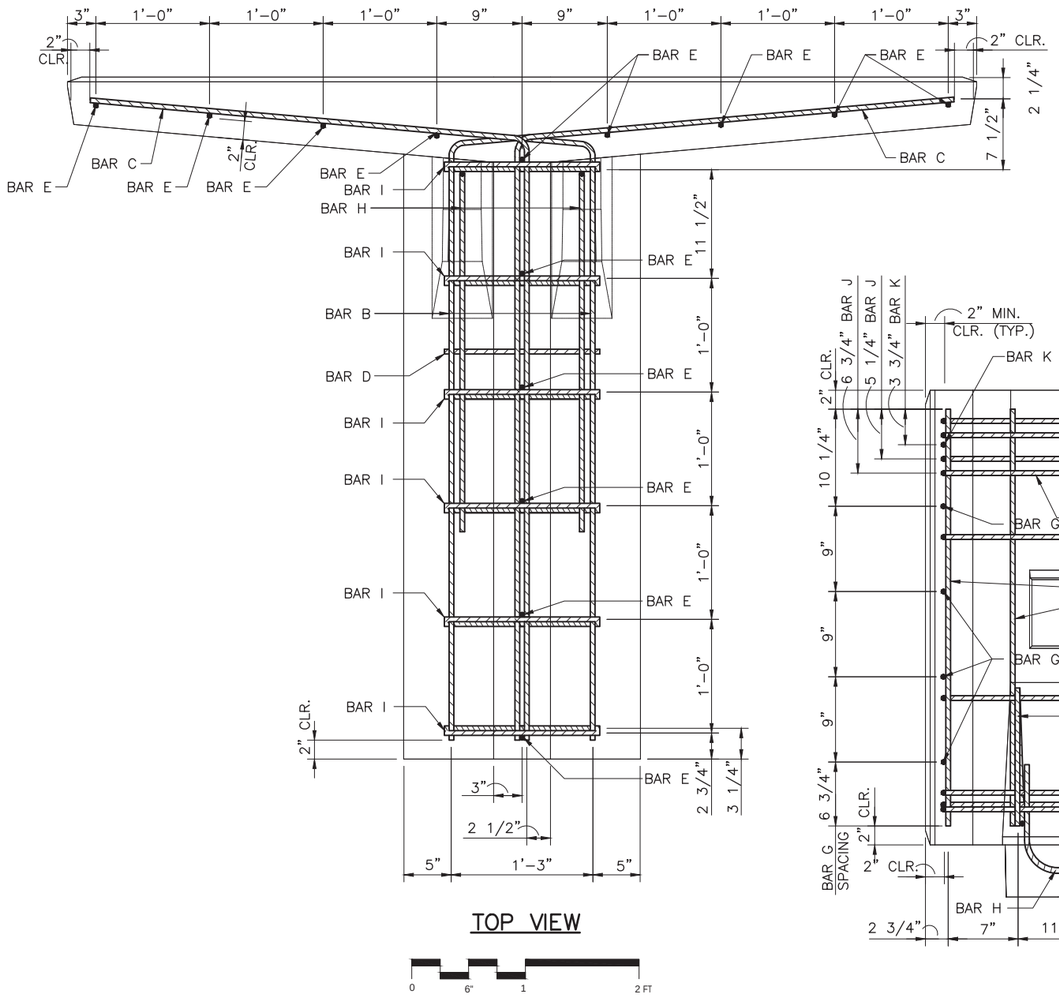

TOP VIEW

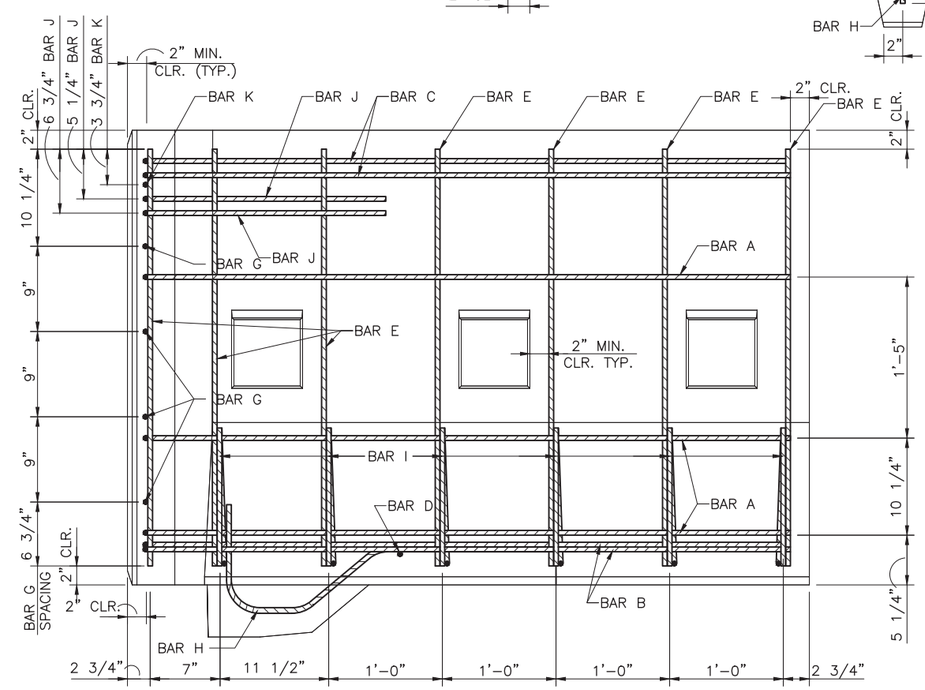

SIDE VIEW

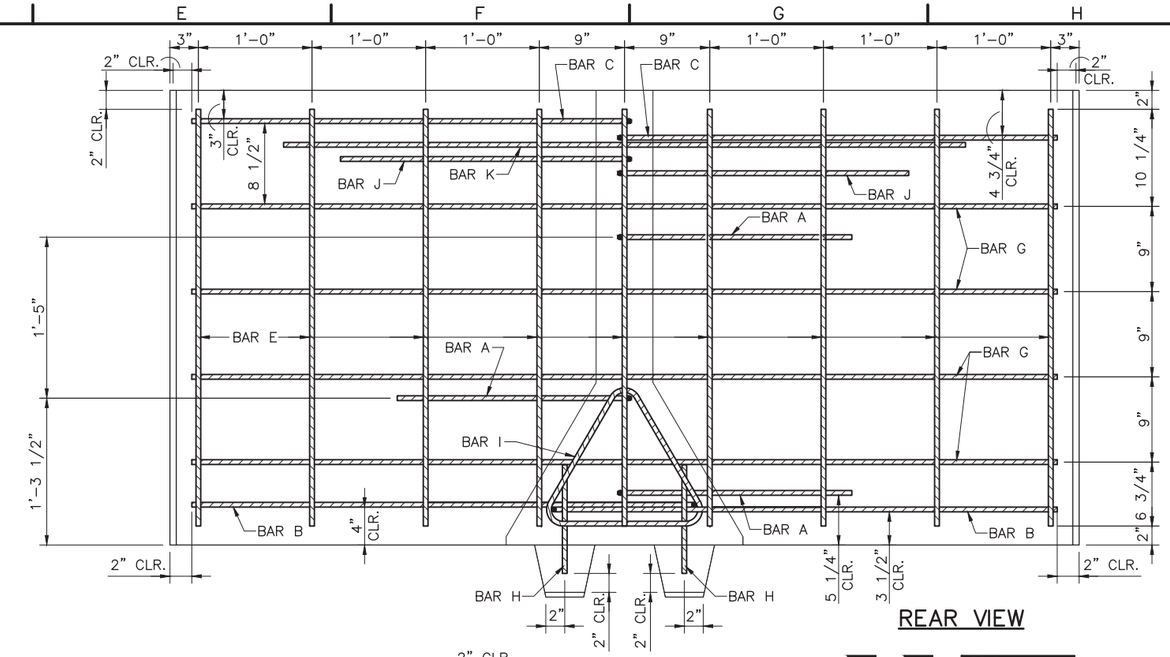

REAR VIEW

NOTE:

1. THE VIEWS ARE DRAWN FOR A 6 FT STEM UNIT. ADJUST STEM IN 2 FT. INCREMENTS FOR 8, AND 10 FT. STEMS ACCORDINGLY.
2. THE TWO "B" BARS SHOULD BE 15" ON CENTER IN THE STEM FOR REBAR LAYOUT.
3. ADD 1 LIFTING BLOCKOUT AT 2'-0" SPACING FOR EACH 2'-0" EXTENSION OF STEM.
4. STEMS LESS THAN 6'-0" MAY BE USED WHERE LONGER STEMS CONFLICT WITH THE STEMS OF OTHER UNITS. IN ALL CASES, UNITS WITH STEMS LESS THAN 6'-0" MUST BE MECHANICALLY CONNECTED TO THE FULL STEM UNIT THEY INTERSECT. THE DETAILS ON THIS SHEET MAY BE USED AS A GUIDELINE FOR THE DETAILING OF THE SPECIAL UNIT WITH STEMS LESS THAN 6'-0".

12/13/2019

REVISIONS

REV.	DESCRIPTION	BY	DATE
2	UPDATED PER REVIEW COMMENTS	TR	08/31/14
3	UPDATED PER REVIEW COMMENTS	TR	12/21/18
4	UPDATED PER REVIEW COMMENTS	TDC	7/9/19
5	UPDATED PER REVIEW COMMENTS	TDC	7/11/19
6	UPDATED PER REVIEW COMMENTS	TDC	9/27/19
7	UPDATED PER REVIEW COMMENTS	TDC	10/28/19

GRAVIX

PennDOT Precast Wall System

GRAVIX IS A LICENSED PRODUCT OF EARTH WALL PRODUCTS, LLC

I CERTIFY THAT ALL ASSUMPTIONS MADE IN DESIGNING THIS WALL HAVE BEEN VALIDATED THROUGH CONSTRUCTION DETAILS, SPECIAL NOTES AND / OR INSTRUCTIONS TO THE FABRICATOR, ERECTOR AND CONTRACTOR. CERTIFIED WITH RESPECT TO BEARING, SLIDING, INTERNAL STABILITY AND OVERTURNING OF THE GRAVIX STRUCTURE ONLY.

COMMONWEALTH OF PENNSYLVANIA
DEPARTMENT OF TRANSPORTATION

DRAWING NUMBER # 2016-296

STANDARD UNIT
(6 TO 12 FT. STEM UNITS)

REINFORCEMENT LAYOUT

LINE IS 2 INCHES AT FULL SIZE (IF NOT 2"–SCALE ACCORDINGLY)

DESIGNED TLR
DRAWN TDC
REVIEWED TLR

SHEET NUMBER
28 OF 52

THIS SHEET PLOTS ON 22" x 34" ANSI D

© Copyright 2018 by Earth Wall Products, LLC. All rights reserved. This document is the property of Earth Wall Products, LLC. It is to be used only for the specific project referred to or identified herein and is not to be used on other projects, in whole or in part, except by the express written agreement of Earth Wall Products, LLC.

GRAVIX Precast Wall System (2019-10-28) REV.dwg
10/28/2019 12:06 PM

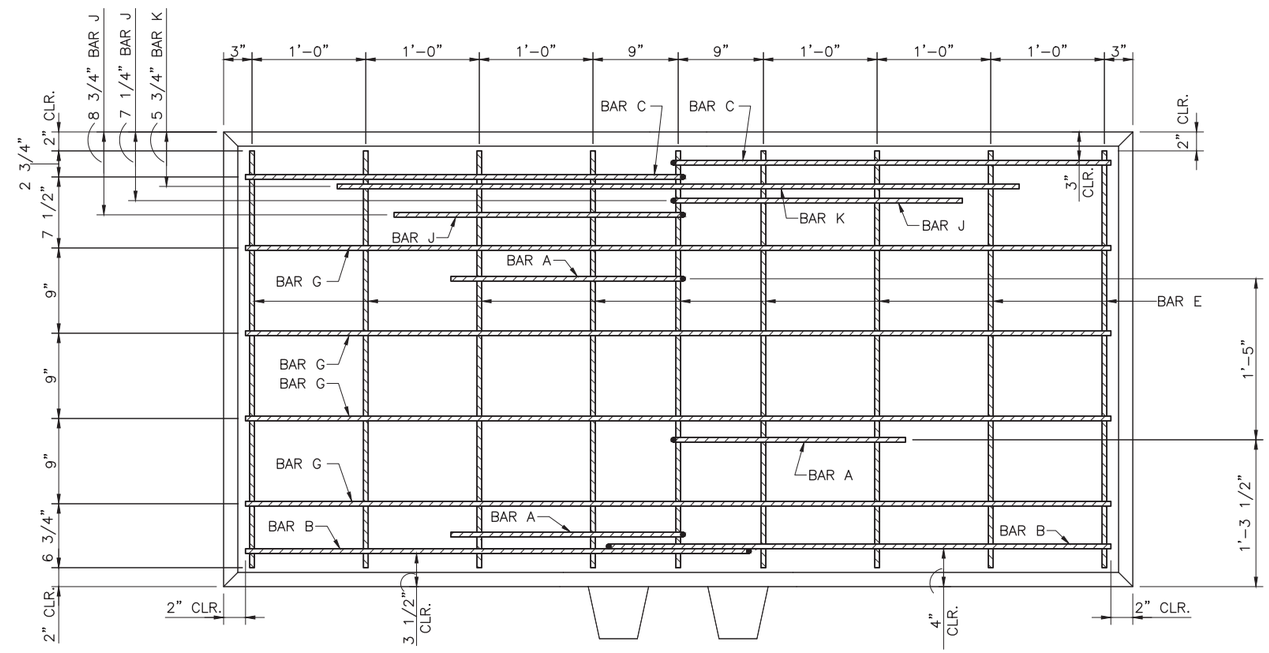

FRONT VIEW

0 6" 1 2 FT

NOTE:
1. THE VIEWS ARE DRAWN FOR A 6 FT STEM UNIT. ADJUST STEM IN 2 FT. INCREMENTS FOR 8, AND 10 FT. STEMS ACCORDINGLY.

12/13/2019

REVISIONS

REV.	DESCRIPTION	BY	DATE
2	UPDATED PER REVIEW COMMENTS	TR	08/31/14
3	UPDATED PER REVIEW COMMENTS	TR	12/21/18
4	UPDATED PER REVIEW COMMENTS	TDC	7/9/19
5	UPDATED PER REVIEW COMMENTS	TDC	7/11/19
6	UPDATED PER REVIEW COMMENTS	TDC	9/27/19
7	UPDATED PER REVIEW COMMENTS	TDC	10/28/19

GRAVIX
PennDOT Precast Wall System
GRAVIX IS A LICENSED PRODUCT OF EARTH WALL PRODUCTS, LLC

I CERTIFY THAT ALL ASSUMPTIONS MADE IN DESIGNING THIS WALL HAVE BEEN VALIDATED THROUGH CONSTRUCTION DETAILS, SPECIAL NOTES AND / OR INSTRUCTIONS TO THE FABRICATOR, ERECTOR AND CONTRACTOR. CERTIFIED WITH RESPECT TO BEARING, SLIDING, INTERNAL STABILITY AND OVERTURNING OF THE GRAVIX STRUCTURE ONLY.

COMMONWEALTH OF PENNSYLVANIA
DEPARTMENT OF TRANSPORTATION

DRAWING NUMBER # 2016-296

STANDARD UNIT
(6 TO 12 FT. STEM UNITS)

REINFORCEMENT LAYOUT - 2

LINE IS 2 INCHES AT FULL SIZE (IF NOT 2"—SCALE ACCORDINGLY)

DESIGNED TLR
DRAWN TDC
REVIEWED TLR

SHEET NUMBER
29 OF 52

THIS SHEET PLOTS ON 22" x 34" ANSI D

© Copyright 2018 by Earth Wall Products, LLC. All rights reserved. This document is the property of Earth Wall Products, LLC. It is to be used only for the specific project referred to or identified herein and is not to be used on other projects, in whole or in part, except by the express written agreement of Earth Wall Products, LLC.

GRAVIX Precast Wall System (2019-10-28) REV.dwg
10/28/2019 12:06 PM

BAR A6–A12

BAR	STEM	LENGTH
A6	6 FT	5' 4–1/2"
A8	8 FT	7' 4–1/2"
A10	10 FT	9' 4–1/2"
A12	12 FT	11' 4–1/2"

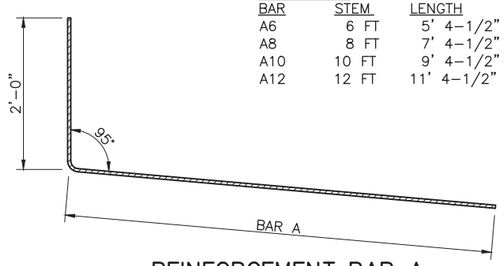

REINFORCEMENT BAR A
3 REQUIRED

BAR B6–B12

BAR	STEM	LENGTH
B6	6 FT	5' 3–3/4"
B8	8 FT	7' 3–3/4"
B10	10 FT	9' 3–3/4"
B12	12 FT	11' 3–3/4"

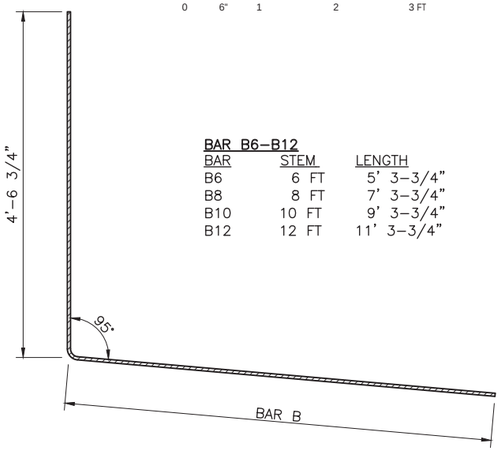

REINFORCEMENT BAR B
2 REQUIRED

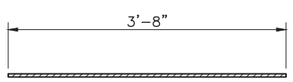

BAR E

STEM	
6 FT	14 REQUIRED
8 FT	16 REQUIRED
10 FT	18 REQUIRED
12 FT	20 REQUIRED

REINFORCEMENT BAR E

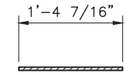

REINFORCEMENT BAR D
1 REQUIRED

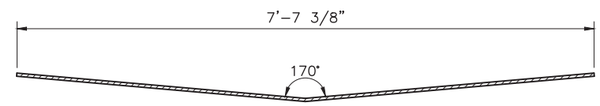

REINFORCEMENT BAR G
4 REQUIRED

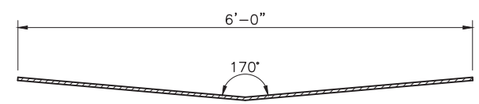

REINFORCEMENT BAR K
1 REQUIRED

BAR C6–12

BAR	STEM	LENGTH
C6	6 FT	5' 4–1/2"
C8	8 FT	7' 4–1/2"
C10	10 FT	9' 4–1/2"
C12	12 FT	11' 4–1/2"

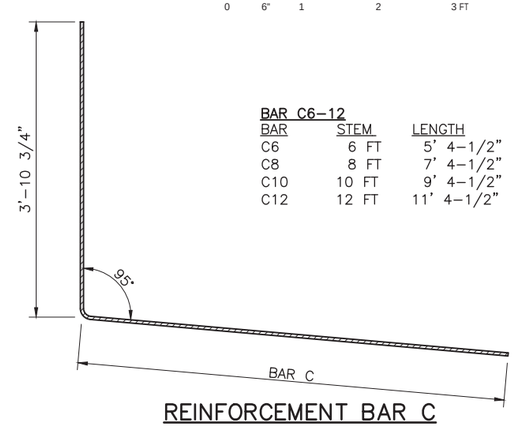

REINFORCEMENT BAR C
2 REQUIRED

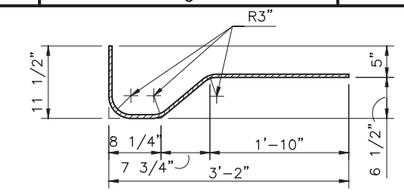

REINFORCEMENT BAR H
2 REQUIRED

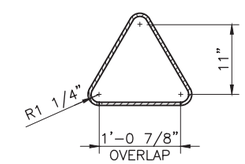

BAR I

STEM	
6 FT	6 REQUIRED
8 FT	8 REQUIRED
10 FT	10 REQUIRED
12 FT	12 REQUIRED

REINFORCEMENT BAR I

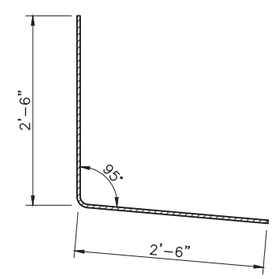

REINFORCEMENT BAR J
2 REQUIRED

REINFORCEMENT NOTES:
1. MINIMUM CLEARANCE TO EDGE – 2"
2. ALL STEEL REBAR TO BE #4

12/13/2019

REVISIONS

REV.	DESCRIPTION	BY	DATE
2	UPDATED PER REVIEW COMMENTS	TR	08/31/14
3	UPDATED PER REVIEW COMMENTS	TR	12/21/18
4	UPDATED PER REVIEW COMMENTS	TDC	7/9/19
5	UPDATED PER REVIEW COMMENTS	TDC	7/11/19
6	UPDATED PER REVIEW COMMENTS	TDC	9/27/19
7	UPDATED PER REVIEW COMMENTS	TDC	10/28/19

GRAVIX
PennDOT Precast Wall System
GRAVIX IS A LICENSED PRODUCT OF EARTH WALL PRODUCTS, LLC

I CERTIFY THAT ALL ASSUMPTIONS MADE IN DESIGNING THIS WALL HAVE BEEN VALIDATED THROUGH CONSTRUCTION DETAILS, SPECIAL NOTES AND / OR INSTRUCTIONS TO THE FABRICATOR, ERECTOR AND CONTRACTOR. CERTIFIED WITH RESPECT TO BEARING, SLIDING, INTERNAL STABILITY AND OVERTURNING OF THE GRAVIX STRUCTURE ONLY.

COMMONWEALTH OF PENNSYLVANIA
REGISTERED PROFESSIONAL
LANCE G. GRAVOIS
ENGINEER
PE-072410
PENNSYLVANIA
10.28.19

COMMONWEALTH OF PENNSYLVANIA
DEPARTMENT OF TRANSPORTATION

DRAWING NUMBER # 2016-296

STANDARD UNIT
(6 TO 12 FT. STEM UNITS)

REBAR DETAILS

LINE IS 2 INCHES AT FULL SIZE (IF NOT 2"–SCALE ACCORDINGLY)

DESIGNED TLR
DRAWN TDC
REVIEWED TLR

SHEET NUMBER
30 OF 52

THIS SHEET PLOTS ON 22" x 34" ANSI D

© Copyright 2018 by Earth Wall Products, LLC. All rights reserved. This document is the property of Earth Wall Products, LLC. It is to be used only for the specific project referred to or identified herein and is not to be used on other projects, in whole or in part, except by the express written agreement of Earth Wall Products, LLC.

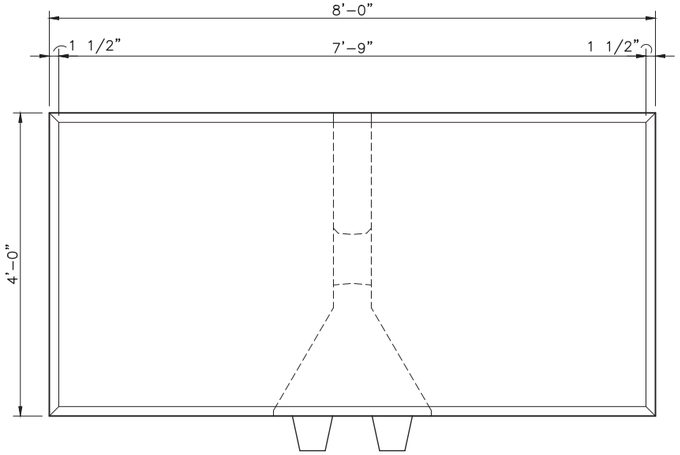

FRONT VIEW

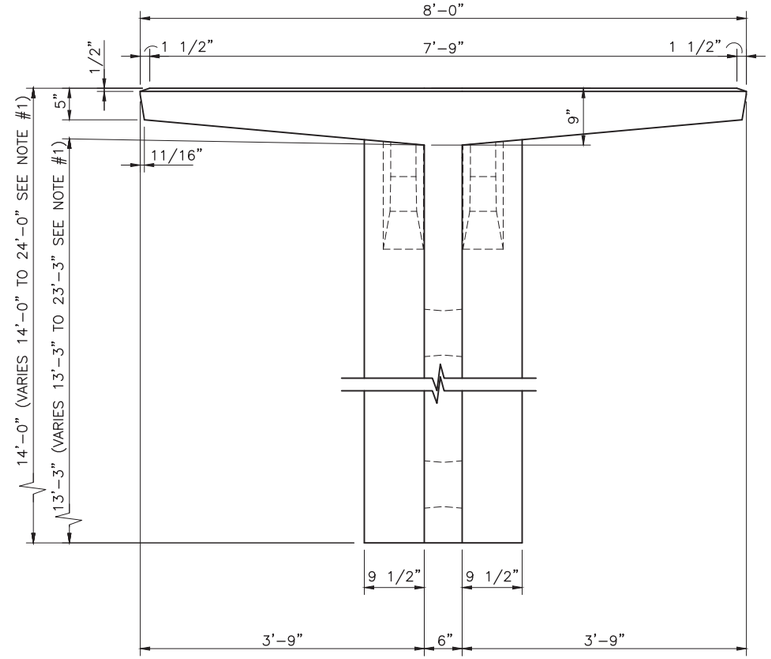

TOP VIEW

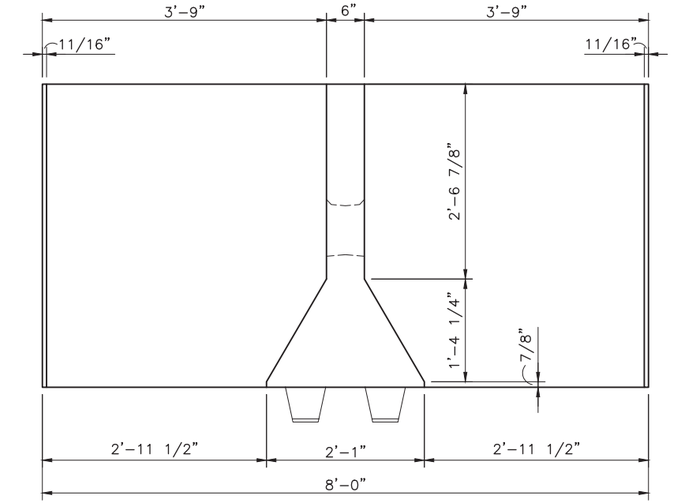

REAR VIEW

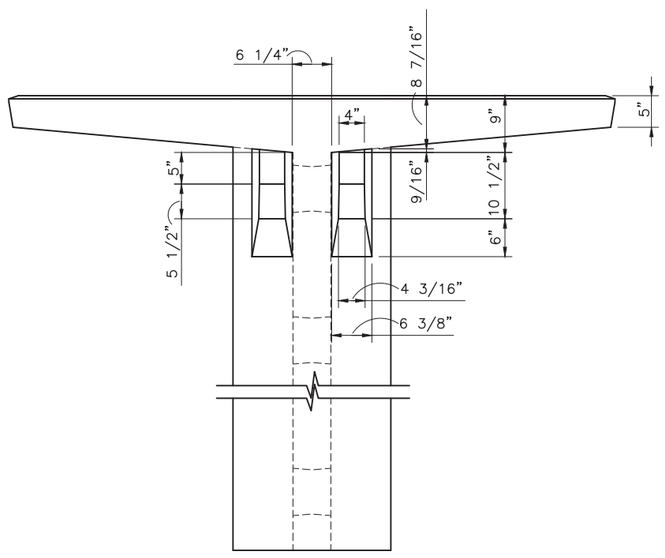

BOTTOM VIEW

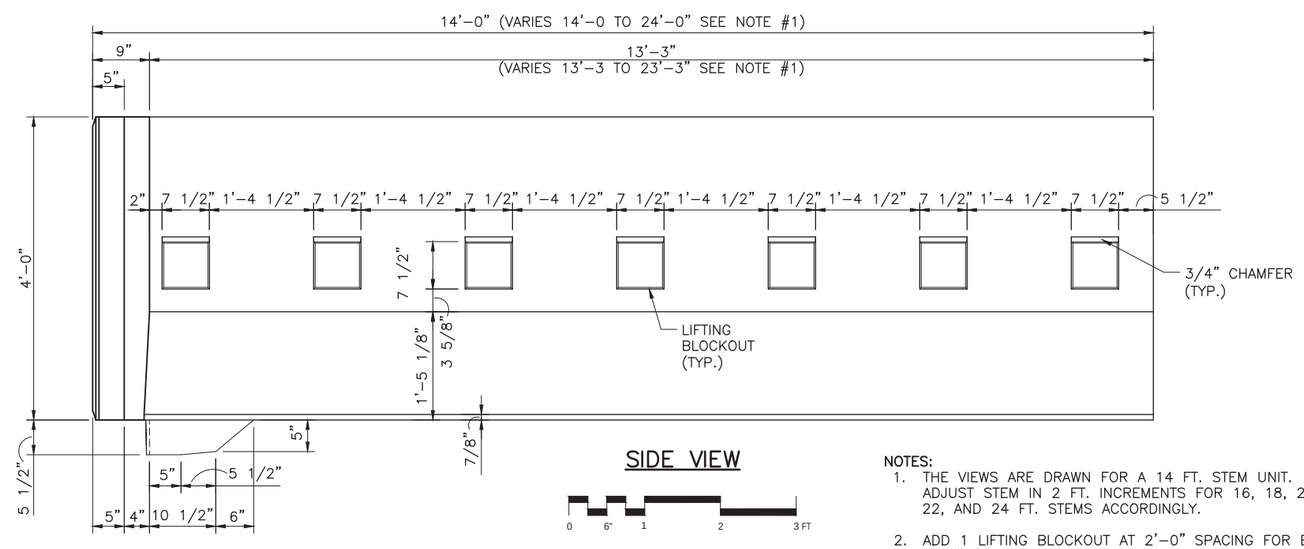

SIDE VIEW

NOTES:

1. THE VIEWS ARE DRAWN FOR A 14 FT. STEM UNIT. ADJUST STEM IN 2 FT. INCREMENTS FOR 16, 18, 20, 22, AND 24 FT. STEMS ACCORDINGLY.
2. ADD 1 LIFTING BLOCKOUT AT 2'-0" SPACING FOR EACH 2'-0" EXTENSION OF THE STEM.

12/13/2019

REVISIONS

REV.	DESCRIPTION	BY	DATE
2	UPDATED PER REVIEW COMMENTS	TR	08/31/14
3	UPDATED PER REVIEW COMMENTS	TR	12/21/18
4	UPDATED PER REVIEW COMMENTS	TDC	7/9/19
5	UPDATED PER REVIEW COMMENTS	TDC	7/11/19
6	UPDATED PER REVIEW COMMENTS	TDC	9/27/19
7	UPDATED PER REVIEW COMMENTS	TDC	10/28/19

GRAVIX

PennDOT Precast Wall System

GRAVIX IS A LICENSED PRODUCT OF EARTH WALL PRODUCTS, LLC

I CERTIFY THAT ALL ASSUMPTIONS MADE IN DESIGNING THIS WALL HAVE BEEN VALIDATED THROUGH CONSTRUCTION DETAILS, SPECIAL NOTES AND / OR INSTRUCTIONS TO THE FABRICATOR, ERECTOR AND CONTRACTOR. CERTIFIED WITH RESPECT TO BEARING, SLIDING, INTERNAL STABILITY AND OVERTURNING OF THE GRAVIX STRUCTURE ONLY.

COMMONWEALTH OF PENNSYLVANIA
DEPARTMENT OF TRANSPORTATION

DRAWING NUMBER # 2016-296

STANDARD UNIT
(14 TO 24 FT. STEM UNITS)

DIMENSIONS

LINE IS 2 INCHES AT FULL SIZE (IF NOT 2"–SCALE ACCORDINGLY)

DESIGNED TLR
DRAWN TDC
REVIEWED TLR

SHEET NUMBER
31 OF 52

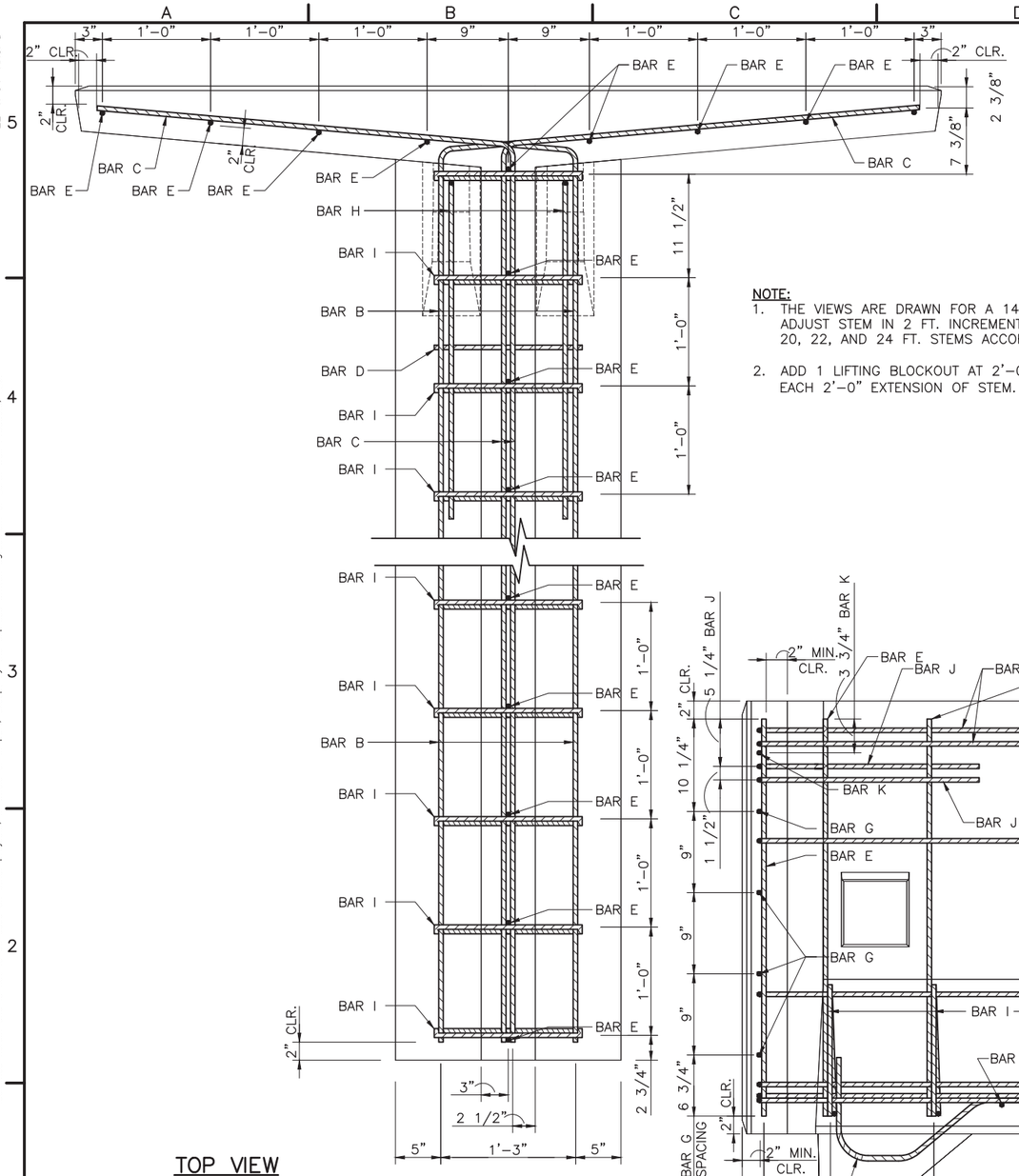

TOP VIEW

SIDE VIEW

NOTE:

1. THE VIEWS ARE DRAWN FOR A 14 FT STEM UNIT. ADJUST STEM IN 2 FT. INCREMENTS FOR 16, 18, 20, 22, AND 24 FT. STEMS ACCORDINGLY.
2. ADD 1 LIFTING BLOCKOUT AT 2'-0" SPACING FOR EACH 2'-0" EXTENSION OF STEM.

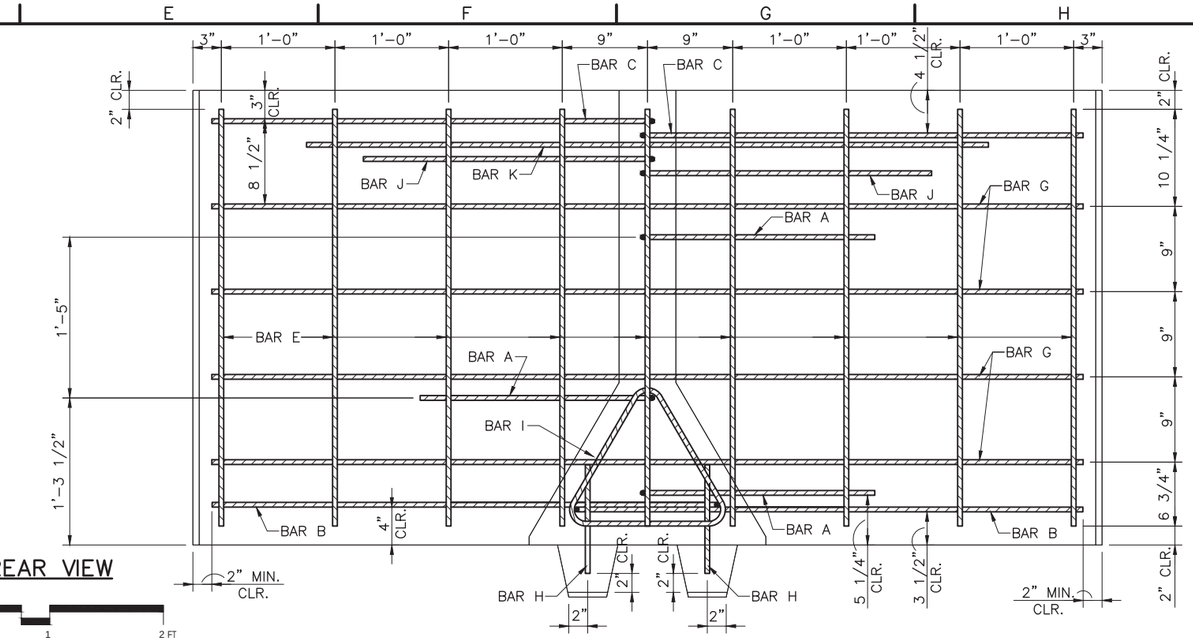

REAR VIEW

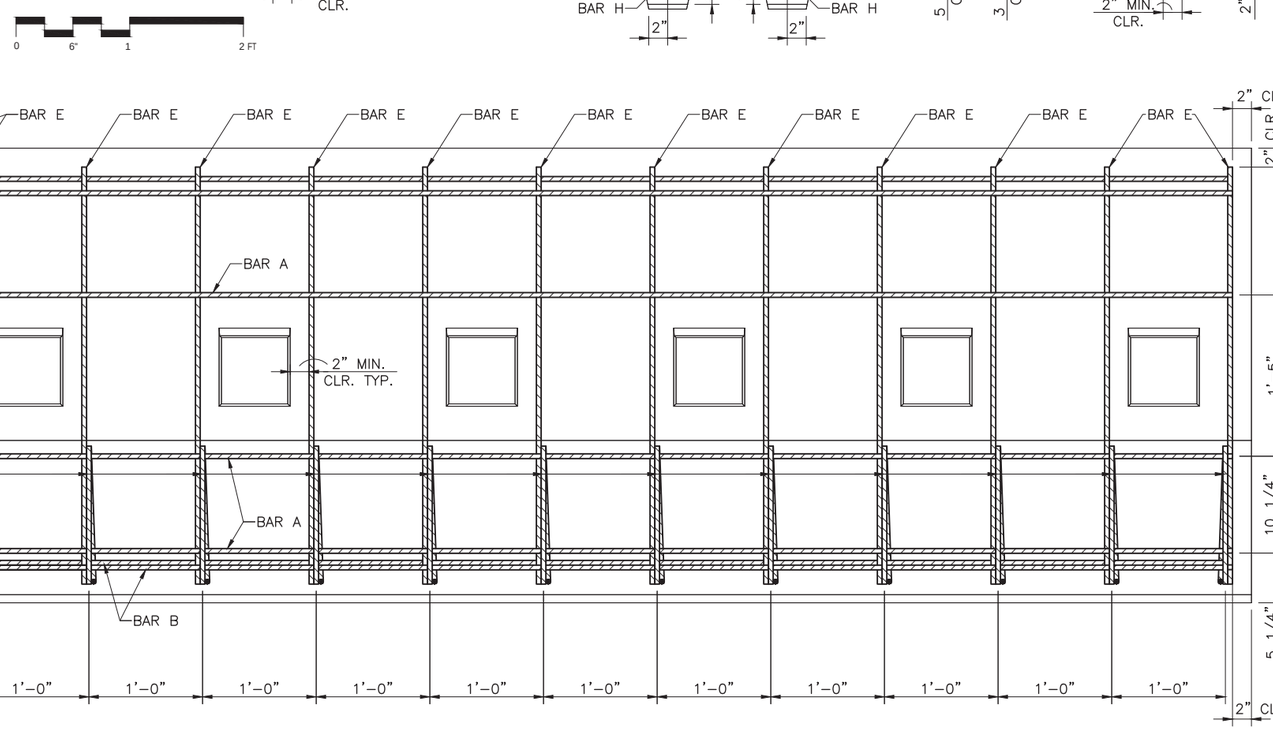

12/13/2019

© Copyright 2018 by Earth Wall Products, LLC. All rights reserved. This document is the property of Earth Wall Products, LLC. It is to be used only for the specific project referred to or identified herein and is not to be used on other projects, in whole or in part, except by the express written agreement of Earth Wall Products, LLC.

THIS SHEET PLOTS ON 22" x 34" ANSI D

GRAVIX Precast Wall System (2019-10-28) REV.dwg
10/28/2019 12:06 PM

REVISIONS

REV.	DESCRIPTION	BY	DATE
2	UPDATED PER REVIEW COMMENTS	TR	08/31/14
3	UPDATED PER REVIEW COMMENTS	TR	12/21/18
4	UPDATED PER REVIEW COMMENTS	TDC	7/9/19
5	UPDATED PER REVIEW COMMENTS	TDC	7/11/19
6	UPDATED PER REVIEW COMMENTS	TDC	9/27/19
7	UPDATED PER REVIEW COMMENTS	TDC	10/28/19

GRAVIX
PennDOT Precast Wall System
GRAVIX IS A LICENSED PRODUCT OF EARTH WALL PRODUCTS, LLC

I CERTIFY THAT ALL ASSUMPTIONS MADE IN DESIGNING THIS WALL HAVE BEEN VALIDATED THROUGH CONSTRUCTION DETAILS, SPECIAL NOTES AND / OR INSTRUCTIONS TO THE FABRICATOR, ERECTOR AND CONTRACTOR. CERTIFIED WITH RESPECT TO BEARING, SLIDING, INTERNAL STABILITY AND OVERTURNING OF THE GRAVIX STRUCTURE ONLY.

COMMONWEALTH OF PENNSYLVANIA
REGISTERED PROFESSIONAL ENGINEER
LANCE G. PARADIS
PE-27419
10/28/19

COMMONWEALTH OF PENNSYLVANIA
DEPARTMENT OF TRANSPORTATION

DRAWING NUMBER # 2016-296

STANDARD UNIT
(14 TO 24 FT. STEM UNITS)

REINFORCEMENT LAYOUT - 1

LINE IS 2 INCHES AT FULL SIZE (IF NOT 2"–SCALE ACCORDINGLY)

DESIGNED TLR
DRAWN TDC
REVIEWED TLR

SHEET NUMBER
32 OF 52

THIS SHEET PLOTS ON 22" x 34" ANSI D

© Copyright 2018 by Earth Wall Products, LLC. All rights reserved. This document is the property of Earth Wall Products, LLC. It is to be used only for the specific project referred to or identified herein and is not to be used on other projects, in whole or in part, except by the express written agreement of Earth Wall Products, LLC.

GRAVIX Precast Wall System (2019-10-28) REV.dwg
10/28/2019 12:06 PM

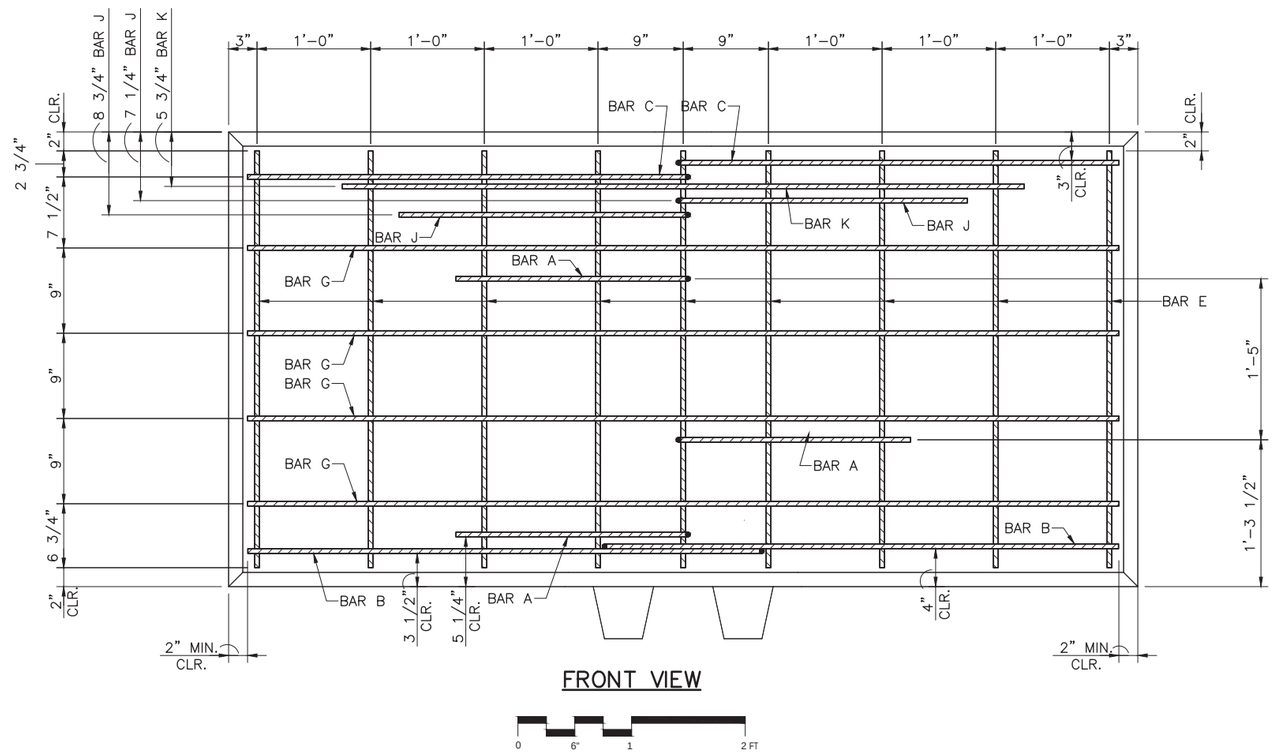

FRONT VIEW

12/13/2019

REVISIONS			
REV.	DESCRIPTION	BY	DATE
2	UPDATED PER REVIEW COMMENTS	TR	08/31/14
3	UPDATED PER REVIEW COMMENTS	TR	12/21/18
4	UPDATED PER REVIEW COMMENTS	TDC	7/9/19
5	UPDATED PER REVIEW COMMENTS	TDC	7/11/19
6	UPDATED PER REVIEW COMMENTS	TDC	9/27/19
7	UPDATED PER REVIEW COMMENTS	TDC	10/28/19

GRAVIX

PennDOT Precast Wall System

GRAVIX IS A LICENSED PRODUCT OF EARTH WALL PRODUCTS, LLC

I CERTIFY THAT ALL ASSUMPTIONS MADE IN DESIGNING THIS WALL HAVE BEEN VALIDATED THROUGH CONSTRUCTION DETAILS, SPECIAL NOTES AND / OR INSTRUCTIONS TO THE FABRICATOR, ERECTOR AND CONTRACTOR. CERTIFIED WITH RESPECT TO BEARING, SLIDING, INTERNAL STABILITY AND OVERTURNING OF THE GRAVIX STRUCTURE ONLY.

COMMONWEALTH OF PENNSYLVANIA
DEPARTMENT OF TRANSPORTATION

DRAWING NUMBER # 2016-296

STANDARD UNIT
(14 TO 24 FT. STEM UNITS)

REINFORCEMENT LAYOUT - 2

LINE IS 2 INCHES AT FULL SIZE (IF NOT 2"-SCALE ACCORDINGLY)

DESIGNED TLR
DRAWN TDC
REVIEWED TLR

SHEET NUMBER
33 OF 52

THIS SHEET PLOTS ON 22" x 34" ANSI D

© Copyright 2018 by Earth Wall Products, LLC. All rights reserved. This document is the property of Earth Wall Products, LLC. It is to be used only for the specific project referred to or identified herein and is not to be used on other projects, in whole or in part, except by the express written agreement of Earth Wall Products, LLC.

GRAVIX Precast Wall System (2019-10-28) REV.dwg
10/28/2019 12:06 PM

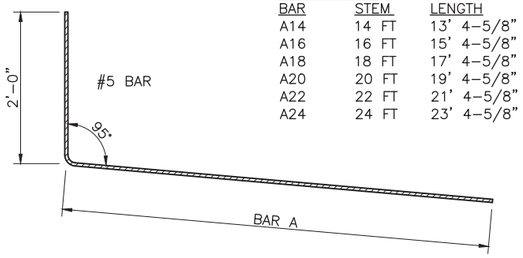

BAR A14–A24

BAR	STEM	LENGTH
A14	14 FT	13' 4-5/8"
A16	16 FT	15' 4-5/8"
A18	18 FT	17' 4-5/8"
A20	20 FT	19' 4-5/8"
A22	22 FT	21' 4-5/8"
A24	24 FT	23' 4-5/8"

REINFORCEMENT BAR A
3 REQUIRED

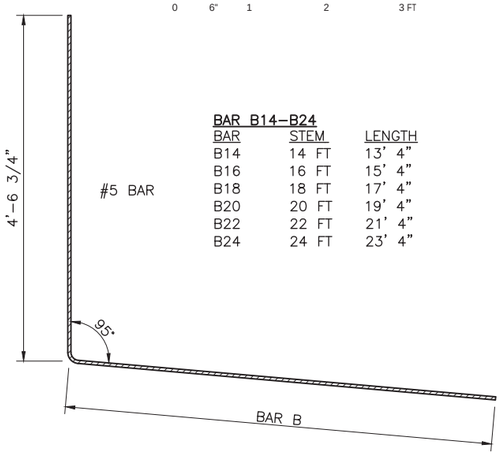

BAR B14–B24

BAR	STEM	LENGTH
B14	14 FT	13' 4"
B16	16 FT	15' 4"
B18	18 FT	17' 4"
B20	20 FT	19' 4"
B22	22 FT	21' 4"
B24	24 FT	23' 4"

REINFORCEMENT BAR B
2 REQUIRED

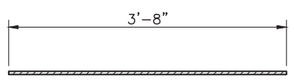

BAR E

STEM	
14 FT	22 REQUIRED
16 FT	24 REQUIRED
18 FT	26 REQUIRED
20 FT	28 REQUIRED
22 FT	30 REQUIRED
24 FT	32 REQUIRED

REINFORCEMENT BAR E

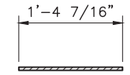

REINFORCEMENT BAR D
1 REQUIRED

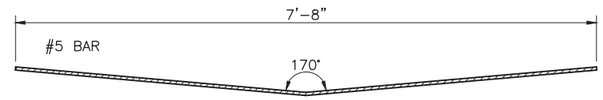

REINFORCEMENT BAR G
4 REQUIRED

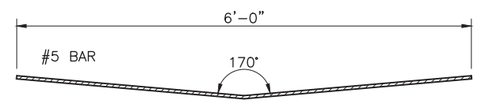

REINFORCEMENT BAR K
1 REQUIRED

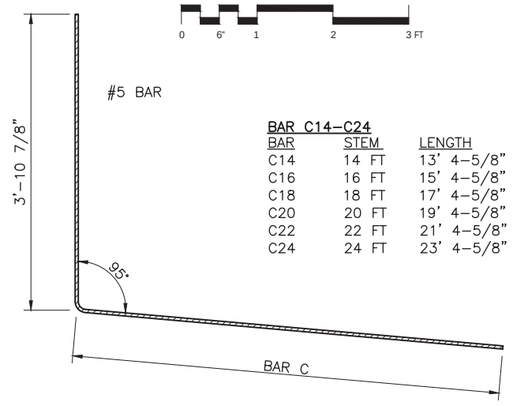

BAR C14–C24

BAR	STEM	LENGTH
C14	14 FT	13' 4-5/8"
C16	16 FT	15' 4-5/8"
C18	18 FT	17' 4-5/8"
C20	20 FT	19' 4-5/8"
C22	22 FT	21' 4-5/8"
C24	24 FT	23' 4-5/8"

REINFORCEMENT BAR C
2 REQUIRED

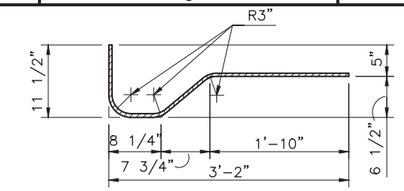

REINFORCEMENT BAR H
2 REQUIRED

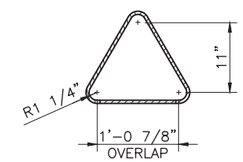

BAR I

STEM	
6 FT	6 REQUIRED
8 FT	8 REQUIRED
10 FT	10 REQUIRED
12 FT	12 REQUIRED

REINFORCEMENT BAR I

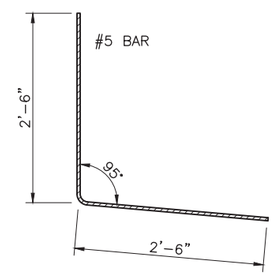

REINFORCEMENT BAR J
2 REQUIRED

REINFORCEMENT NOTES:
1. MINIMUM CLEARANCE TO EDGE – 2".

12/13/2019

REVISIONS

REV.	DESCRIPTION	BY	DATE
2	UPDATED PER REVIEW COMMENTS	TR	08/31/14
3	UPDATED PER REVIEW COMMENTS	TR	12/21/18
4	UPDATED PER REVIEW COMMENTS	TDC	7/9/19
5	UPDATED PER REVIEW COMMENTS	TDC	7/11/19
6	UPDATED PER REVIEW COMMENTS	TDC	9/27/19
7	UPDATED PER REVIEW COMMENTS	TDC	10/28/19

GRAVIX
PennDOT Precast Wall System
GRAVIX IS A LICENSED PRODUCT OF EARTH WALL PRODUCTS, LLC

I CERTIFY THAT ALL ASSUMPTIONS MADE IN DESIGNING THIS WALL HAVE BEEN VALIDATED THROUGH CONSTRUCTION DETAILS, SPECIAL NOTES AND / OR INSTRUCTIONS TO THE FABRICATOR, ERECTOR AND CONTRACTOR. CERTIFIED WITH RESPECT TO BEARING, SLIDING, INTERNAL STABILITY AND OVERTURNING OF THE GRAVIX STRUCTURE ONLY.

COMMONWEALTH OF PENNSYLVANIA
REGISTERED PROFESSIONAL
LANCE G. PARADISO
ENGINEER
No. 075749
COMMONWEALTH OF PENNSYLVANIA
10/28/19

COMMONWEALTH OF PENNSYLVANIA
DEPARTMENT OF TRANSPORTATION

DRAWING NUMBER # 2016-296

STANDARD UNIT
(14 TO 24 FT. STEM UNITS)

REBAR DETAILS

LINE IS 2 INCHES AT FULL SIZE
(IF NOT 2"–SCALE ACCORDINGLY)

DESIGNED TLR
DRAWN TDC
REVIEWED TLR

SHEET NUMBER
34 OF 52

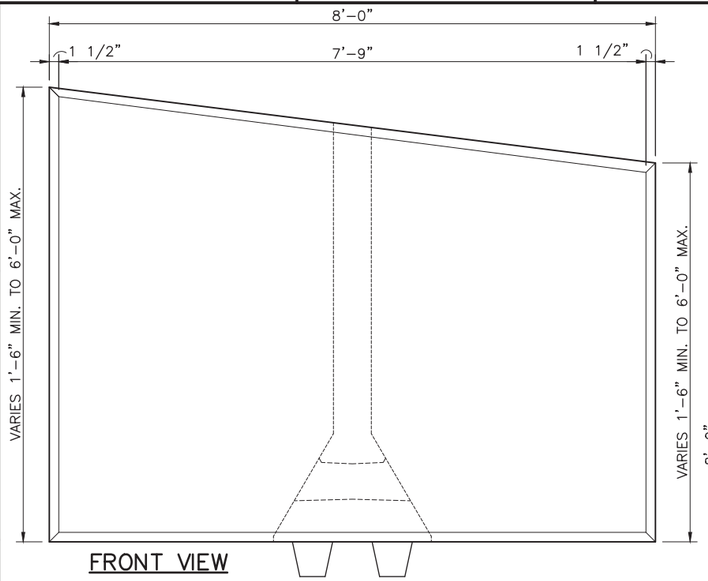

FRONT VIEW

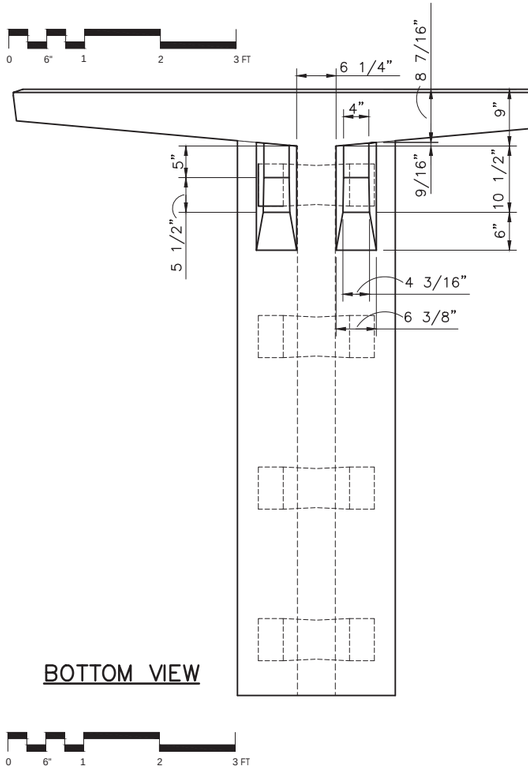

BOTTOM VIEW

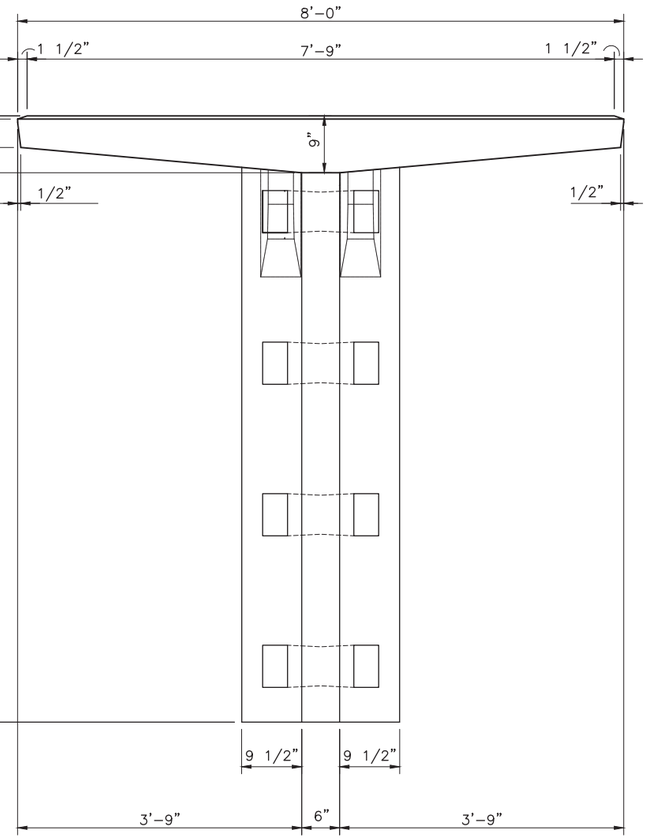

TOP VIEW

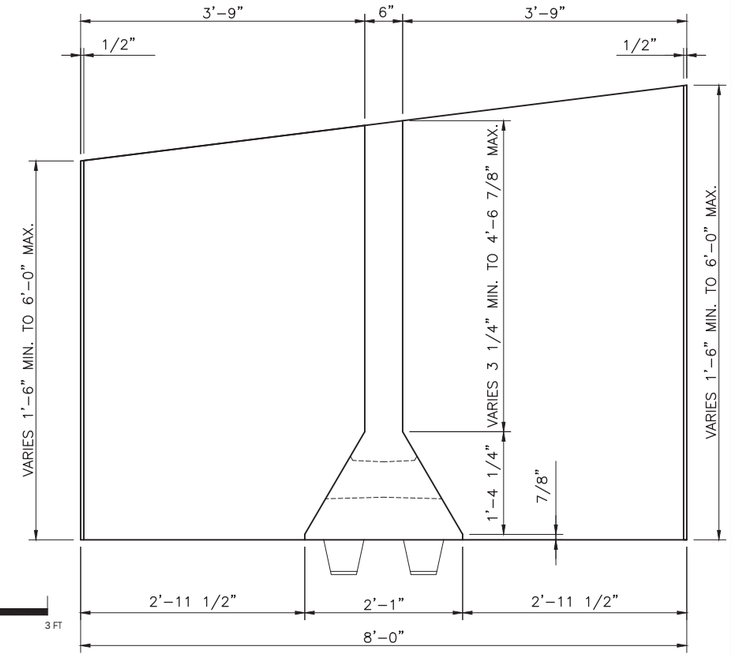

REAR VIEW

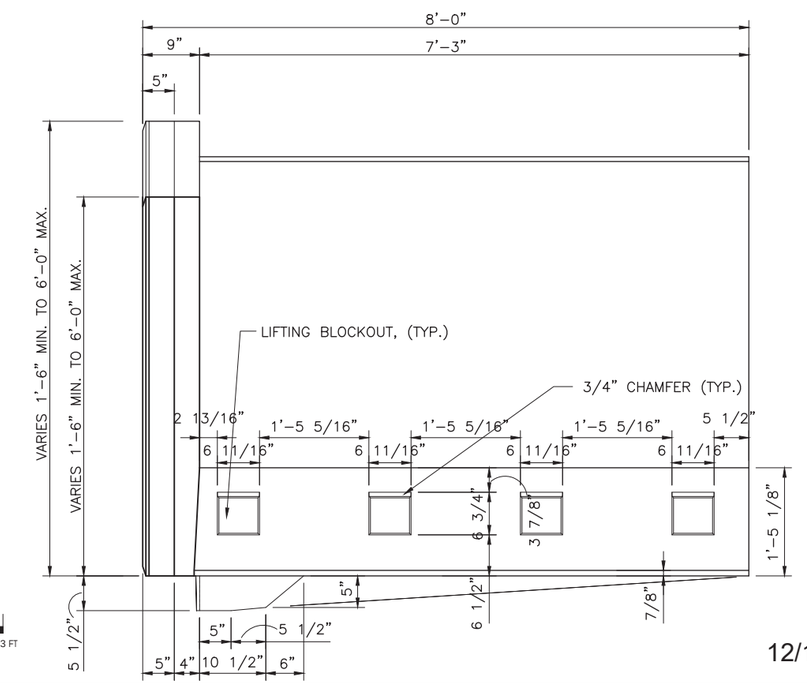

SIDE VIEW

NOTE
THESE UNITS SHALL NOT BE USED BELOW 12' FROM THE TOP OF THE WALL.

12/13/2019

THIS SHEET PLOTS ON 22" x 34" ANSI D

© Copyright 2018 by Earth Wall Products, LLC. All rights reserved. This document is the property of Earth Wall Products, LLC. It is to be used only for the specific project referred to or identified herein and is not to be used on other projects, in whole or in part, except by the express written agreement of Earth Wall Products, LLC.

GRAVIX Precast Wall System (2019-10-28) REV.dwg
10/28/2019 12:06 PM

REVISIONS

REV.	DESCRIPTION	BY	DATE
2	UPDATED PER REVIEW COMMENTS	TR	08/31/14
3	UPDATED PER REVIEW COMMENTS	TR	12/21/18
4	UPDATED PER REVIEW COMMENTS	TDC	7/9/19
5	UPDATED PER REVIEW COMMENTS	TDC	7/11/19
6	UPDATED PER REVIEW COMMENTS	TDC	9/27/19
7	UPDATED PER REVIEW COMMENTS	TDC	10/28/19

GRAVIX
PennDOT Precast Wall System
GRAVIX IS A LICENSED PRODUCT OF EARTH WALL PRODUCTS, LLC

I CERTIFY THAT ALL ASSUMPTIONS MADE IN DESIGNING THIS WALL HAVE BEEN VALIDATED THROUGH CONSTRUCTION DETAILS, SPECIAL NOTES AND / OR INSTRUCTIONS TO THE FABRICATOR, ERECTOR AND CONTRACTOR. CERTIFIED WITH RESPECT TO BEARING, SLIDING, INTERNAL STABILITY AND OVERTURNING OF THE GRAVIX STRUCTURE ONLY.

COMMONWEALTH OF PENNSYLVANIA
DEPARTMENT OF TRANSPORTATION

DRAWING NUMBER # 2016-296

LEVELING UNIT

DIMENSIONS

LINE IS 2 INCHES AT FULL SIZE (IF NOT 2"–SCALE ACCORDINGLY)

DESIGNED TLR
DRAWN TDC
REVIEWED TLR

SHEET NUMBER
35 OF 52

THIS SHEET PLOTS ON 22" x 34" ANSI D

© Copyright 2018 by Earth Wall Products, LLC. All rights reserved. This document is the property of Earth Wall Products, LLC. It is to be used only for the specific project referred to or identified herein and is not to be used on other projects, in whole or in part, except by the express written agreement of Earth Wall Products, LLC.

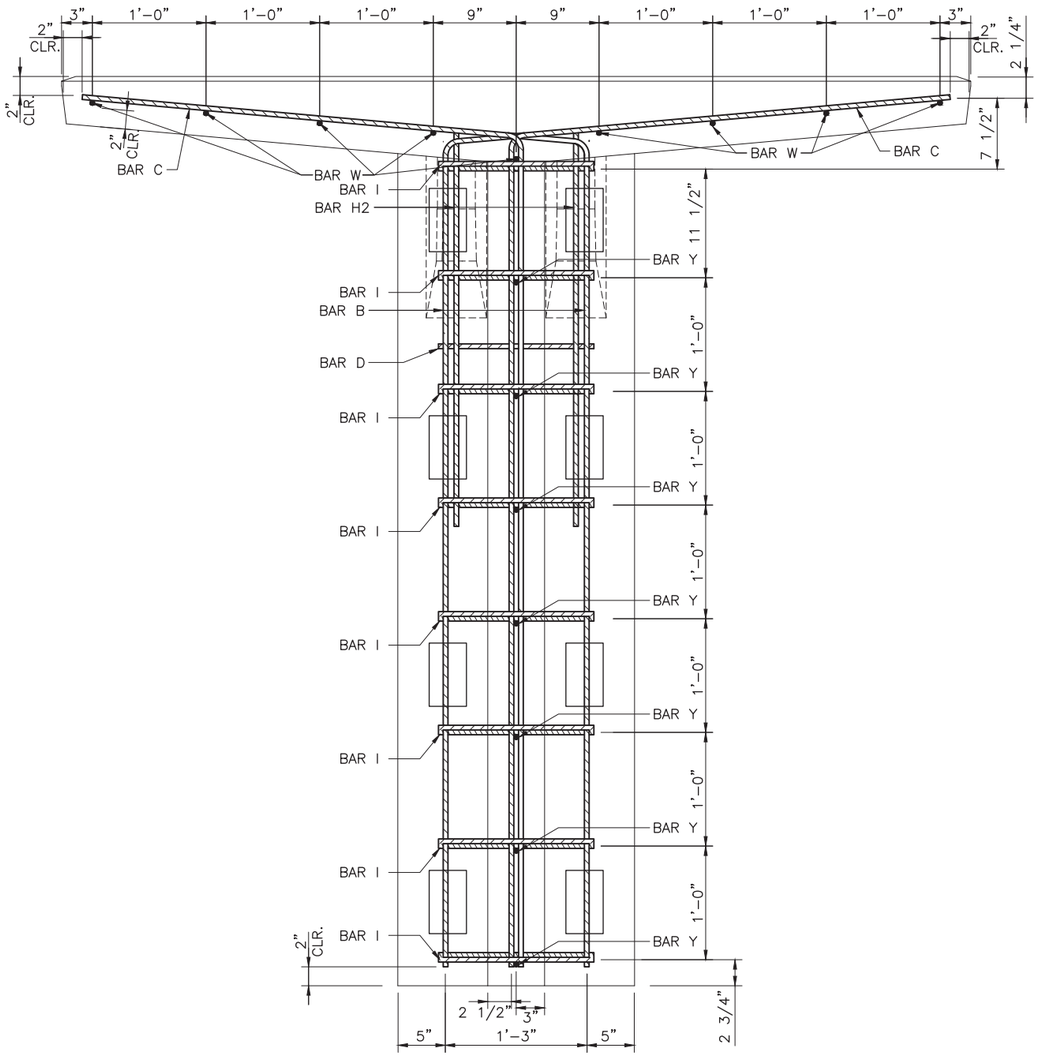

TOP VIEW

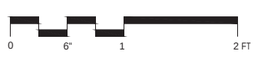

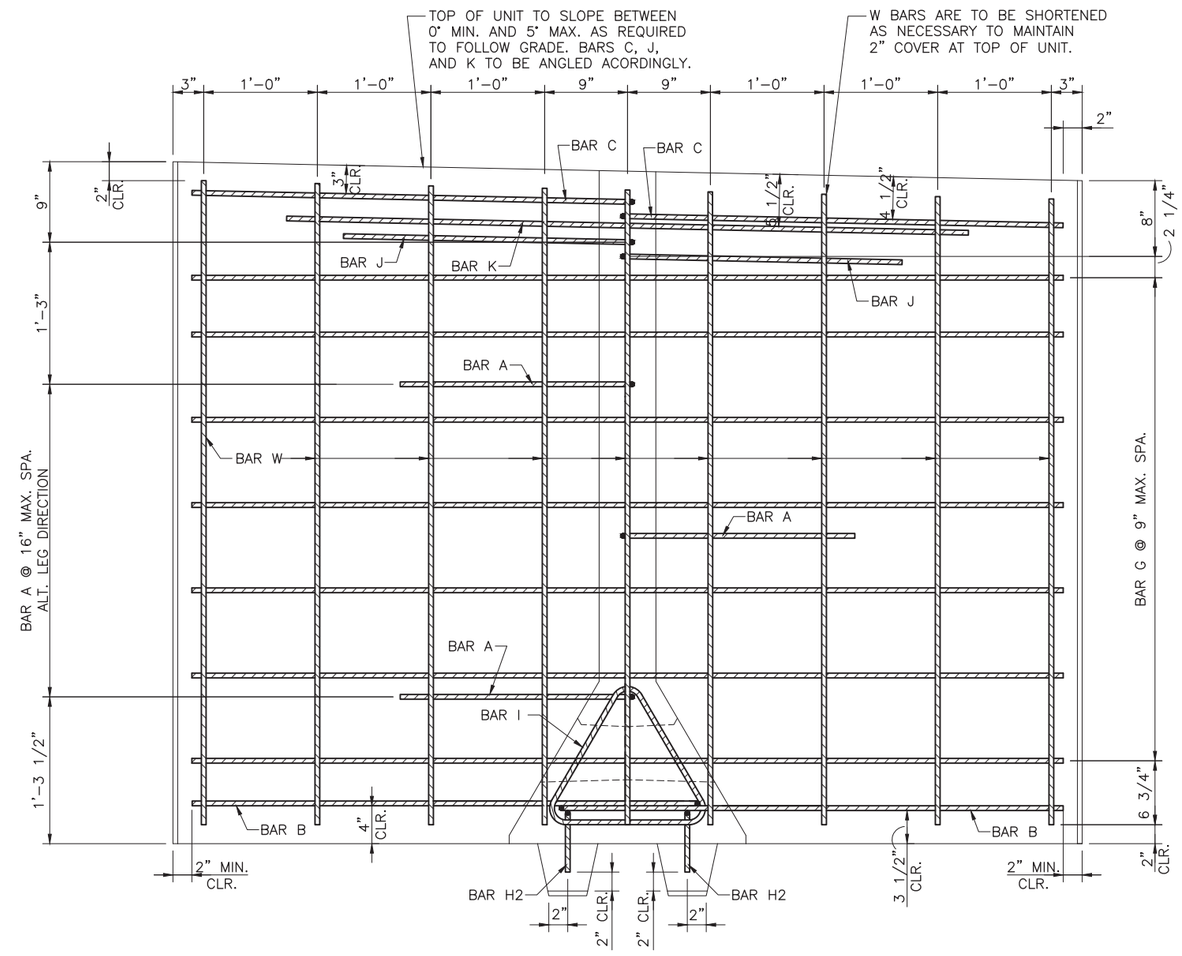

REAR VIEW

12/13/2019

GRAVIX Precast Wall System (2019-10-28) REV.dwg
10/28/2019 12:06 PM

REVISIONS

REV.	DESCRIPTION	BY	DATE
2	UPDATED PER REVIEW COMMENTS	TR	08/31/14
3	UPDATED PER REVIEW COMMENTS	TR	12/21/18
4	UPDATED PER REVIEW COMMENTS	TDC	7/9/19
5	UPDATED PER REVIEW COMMENTS	TDC	7/11/19
6	UPDATED PER REVIEW COMMENTS	TDC	9/27/19
7	UPDATED PER REVIEW COMMENTS	TDC	10/28/19

GRAVIX
PennDOT Precast Wall System
GRAVIX IS A LICENSED PRODUCT OF EARTH WALL PRODUCTS, LLC

I CERTIFY THAT ALL ASSUMPTIONS MADE IN DESIGNING THIS WALL HAVE BEEN VALIDATED THROUGH CONSTRUCTION DETAILS, SPECIAL NOTES AND / OR INSTRUCTIONS TO THE FABRICATOR, ERECTOR AND CONTRACTOR. CERTIFIED WITH RESPECT TO BEARING, SLIDING, INTERNAL STABILITY AND OVERTURNING OF THE GRAVIX STRUCTURE ONLY.

COMMONWEALTH OF PENNSYLVANIA
DEPARTMENT OF TRANSPORTATION

DRAWING NUMBER # 2016-296

LEVELING UNIT

REINFORCEMENT LAYOUT - 1

LINE IS 2 INCHES AT FULL SIZE (IF NOT 2"—SCALE ACCORDINGLY)

DESIGNED TLR
DRAWN TDC
REVIEWED TLR

SHEET NUMBER
36 OF 52

THIS SHEET PLOTS ON 22" x 34" ANSI D

© Copyright 2018 by Earth Wall Products, LLC. All rights reserved. This document is the property of Earth Wall Products, LLC. It is to be used only for the specific project referred to or identified herein and is not to be used on other projects, in whole or in part, except by the express written agreement of Earth Wall Products, LLC.

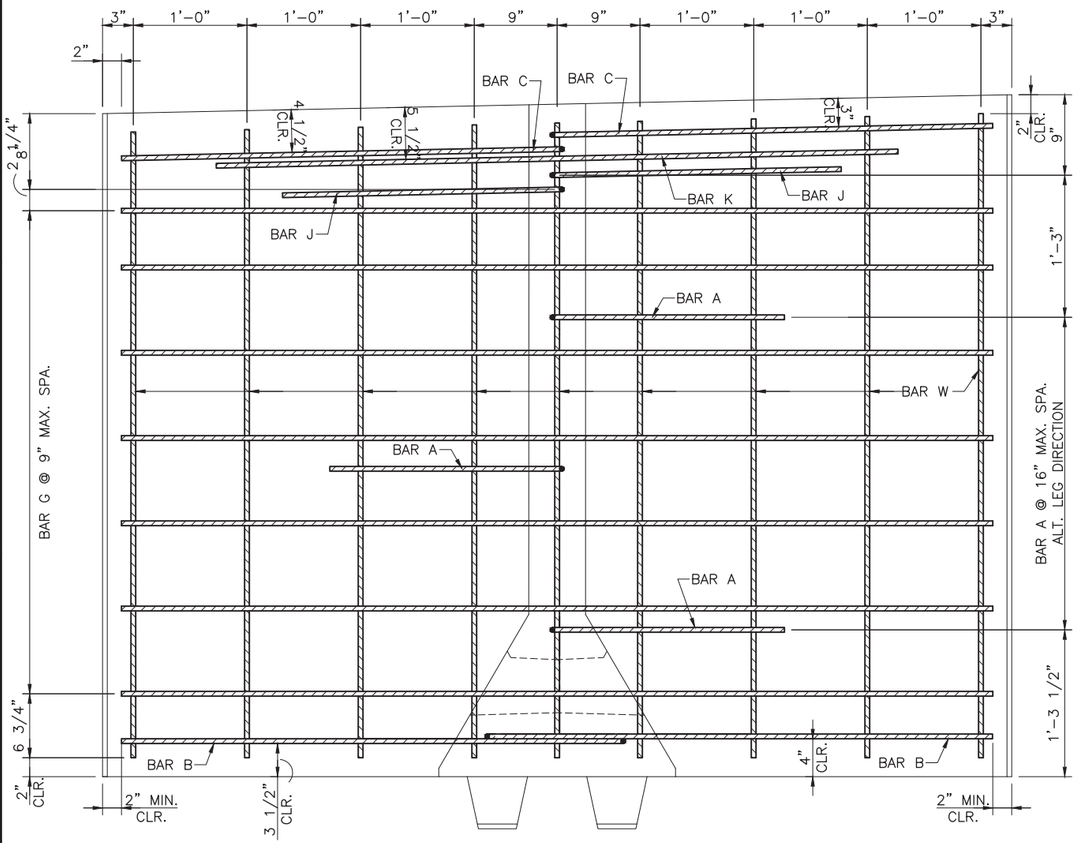

FRONT VIEW

0 6" 1 2 FT

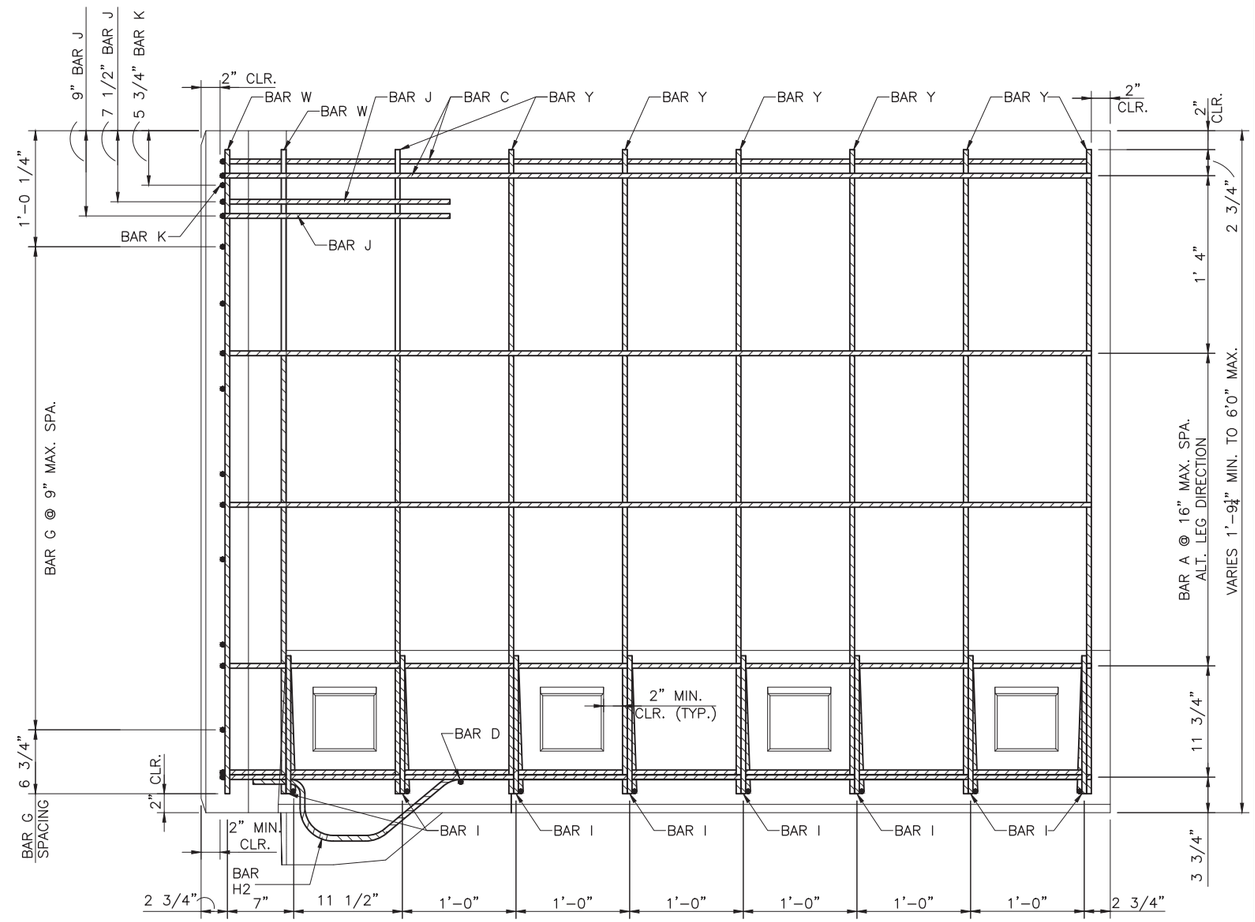

SIDE VIEW

0 6" 1 2 FT

12/13/2019

REVISIONS			
REV.	DESCRIPTION	BY	DATE
2	UPDATED PER REVIEW COMMENTS	TR	08/31/14
3	UPDATED PER REVIEW COMMENTS	TR	12/21/18
4	UPDATED PER REVIEW COMMENTS	TDC	7/9/19
5	UPDATED PER REVIEW COMMENTS	TDC	7/11/19
6	UPDATED PER REVIEW COMMENTS	TDC	9/27/19
7	UPDATED PER REVIEW COMMENTS	TDC	10/28/19

GRAVIX

PennDOT Precast Wall System

GRAVIX IS A LICENSED PRODUCT OF EARTH WALL PRODUCTS, LLC

I CERTIFY THAT ALL ASSUMPTIONS MADE IN DESIGNING THIS WALL HAVE BEEN VALIDATED THROUGH CONSTRUCTION DETAILS, SPECIAL NOTES AND / OR INSTRUCTIONS TO THE FABRICATOR, ERECTOR AND CONTRACTOR. CERTIFIED WITH RESPECT TO BEARING, SLIDING, INTERNAL STABILITY AND OVERTURNING OF THE GRAVIX STRUCTURE ONLY.

COMMONWEALTH OF PENNSYLVANIA
REGISTERED PROFESSIONAL
LANCE G. FRAMPTON
No. 044319
10/28/19

COMMONWEALTH OF PENNSYLVANIA
DEPARTMENT OF TRANSPORTATION

DRAWING NUMBER # 2016-296

LEVELING UNIT

REINFORCEMENT LAYOUT - 2

LINE IS 2 INCHES AT FULL SIZE (IF NOT 2"–SCALE ACCORDINGLY)

DESIGNED TLR
DRAWN TDC
REVIEWED TLR

SHEET NUMBER
37 OF 52

THIS SHEET PLOTS ON 22" x 34" ANSI D

© Copyright 2018 by Earth Wall Products, LLC. All rights reserved. This document is the property of Earth Wall Products, LLC. It is to be used only for the specific project referred to or identified herein and is not to be used on other projects, in whole or in part, except by the express written agreement of Earth Wall Products, LLC.

GRAVIX Precast Wall System (2019-10-28) REV.dwg
10/28/2019 12:06 PM

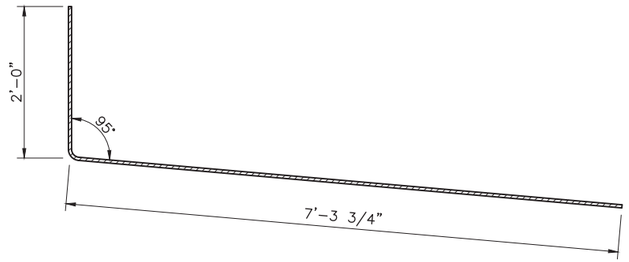

REINFORCEMENT BAR A
(VARIES BY HEIGHT) REQUIRED

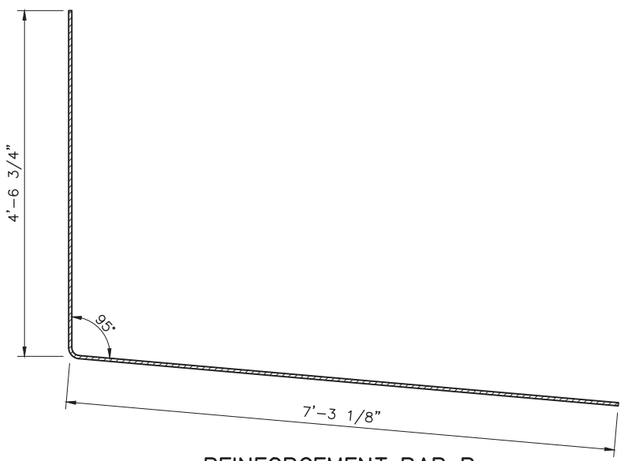

REINFORCEMENT BAR B
2 REQUIRED

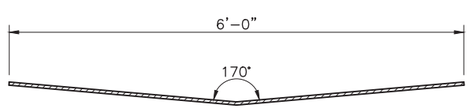

REINFORCEMENT BAR K
1 REQUIRED

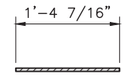

REINFORCEMENT BAR D
1 REQUIRED

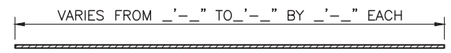

REINFORCEMENT BAR W
9 REQUIRED

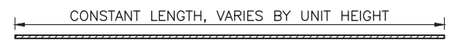

REINFORCEMENT BAR Y
7 REQUIRED

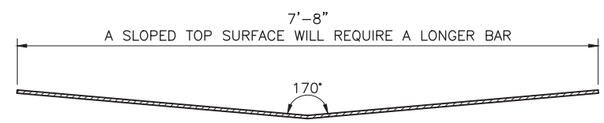

REINFORCEMENT BAR G
(VARIES BY HEIGHT) REQUIRED

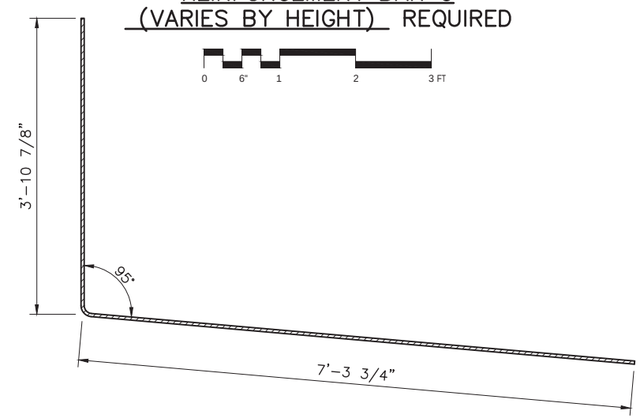

REINFORCEMENT BAR C
2 REQUIRED

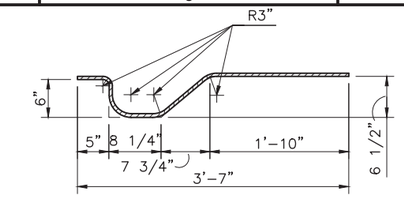

REINFORCEMENT BAR H2
2 REQUIRED

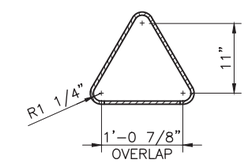

REINFORCEMENT BAR I
8 REQUIRED

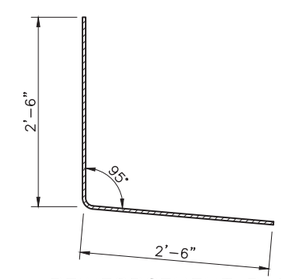

REINFORCEMENT BAR J
2 REQUIRED

REINFORCEMENT NOTES:
1. MINIMUM CLEARANCE TO EDGE – 2"
2. ALL STEEL REBAR TO BE #4

12/13/2019

REVISIONS			
REV.	DESCRIPTION	BY	DATE
2	UPDATED PER REVIEW COMMENTS	TR	08/31/14
3	UPDATED PER REVIEW COMMENTS	TR	12/21/18
4	UPDATED PER REVIEW COMMENTS	TDC	7/9/19
5	UPDATED PER REVIEW COMMENTS	TDC	7/11/19
6	UPDATED PER REVIEW COMMENTS	TDC	9/27/19
7	UPDATED PER REVIEW COMMENTS	TDC	10/28/19

GRAVIX
PennDOT Precast Wall System
GRAVIX IS A LICENSED PRODUCT OF EARTH WALL PRODUCTS, LLC

I CERTIFY THAT ALL ASSUMPTIONS MADE IN DESIGNING THIS WALL HAVE BEEN VALIDATED THROUGH CONSTRUCTION DETAILS, SPECIAL NOTES AND / OR INSTRUCTIONS TO THE FABRICATOR, ERECTOR AND CONTRACTOR. CERTIFIED WITH RESPECT TO BEARING, SLIDING, INTERNAL STABILITY AND OVERTURNING OF THE GRAVIX STRUCTURE ONLY.

COMMONWEALTH OF PENNSYLVANIA
REGISTERED PROFESSIONAL
LANCE G. GRASSO
ENGINEER
PENNSYLVANIA
10/28/19

COMMONWEALTH OF PENNSYLVANIA
DEPARTMENT OF TRANSPORTATION

DRAWING NUMBER # 2016-296

LEVELING UNIT

REBAR DETAILS

LINE IS 2 INCHES AT FULL SIZE (IF NOT 2"–SCALE ACCORDINGLY)

DESIGNED TLR
DRAWN TDC
REVIEWED TLR

SHEET NUMBER
38 OF 52

THIS SHEET PLOTS ON 22" x 34" ANSI D

© Copyright 2018 by Earth Wall Products, LLC. All rights reserved. This document is the property of Earth Wall Products, LLC. It is to be used only for the specific project referred to or identified herein and is not to be used on other projects, in whole or in part, except by the express written agreement of Earth Wall Products, LLC.

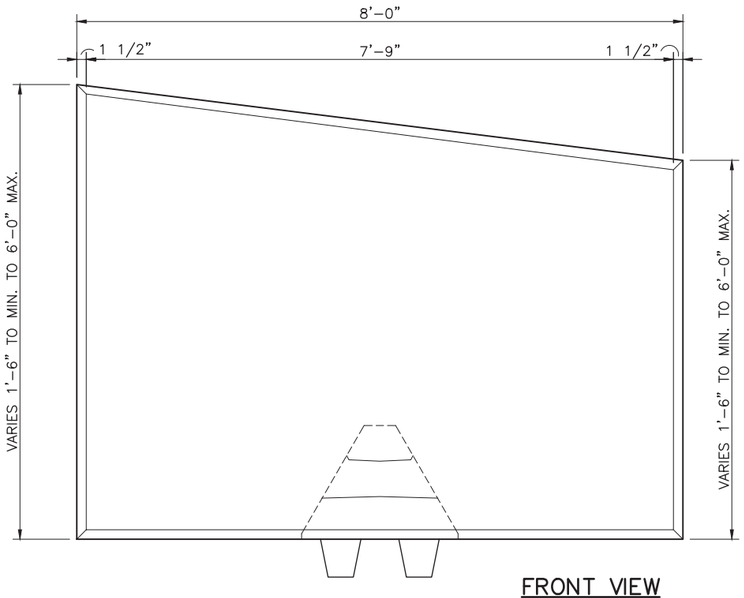

FRONT VIEW

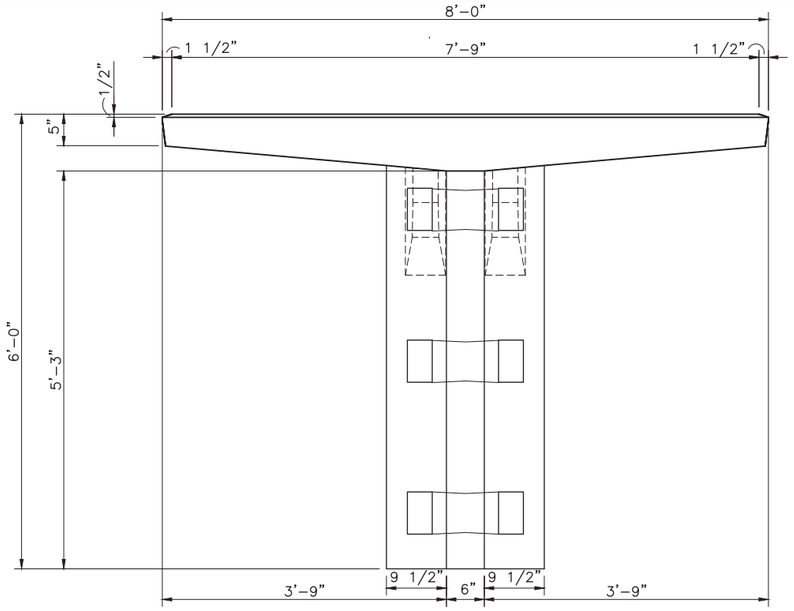

TOP VIEW

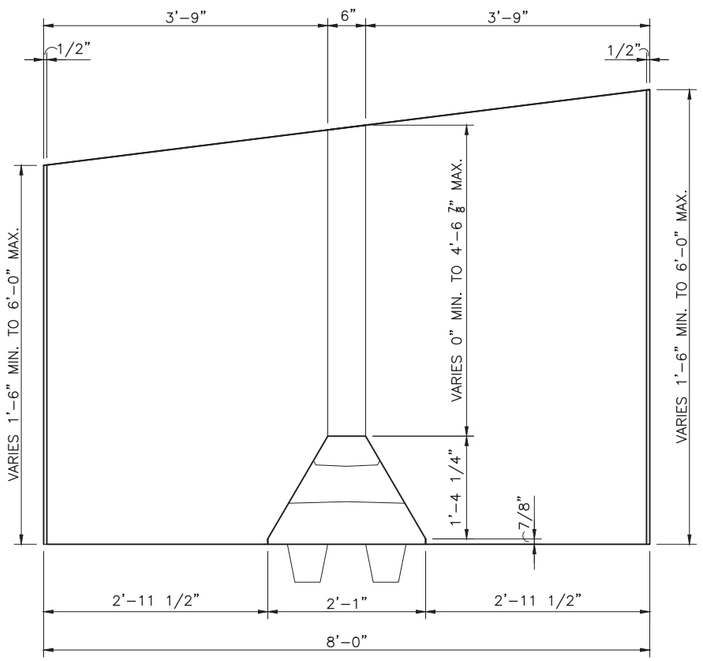

REAR VIEW

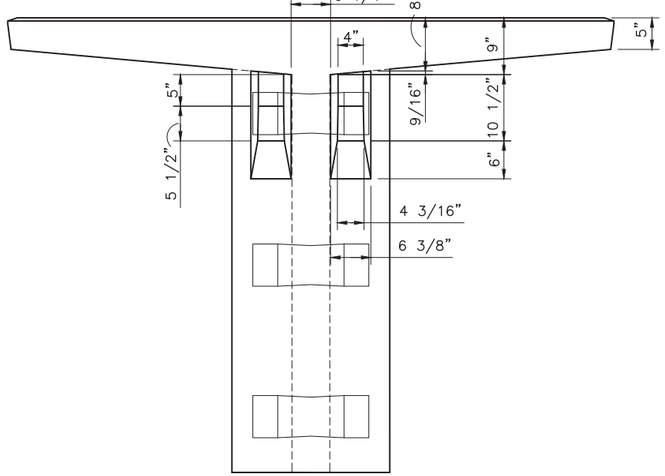

BOTTOM VIEW

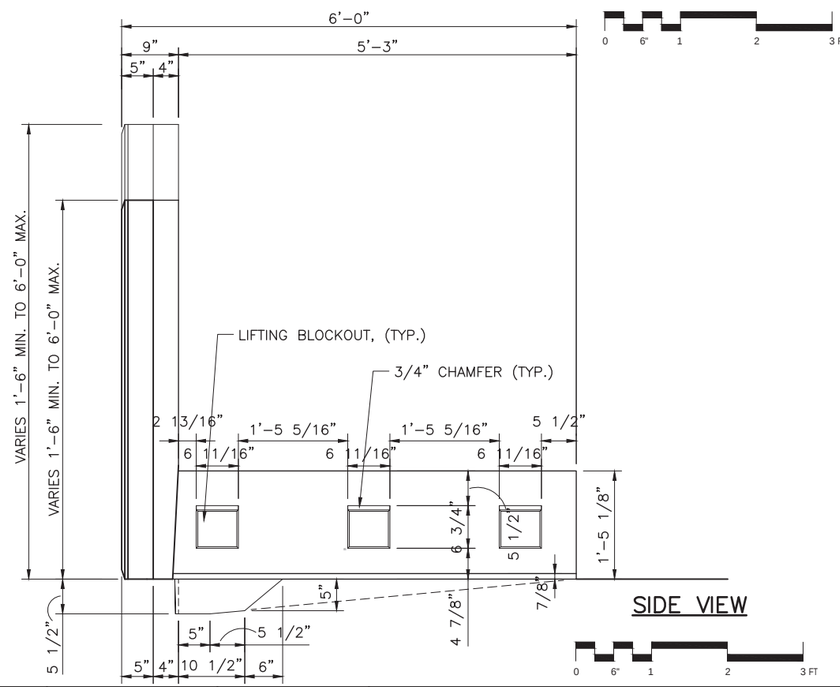

SIDE VIEW

NOTE:
THESE UNITS SHALL NOT BE USED BELOW 6' FROM TOP OF WALL

12/13/2019

REVISIONS

REV.	DESCRIPTION	BY	DATE
2	UPDATED PER REVIEW COMMENTS	TR	08/31/14
3	UPDATED PER REVIEW COMMENTS	TR	12/21/18
4	UPDATED PER REVIEW COMMENTS	TDC	7/9/19
5	UPDATED PER REVIEW COMMENTS	TDC	7/11/19
6	UPDATED PER REVIEW COMMENTS	TDC	9/27/19
7	UPDATED PER REVIEW COMMENTS	TDC	10/28/19

GRAVIX

PennDOT Precast Wall System

GRAVIX IS A LICENSED PRODUCT OF EARTH WALL PRODUCTS, LLC

I CERTIFY THAT ALL ASSUMPTIONS MADE IN DESIGNING THIS WALL HAVE BEEN VALIDATED THROUGH CONSTRUCTION DETAILS, SPECIAL NOTES AND / OR INSTRUCTIONS TO THE FABRICATOR, ERECTOR AND CONTRACTOR. CERTIFIED WITH RESPECT TO BEARING, SLIDING, INTERNAL STABILITY AND OVERTURNING OF THE GRAVIX STRUCTURE ONLY.

COMMONWEALTH OF PENNSYLVANIA
DEPARTMENT OF TRANSPORTATION

DRAWING NUMBER # 2016-296

TOP UNIT

DIMENSIONS

LINE IS 2 INCHES AT FULL SIZE (IF NOT 2"–SCALE ACCORDINGLY)

DESIGNED TLR
DRAWN TDC
REVIEWED TLR

SHEET NUMBER
39 OF 52

THIS SHEET PLOTS ON 22" x 34" ANSI D

© Copyright 2018 by Earth Wall Products, LLC. All rights reserved. This document is the property of Earth Wall Products, LLC. It is to be used only for the specific project referred to or identified herein and is not to be used on other projects, in whole or in part, except by the express written agreement of Earth Wall Products, LLC.

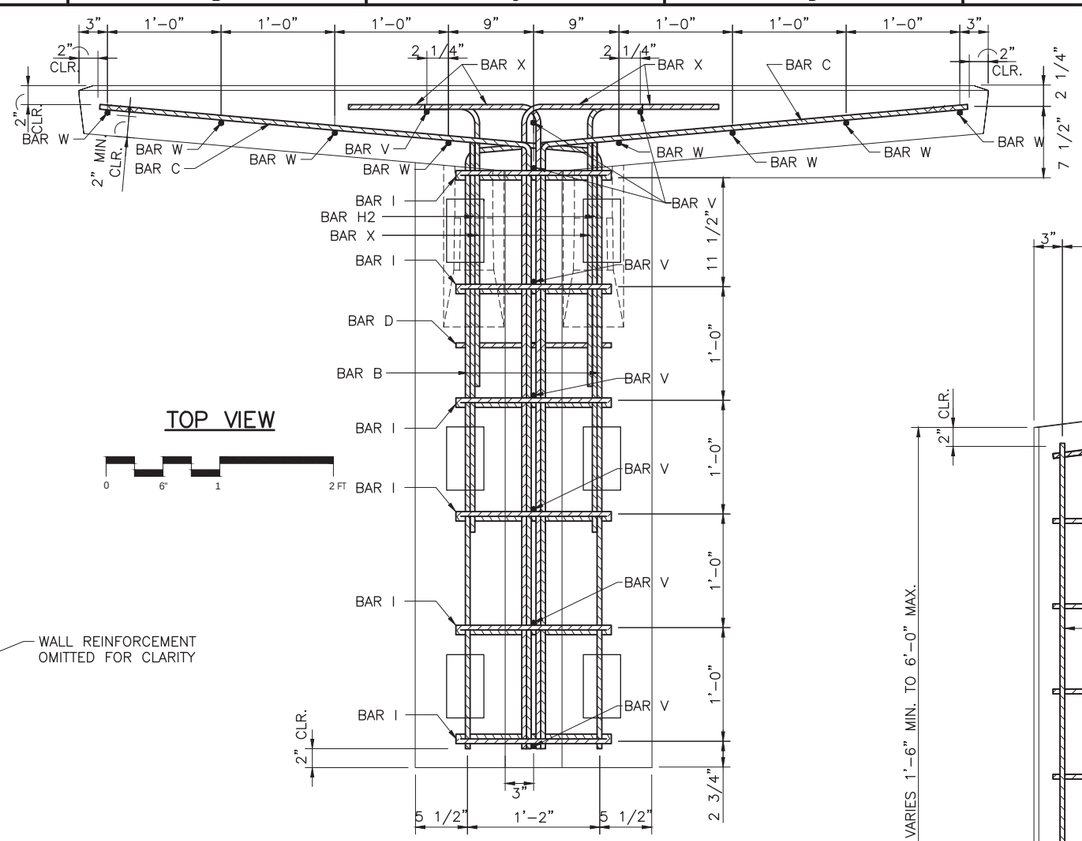

TOP VIEW

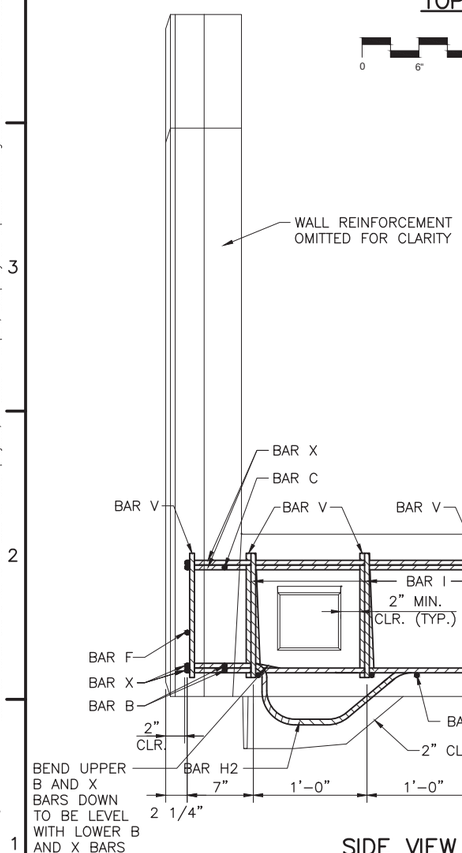

SIDE VIEW

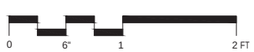

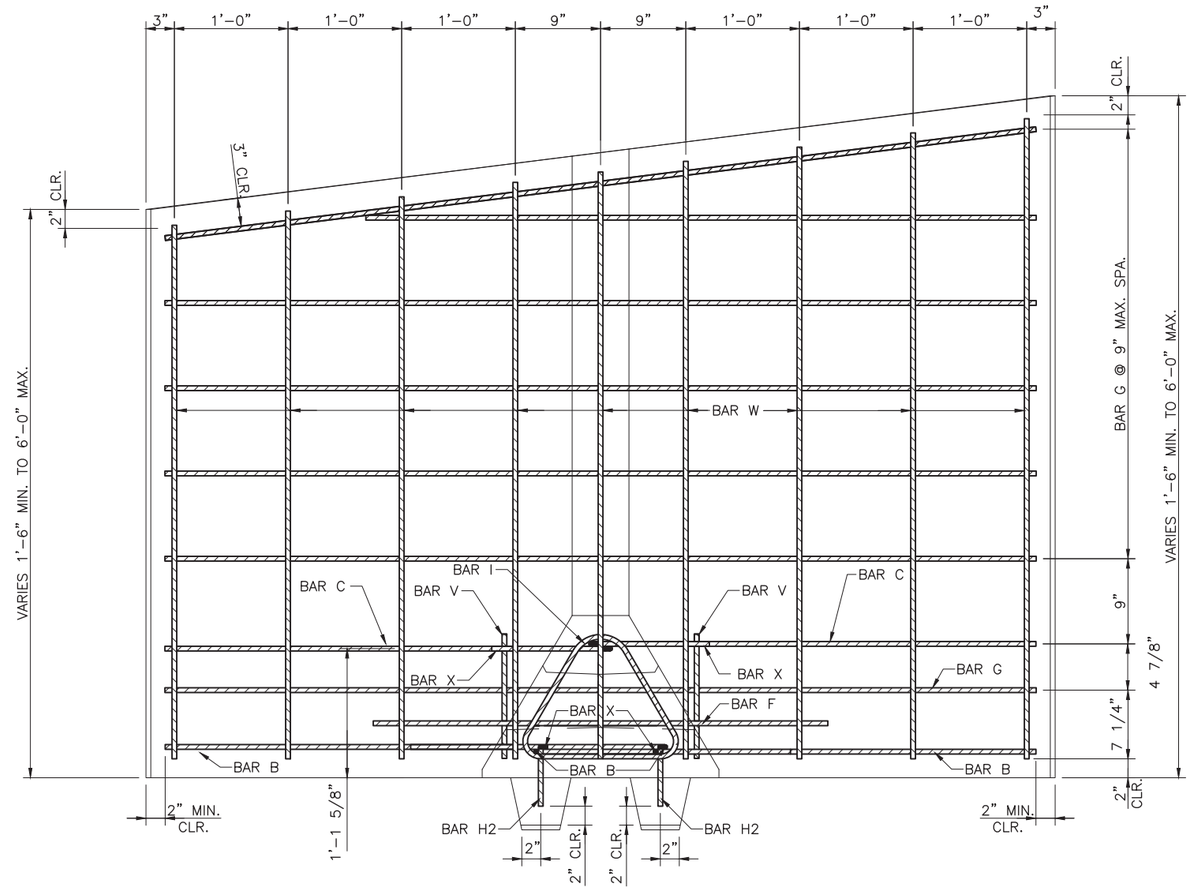

REAR VIEW

12/13/2019

REVISIONS			
REV.	DESCRIPTION	BY	DATE
2	UPDATED PER REVIEW COMMENTS	TR	08/31/14
3	UPDATED PER REVIEW COMMENTS	TR	12/21/18
4	UPDATED PER REVIEW COMMENTS	TDC	7/9/19
5	UPDATED PER REVIEW COMMENTS	TDC	7/11/19
6	UPDATED PER REVIEW COMMENTS	TDC	9/27/19
7	UPDATED PER REVIEW COMMENTS	TDC	10/28/19

GRAVIX

PennDOT Precast Wall System

GRAVIX IS A LICENSED PRODUCT OF EARTH WALL PRODUCTS, LLC

I CERTIFY THAT ALL ASSUMPTIONS MADE IN DESIGNING THIS WALL HAVE BEEN VALIDATED THROUGH CONSTRUCTION DETAILS, SPECIAL NOTES AND / OR INSTRUCTIONS TO THE FABRICATOR, ERECTOR AND CONTRACTOR. CERTIFIED WITH RESPECT TO BEARING, SLIDING, INTERNAL STABILITY AND OVERTURNING OF THE GRAVIX STRUCTURE ONLY.

COMMONWEALTH OF PENNSYLVANIA
PROFESSIONAL ENGINEER
LANCE G. PARADISO
PENNSYLVANIA
10/28/19

COMMONWEALTH OF PENNSYLVANIA
DEPARTMENT OF TRANSPORTATION

DRAWING NUMBER # 2016-296

TOP UNIT

REINFORCEMENT LAYOUT - 1

LINE IS 2 INCHES AT FULL SIZE (IF NOT 2"–SCALE ACCORDINGLY)

DESIGNED TLR
DRAWN TDC
REVIEWED TLR

SHEET NUMBER
40 OF 52

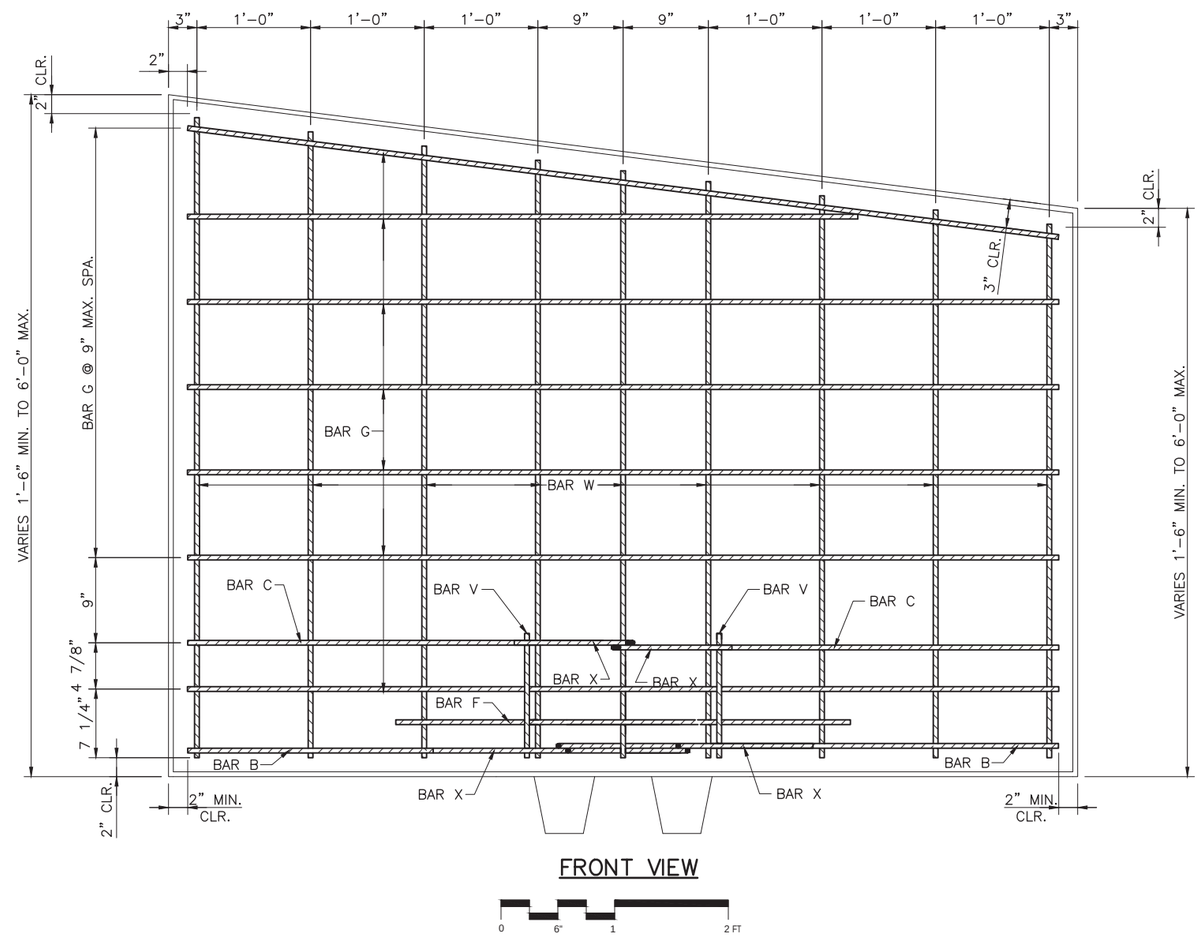

FRONT VIEW

0 6" 1 2 FT

12/13/2019

REVISIONS			
REV.	DESCRIPTION	BY	DATE
2	UPDATED PER REVIEW COMMENTS	TR	08/31/14
3	UPDATED PER REVIEW COMMENTS	TR	12/21/18
4	UPDATED PER REVIEW COMMENTS	TDC	7/9/19
5	UPDATED PER REVIEW COMMENTS	TDC	7/11/19
6	UPDATED PER REVIEW COMMENTS	TDC	9/27/19
7	UPDATED PER REVIEW COMMENTS	TDC	10/28/19

GRAVIX

PennDOT Precast Wall System

GRAVIX IS A LICENSED PRODUCT OF EARTH WALL PRODUCTS, LLC

I CERTIFY THAT ALL ASSUMPTIONS MADE IN DESIGNING THIS WALL HAVE BEEN VALIDATED THROUGH CONSTRUCTION DETAILS, SPECIAL NOTES AND / OR INSTRUCTIONS TO THE FABRICATOR, ERECTOR AND CONTRACTOR. CERTIFIED WITH RESPECT TO BEARING, SLIDING, INTERNAL STABILITY AND OVERTURNING OF THE GRAVIX STRUCTURE ONLY.

COMMONWEALTH OF PENNSYLVANIA
REGISTERED PROFESSIONAL
LANCE G. ALEXANDER
NO. 044316
PENNSYLVANIA
10/28/19

COMMONWEALTH OF PENNSYLVANIA
DEPARTMENT OF TRANSPORTATION

DRAWING NUMBER # 2016-296

TOP UNIT

REINFORCEMENT LAYOUT - 2

LINE IS 2 INCHES AT FULL SIZE (IF NOT 2"–SCALE ACCORDINGLY)

DESIGNED TLR
DRAWN TDC
REVIEWED TLR

SHEET NUMBER
41 OF 52

THIS SHEET PLOTS ON 22" x 34" ANSI D

© Copyright 2018 by Earth Wall Products, LLC. All rights reserved. This document is the property of Earth Wall Products, LLC. It is to be used only for the specific project referred to or identified herein and is not to be used on other projects, in whole or in part, except by the express written agreement of Earth Wall Products, LLC.

GRAVIX Precast Wall System (2019-10-28) REV.dwg
10/28/2019 12:07 PM

THIS SHEET PLOTS ON 22" x 34" ANSI D

© Copyright 2018 by Earth Wall Products, LLC. All rights reserved. This document is the property of Earth Wall Products, LLC. It is to be used only for the specific project referred to or identified herein and is not to be used on other projects, in whole or in part, except by the express written agreement of Earth Wall Products, LLC.

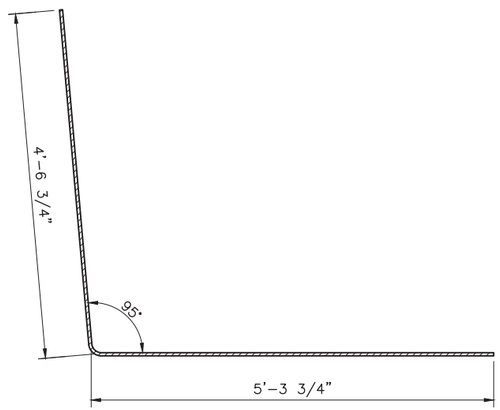

REINFORCEMENT BAR B
2 REQUIRED

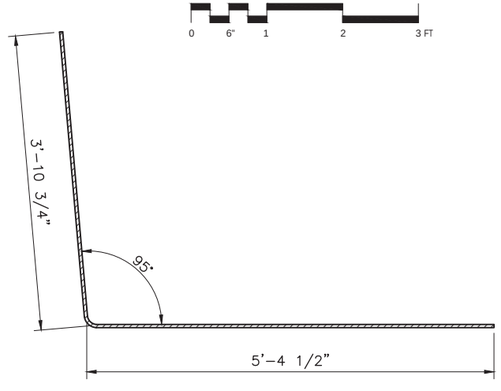

REINFORCEMENT BAR C
2 REQUIRED

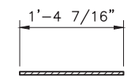

REINFORCEMENT BAR D
1 REQUIRED

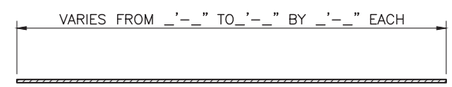

REINFORCEMENT BAR W
9 REQUIRED

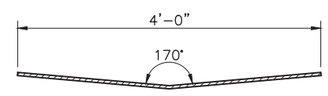

REINFORCEMENT BAR F
1 REQUIRED

A SLOPED TOP SURFACE WILL REQUIRE A LONGER BAR

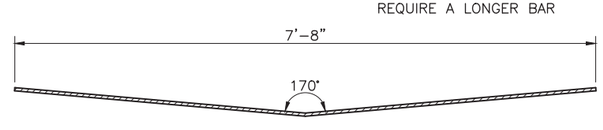

REINFORCEMENT BAR G
(VARIES BY HEIGHT) REQUIRED

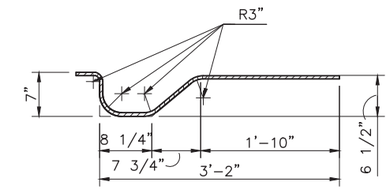

REINFORCEMENT BAR H2
2 REQUIRED

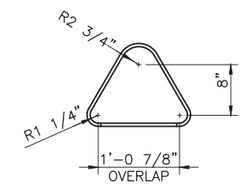

REINFORCEMENT BAR I
6 REQUIRED

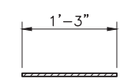

REINFORCEMENT BAR V
8 REQUIRED

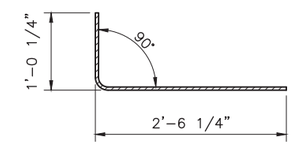

REINFORCEMENT BAR X
4 REQUIRED

REINFORCEMENT NOTES:
1. MINIMUM CLEARANCE TO EDGE – 2"
2. ALL STEEL REBAR TO BE #4

12/13/2019

REVISIONS

REV.	DESCRIPTION	BY	DATE
2	UPDATED PER REVIEW COMMENTS	TR	08/31/14
3	UPDATED PER REVIEW COMMENTS	TR	12/21/18
4	UPDATED PER REVIEW COMMENTS	TDC	7/9/19
5	UPDATED PER REVIEW COMMENTS	TDC	7/11/19
6	UPDATED PER REVIEW COMMENTS	TDC	9/27/19
7	UPDATED PER REVIEW COMMENTS	TDC	10/28/19

GRAVIX
PennDOT Precast Wall System
GRAVIX IS A LICENSED PRODUCT OF EARTH WALL PRODUCTS, LLC

I CERTIFY THAT ALL ASSUMPTIONS MADE IN DESIGNING THIS WALL HAVE BEEN VALIDATED THROUGH CONSTRUCTION DETAILS, SPECIAL NOTES AND / OR INSTRUCTIONS TO THE FABRICATOR, ERECTOR AND CONTRACTOR. CERTIFIED WITH RESPECT TO BEARING, SLIDING, INTERNAL STABILITY AND OVERTURNING OF THE GRAVIX STRUCTURE ONLY.

COMMONWEALTH OF PENNSYLVANIA
DEPARTMENT OF TRANSPORTATION

DRAWING NUMBER # 2016-296

TOP UNIT

REBAR DETAILS

LINE IS 2 INCHES AT FULL SIZE (IF NOT 2"–SCALE ACCORDINGLY)

DESIGNED TLR
DRAWN TDC
REVIEWED TLR

SHEET NUMBER
42 OF 52

THIS SHEET PLOTS ON 22" x 34" ANSI D

© Copyright 2018 by Earth Wall Products, LLC. All rights reserved. This document is the property of Earth Wall Products, LLC. It is to be used only for the specific project referred to or identified herein and is not to be used on other projects, in whole or in part, except by the express written agreement of Earth Wall Products, LLC.

NOTE:
NODE SIDE AND CHANNEL SIDE ARE INTERCHANGEABLE.

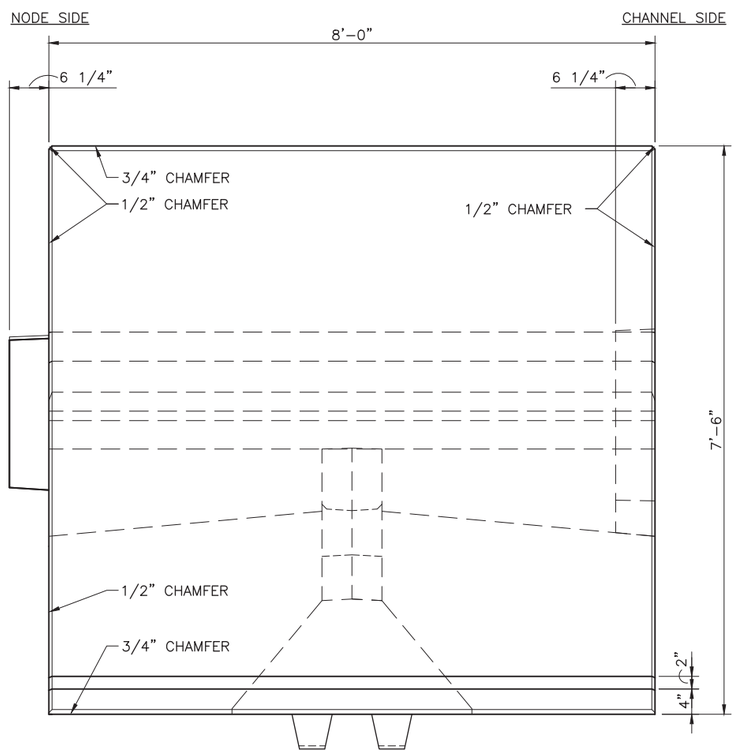

42" GRAVIX TRAFFIC BARRIER UNIT (FRONT VIEW)

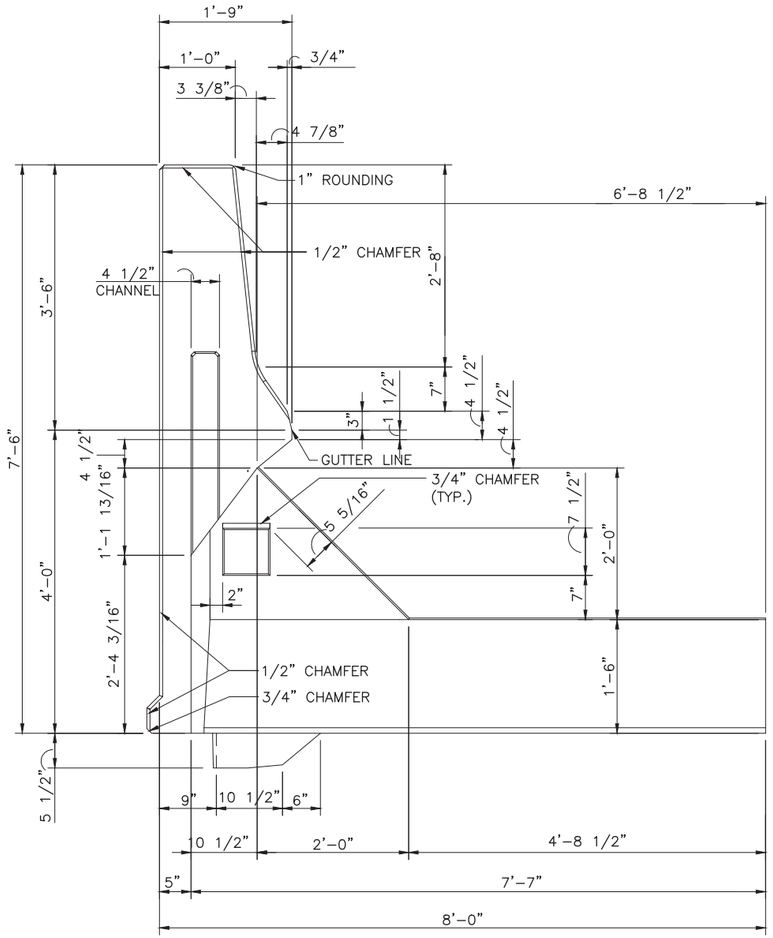

42" GRAVIX TRAFFIC BARRIER UNIT (SIDE VIEW)

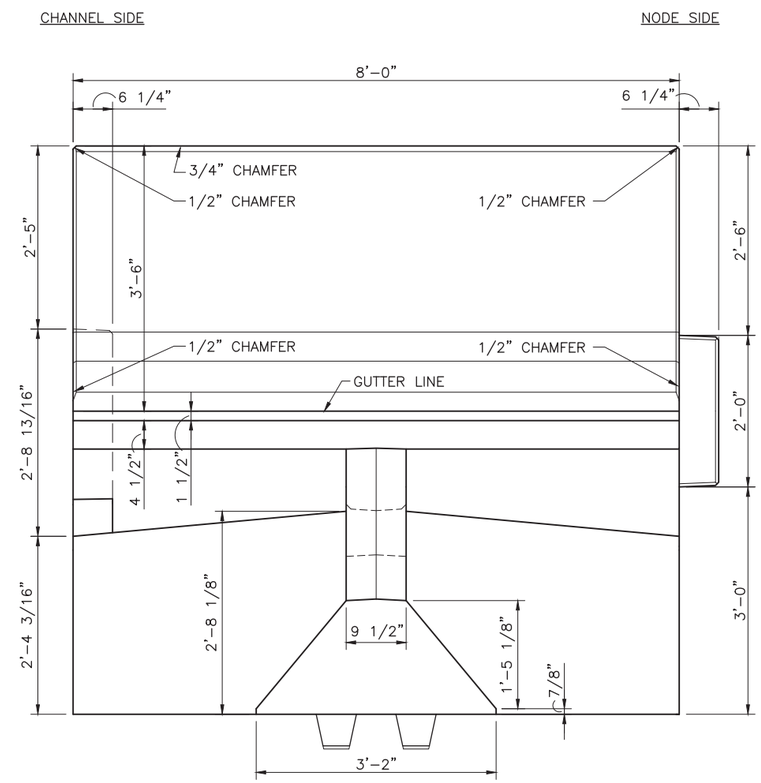

42" GRAVIX TRAFFIC BARRIER UNIT (REAR VIEW)

12/13/2019

REVISIONS

REV.	DESCRIPTION	BY	DATE
2	UPDATED PER REVIEW COMMENTS	TR	08/31/14
3	UPDATED PER REVIEW COMMENTS	TR	12/21/18
4	UPDATED PER REVIEW COMMENTS	TDC	7/9/19
5	UPDATED PER REVIEW COMMENTS	TDC	7/11/19
6	UPDATED PER REVIEW COMMENTS	TDC	9/27/19
7	UPDATED PER REVIEW COMMENTS	TDC	10/28/19

GRAVIX
PennDOT Precast Wall System
GRAVIX IS A LICENSED PRODUCT OF EARTH WALL PRODUCTS, LLC

I CERTIFY THAT ALL ASSUMPTIONS MADE IN DESIGNING THIS WALL HAVE BEEN VALIDATED THROUGH CONSTRUCTION DETAILS, SPECIAL NOTES AND / OR INSTRUCTIONS TO THE FABRICATOR, ERECTOR AND CONTRACTOR. CERTIFIED WITH RESPECT TO BEARING, SLIDING, INTERNAL STABILITY AND OVERTURNING OF THE GRAVIX STRUCTURE ONLY.

COMMONWEALTH OF PENNSYLVANIA
REGISTERED PROFESSIONAL ENGINEER
LANCE G. PARADISO
PE-075416
10/28/19

COMMONWEALTH OF PENNSYLVANIA
DEPARTMENT OF TRANSPORTATION

DRAWING NUMBER # 2016-296

42" GRAVIX TRAFFIC BARRIER UNIT

DIMENSIONS - 1

LINE IS 2 INCHES AT FULL SIZE (IF NOT 2"–SCALE ACCORDINGLY)

DESIGNED TLR
DRAWN TDC
REVIEWED TLR

SHEET NUMBER
43 OF 52

THIS SHEET PLOTS ON 22" x 34" ANSI D

© Copyright 2018 by Earth Wall Products, LLC. All rights reserved. This document is the property of Earth Wall Products, LLC. It is to be used only for the specific project referred to or identified herein and is not to be used on other projects, in whole or in part, except by the express written agreement of Earth Wall Products, LLC.

NOTE:
NODE SIDE AND CHANNEL SIDE ARE INTERCHANGEABLE.

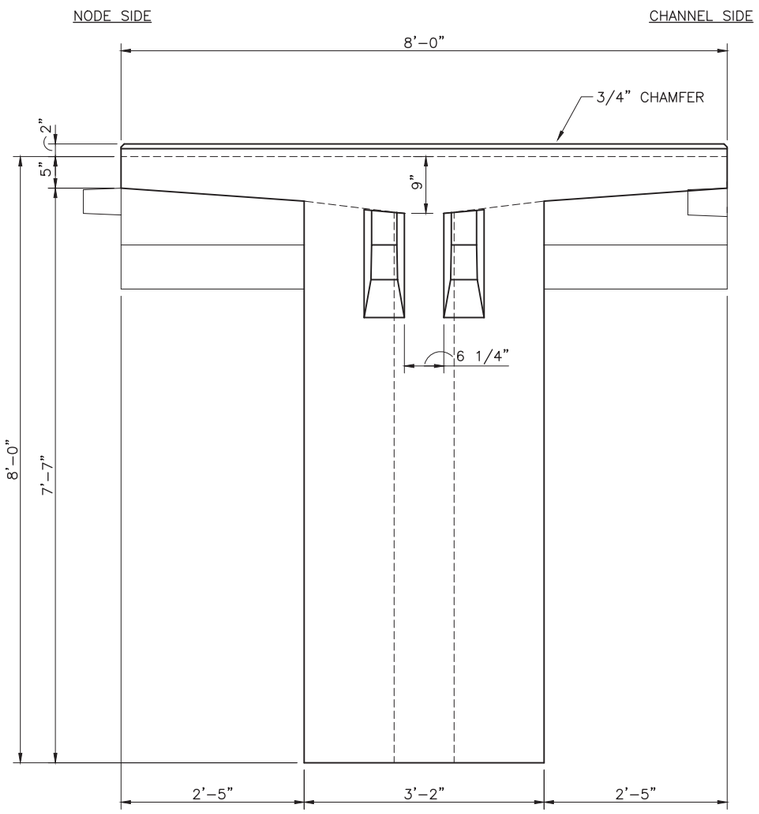

42" GRAVIX TRAFFIC BARRIER UNIT (BOTTOM VIEW)

0 6" 1 2 3 FT

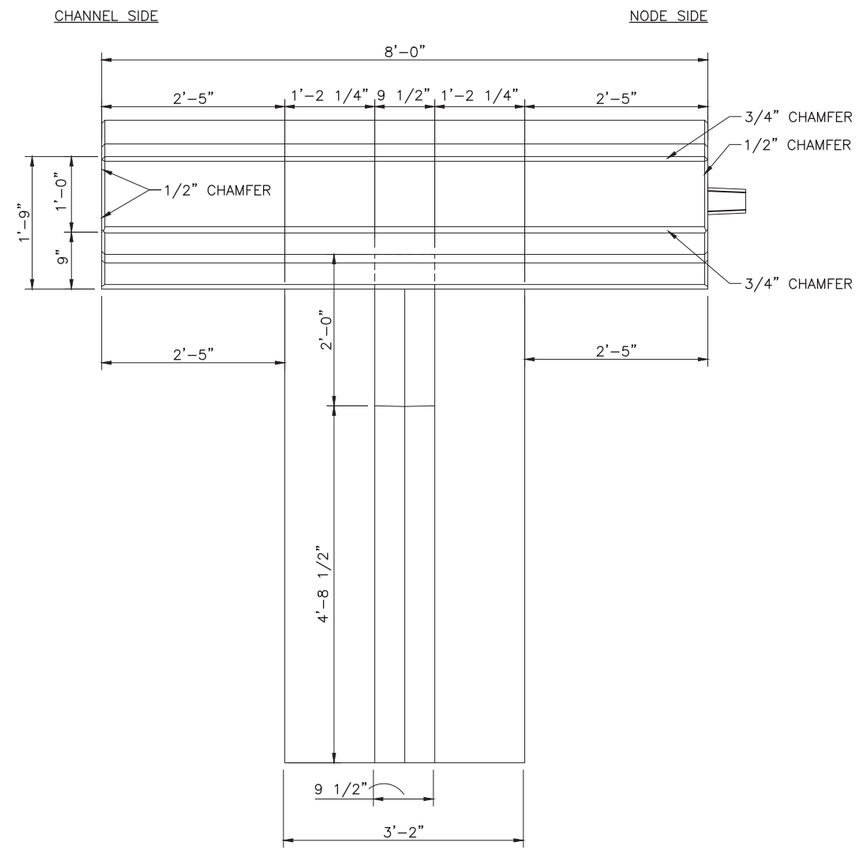

42" GRAVIX TRAFFIC BARRIER UNIT (TOP VIEW)

0 6" 1 2 3 FT

12/13/2019

REVISIONS

REV.	DESCRIPTION	BY	DATE
2	UPDATED PER REVIEW COMMENTS	TR	08/31/14
3	UPDATED PER REVIEW COMMENTS	TR	12/21/18
4	UPDATED PER REVIEW COMMENTS	TDC	7/9/19
5	UPDATED PER REVIEW COMMENTS	TDC	7/11/19
6	UPDATED PER REVIEW COMMENTS	TDC	9/27/19
7	UPDATED PER REVIEW COMMENTS	TDC	10/28/19

GRAVIX
PennDOT Precast Wall System
GRAVIX IS A LICENSED PRODUCT OF EARTH WALL PRODUCTS, LLC

I CERTIFY THAT ALL ASSUMPTIONS MADE IN DESIGNING THIS WALL HAVE BEEN VALIDATED THROUGH CONSTRUCTION DETAILS, SPECIAL NOTES AND / OR INSTRUCTIONS TO THE FABRICATOR, ERECTOR AND CONTRACTOR. CERTIFIED WITH RESPECT TO BEARING, SLIDING, INTERNAL STABILITY AND OVERTURNING OF THE GRAVIX STRUCTURE ONLY.

COMMONWEALTH OF PENNSYLVANIA REGISTERED PROFESSIONAL LANCE G. PATAVOS ENGINEER 10/28/19

COMMONWEALTH OF PENNSYLVANIA
DEPARTMENT OF TRANSPORTATION

DRAWING NUMBER # 2016-296

42" GRAVIX TRAFFIC BARRIER UNIT

DIMENSIONS - 2

LINE IS 2 INCHES AT FULL SIZE (IF NOT 2"-SCALE ACCORDINGLY)

DESIGNED TLR
DRAWN TDC
REVIEWED TLR

SHEET NUMBER
44 OF 52

GRAVIX Precast Wall System (2019-10-28) REV.dwg
10/28/2019 12:07 PM

THIS SHEET PLOTS ON 22" x 34" ANSI D

© Copyright 2018 by Earth Wall Products, LLC. All rights reserved. This document is the property of Earth Wall Products, LLC. It is to be used only for the specific project referred to or identified herein and is not to be used on other projects, in whole or in part, except by the express written agreement of Earth Wall Products, LLC.

NOTE:
NODE SIDE AND CHANNEL SIDE ARE INTERCHANGEABLE.

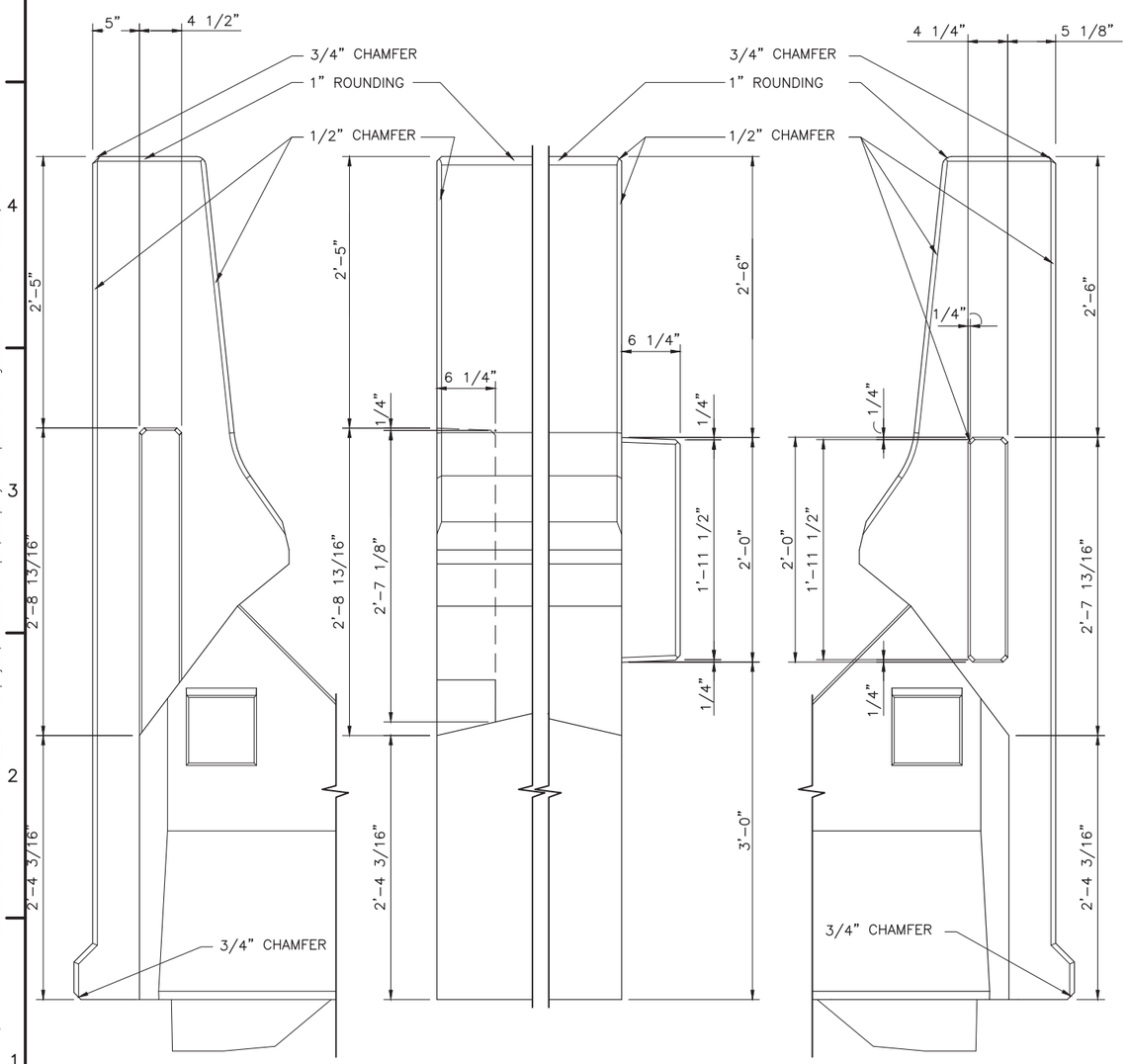

CHANNEL SIDE VIEW

0 6" 1 2 FT

NODE SIDE VIEW

0 6" 1 2 FT

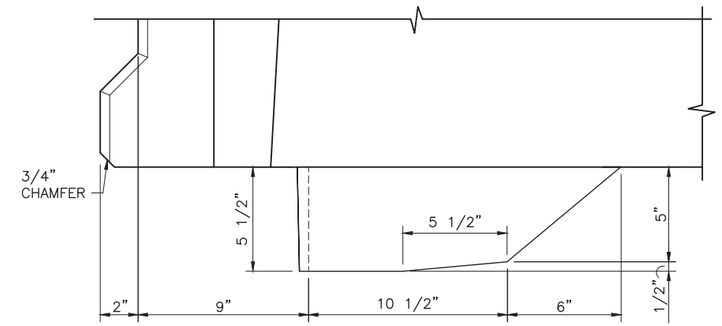

ENLARGED DETAIL (SIDE VIEW)

0 3 6 9 12 IN

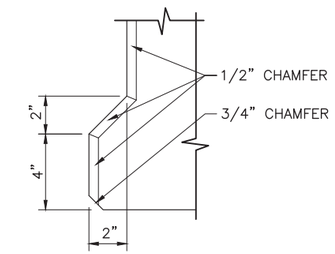

ENLARGED FRONT NOSING

0 3 6 9 12 IN

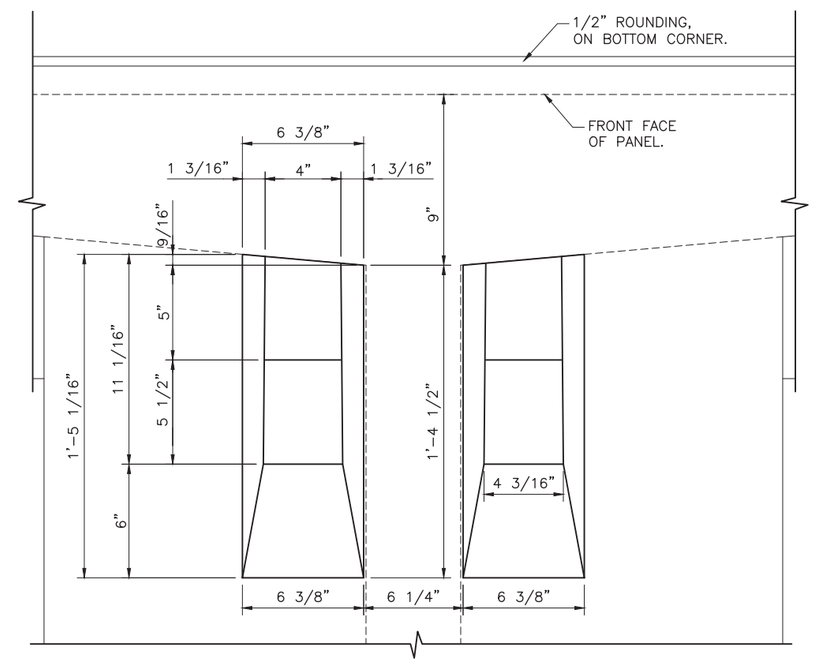

ENLARGED DETAIL (BOTTOM VIEW)

0 3 6 9 12 IN

12/13/2019

REVISIONS

REV.	DESCRIPTION	BY	DATE
2	UPDATED PER REVIEW COMMENTS	TR	08/31/14
3	UPDATED PER REVIEW COMMENTS	TR	12/21/18
4	UPDATED PER REVIEW COMMENTS	TDC	7/9/19
5	UPDATED PER REVIEW COMMENTS	TDC	7/11/19
6	UPDATED PER REVIEW COMMENTS	TDC	9/27/19
7	UPDATED PER REVIEW COMMENTS	TDC	10/28/19

GRAVIX
PennDOT Precast Wall System
GRAVIX IS A LICENSED PRODUCT OF EARTH WALL PRODUCTS, LLC

I CERTIFY THAT ALL ASSUMPTIONS MADE IN DESIGNING THIS WALL HAVE BEEN VALIDATED THROUGH CONSTRUCTION DETAILS, SPECIAL NOTES AND / OR INSTRUCTIONS TO THE FABRICATOR, ERECTOR AND CONTRACTOR. CERTIFIED WITH RESPECT TO BEARING, SLIDING, INTERNAL STABILITY AND OVERTURNING OF THE GRAVIX STRUCTURE ONLY.

COMMONWEALTH OF PENNSYLVANIA
DEPARTMENT OF TRANSPORTATION

DRAWING NUMBER # 2016-296

42" GRAVIX TRAFFIC BARRIER UNIT

DIMENSIONS - 3

LINE IS 2 INCHES AT FULL SIZE (IF NOT 2"–SCALE ACCORDINGLY)

DESIGNED TLR
DRAWN TDC
REVIEWED TLR

SHEET NUMBER
45 OF 52

THIS SHEET PLOTS ON 22" x 34" ANSI D

© Copyright 2018 by Earth Wall Products, LLC. All rights reserved. This document is the property of Earth Wall Products, LLC. It is to be used only for the specific project referred to or identified herein and is not to be used on other projects, in whole or in part, except by the express written agreement of Earth Wall Products, LLC.

GRAVIX Precast Wall System (2019-10-28) REV.dwg
10/28/2019 12:07 PM

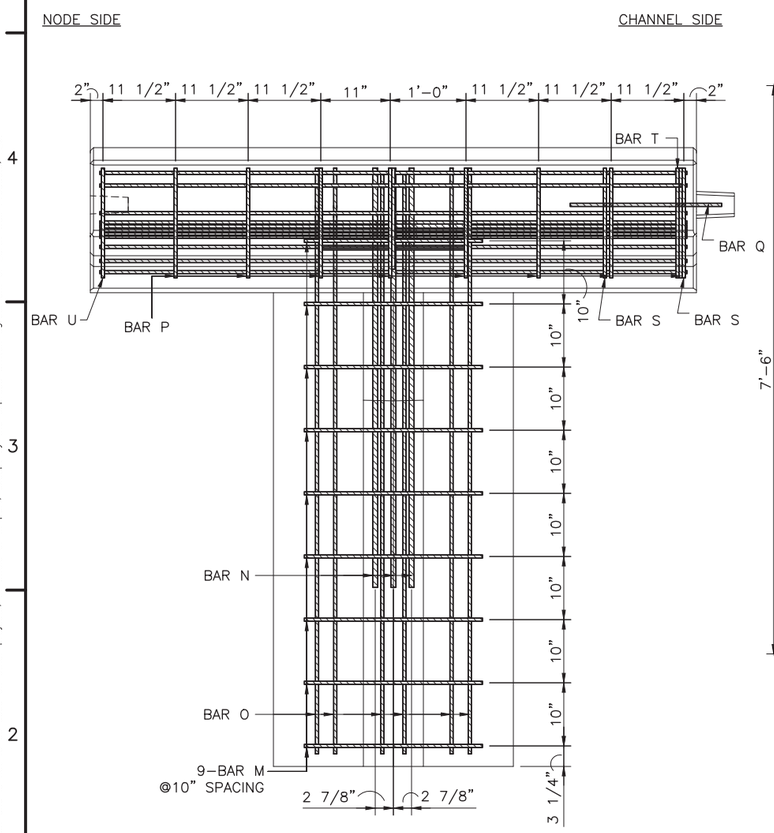

42" GRAVIX TRAFFIC BARRIER UNIT (TOP VIEW)

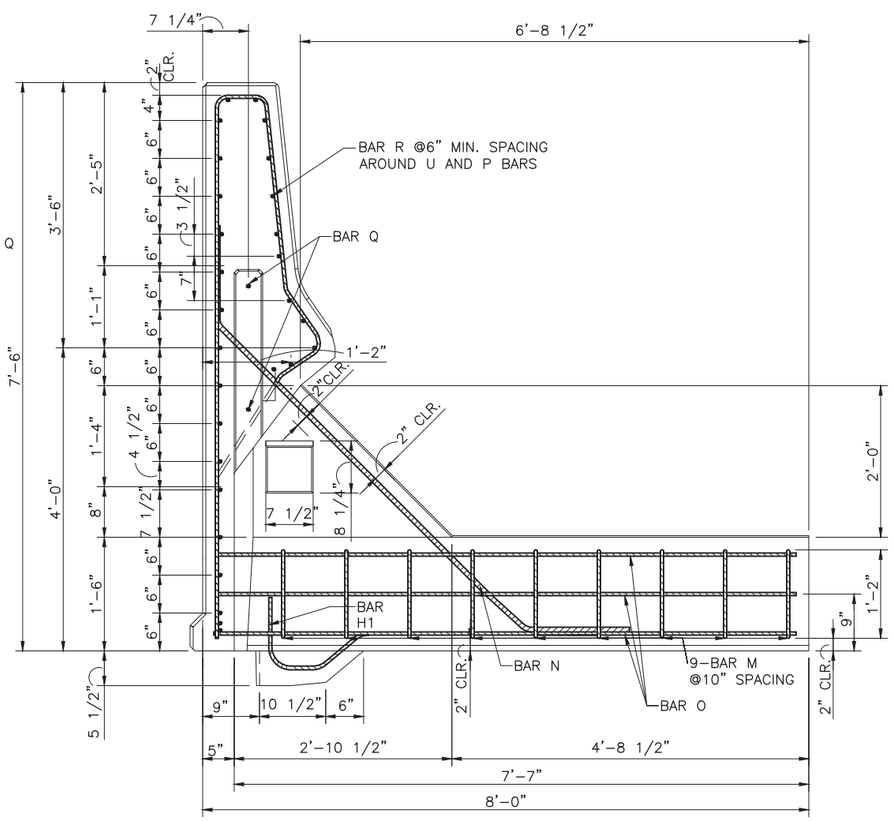

42" GRAVIX TRAFFIC BARRIER UNIT (SIDE VIEW)

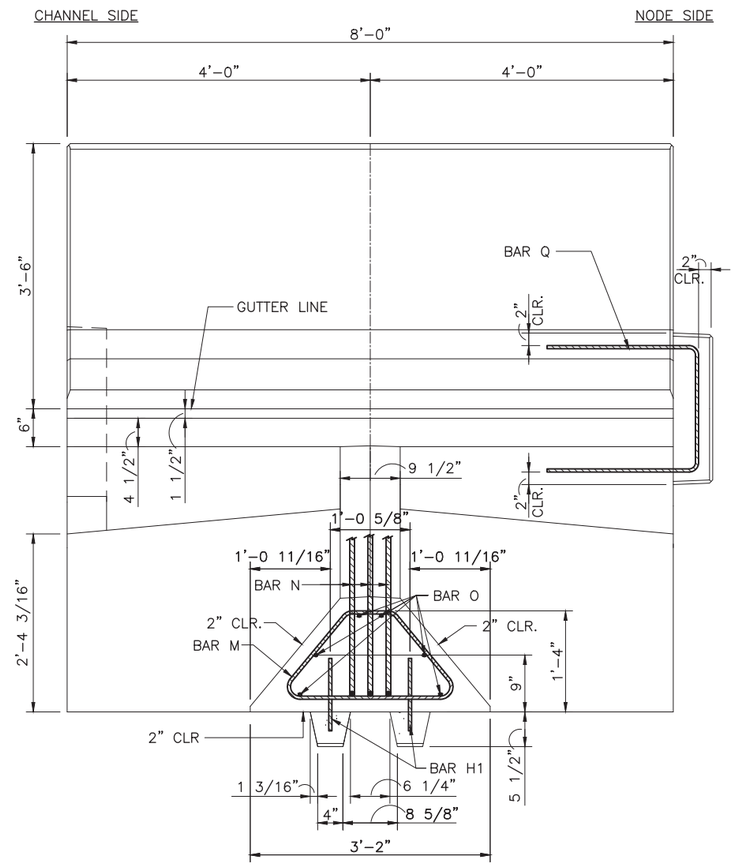

42" GRAVIX TRAFFIC BARRIER UNIT (REAR VIEW)

12/13/2019

REVISIONS			
REV.	DESCRIPTION	BY	DATE
2	UPDATED PER REVIEW COMMENTS	TR	08/31/14
3	UPDATED PER REVIEW COMMENTS	TR	12/21/18
4	UPDATED PER REVIEW COMMENTS	TDC	7/9/19
5	UPDATED PER REVIEW COMMENTS	TDC	7/11/19
6	UPDATED PER REVIEW COMMENTS	TDC	9/27/19
7	UPDATED PER REVIEW COMMENTS	TDC	10/28/19

GRAVIX
PennDOT Precast Wall System
GRAVIX IS A LICENSED PRODUCT OF EARTH WALL PRODUCTS, LLC

I CERTIFY THAT ALL ASSUMPTIONS MADE IN DESIGNING THIS WALL HAVE BEEN VALIDATED THROUGH CONSTRUCTION DETAILS, SPECIAL NOTES AND / OR INSTRUCTIONS TO THE FABRICATOR, ERECTOR AND CONTRACTOR. CERTIFIED WITH RESPECT TO BEARING, SLIDING, INTERNAL STABILITY AND OVERTURNING OF THE GRAVIX STRUCTURE ONLY.

COMMONWEALTH OF PENNSYLVANIA
DEPARTMENT OF TRANSPORTATION

DRAWING NUMBER # 2016-296

42" GRAVIX TRAFFIC BARRIER UNIT

REINFORCEMENT LAYOUT

LINE IS 2 INCHES AT FULL SIZE (IF NOT 2"–SCALE ACCORDINGLY)

DESIGNED TLR
DRAWN TDC
REVIEWED TLR

SHEET NUMBER
46 OF 52

THIS SHEET PLOTS ON 22" x 34" ANSI D

© Copyright 2018 by Earth Wall Products, LLC. All rights reserved. This document is the property of Earth Wall Products, LLC. It is to be used only for the specific project referred to or identified herein and is not to be used on other projects, in whole or in part, except by the express written agreement of Earth Wall Products, LLC.

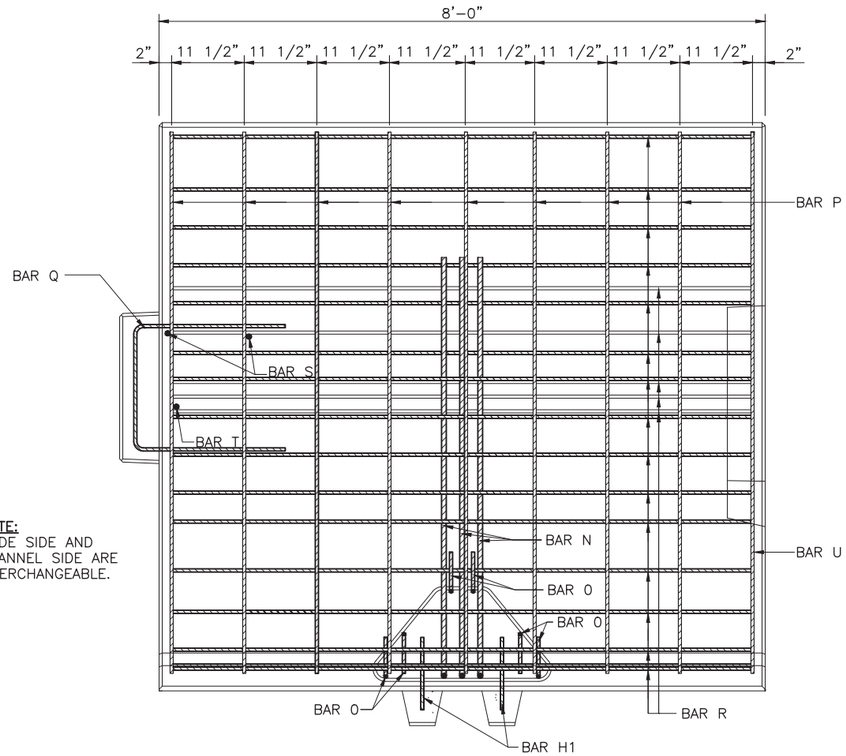

NOTE:
NODE SIDE AND CHANNEL SIDE ARE INTERCHANGEABLE.

42" GRAVIX TRAFFIC BARRIER UNIT (FRONT VIEW)

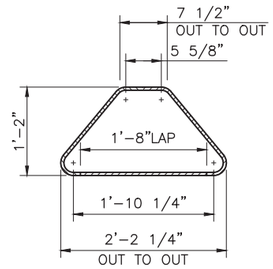

M BAR – #4 STIRRUP
9 REQUIRED

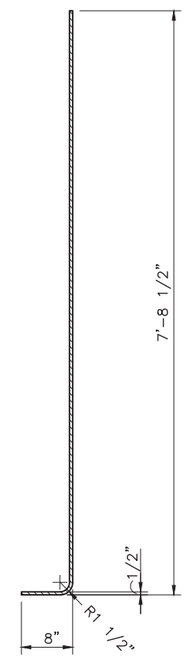

O BAR – #4 STEM BAR
6 REQUIRED

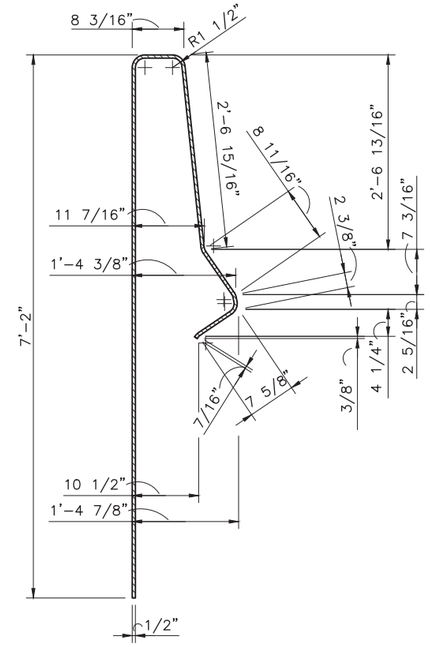

U BAR – #4 WALL BAR
1 REQUIRED

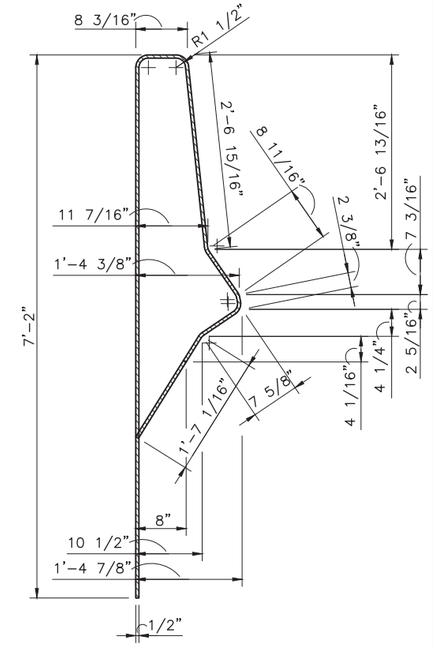

P BAR – #4 WALL BAR
8 REQUIRED

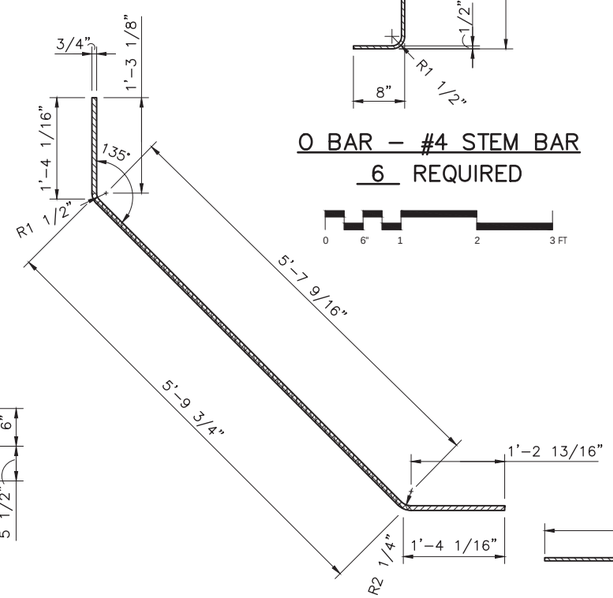

N BAR – #6 RIB BAR
3 REQUIRED

NOTE:
USE ONLY EPOXY COATED REINFORCEMENT IN GRAVIX TRAFFIC BARRIER UNIT.

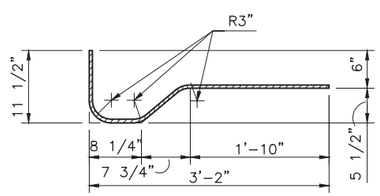

S BAR
2 REQUIRED

T BAR
1 REQUIRED

H1 BAR
2 REQUIRED

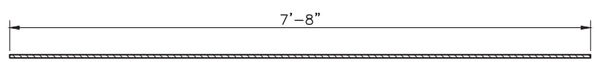

R BAR – #4 WALL BAR
25 REQUIRED

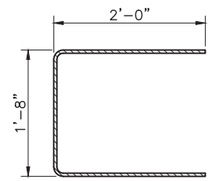

Q BAR – #4 NODE BAR
1 REQUIRED

12/13/2019

REVISIONS

REV.	DESCRIPTION	BY	DATE
2	UPDATED PER REVIEW COMMENTS	TR	08/31/14
3	UPDATED PER REVIEW COMMENTS	TR	12/21/18
4	UPDATED PER REVIEW COMMENTS	TDC	7/9/19
5	UPDATED PER REVIEW COMMENTS	TDC	7/11/19
6	UPDATED PER REVIEW COMMENTS	TDC	9/27/19
7	UPDATED PER REVIEW COMMENTS	TDC	10/28/19

GRAVIX
PennDOT Precast Wall System
GRAVIX IS A LICENSED PRODUCT OF EARTH WALL PRODUCTS, LLC

I CERTIFY THAT ALL ASSUMPTIONS MADE IN DESIGNING THIS WALL HAVE BEEN VALIDATED THROUGH CONSTRUCTION DETAILS, SPECIAL NOTES AND / OR INSTRUCTIONS TO THE FABRICATOR, ERECTOR AND CONTRACTOR. CERTIFIED WITH RESPECT TO BEARING, SLIDING, INTERNAL STABILITY AND OVERTURNING OF THE GRAVIX STRUCTURE ONLY.

COMMONWEALTH OF PENNSYLVANIA
DEPARTMENT OF TRANSPORTATION

DRAWING NUMBER # 2016-296

42" GRAVIX TRAFFIC BARRIER UNIT

REBAR DETAILS

LINE IS 2 INCHES AT FULL SIZE (IF NOT 2"–SCALE ACCORDINGLY)

DESIGNED TLR
DRAWN TDC
REVIEWED TLR

SHEET NUMBER
47 OF 52

THIS SHEET PLOTS ON 22" x 34" ANSI D

© Copyright 2018 by Earth Wall Products, LLC. All rights reserved. This document is the property of Earth Wall Products, LLC. It is to be used only for the specific project referred to or identified herein and is not to be used on other projects, in whole or in part, except by the express written agreement of Earth Wall Products, LLC.

GRAVIX Precast Wall System (2019-10-28) REV.dwg
10/28/2019 12:07 PM

NOTE:
NODE SIDE AND CHANNEL SIDE ARE INTERCHANGEABLE.

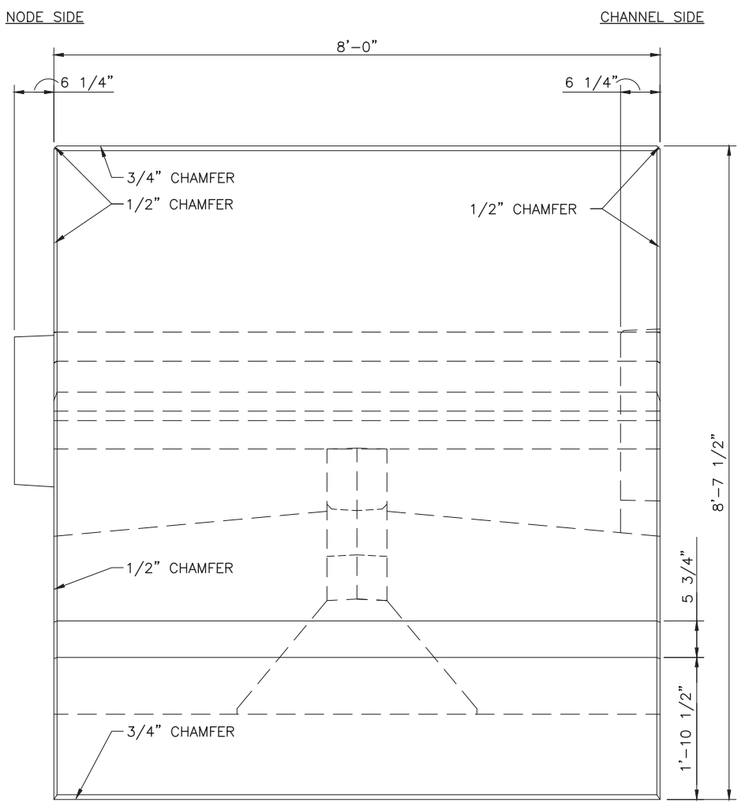

42" GRAVIX MSE TRAFFIC BARRIER UNIT (FRONT VIEW)

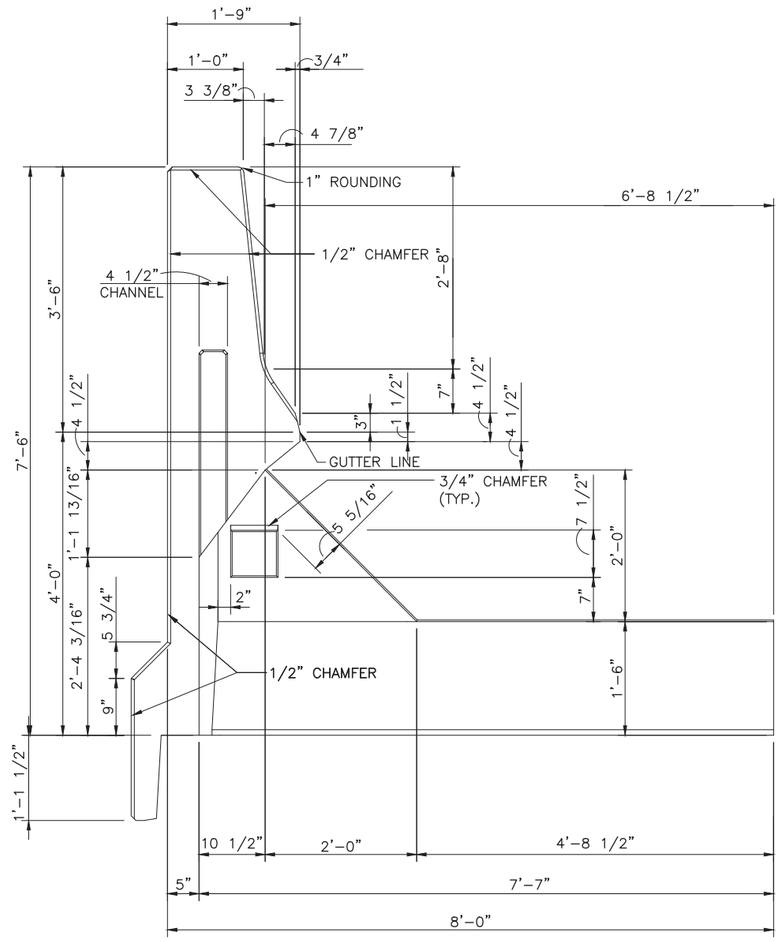

42" GRAVIX MSE TRAFFIC BARRIER UNIT (SIDE VIEW)

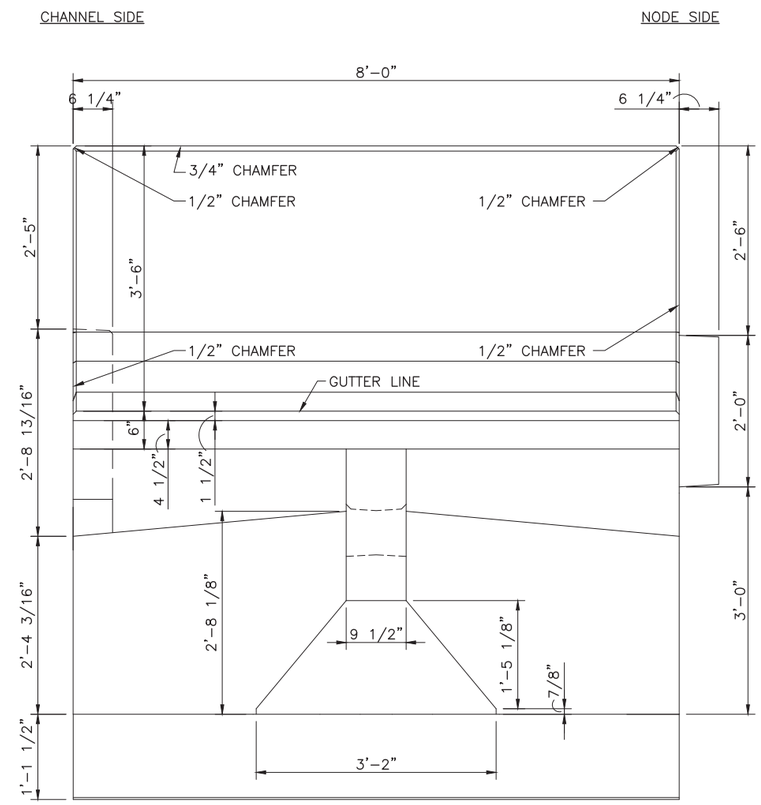

42" GRAVIX MSE TRAFFIC BARRIER UNIT (REAR VIEW)

12/13/2019

REVISIONS			
REV.	DESCRIPTION	BY	DATE
2	UPDATED PER REVIEW COMMENTS	TR	08/31/14
3	UPDATED PER REVIEW COMMENTS	TR	12/21/18
4	UPDATED PER REVIEW COMMENTS	TDC	7/9/19
5	UPDATED PER REVIEW COMMENTS	TDC	7/11/19
6	UPDATED PER REVIEW COMMENTS	TDC	9/27/19
7	UPDATED PER REVIEW COMMENTS	TDC	10/28/19

GRAVIX
PennDOT Precast Wall System
GRAVIX IS A LICENSED PRODUCT OF EARTH WALL PRODUCTS, LLC

I CERTIFY THAT ALL ASSUMPTIONS MADE IN DESIGNING THIS WALL HAVE BEEN VALIDATED THROUGH CONSTRUCTION DETAILS, SPECIAL NOTES AND / OR INSTRUCTIONS TO THE FABRICATOR, ERECTOR AND CONTRACTOR. CERTIFIED WITH RESPECT TO BEARING, SLIDING, INTERNAL STABILITY AND OVERTURNING OF THE GRAVIX STRUCTURE ONLY.

COMMONWEALTH OF PENNSYLVANIA
DEPARTMENT OF TRANSPORTATION

DRAWING NUMBER # 2016-296

42" GRAVIX MSE TRAFFIC BARRIER UNIT

DIMENSIONS - 1

LINE IS 2 INCHES AT FULL SIZE (IF NOT 2"–SCALE ACCORDINGLY)

DESIGNED TLR
DRAWN TDC
REVIEWED TLR

SHEET NUMBER
48 OF 52

THIS SHEET PLOTS ON 22" x 34" ANSI D

© Copyright 2018 by Earth Wall Products, LLC. All rights reserved. This document is the property of Earth Wall Products, LLC. It is to be used only for the specific project referred to or identified herein and is not to be used on other projects, in whole or in part, except by the express written agreement of Earth Wall Products, LLC.

GRAVIX Precast Wall System (2019-10-28) REV.dwg
10/28/2019 12:07 PM

NOTE:
NODE SIDE AND CHANNEL SIDE ARE INTERCHANGEABLE.

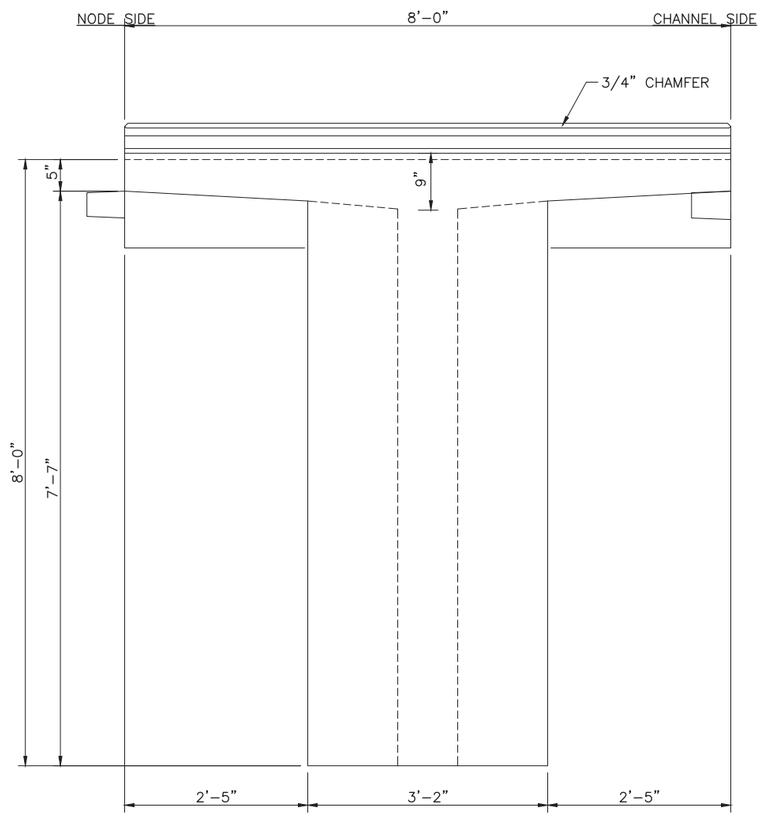

42" GRAVIX MSE TRAFFIC BARRIER UNIT (BOTTOM VIEW)

0 6" 1 2 3 FT

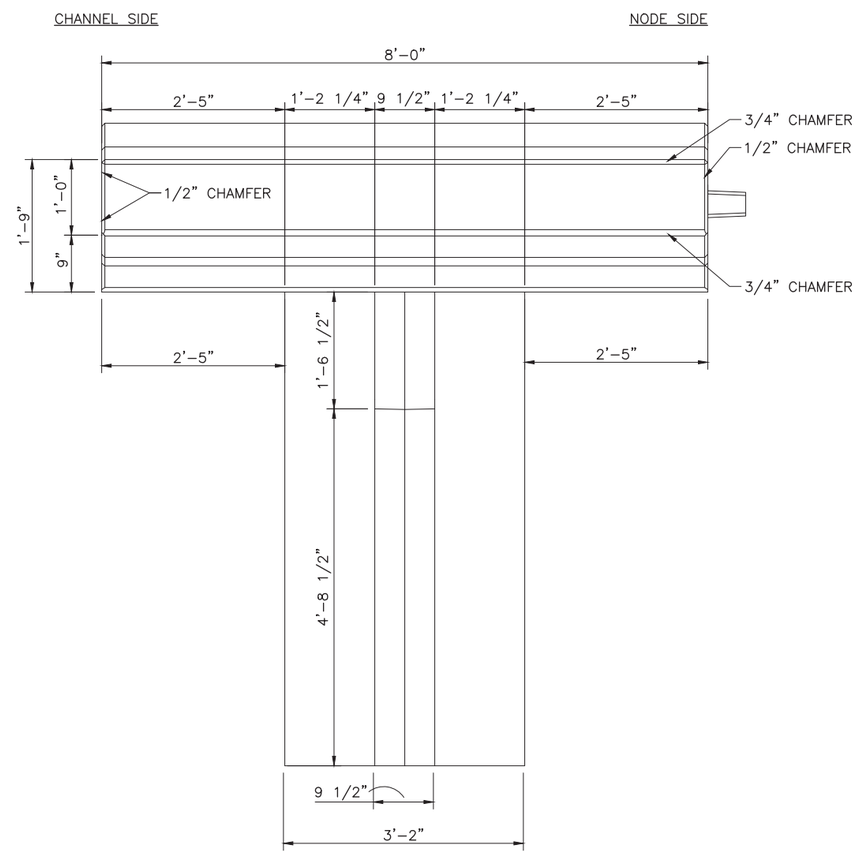

42" GRAVIX MSE TRAFFIC BARRIER UNIT (TOP VIEW)

0 6" 1 2 3 FT

12/13/2019

REVISIONS			
REV.	DESCRIPTION	BY	DATE
2	UPDATED PER REVIEW COMMENTS	TR	08/31/14
3	UPDATED PER REVIEW COMMENTS	TR	12/21/18
4	UPDATED PER REVIEW COMMENTS	TDC	7/9/19
5	UPDATED PER REVIEW COMMENTS	TDC	7/11/19
6	UPDATED PER REVIEW COMMENTS	TDC	9/27/19
7	UPDATED PER REVIEW COMMENTS	TDC	10/28/19

GRAVIX
PennDOT Precast Wall System
GRAVIX IS A LICENSED PRODUCT OF EARTH WALL PRODUCTS, LLC

I CERTIFY THAT ALL ASSUMPTIONS MADE IN DESIGNING THIS WALL HAVE BEEN VALIDATED THROUGH CONSTRUCTION DETAILS, SPECIAL NOTES AND / OR INSTRUCTIONS TO THE FABRICATOR, ERECTOR AND CONTRACTOR. CERTIFIED WITH RESPECT TO BEARING, SLIDING, INTERNAL STABILITY AND OVERTURNING OF THE GRAVIX STRUCTURE ONLY.

COMMONWEALTH OF PENNSYLVANIA
REGISTERED PROFESSIONAL
LANCE G. FATVASIK
ENGINEER
PE037419
PENNSYLVANIA
10/23/19

COMMONWEALTH OF PENNSYLVANIA
DEPARTMENT OF TRANSPORTATION

DRAWING NUMBER # 2016-296

42" GRAVIX MSE TRAFFIC BARRIER UNIT

DIMENSIONS - 2

LINE IS 2 INCHES AT FULL SIZE (IF NOT 2"-SCALE ACCORDINGLY)

DESIGNED TLR
DRAWN TDC
REVIEWED TLR

SHEET NUMBER
49 OF 52

THIS SHEET PLOTS ON 22" x 34" ANSI D

© Copyright 2018 by Earth Wall Products, LLC. All rights reserved. This document is the property of Earth Wall Products, LLC. It is to be used only for the specific project referred to or identified herein and is not to be used on other projects, in whole or in part, except by the express written agreement of Earth Wall Products, LLC.

NOTE:
NODE SIDE AND CHANNEL SIDE ARE INTERCHANGEABLE.

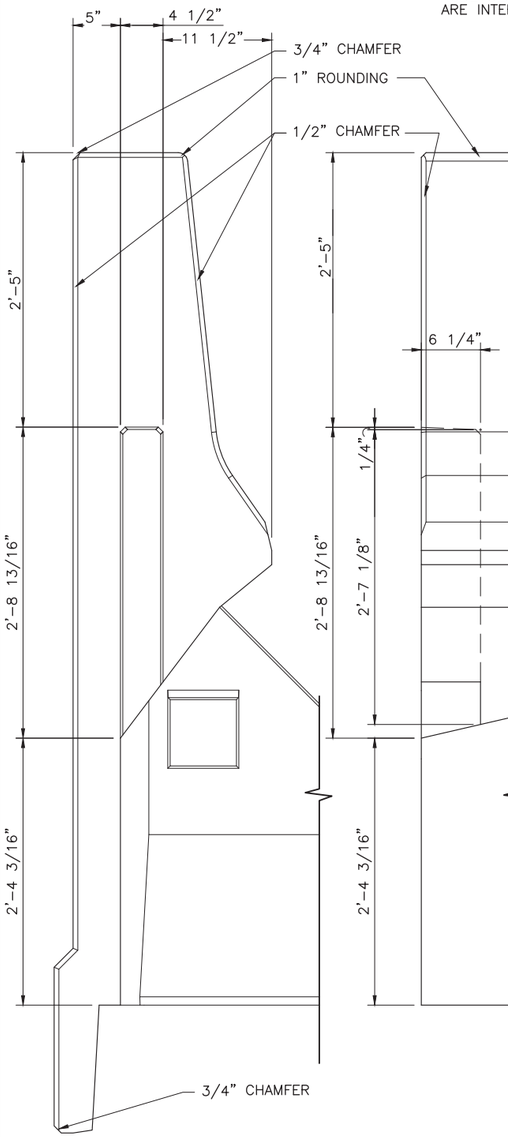

CHANNEL SIDE VIEW

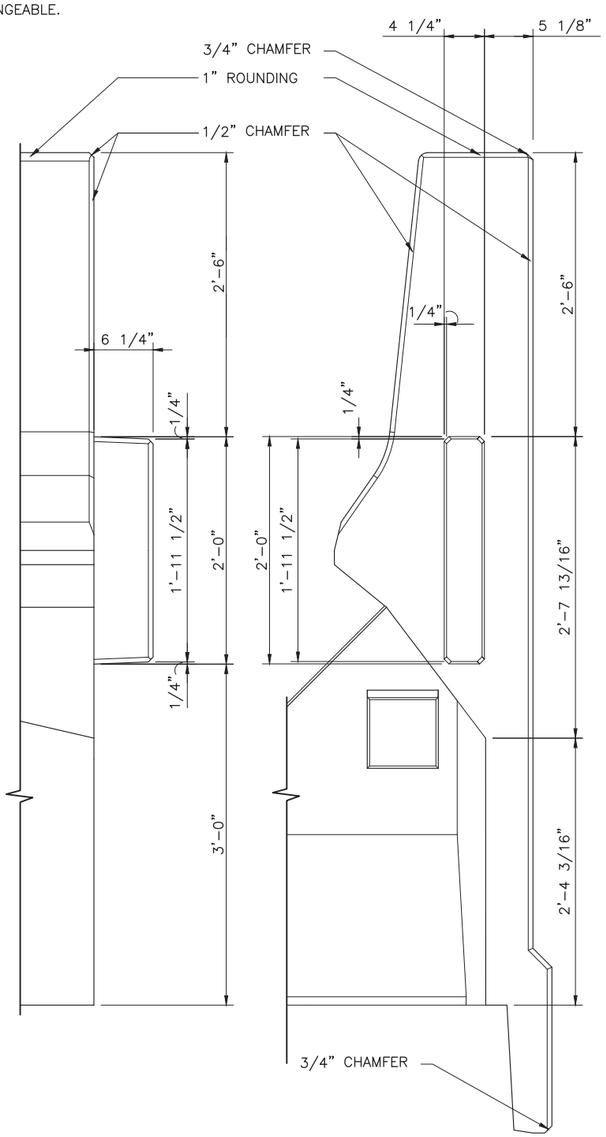

NODE SIDE VIEW

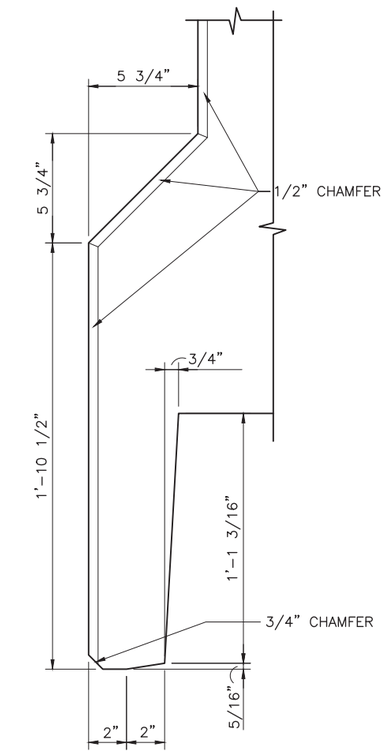

ENLARGED FRONT NOSING

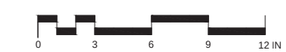

12/13/2019

GRAVIX Precast Wall System (2019-10-28) REV.dwg
10/28/2019 12:07 PM

REVISIONS

REV.	DESCRIPTION	BY	DATE
2	UPDATED PER REVIEW COMMENTS	TR	08/31/14
3	UPDATED PER REVIEW COMMENTS	TR	12/21/18
4	UPDATED PER REVIEW COMMENTS	TDC	7/9/19
5	UPDATED PER REVIEW COMMENTS	TDC	7/11/19
6	UPDATED PER REVIEW COMMENTS	TDC	9/27/19
7	UPDATED PER REVIEW COMMENTS	TDC	10/28/19

GRAVIX
PennDOT Precast Wall System
GRAVIX IS A LICENSED PRODUCT OF EARTH WALL PRODUCTS, LLC

I CERTIFY THAT ALL ASSUMPTIONS MADE IN DESIGNING THIS WALL HAVE BEEN VALIDATED THROUGH CONSTRUCTION DETAILS, SPECIAL NOTES AND / OR INSTRUCTIONS TO THE FABRICATOR, ERECTOR AND CONTRACTOR. CERTIFIED WITH RESPECT TO BEARING, SLIDING, INTERNAL STABILITY AND OVERTURNING OF THE GRAVIX STRUCTURE ONLY.

COMMONWEALTH OF PENNSYLVANIA
REGISTERED PROFESSIONAL
LANCE G. SALVADOR
ENGINEER
PENNSYLVANIA
10/28/19

COMMONWEALTH OF PENNSYLVANIA
DEPARTMENT OF TRANSPORTATION

DRAWING NUMBER # 2016-296

42" GRAVIX MSE TRAFFIC BARRIER UNIT

DIMENSIONS - 3

LINE IS 2 INCHES AT FULL SIZE (IF NOT 2"-SCALE ACCORDINGLY)

DESIGNED TLR
DRAWN TDC
REVIEWED TLR

SHEET NUMBER
50 OF 52

THIS SHEET PLOTS ON 22" x 34" ANSI D

© Copyright 2018 by Earth Wall Products, LLC. All rights reserved. This document is the property of Earth Wall Products, LLC. It is to be used only for the specific project referred to or identified herein and is not to be used on other projects, in whole or in part, except by the express written agreement of Earth Wall Products, LLC.

NOTE:
NODE SIDE AND CHANNEL SIDE ARE INTERCHANGEABLE.

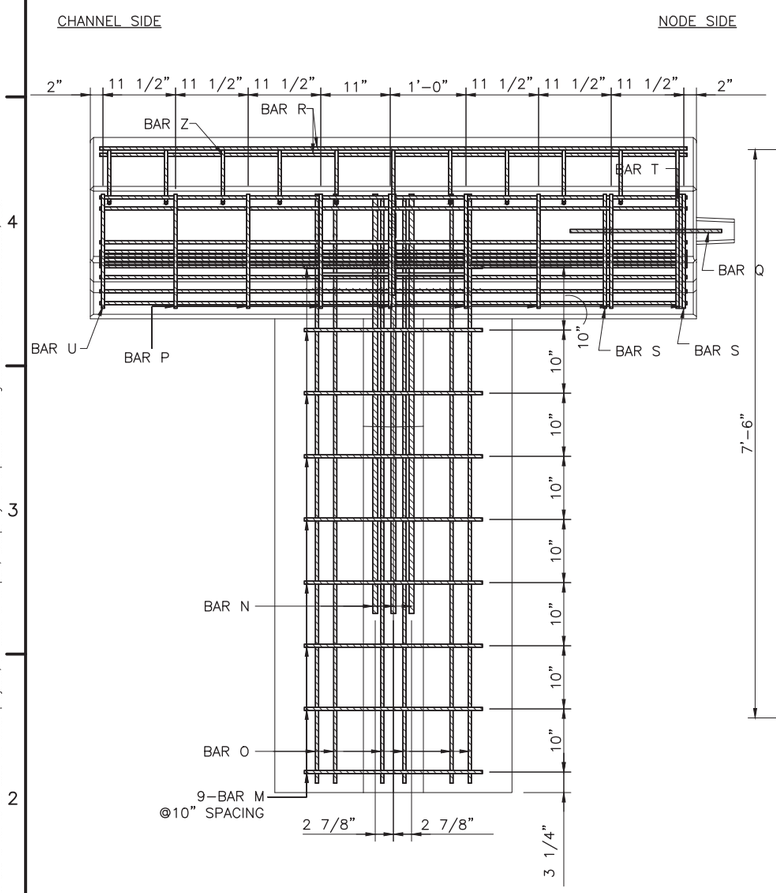

42" GRAVIX MSE TRAFFIC BARRIER UNIT (TOP VIEW)

0 6" 1 2 3 FT

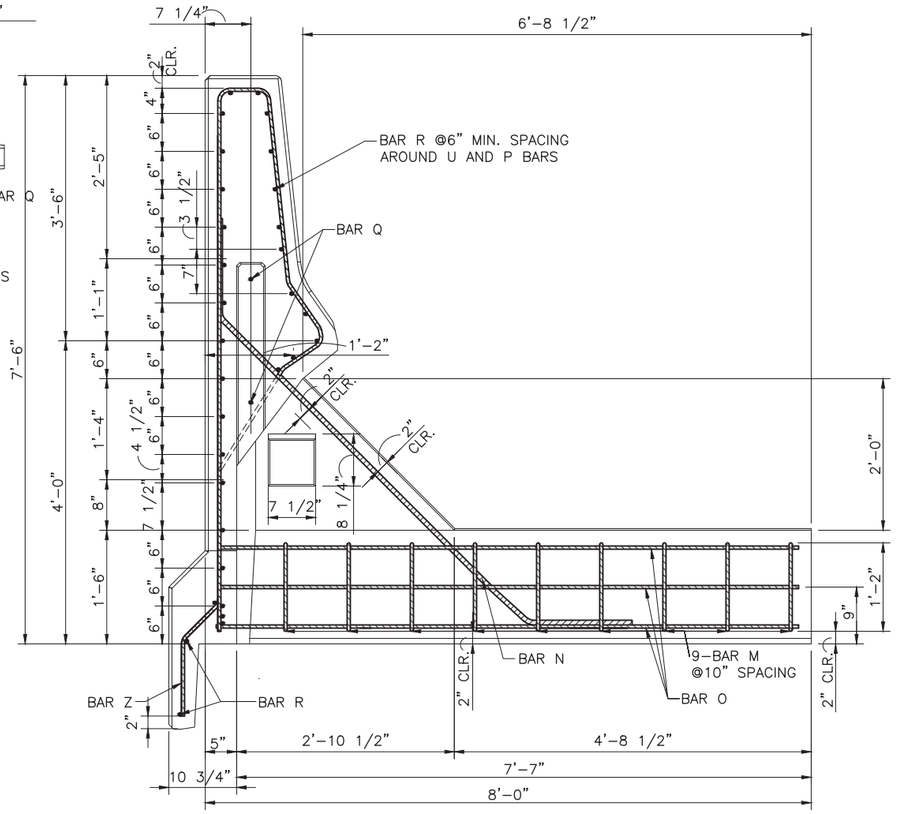

42" GRAVIX MSE TRAFFIC BARRIER UNIT (SIDE VIEW)

0 6" 1 2 3 FT

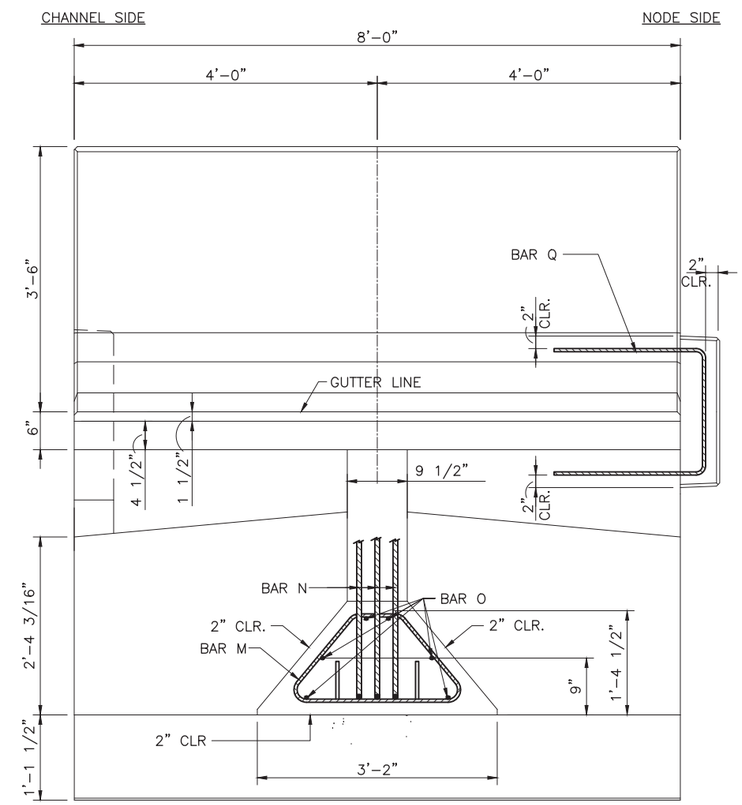

42" GRAVIX MSE TRAFFIC BARRIER UNIT (REAR VIEW)

0 6" 1 2 3 FT

12/13/2019

REVISIONS			
REV.	DESCRIPTION	BY	DATE
2	UPDATED PER REVIEW COMMENTS	TR	08/31/14
3	UPDATED PER REVIEW COMMENTS	TR	12/21/18
4	UPDATED PER REVIEW COMMENTS	TDC	7/9/19
5	UPDATED PER REVIEW COMMENTS	TDC	7/11/19
6	UPDATED PER REVIEW COMMENTS	TDC	9/27/19
7	UPDATED PER REVIEW COMMENTS	TDC	10/28/19

GRAVIX
PennDOT Precast Wall System
GRAVIX IS A LICENSED PRODUCT OF EARTH WALL PRODUCTS, LLC

I CERTIFY THAT ALL ASSUMPTIONS MADE IN DESIGNING THIS WALL HAVE BEEN VALIDATED THROUGH CONSTRUCTION DETAILS, SPECIAL NOTES AND / OR INSTRUCTIONS TO THE FABRICATOR, ERECTOR AND CONTRACTOR. CERTIFIED WITH RESPECT TO BEARING, SLIDING, INTERNAL STABILITY AND OVERTURNING OF THE GRAVIX STRUCTURE ONLY.

COMMONWEALTH OF PENNSYLVANIA
DEPARTMENT OF TRANSPORTATION

DRAWING NUMBER # 2016-296

42" GRAVIX MSE TRAFFIC BARRIER UNIT

REINFORCEMENT LAYOUT

LINE IS 2 INCHES AT FULL SIZE (IF NOT 2"–SCALE ACCORDINGLY)

DESIGNED TLR
DRAWN TDC
REVIEWED TLR

SHEET NUMBER
51 OF 52

GRAVIX Precast Wall System (2019-10-28) REV.dwg
10/28/2019 12:07 PM

THIS SHEET PLOTS ON 22" x 34" ANSI D

© Copyright 2018 by Earth Wall Products, LLC. All rights reserved. This document is the property of Earth Wall Products, LLC. It is to be used only for the specific project referred to or identified herein and is not to be used on other projects, in whole or in part, except by the express written agreement of Earth Wall Products, LLC.

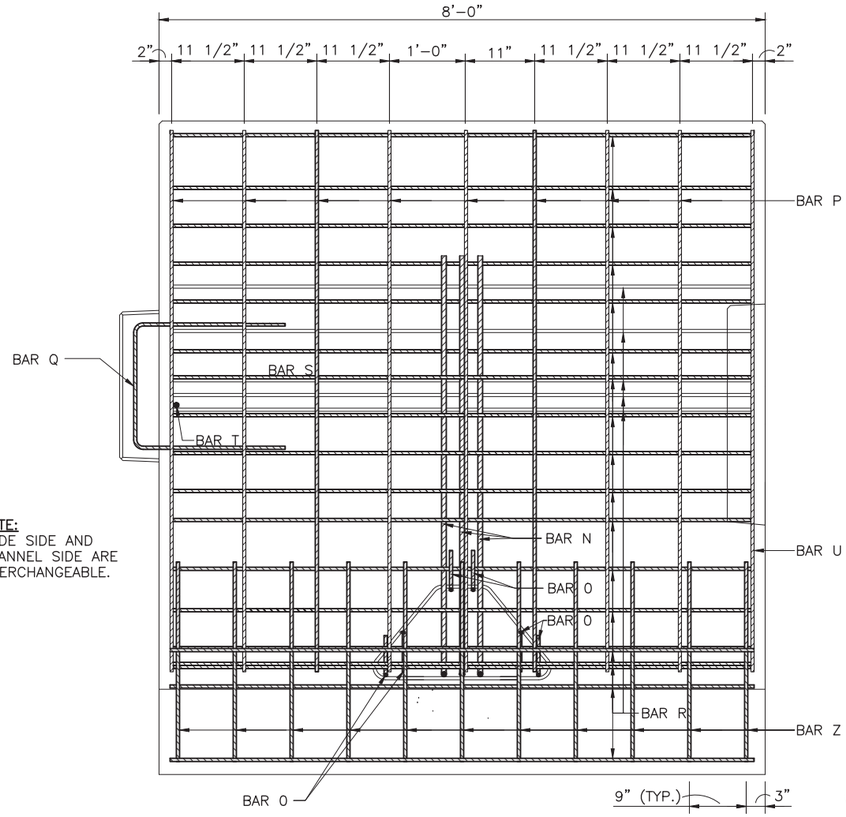

NOTE:
NODE SIDE AND CHANNEL SIDE ARE INTERCHANGEABLE.

42" GRAVIX MSE TRAFFIC BARRIER UNIT (FRONT VIEW)

NOTE:
USE ONLY EPOXY COATED REINFORCEMENT IN GRAVIX MSE TRAFFIC BARRIER UNIT.

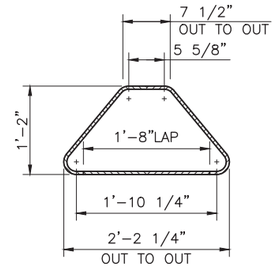

M BAR – #4 STIRRUP
9 REQUIRED

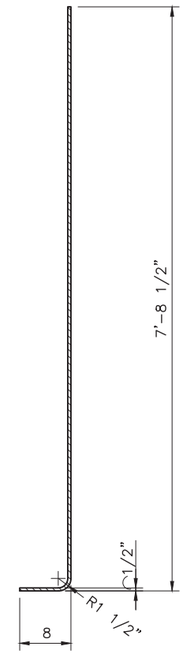

O BAR – #4 STEM BAR
6 REQUIRED

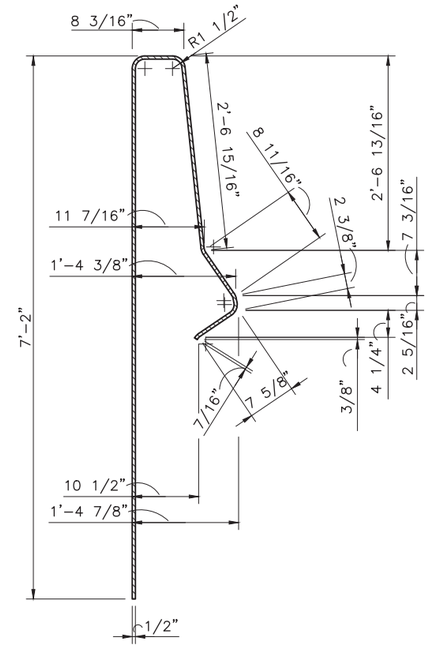

U BAR – #4 WALL BAR
1 REQUIRED

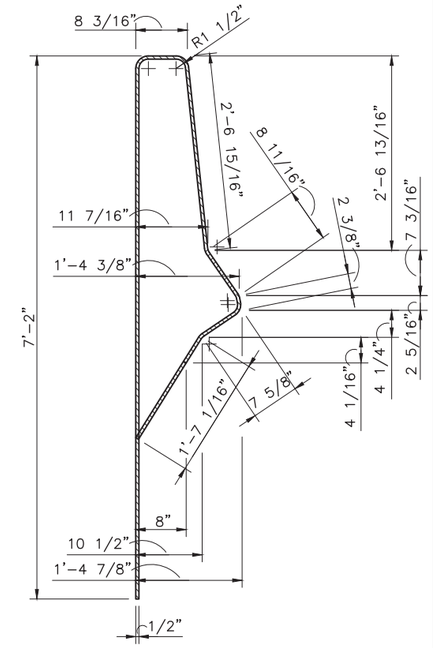

P BAR – #4 WALL BAR
8 REQUIRED

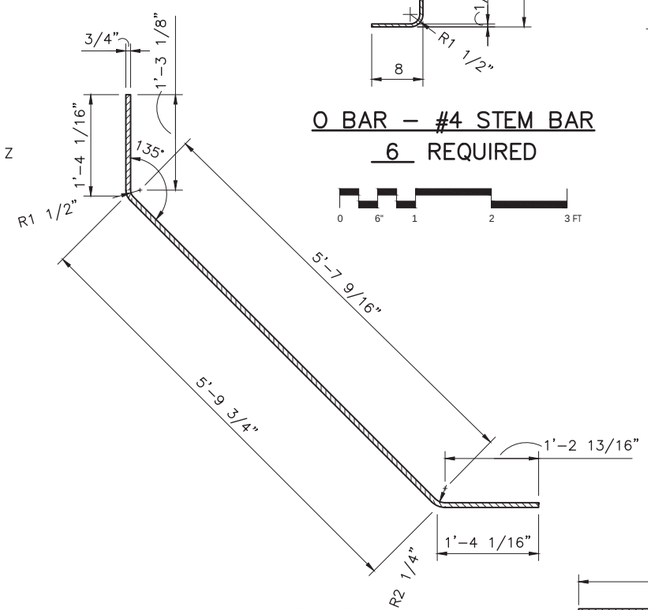

N BAR – #6 RIB BAR
3 REQUIRED

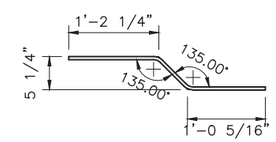

Z BAR – #4 NOSE BAR
11 REQUIRED

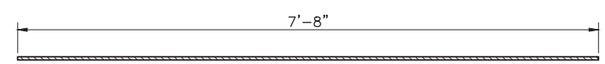

R BAR – #4 NODE BAR
28 REQUIRED

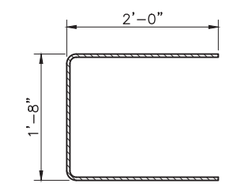

Q BAR – #4 NODE BAR
1 REQUIRED

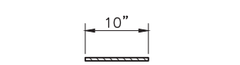

S BAR
2 REQUIRED

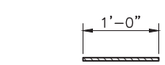

T BAR
1 REQUIRED

12/13/2019

REVISIONS			
REV.	DESCRIPTION	BY	DATE
2	UPDATED PER REVIEW COMMENTS	TR	08/31/14
3	UPDATED PER REVIEW COMMENTS	TR	12/21/18
4	UPDATED PER REVIEW COMMENTS	TDC	7/9/19
5	UPDATED PER REVIEW COMMENTS	TDC	7/11/19
6	UPDATED PER REVIEW COMMENTS	TDC	9/27/19
7	UPDATED PER REVIEW COMMENTS	TDC	10/28/19

GRAVIX
PennDOT Precast Wall System
GRAVIX IS A LICENSED PRODUCT OF EARTH WALL PRODUCTS, LLC

I CERTIFY THAT ALL ASSUMPTIONS MADE IN DESIGNING THIS WALL HAVE BEEN VALIDATED THROUGH CONSTRUCTION DETAILS, SPECIAL NOTES AND / OR INSTRUCTIONS TO THE FABRICATOR, ERECTOR AND CONTRACTOR. CERTIFIED WITH RESPECT TO BEARING, SLIDING, INTERNAL STABILITY AND OVERTURNING OF THE GRAVIX STRUCTURE ONLY.

COMMONWEALTH OF PENNSYLVANIA REGISTERED PROFESSIONAL LANCE G. FRASER ENGINEER PENNSYLVANIA 10/28/19

COMMONWEALTH OF PENNSYLVANIA
DEPARTMENT OF TRANSPORTATION

DRAWING NUMBER # 2016-296

42" GRAVIX MSE TRAFFIC BARRIER UNIT

REBAR DETAILS

LINE IS 2 INCHES AT FULL SIZE (IF NOT 2"–SCALE ACCORDINGLY)

DESIGNED TLR
DRAWN TDC
REVIEWED TLR

SHEET NUMBER
52 OF 52

GRAVIX Precast Wall System (2019-10-28) REV.dwg
10/28/2019 12:07 PM