PLOTTED: 4/8/2019
8:00:35 AM

STANDARD DETAILS

FOLDED STEEL PLATE GIRDER SYSTEM™

DESIGN SPECIFICATIONS

1.0 USE AND LIMITATIONS

CDR BRIDGE SYSTEMS, LLC TAKES FULL RESPONSIBILITY FOR ENGINEERING THEORY AND CALCULATION CORRECTNESS AND ENSURING THAT ALL DESIGN ASSUMPTIONS ARE VALIDATED IN THE CONTRACT DOCUMENTS EITHER BY NEEDED DETAILS OR CONSTRUCTION SPECIFICATIONS.

CDR BRIDGE SYSTEMS, LLC IS TO PREPARE DESIGN CALCULATIONS AND CONTRACT DRAWINGS FOR THE FOLDED STEEL PLATE GIRDER SYSTEM™ IN ACCORDANCE WITH THE GUIDELINES SPECIFIED HEREIN. THE FOLDED STEEL PLATE GIRDER DESIGN PARAMETERS AND OTHER LIMITATIONS ARE AS PER MANUFACTURER'S DESIGN SPECIFICATIONS PREPARED BY CDR BRIDGE SYSTEMS, LLC FOR THE FOLDED STEEL PLATE GIRDER SYSTEM™ (D.L. CLARK BUILDING, SUITE 610, 503 MARTINDALE STREET, PITTSBURGH, PA 15212), AND PENNSYLVANIA DEPARTMENT OF TRANSPORTATION DESIGN MANUAL, PART 4.

SECURE THE DISTRICT BRIDGE ENGINEER'S APPROVAL BEFORE INCORPORATING THE FOLDED STEEL PLATE GIRDER SYSTEM™ INTO ANY PROJECT. UPON DISTRICT BRIDGE ENGINEER APPROVAL, THE FOLDED STEEL PLATE GIRDER SYSTEM™ MAY BE SPECIFIED FOR USE AS A CONTRACTOR ALTERNATE.

2.0 TECHNICAL INFORMATION

THE FOLDED STEEL PLATE GIRDER SYSTEM™ CONSISTS OF A COLD BENT STEEL PLATE GIRDER WITH A PRECAST COMPOSITE CONCRETE DECK PANEL AS SHOWN IN THE FOLLOWING DRAWINGS.

THE FOLDED STEEL PLATE GIRDER SYSTEM™ IS ACCEPTABLE FOR USE IN ACCELERATED BRIDGE CONSTRUCTION AND CONVENTIONAL CONSTRUCTION.

THE FOLDED STEEL PLATE GIRDER SYSTEM™ MAY BE USED ON ANY EXISTING OR PROPOSED SUBSTRUCTURE TYPES. APPROACH SLABS CAN BE ACCOMMODATED.

THE FOLDED STEEL PLATE GIRDER SYSTEM™ MAY BE USED FOR SPAN LENGTHS BETWEEN 20 FT. AND 59 FT. AND BRIDGE SKEWS BETWEEN 45° AND 90°. SEE SHEET NO. 5 FOR ADDITIONAL INFORMATION.

THE MAXIMUM C/C GIRDER SPACING IS LIMITED TO 11'-4" DUE TO 12'-0" LANE WIDTH FOR SHIPPING. HOWEVER, GREATER GIRDER SPACING CAN BE ACCOMMODATED IF DECK SLAB IS PRECAST ON SITE. FOR ON SITE CASTING, SUBMIT A QC PLAN TO PENNDOT FOR REVIEW AND ACCEPTANCE. ALLOW A MINIMUM OF 15 DAYS FOR PENNDOT REVIEW.

THE DESIGN IS APPLICABLE FOR SIMPLY SUPPORTED SPANS ONLY. THE DESIGN IS APPLICABLE FOR BOTH CONVENTIONAL ABUTMENTS AND INTEGRAL ABUTMENTS.

THE TRAPEZOIDAL SHAPED GIRDER IS ESSENTIALLY A BOX SECTION. INTERMEDIATE STIFFENERS, DIAPHRAGMS, OR CROSS FRAMES ARE NOT REQUIRED.

ELEVEN (11) STANDARD FOLDED STEEL PLATE GIRDER DESIGNATIONS WITH BOTH A ⅜" AND ½" PLATE THICKNESS ARE AVAILABLE FOR USE. INDIVIDUAL PLATE DIMENSIONS MAY BE MODIFIED BY CDR BRIDGE SYSTEMS, LLC AS REQUIRED BY DESIGN.

THE COMPOSTIE GIRDER IS COMPACT. THE TOP FLANGE OF THE NON-COMPOSITE GIRDER IS A NON-COMPACT SLENDER ELEMENT.

BRIDGE BARRIERS IN ACCORDANCE WITH THE PENNDOT BD-600M AND BC-700 SERIES STANDARD DRAWINGS CAN BE ACCOMMODATED.

BEARING STIFFENERS, BEARINGS, CONCRETE END DIAPHRAGMS, DECK SLAB DESIGN AND DETAILS, BARRIERS, MISCELLANEOUS STEEL DETAILS, APPROACH SLAB DETAILS, AND WATERPROOFING DETAILS ARE IN ACCORDANCE WITH THE PENNDOT BD-600M AND BC-700 SERIES STANDARD DRAWINGS.

FLANGE SEPARATORS ARE USED FOR BRACING OF THE BOTTOM FLANGES.

SHOP WELDING OF THE GIRDERS IS NOT REQUIRED FOR GIRDER FABRICATION.

CREATE GIRDERS FROM A SINGLE PLATE THROUGH COLD FORMING PROCESS. BULLETIN 15 MACHINE SHOP OR AISC AND DEPARTMENT REGISTER OF CERTIFIED PLANT IS REQUIRED FOR FORMING PLATE.

INSIDE RADIUS USED FOR COLD BENDING IS 5 TIMES THE GIRDER PLATE THICKNESS.

STRUCTURAL STEEL FOR GIRDERS IS ASTM A709/A709M, GRADE 50. ALL STRUCTURAL STEEL SHALL BE HOT DIP GALVANIZED.

DUE TO COLD BENDING, THE GIRDERS CANNOT BE CAMBERED. DEAD LOAD DEFLECTION, VERTICAL CURVE, AND CROSS SLOPE SHALL BE ACCOMMODATED IN THE GIRDER HAUNCH.

RAISED SIDEWALKS ARE NOT CONSIDERED FOR THE DESIGN.

3.0 GENERAL DESIGN

SUBMIT HARD COPIES OR AN ELECTRONIC COPY OF CONSTRUCTION DRAWINGS AND DESIGN CALCULATIONS FOR THE FOLDED STEEL PLATE GIRDER SYSTEM™ TO THE DISTRICT BRIDGE ENGINEER FOR REVIEW AND APPROVAL.

ON THE FIRST SHEET OF THE CONSTRUCTION DRAWINGS AND DESIGN CALCULATIONS, PROVIDE A PROFESSIONAL ENGINEER'S SEAL, LICENSED IN THE COMMONWEALTH OF PENNSYLVANIA, A VALID SIGNATURE IN INK, A BUSINESS NAME AND ADDRESS, AND THE DATE.

ON THE FIRST SHEET OF THE CONSTRUCTION DRAWINGS, INCLUDE THE FOLLOWING STATEMENT PLACED ABOVE THE PROFESSIONAL ENGINEER'S SEAL: "ALL DESIGN ASSUMPTIONS ARE VALIDATED THROUGH EITHER NOTES TO THE CONTRACTOR OR DETAILS ON THESE DRAWINGS."

THE DESIGN IS IN ACCORDANCE WITH THE AASHTO LRFD BRIDGE DESIGN SPECIFICATIONS, 7TH EDITION, 2014, AND AS SUPPLEMENTED BY DESIGN MANUAL, PART 4 (INCLUDING LATEST REVISIONS, APRIL 2015).

IN THE EVENT THAT CERTAIN DESIGN PARAMETERS OR SPECIFICATIONS ARE IN CONFLICT, THE FOLLOWING ORDER OF PRECEDENCE GOVERNS:

A) DESIGN REQUIREMENTS LISTED IN "SPECIAL DRAWINGS AND SPECIAL DESIGN REQUIREMENTS" OF THE SPECIAL PROVISIONS.
B) PENNDOT DESIGN MANUAL, PART 4 (INCLUDING LATEST REVISIONS, APRIL 2015).
C) PENNDOT STANDARD DRAWINGS, CURRENT VERSIONS.
D) AASHTO LRFD BRIDGE DESIGN SPECIFICATIONS, 7TH EDITION, 2014.
E) IN THE EVENT THAT A CLEAR ORDER OF PRECEDENCE CANNOT BE ESTABLISHED, OR A DIFFERENCE IN INTERPRETATION OF THE DESIGN CANNOT BE RESOLVED, THE CHIEF BRIDGE ENGINEER WILL PROVIDE THE ORDER OF PRECEDENCE TO BE USED.

LIVE LOAD DISTRIBUTION TO GIRDERS IS BASED UPON THE DM-4 DISTRIBUTION FACTOR METHOD. DISTRIBUTION FACTORS ARE CALCULATED FOR BOTH STEEL MULTI-GIRDERS AND OPEN STEEL BOX GIRDERS. THE CONTROLLING DISTRIBUTION FACTORS ARE USED FOR DESIGN.

DESIGN IS IN ACCORDANCE WITH THE LRFD METHOD.

DESIGN LIVE LOADS:

PHL-93 OR P-82 (204 KIP PERMIT LOAD)

FATIGUE DESIGN IS BASED ON THE FOLLOWING:
STEEL STRUCTURES: DESIGN YEAR ADTT (ONE DIRECTIONAL)

DESIGN DEAD LOADS:

INCLUDES SURFACE AREA DENSITY OF 0.030 KSF FOR FUTURE WEARING SURFACE ON THE DECK SLAB.

INCLUDES OPTIONAL 0.015 KSF FOR S.I.P. FORMS.

INCLUDES PROVISIONS FOR UTILITIES, EPOXY OVERLAY, AND/OR LATEX MODIFIED CONCRETE (LMC) OVERLAY.

DESIGN PARAMETERS:

CAST-IN-PLACE DECK SLAB: f'c = 4 ksi (MIN.)
CAST-IN-PLACE DIAPHRAGM: f'c = 3.5 ksi (MIN.)
BARRIER: f'c = 3.5 ksi (MIN.)
STRUCTURAL STEEL: Fy = 50 ksi
REINFORCING STEEL: Fy = 60 ksi

USE f'c = 5 KSI MIN FOR PRECAST CONCRETE DECK PANELS. USE OF CLASS AAAP CEMENT CONCRETE IS NOT REQUIRED FOR PRECAST DECK PANELS.

HAUNCH AND BARRIER ARE EXCLUDED FROM THE COMPOSITE GIRDER SECTION PROPERTIES.

DECK SLAB THICKNESS INCLUDES A ½ IN. INTEGRAL WEARING SURFACE, BUT EXCLUDES OVERLAYS. AN OVERLAY CAN BE SUBSTITUTED IN PLACE OF THE INTEGRAL WEARING SURFACE.

PROVIDE STRUCTURAL STEEL CONFORMING TO AASHTO M 270/M 270M, GRADE 50 (ASTM A 709/A 709M, GRADE 50) DESIGNATION, EXCEPT WHEN NOTED OTHERWISE. ALL STRUCTURAL STEEL SHALL BE HOT DIP GALVANIZED.

ALL STRUCTURAL STEEL HARDWARE SHALL BE EITHER HOT DIP GALVANIZED OR MECHANICALLY GALVANIZED:

HIGH STRENGTH BOLTS: ASTM F3125, GRADE A325, TYPE 1 (MECHANICALLY GALVANIZED)

ANCHOR BOLTS: ASTM F1554, GRADE 55 (HOT DIP GALVANIZED)

NUTS: ASTM A563/A563M, GRADE DH (MECHANICALLY GALVANIZED)

WASHERS: ASTM F436/F436M, TYPE 1 (MECHANICALLY GALVANIZED)

SEPARATOR PLATES SHALL BE SPACED BY DESIGN.

4.0 STRUCTURAL DESIGN

APPROXIMATE METHOD USING GIRDER TABLES:

DETERMINE DISTRIBUTION FACTORS, DEAD LOADS, AND LIVE LOADS BY HAND CALCULATION OR BY USING STLRFD FOR A GIVEN C/C BEAM SPACING, OVERHANG WIDTH, SPAN LENGTH, AND SKEW.

SELECT APPLICABLE FOLDED STEEL PLATE GIRDER DESIGNATIONS FROM THE GIRDER TABLE DRAWINGS BASED ON MINIMUM REQUIRED NON-COMPOSITE AND COMPOSITE SECTION PROPERTIES, NOMINAL MOMENT CAPACITY, AND GIRDER DEPTH.

VERIFY GIRDER STRESSES AT THE STRENGTH AND SERVICE LIMIT STATES AND LIVE LOAD DEFLECTION.

CALCULATE INVENTORY AND OPERATING RATINGS FOR ALL LIVE LOADS.

ALTERNATIVELY, INPUT THE "EQUIVALENT PLATE GIRDER FOR STLRFD" FROM THE GIRDER TABLE DRAWINGS INTO STLRFD AND RERUN THE ANALYSIS.

ANALYSIS PROCEDURE:

ASSUME C/C GIRDER SPACING AND OVERHANG WIDTH FOR A GIVEN SPAN LENGTH AND SKEW.

CALCULATE DISTRIBUTION FACTORS PER AASHTO (A) AND DESIGN MANUAL, PART 4 (D) SECTION 4.6.2 FOR STEEL MULTI-GIRDERS AND STEEL BOX GIRDERS. UTILIZE THE CONTROLLING DISTRIBUTION FACTORS FOR DESIGN.

CALCULATE THE APPLIED MAXIMUM UNFACTORED DEAD LOAD MOMENT AND SHEAR IN ACCORDANCE WITH A 3.5 & D 3.5.

CALCULATE APPLIED MAXIMUM UNFACTORED LIVE LOAD MOMENTS AND SHEARS FOR ALL LIVE LOAD VEHICLES IN ACCORDANCE WITH A 3.6 & D 3.6.

FACTOR DEAD AND LIVE LOADS INTO LOAD COMBINATIONS PER A 3.4 & D 3.4.

CALCULATE NON-COMPOSITE AND COMPOSITE GIRDER SECTION PROPERTIES.

CALCULATE THE FLEXURAL AND SHEAR RESISTANCE OF THE NON-COMPOSITE GIRDER SECTION PER A 6.12.2.2.2. AND A 6.10.3.3.

CALCULATE THE FLEXURAL AND SHEAR RESISTANCE OF THE COMPOSITE GIRDER SECTION PER A 6.10.7.1.2, A 6.10.9 AND A 6.11.9.

CHECK THE UNCURED DECK SLAB STRESS ON THE NON-COMPOSITE GIRDER PER A 6.10.3.2 AND A 6.10.3.3.

CHECK THE MOMENT AND SHEAR RESISTANCE OF THE COMPOSITE SECTION FOR THE STRENGTH LIMIT STATE PER A 6.10.6.2.2, A 6.10.7.1, A 6.10.7.3 AND A 6.11.9.

CHECK ELASTIC LIVE LOAD DEFLECTION PER D 2.5.2.6.2.

CHECK PERMANENT DEFORMATIONS PER A 6.10.4.2.

CHECK FATIGUE PER A 6.6.1 AND D 6.6.1.

DESIGN SHEAR CONNECTORS PER A 6.10.10 AND D 6.10.10.

CALCULATE LIVE LOAD RATINGS.

DESIGN BEARING STIFFENERS PER A 6.10.11.2 AND D 6.10.11.2.

DESIGN BEARINGS PER A 14.7.6 AND D 14.7.6.

Mark	Description	By	Chk'd.	Recm'd.	Date
1	VARIOUS UPDATES	RTE	WES		

REVISIONS

THIS DRAWING IS THE PROPERTY OF CDR BRIDGE SYSTEMS, LLC. CDR BRIDGE SYSTEMS, LLC IS A LICENSEE OF THE FOLDED STEEL PLATE GIRDER PATENT. NEITHER THE DRAWING OR REPRODUCTION OF IT NOR INFORMATION DERIVED FROM IT IS TO BE GIVEN TO OTHERS WITHOUT THE EXPRESSED CONSENT OF CDR BRIDGE SYSTEMS, LLC. NO USE IS TO BE MADE OF IT WHICH IS OR MAY BE IN ANY WAY INJURIOUS TO AND/OR CONTRARY TO THE INTERESTS OF CDR BRIDGE SYSTEMS, LLC. CDR BRIDGE SYSTEMS, LLC MAKES NO REPRESENTATION OR WARRANTIES AS TO ANY USE OF THIS DRAWING OTHER THAN THAT OF WHICH CDR BRIDGE SYSTEMS, LLC ORIGINALLY INTENDED. THIS FOLDED STEEL PLATE GIRDER SYSTEM IS COVERED UNDER U.S. PATENT NUMBER 7,627,921

PENNDOT DRAWING #14-604-BDTD (REV.1)

9/19/2019

PENNSYLVANIA
DEPARTMENT OF TRANSPORTATION
RECOMMENDED
Thomas P Macioce
CHIEF BRIDGE ENGINEER

COMMONWEALTH OF PENNSYLVANIA
REGISTERED PROFESSIONAL
ROBERT T. ELLIOTT, JR.
ENGINEER
PE-055773-E

DESIGNER
CDR BRIDGE SYSTEMS
D.L. CLARK BUILDING, SUITE 610
503 MARTINDALE STREET
PITTSBURGH, PA 15212-5746
P: 412-322-0313
F: 412-322-2138
WEB: www.cdrbridges.com

DATE:	04/08/19
SCALE:	NOT TO SCALE
DESIGNED:	RTE
DRAWN:	RTE
CHECKED:	WES
CDR JOB #:	

COMMONWEALTH OF PENNSYLVANIA
DEPARTMENT OF TRANSPORTATION
BUREAU OF PROJECT DELIVERY

CDR BRIDGE SYSTEMS, LLC
FOLDED STEEL PLATE GIRDER SYSTEM

DESIGN SPECIFICATIONS

OPERATOR: Robert.Elliott
FILE PATH: P:\CDR BRIDGE\PROPOSALS\P3672.00-Folded_Steel_Plate_Girder\Design\USTN\PennDOT\01-02 FSPG General Notes.dgn

STANDARD DETAILS

FOLDED STEEL PLATE GIRDER SYSTEM™

CONSTRUCTION SPECIFICATIONS

1.0 GENERAL

PROVIDE MATERIALS AND PERFORM WORK IN ACCORDANCE WITH SPECIFICATIONS, PUBLICATION 408, CURRENT VERSION, AASHTO/AWS D1.5/D1.5: 2008 BRIDGE WELDING CODE, AND THE CONTRACT SPECIAL PROVISIONS.

STEEL AND CONCRETE FABRICATORS MUST BE BULLETIN 15 (PENNDOT PUB. 35) APPROVED.

PROVIDE STRUCTURAL STEEL CONFORMING TO AASHTO M 270/M 270M, GRADE 50 (ASTM A 709/A 709M, GRADE 50) DESIGNATION, EXCEPT WHEN NOTED OTHERWISE. ALL STRUCTURAL STEEL SHALL BE HOT DIP GALVANIZED.

PROVIDE FABRICATED STRUCTURAL STEEL IN ACCORDANCE WITH PUBLICATION 408 SECTION 1050 AND 1105, AS MODIFIED BY THE CONTRACT SPECIAL PROVISIONS.

ALL STRUCTURAL STEEL HARDWARE SHALL BE EITHER HOT DIP GALVANIZED OR MECHANICALLY GALVANIZED:

HIGH STRENGTH BOLTS: ASTM F3125, GRADE A325, TYPE 1 (MECHANICALLY GALVANIZED)

ANCHOR BOLTS: ASTM F1554, GRADE 55 (HOT DIP GALVANIZED)

NUTS: ASTM A563/A563M, GRADE DH (MECHANICALLY GALVANIZED)

WASHERS: ASTM F436/F436M, TYPE 1 (MECHANICALLY GALVANIZED)

PROVIDE 2" CONCRETE COVER ON REINFORCEMENT BARS, EXCEPT AS NOTED.

USE CLASS AAAP CEMENT CONCRETE FOR CAST-IN-PLACE DECK SLABS, FOR FUTURE REDECKING, AND END DIAPHRAGMS.

USE CLASS AA CEMENT CONCRETE IN BARRIERS.

PROVIDE CEMENT CONCRETE IN ACCORDANCE WITH PUBLICATION 408 SECTION 704, 714, AND 1001, AS MODIFIED BY THE CONTRACT SPECIAL PROVISIONS.

ULTRA HIGH PERFORMANCE CONCRETE (UHPC) MIX DESIGN AND CONSTRUCTION SHALL BE IN ACCORDANCE WITH THE UHPC STANDARD SPECIAL PROVISION.

A HIGHER CLASS CONCRETE MAY BE SUBSTITUTED FOR A LOWER CLASS CONCRETE AT NO ADDITIONAL COST TO THE DEPARTMENT, IF APPROVED BY THE DISTRICT BRIDGE ENGINEER.

PROVIDE GRADE 60 REINFORCING STEEL BARS THAT MEET THE REQUIREMENTS OF ASTM A 615/A 615M, A 996/A 996M OR A 706/A 706M. DO NOT WELD GRADE 60 REINFORCING STEEL BARS UNLESS SPECIFIED. DO NOT USE RAIL STEEL A 996/A 996M REINFORCEMENT BARS IN BARRIERS OR WHERE BENDING OR WELDING OF THE REINFORCEMENT BARS IS INDICATED.

USE EPOXY-COATED REINFORCEMENT BARS IN THE DECK SLAB, BARRIERS, AND CONCRETE END DIAPHRAGMS.

GALVANIZED REINFORCING STEEL BARS MAY BE SUBSTITUTED FOR EPOXY-COATED REINFORCING STEEL BARS AT NO ADDITIONAL COST TO THE DEPARTMENT.

RAKE-FINISH ALL HORIZONTAL CONSTRUCTION JOINTS, EXCEPT AS INDICATED.

VERIFY ALL DIMENSIONS AND GEOMETRY OF THE EXISTING OR NEW STRUCTURE IN THE FIELD AS NECESSARY FOR PROPER FIT OF THE PROPOSED CONSTRUCTION.

CONSTRUCT DECK SLAB TRANSVERSE CONSTRUCTION JOINTS PARALLEL TO THE BRIDGE CENTERLINE OF BEARINGS.

CHAMFER EXPOSED CONCRETE EDGES 1 IN. BY 1 IN., EXCEPT AS NOTED.

ALL DIMENSIONS SHOWN ARE HORIZONTAL, EXCEPT AS NOTED.

USE REMOVABLE FORMS TO CONSTRUCT THE DECK SLAB.

DECK SLAB THICKNESS INCLUDES A ½ IN. INTEGRAL WEARING SURFACE, BUT EXCLUDES OVERLAYS. AN OVERLAY CAN BE SUBSTITUTED IN PLACE OF THE INTEGRAL WEARING SURFACE.

SUPERSTRUCTURE DIMENSIONS SHOWN ARE FOR A NORMAL TEMPERATURE OF 68°F.

PROVIDE MINIMUM EMBEDMENT AND SPLICE LENGTHS IN ACCORDANCE WITH STANDARD DRAWING BC-736M, UNLESS OTHERWISE INDICATED.

2.0 NOTES FOR STEEL GIRDERS

SHOP OR FIELD SPLICES WILL NOT BE PERMITTED.

DO NOT USE FORM SUPPORT SYSTEMS THAT WILL CAUSE UNACCEPTABLE OVERSTRESS OR DEFORMATION TO PERMANENT BRIDGE MEMBERS.

ALL FASTENERS ARE ⅞ IN. DIAMETER HS BOLTS, EXCEPT AS NOTED.

PREPARE BEARING AREAS AS SPECIFIED IN PUBLICATION 408, SECTION 1001.3(K)9.

THREADED STUDS FOR THE SUPPORT OF THE OVERHANG DECK FORMING BRACKET ARE PERMITTED PROVIDED THE THREADED STUD IS ATTACHED WITH THE SAME WELDING PROCESS AS THE SHEAR STUDS.

WELDING OF REINFORCEMENT BARS DURING FABRICATION OR CONSTRUCTION IS NOT PERMITTED UNLESS SPECIFIED.

PROVIDE WELDED STUD SHEAR CONNECTORS MANUFACTURED FROM STEEL CONFORMING TO ASTM A 108.

SET ANCHOR BOLTS TO TEMPLATE OR IN PREFORMED HOLES. DO NOT DRILL UNLESS SPECIFICALLY INDICATED ON PLANS. FILL THE PREFORMED HOLES WITH NON-SHRINK GROUT. FILL THE CLEARANCE BETWEEN ANCHOR BOLTS AND HOLES IN MASONRY PLATES WITH APPROVED NON-HARDENING CAULKING COMPOUND CONFORMING TO PUBLICATION 408, SECTION 705.8.

DO NOT PAINT FABRICATED STRUCTURAL STEEL. STRUCTURAL STEEL SHALL BE HOT DIP GALVANIZED.

STABILITY OF PARTIAL GIRDERS AND COMPLETE GIRDER UNITS IS TO BE MAINTAINED BY THE CONTRACTOR DURING ERECTION, UNTIL ALL GIRDER UNITS ARE IN-PLACE AND ALL BOLTS AND CLOSURE POURS ARE PROPERLY INSTALLED. ERECTION LOADS INCLUDING SELF WEIGHT OF THE STEEL MEMBERS AND PRECAST DECK, WIND LOADING, AND CONSTRUCTION LIVE LOADING EFFECTS ARE TO BE EVALUATED BY THE CONTRACTOR FOR STABILITY, STRESSES, AND DEFLECTIONS ON THE STEEL MEMBERS DURING ANY STAGE OF ERECTION.

ALL BEARING STIFFENERS SHALL BE VERTICAL AFTER FINAL ERECTION.

THE GIRDERS ARE NOT DESIGNED TO RESIST ANY TORSIONAL OR LATERAL FORCES DUE TO TEMPORARY CONSTRUCTION LOADS. THE CONTRACTOR MUST PROVIDE ANY TEMPORARY BRACING NECESSARY TO SUPPORT THE GIRDER WEB AND FLANGES AGAINST ALL TORSIONAL OR LATERAL FORCES RESULTING FROM CONSTRUCTION LOADS.

THE CONTRACTOR MUST PROVIDE ERECTION METHODS AND DETAILED ERECTION PLANS.

3.0 WELDING NOTES FOR STIFFENERS, BEARING AREAS, LIFTING LUGS, AND STUDS

WELDING SPECIFICATIONS: AASHTO/AWS D1.5M/D1.5 BRIDGE WELDING CODE (2008) CONSISTENT WITH PUBLICATION 408 SECTION 1105.03(m), AND THE CONTRACT SPECIAL PROVISIONS. DO NO FIELD-WELD ON ANY PART OF THE BRIDGE, EXCEPT WHERE SHOWN ON THE DRAWINGS, WITHOUT PRIOR APPROVAL OF THE ENGINEER.

TEST COMPLETED WELDS USING VISUAL AND NONDESTRUCTIVE METHODS IN ACCORDANCE WITH AASHTO/AWS D1.5M/D1.5 BRIDGE WELDING CODE, CHAPTER 6.

BRIDGE LOAD RATINGS

ADTT (AT THE TIME OF DESIGN)

SPAN NO.		FOLDED STEEL PLATE GIRDER					
		H20	HS20	ML-80	TK527	PHL-93	P-82
INVENTORY RATING (IR)	DIST. FACTOR						
	LOCATION						
	LIMIT STATE						
	RATING FACTOR						
OPERATING RATING (OR)	DIST. FACTOR						
	LOCATION						
	LIMIT STATE						
	RATING FACTOR						

PER DESIGN

INDEX OF DRAWINGS

TITLE	SHEET
DESIGN SPECIFICATIONS	1 OF 21
INDEX OF DRAWINGS & CONSTRUCTION SPECIFICATIONS	2 OF 21
GENERAL PLAN & ELEVATION	3 OF 21
TYPICAL SECTIONS	4 OF 21
GIRDER PANEL LAYOUT	5 OF 21
DIAPHRAGM DETAILS - 1	6 OF 21
DIAPHRAGM DETAILS - 2	7 OF 21
GIRDER DETAILS - 1	8 OF 21
GIRDER DETAILS - 2	9 OF 21
GIRDER TOLERANCES	10 OF 21
GIRDER TABLES - 1 THRU 11	11-21 OF 21

9/19/2019

PENNDOT DRAWING #14-604-BDTD (REV.1)

COMMONWEALTH OF PENNSYLVANIA
DEPARTMENT OF TRANSPORTATION
BUREAU OF PROJECT DELIVERY

CDR BRIDGE SYSTEMS, LLC

FOLDED STEEL PLATE GIRDER SYSTEM

INDEX OF DRAWINGS & CONSTRUCTION SPECIFICATIONS

SHEET 2 OF 21

DESIGNER

CDR BRIDGE SYSTEMS
D.L. CLARK BUILDING, SUITE 610
503 MARTINDALE STREET
PITTSBURGH, PA 15212-5746
P: 412-322-0313
F: 412-322-2138
WEB: www.cdrbridges.com

DATE:	04/08/19
SCALE:	NOT TO SCALE
DESIGNED:	RTE
DRAWN:	RTE
CHECKED:	WES
CDR JOB #:	

PLOTTED: 4/8/2019 8:01:01 AM
OPERATOR: Robert.Elliott
FILE PATH: P:\CDR BRIDGE\PROPOSALS\P3672.00-Folded_Steel_Plate_Girder\Design\USTN\PennDOT\01-02 FSPG General Notes.dgn

PLOTTED: 4/8/2019
8:01:37 AM

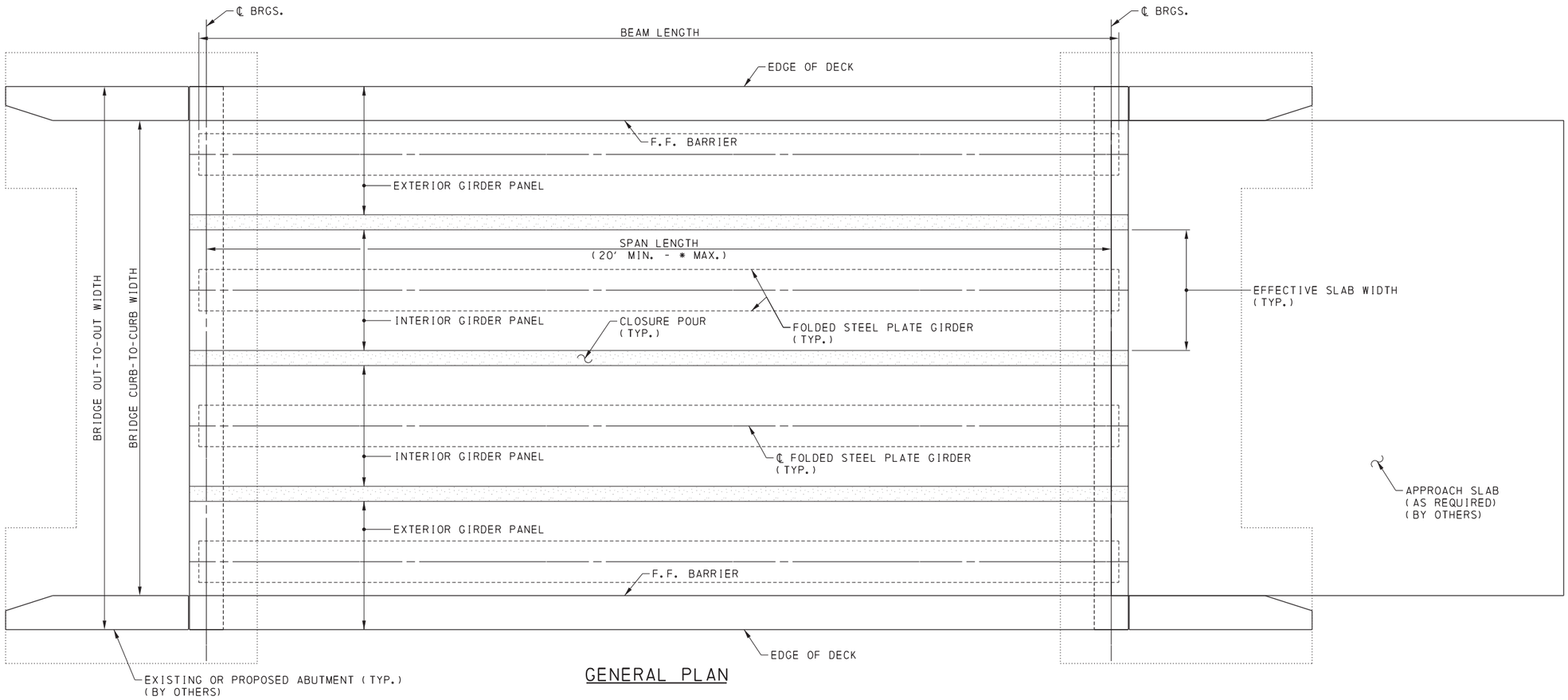

GENERAL PLAN

*FOR MAXIMUM SPAN LENGTHS SEE SHEET NO. 5

NOTE: THIS BRIDGE SYSTEM IS COMPATIBLE WITH ALL SUBSTRUCTURE TYPES.

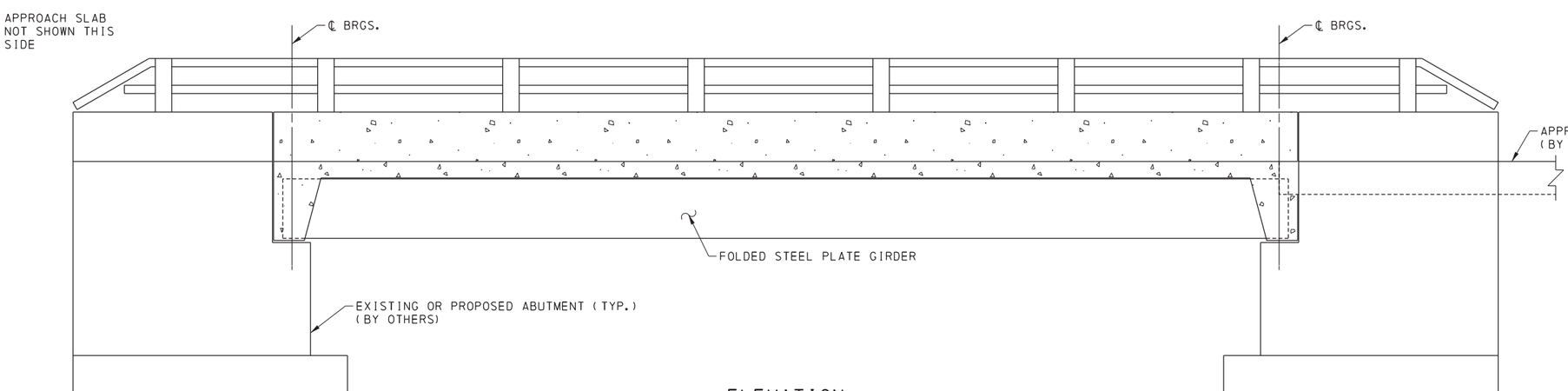

ELEVATION

NOTES:

1. FOR INDEX OF DRAWINGS AND SPECIFICATIONS, SEE SHEET NOS. 1 & 2.
2. FOR TYPICAL SECTION DETAILS, SEE SHEET NO. 4.
3. FOR GIRDER DETAILS, SEE SHEET NOS. 8 & 9.
4. FOR GIRDER PANEL LAYOUT, SEE SHEET NO. 5.
5. FOR DIAPHRAGM DETAILS, SEE SHEET NOS. 6 & 7.
6. FOR GIRDER TABLES, SEE SHEET NOS. 11-21.

PENNDOT DRAWING #14-604-BDTD (REV.1)

COMMONWEALTH OF PENNSYLVANIA
DEPARTMENT OF TRANSPORTATION
BUREAU OF PROJECT DELIVERY

CDR BRIDGE SYSTEMS, LLC

FOLDED STEEL PLATE GIRDER SYSTEM

GENERAL PLAN & ELEVATION

DESIGNER
CDR BRIDGE SYSTEMS
D.L. CLARK BUILDING, SUITE 610
503 MARTINDALE STREET
PITTSBURGH, PA 15212-5746
P: 412-322-0313
F: 412-322-2138
WEB: www.cdrbridges.com

DATE:	04/08/19
SCALE:	NOT TO SCALE
DESIGNED:	RTE
DRAWN:	RTE
CHECKED:	WES
CDR JOB #:	

9/19/2019

OPERATOR: Robert.Elliott
FILE PATH: P:\CDR BRIDGE\PROPOSALS\P3672.00-Folded_Steel_Plate_Girder\Design\USTN\PennDOT\03 FSPG_Plan&Elev.dgn

PLOTTED: 4/8/2019
8:02:16 AM

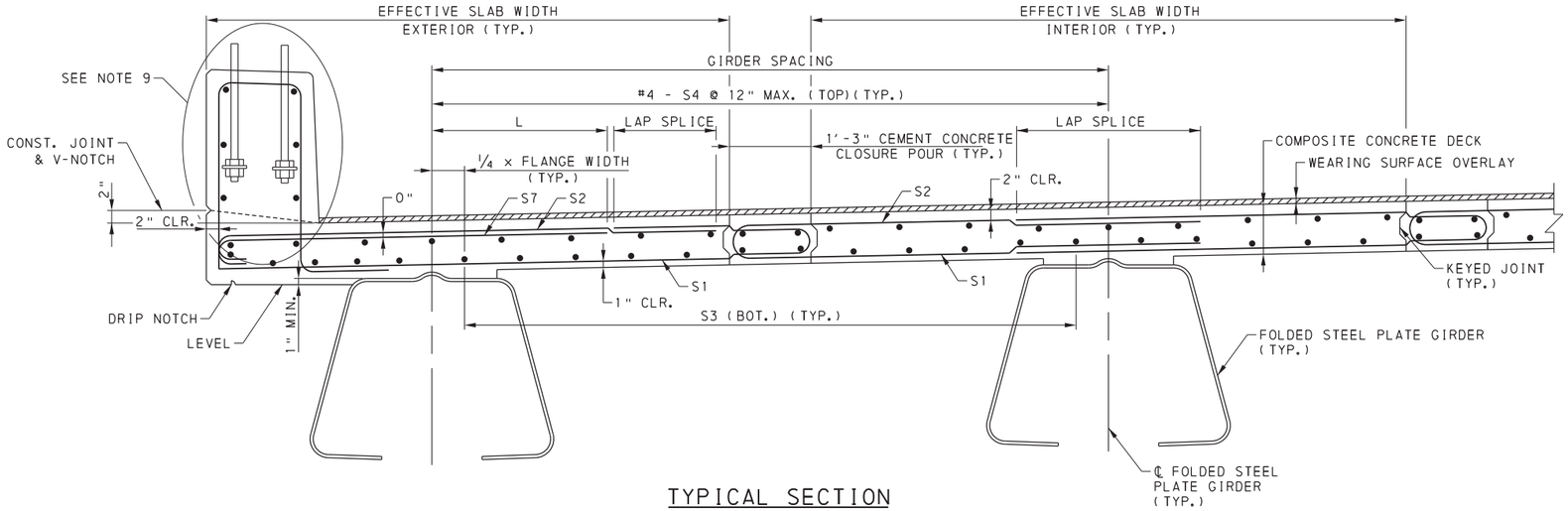

TYPICAL SECTION

(WITH 1'-3" CEMENT CONCRETE CLOSURE POUR)

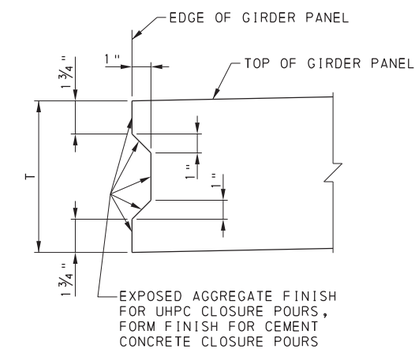

KEYED JOINT DETAIL

N.T.S.
(REBAR NOT SHOWN FOR CLARITY)

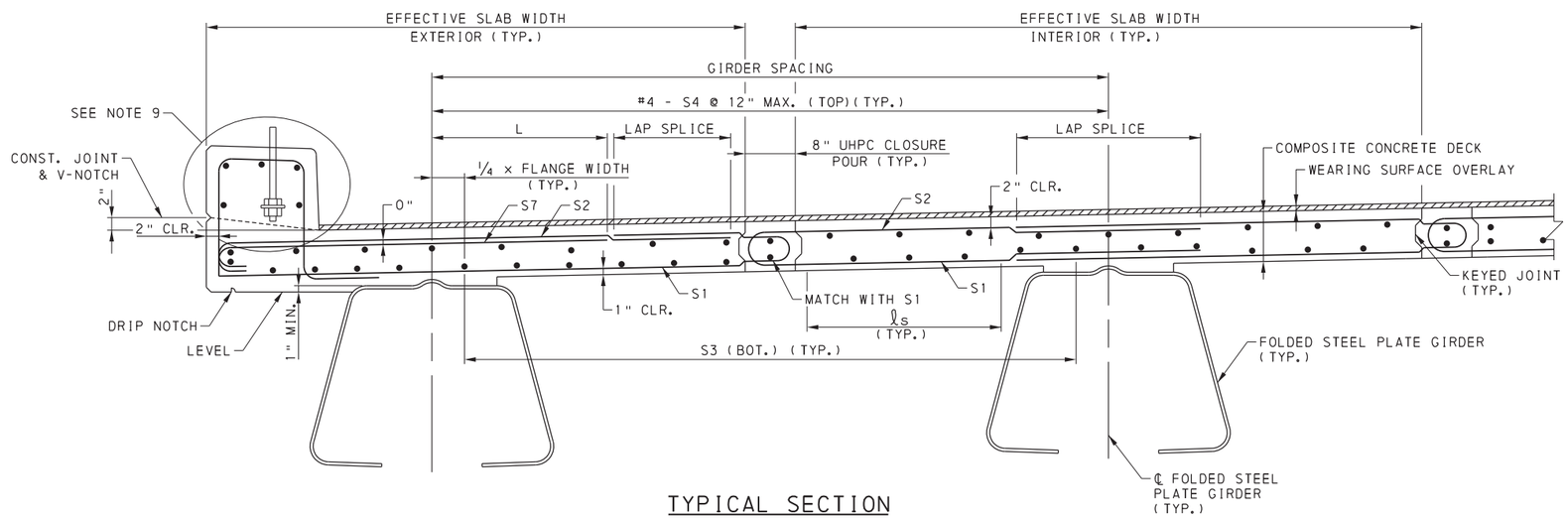

TYPICAL SECTION

(WITH 8" UHPC CLOSURE POUR)

NOTE: PA BRIDGE BARRIER AND PA TYPE 10M BRIDGE BARRIER SHOWN.
OTHER BARRIERS MAY BE ACCOMMODATED.

NOTES:

1. FOR INDEX OF DRAWINGS AND SPECIFICATIONS, SEE SHEET NOS. 1 & 2.
2. FOR GIRDER PANEL LAYOUT, SEE SHEET NO. 5
3. FOR GIRDER DETAILS, SEE SHEET NOS. 8 & 9.
4. FOR DIAPHRAGM DETAILS, SEE SHEET NOS. 6 & 7.
5. FOR DECK SLAB REINFORCEMENT, SEE STD. DWG. BD-601M.
6. FOR DECK SLAB DETAILS, SEE STD. DWG. BD-601M & BC-752M.
7. FOR HAUNCH REINFORCEMENT DETAILS, SEE STD. DWGS. BD-601M & BC-752M.
8. FOR DRIP NOTCH DETAILS, SEE STD. DWG. BC-752M & BC-775M.
9. FOR BARRIER DETAILS, SEE STD. DWG. BD-600M SERIES & BC-700M SERIES.

9/19/2019

DESIGNER
CDR BRIDGE SYSTEMS
D.L. CLARK BUILDING, SUITE 610
503 MARTINDALE STREET
PITTSBURGH, PA 15212-5746
P: 412-322-0313
F: 412-322-2138
WEB: www.cdrbridges.com

DATE:	04/08/19
SCALE:	NOT TO SCALE
DESIGNED:	RTE
DRAWN:	RTE
CHECKED:	WES
CDR JOB #:	

PENNDOT DRAWING #14-604-BDTD (REV.1)

COMMONWEALTH OF PENNSYLVANIA
DEPARTMENT OF TRANSPORTATION
BUREAU OF PROJECT DELIVERY

CDR BRIDGE SYSTEMS, LLC

FOLDED STEEL PLATE GIRDER SYSTEM

TYPICAL SECTIONS

OPERATOR: Robert.Elliott
FILE PATH: P:\CDR BRIDGE\PROPOSALS\P3672.00-Folded_Steel_Plate_Girder\Design\USTN\PennDOT\04 FSPG_Typical Sections.dgn

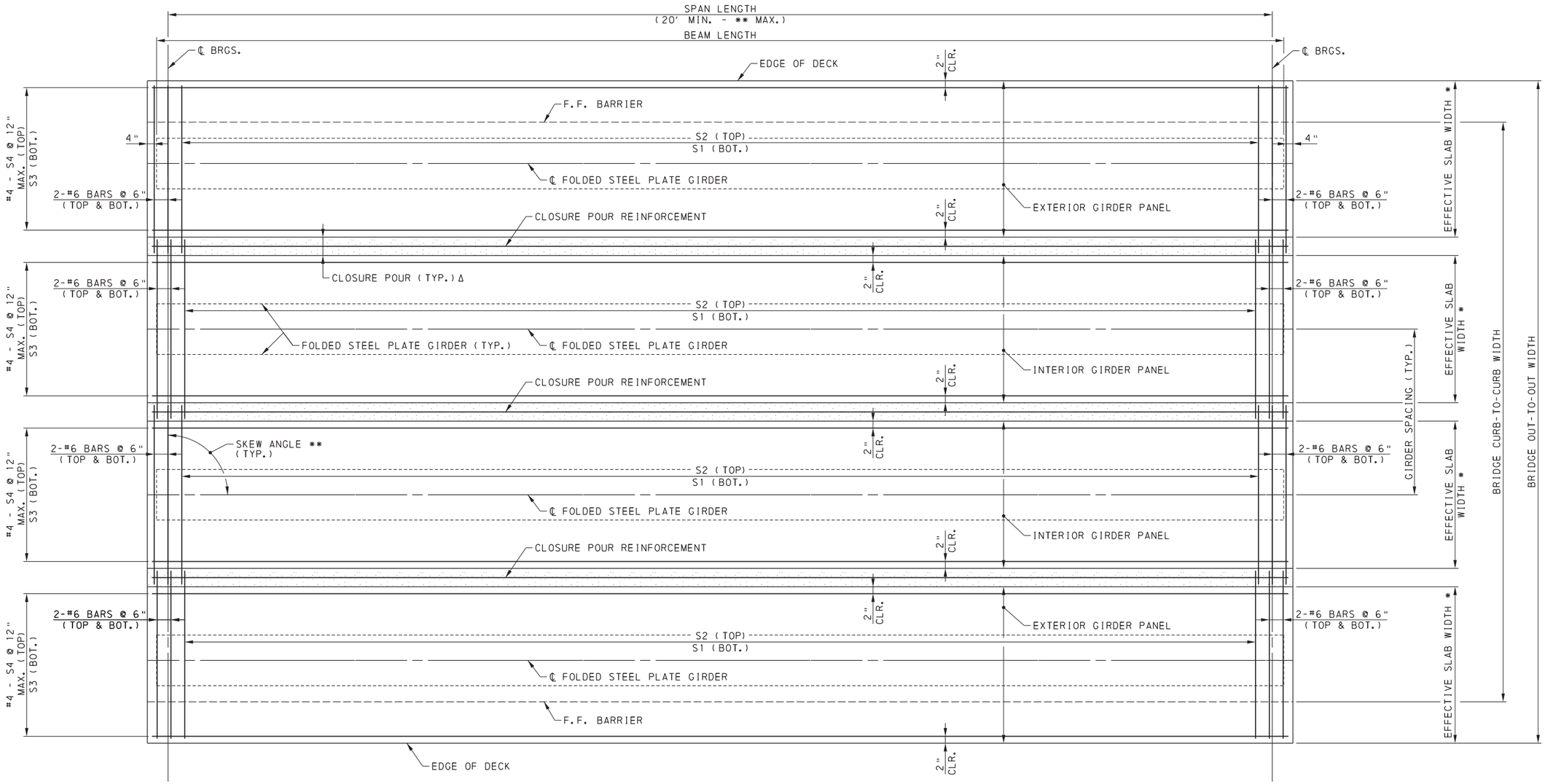

TYPICAL GIRDER PANEL LAYOUT

Δ 8" CLOSURE POUR SHOWN, THE 15" CLOSURE POUR IS SIMILAR.

	*MAX EFFECTIVE SLAB WIDTH	
	8" CLOSURE POUR	15" CLOSURE POUR
INTERIOR SLAB	10'-8"	9'-6"
EXTERIOR SLAB	11'-4"	10'-9"

*BASED ON 12' MAX SHIPPING WIDTH

** MAXIMUM SPAN LENGTH ALLOWABLE BASED ON SKEW	
PENNDOT SKEW	MAXIMUM SPAN LENGTH
90°	59'-0"
85°	58'-8 1/8"
80°	58'-4 1/8"
75°	58'-0 1/8"
70°	57'-7 7/8"
65°	57'-3 3/8"
60°	56'-10 1/2"
55°	56'-5 1/8"
50°	55'-11"
45°	55'-4"

9/19/2019

NOTES:

1. FOR INDEX OF DRAWINGS AND SPECIFICATIONS, SEE SHEET NOS. 1 & 2.
2. FOR TYPICAL SECTION DETAILS, SEE SHEET NO. 4.
3. FOR DIAPHRAGM DETAILS, SEE SHEET NOS. 6 & 7.
4. FOR GIRDER DETAILS, SEE SHEET NOS. 8 & 9.
5. FOR GIRDER TABLES, SEE SHEET NOS. 11-21.
6. FOR DECK SLAB REINFORCEMENT, SEE STD. DWG, BD-601M.

DESIGNER

CDR BRIDGE SYSTEMS
D.L. CLARK BUILDING, SUITE 610
503 MARTINDALE STREET
PITTSBURGH, PA 15212-5746
P: 412-322-0313
F: 412-322-2138
WEB: www.cdrbridges.com

DATE:	04/08/19
SCALE:	NOT TO SCALE
DESIGNED:	RTE
DRAWN:	RTE
CHECKED:	WES
CDR JOB #:	

PENNDOT DRAWING #14-604-BDTD (REV.1)

COMMONWEALTH OF PENNSYLVANIA
DEPARTMENT OF TRANSPORTATION
BUREAU OF PROJECT DELIVERY

CDR BRIDGE SYSTEMS, LLC

FOLDED STEEL PLATE GIRDER SYSTEM

GIRDER PANEL LAYOUT

PLOTTED: 4/8/2019 8:03:13 AM
OPERATOR: Robert.Elliott
FILE PATH: P:\CDR BRIDGE\PROPOSALS\P3672.00-Folded_Steel_Plate_Girder\Design\USTN\PennDOT\05 FSPG_Panel Plan View.dgn

PLOTTED: 4/8/2019
8:04:53 AM

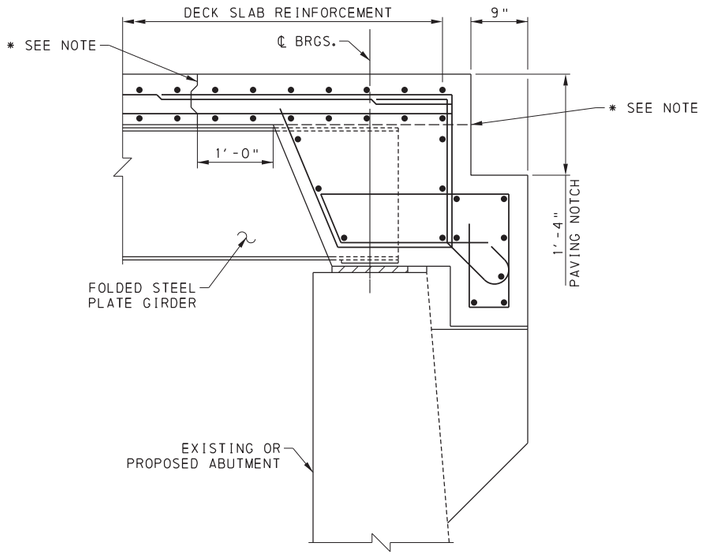

TYPE 1 APPROACH SLAB

FOR BEAM DEPTHS LESS THAN 2'-1½"

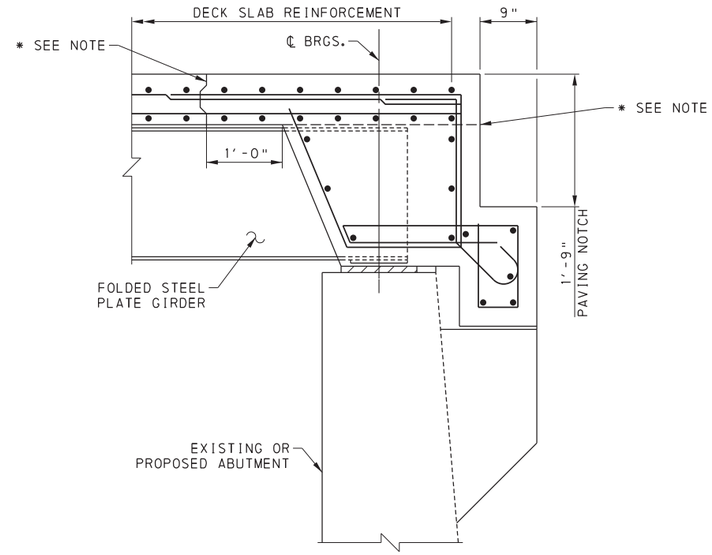

TYPE 2 APPROACH SLAB

FOR BEAM DEPTHS LESS THAN 2'-6½"

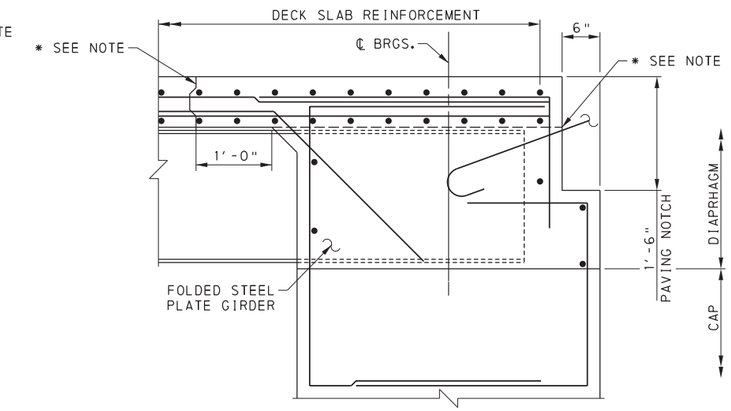

TYPE 5 APPROACH SLAB

FOR BEAM DEPTHS LESS THAN 2'-0"

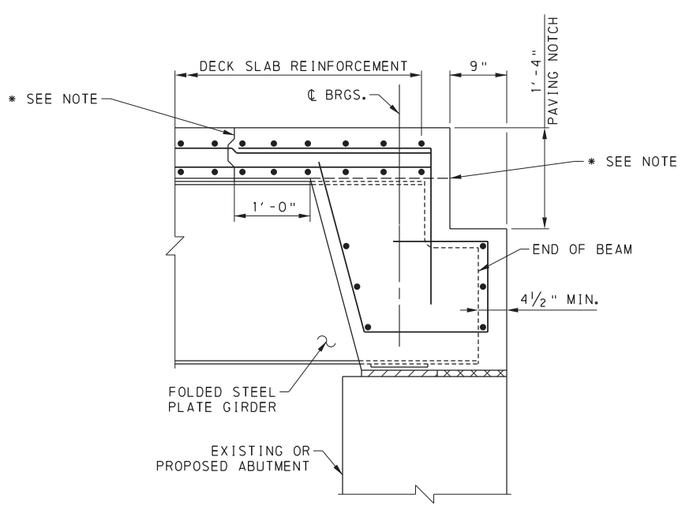

TYPE 1 APPROACH SLAB

FOR BEAM DEPTHS 2'-1½" AND GREATER

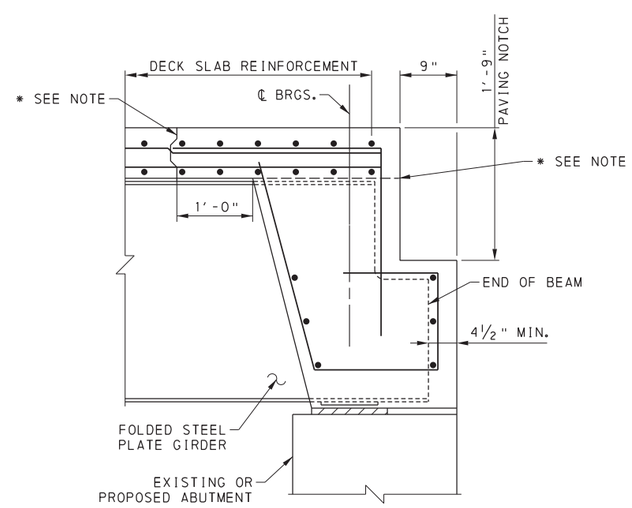

TYPE 2 APPROACH SLAB

FOR BEAM DEPTHS 2'-6½" AND GREATER

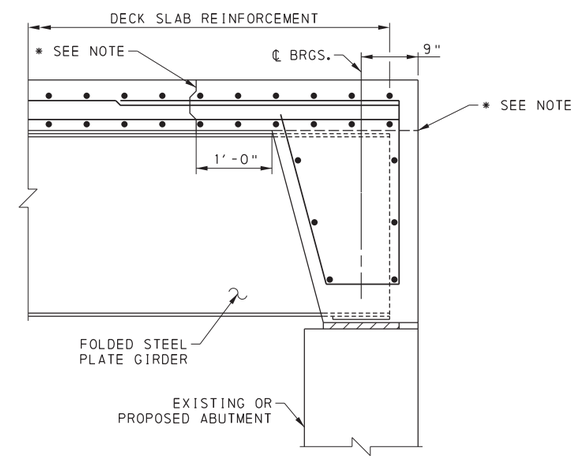

FULL DEPTH END DIAPHRAGM WITHOUT BACKWALL AND PAVING NOTCH

* NOTE: FOR PRECAST CONCRETE END DIAPHRAGMS, PROVIDE CONSTRUCTION JOINT AT THE UNDERSIDE OF DECK SLAB. FOR CAST-IN-PLACE CONCRETE END DIAPHRAGMS, PROVIDE VERTICAL CONSTRUCTION JOINT AT 1'-0" FROM FACE OF END DIAPHRAGM.

NOTES:

1. FOR INDEX OF DRAWINGS AND SPECIFICATIONS, SEE SHEET NOS. 1 & 2.
2. FOR TYPICAL SECTION DETAILS, SEE SHEET NO. 4.
3. FOR GIRDER PANEL LAYOUT, SEE SHEET NO. 5.
4. FOR ADDITIONAL DIAPHRAGM DETAILS, SEE SHEET NO. 7.
6. FOR GIRDER DETAILS, SEE SHEET NOS. 8 & 9.
7. FOR GIRDER TABLES, SEE SHEET NOS. 11-21.
8. FOR ADDITIONAL END DIAPHRAGM DETAILS, SEE STD. DWG. BD-611M, BD-628M AND BD-667M.
9. FOR ADDITIONAL APPROACH SLAB DETAILS, SEE STD. DWG. BD-628M.
10. FOR WATERPROOFING DETAILS, SEE STD. DWG. BC-788M.

9/19/2019

DESIGNER
CDR BRIDGE SYSTEMS
D.L. CLARK BUILDING, SUITE 610
503 MARTINDALE STREET
PITTSBURGH, PA 15212-5746
P: 412-322-0313
F: 412-322-2138
WEB: www.cdrbridges.com

DATE:	04/08/19
SCALE:	NOT TO SCALE
DESIGNED:	RTE
DRAWN:	RTE
CHECKED:	WES
CDR JOB #:	

PENNDOT DRAWING #14-604-BDTD (REV.1)

COMMONWEALTH OF PENNSYLVANIA
DEPARTMENT OF TRANSPORTATION
BUREAU OF PROJECT DELIVERY

CDR BRIDGE SYSTEMS, LLC

FOLDED STEEL PLATE GIRDER SYSTEM

DIAPHGRAGM DETAILS - 1

OPERATOR: Robert.Elliott
FILE PATH: P:\CDR BRIDGE\PROPOSALS\P3672.00-Folded_Steel_Plate_Girder\Design\USTN\PennDOT\06 FSPG Diaphragm Details_1.dgn

PLOTTED: 4/8/2019
8:05:23 AM

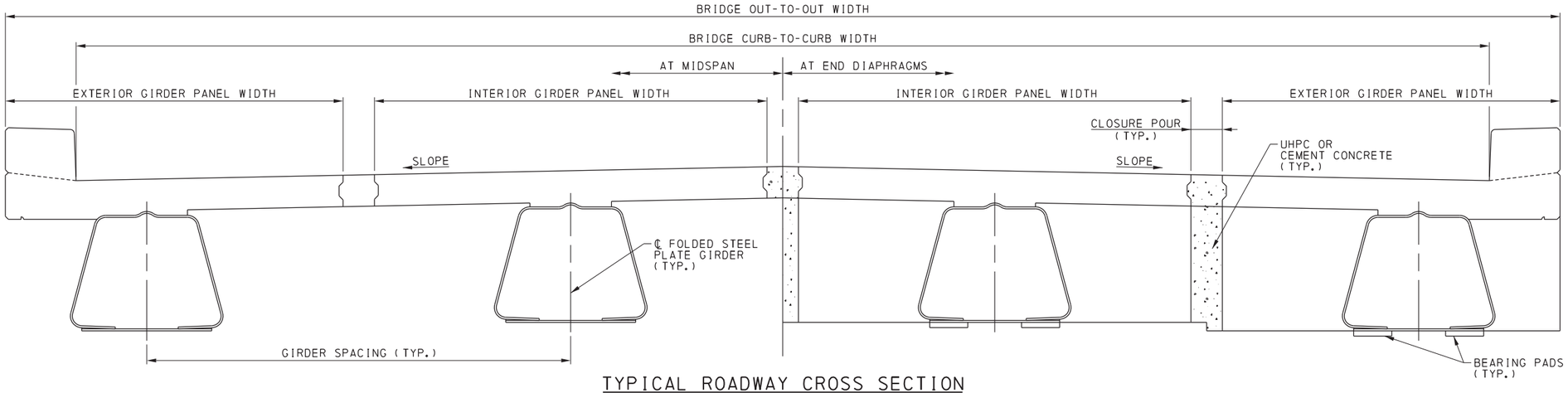

TYPICAL ROADWAY CROSS SECTION

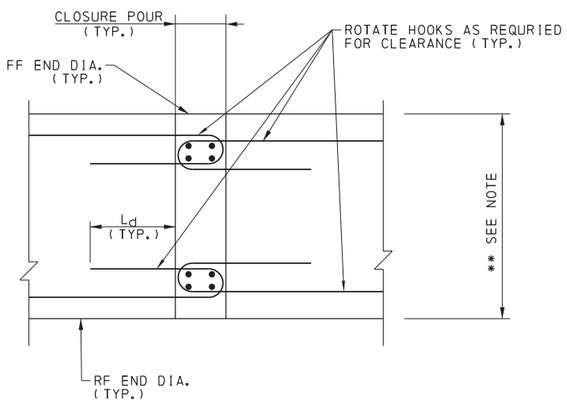

SECTION A-A

** NOTE: 4'-0" FOR INTEGRAL ABUTMENTS, 1'-3" (MIN.) & VARIES FOR CONCRETE END DIAPHRAGMS USED IN SIMPLY SUPPORTED APPLICATIONS.

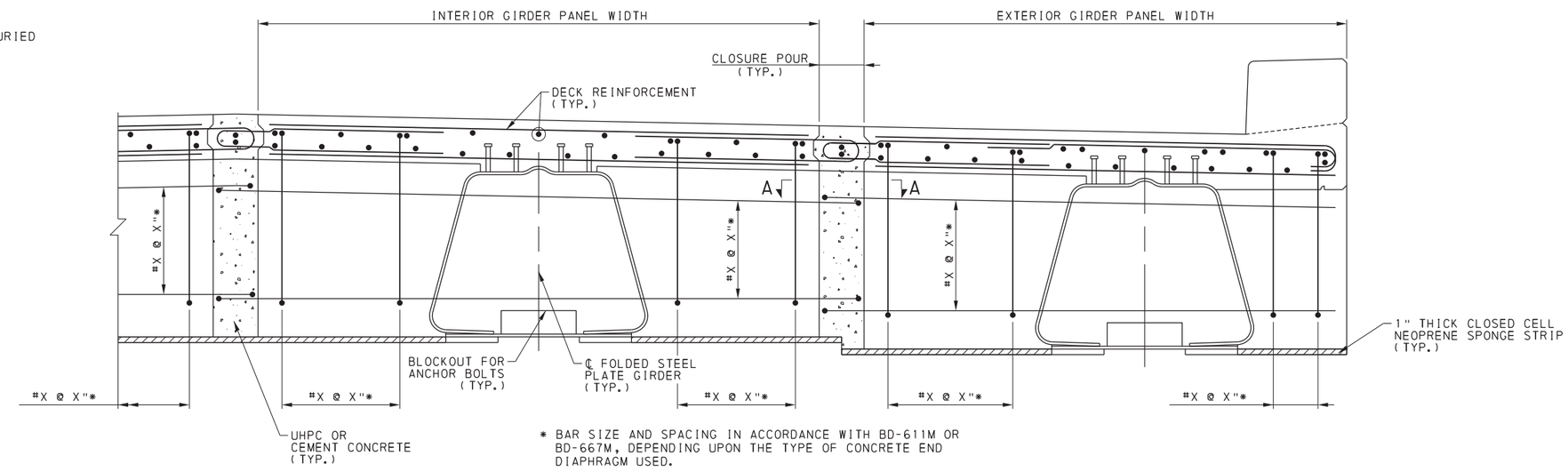

* BAR SIZE AND SPACING IN ACCORDANCE WITH BD-611M OR BD-667M, DEPENDING UPON THE TYPE OF CONCRETE END DIAPHRAGM USED.

END DIAPHRAGM ELEVATION

NOTES:

1. FOR INDEX OF DRAWINGS AND SPECIFICATIONS, SEE SHEET NOS. 1 & 2.
2. FOR TYPICAL SECTION DETAILS, SEE SHEET NO. 4.
3. FOR GIRDER PANEL LAYOUT, SEE SHEET NO. 5.
4. FOR ADDITIONAL DIAPHRAGM DETAILS, SEE SHEET NO. 6.
6. FOR GIRDER DETAILS, SEE SHEET NOS. 8 & 9.
7. FOR GIRDER TABLES, SEE SHEET NOS. 11-21.
8. FOR ADDITIONAL END DIAPHRAGM DETAILS, SEE STD. DWG. BD-611M, BD-628M AND BD-667M.
9. FOR ADDITIONAL APPROACH SLAB DETAILS, SEE STD. DWG. BD-628M.
10. FOR WATERPROOFING DETAILS, SEE STD. DWG. BC-788M.

9/19/2019

DESIGNER		
CDR BRIDGE SYSTEMS D.L. CLARK BUILDING, SUITE 610 503 MARTINDALE STREET PITTSBURGH, PA 15212-5746 P: 412-322-0313 F: 412-322-2138 WEB: www.cdrbridges.com	DATE:	04/08/19
	SCALE:	NOT TO SCALE
	DESIGNED:	RTE
	DRAWN:	RTE
	CHECKED:	WES
	CDR JOB #:	

PENNDOT DRAWING #14-604-BDTD (REV.1)

COMMONWEALTH OF PENNSYLVANIA
DEPARTMENT OF TRANSPORTATION
BUREAU OF PROJECT DELIVERY

CDR BRIDGE SYSTEMS, LLC

FOLDED STEEL PLATE GIRDER SYSTEM

DIAPHRAGM DETAILS - 2

SHEET 7 OF 21

OPERATOR: Robert.Elliott
FILE PATH: P:\CDR BRIDGE\PROPOSALS\P3672.00-Folded_Steel_Plate_Girder\Design\USTN\PennDOT\07 FSPG Diaphragm Details.2.dgn

PLOTTED: 4/8/2019
8:05:52 AM

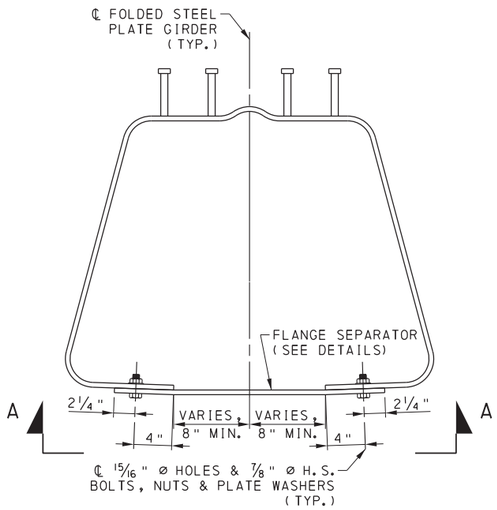

GIRDER SECTION AT FLANGE SEPARATOR

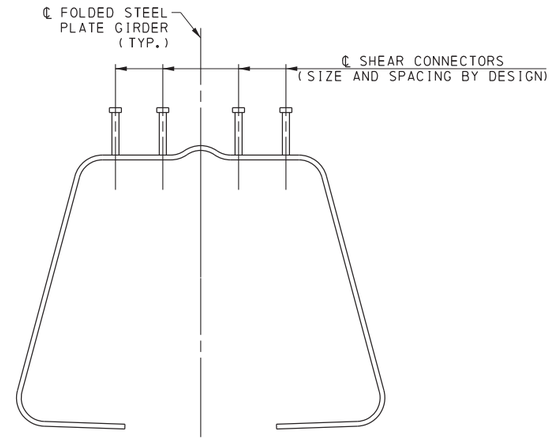

SHEAR CONNECTOR DETAIL

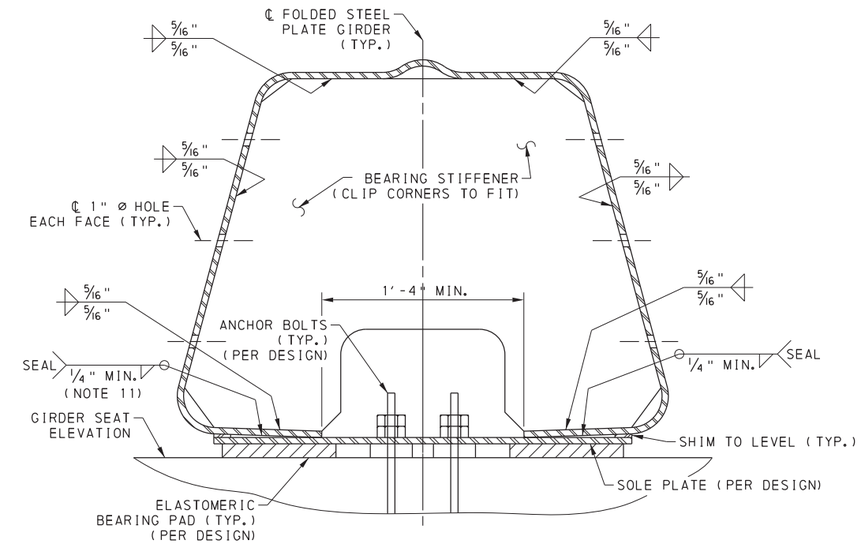

GIRDER SECTION AT ℄ BEARING - CONVENTIONAL ABUTMENT

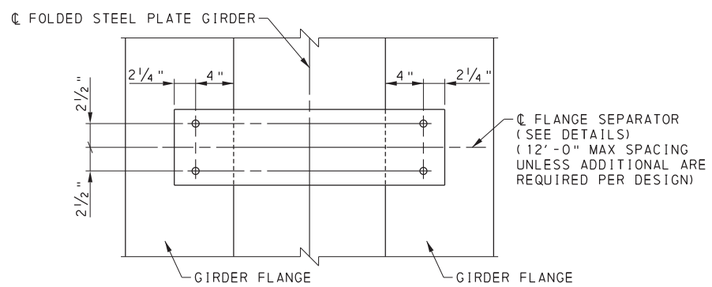

SECTION A-A

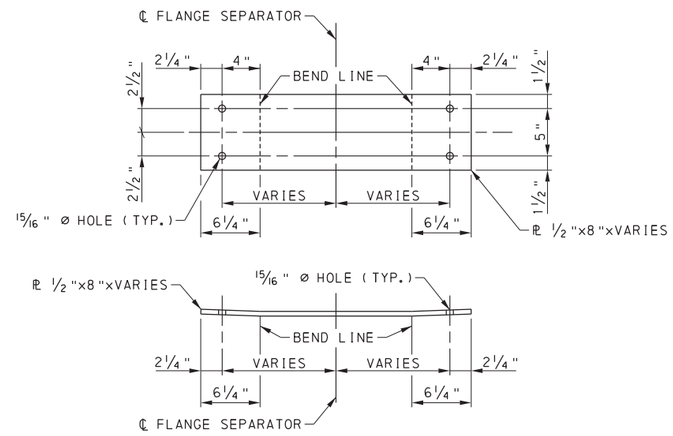

FLANGE SEPARATOR DETAILS

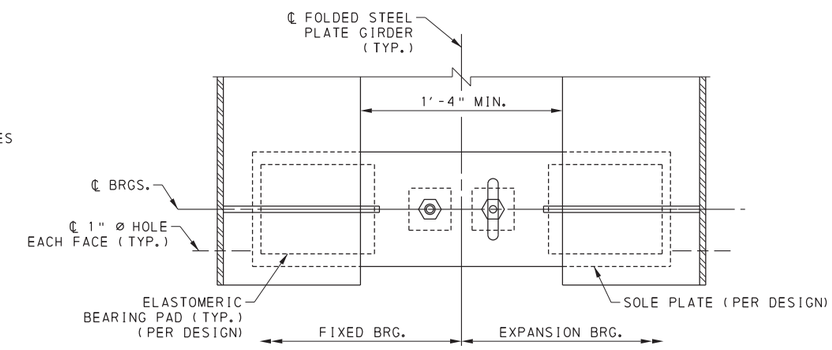

GIRDER PLAN VIEW AT BEARINGS - CONVENTIONAL ABUTMENT

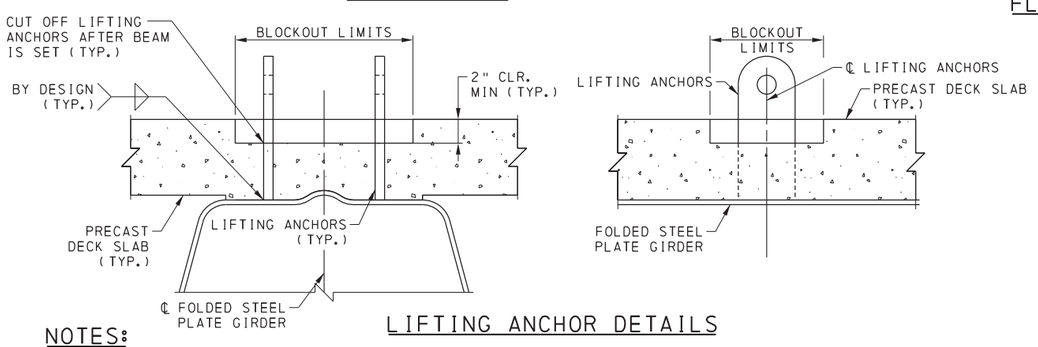

LIFTING ANCHOR DETAILS

NOTES:

1. FOR INDEX OF DRAWINGS AND SPECIFICATIONS, SEE SHEET NOS. 1 & 2.
2. FOR TYPICAL SECTION DETAILS, SEE SHEET NO. 4.
3. FOR GIRDER PANEL LAYOUT, SEE SHEET NO. 5.
4. FOR DIAPHRAGM DETAILS, SEE SHEET NOS. 6 & 7.
5. FOR ADDITIONAL GIRDER DETAILS, SEE SHEET NO. 9.
6. FOR GIRDER TOLERANCES, SEE SHEET NO. 10.
7. FOR GIRDER TABLES, SEE SHEET NOS. 11-21.
8. FOR ADDITIONAL SHEAR STUD DETAILS, SEE STD. DWG. BC-753M.
9. FOR ADDITIONAL BEARING STIFFENER DETAILS, SEE STD. DWG. BC-753M.
10. FOR ADDITIONAL BEARING DETAILS, SEE STD. DWG. BD-653M AND BC-755M.
11. FOR WELDING DETAILS AND REQUIREMENTS, SEE AWS D1.5.

9/19/2019

DESIGNER
CDR BRIDGE SYSTEMS
D.L. CLARK BUILDING, SUITE 610
503 MARTINDALE STREET
PITTSBURGH, PA 15212-5746
P: 412-322-0313
F: 412-322-2138
WEB: www.cdrbridges.com

DATE:	04/08/19
SCALE:	NOT TO SCALE
DESIGNED:	RTE
DRAWN:	RTE
CHECKED:	WES
CDR JOB #:	

PENNDOT DRAWING #14-604-BDTD (REV.1)

COMMONWEALTH OF PENNSYLVANIA
DEPARTMENT OF TRANSPORTATION
BUREAU OF PROJECT DELIVERY

CDR BRIDGE SYSTEMS, LLC

FOLDED STEEL PLATE GIRDER SYSTEM

GIRDER DETAILS - 1

OPERATOR: Robert.Elliott
FILE PATH: P:\CDR BRIDGE\PROPOSALS\P3672.00-Folded_Steel_Plate_Girder\Design\USTN\PennDOT\08 FSPG Beam Details_1.dgn

PLOTTED: 4/8/2019
8:06:17 AM

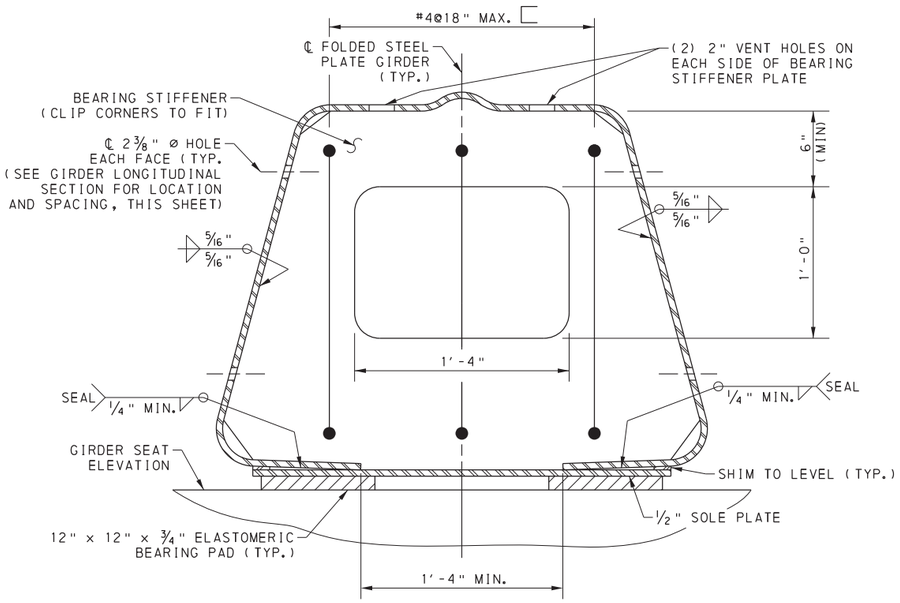

GIRDER SECTION AT ℄ BEARING - INTEGRAL ABUTMENT

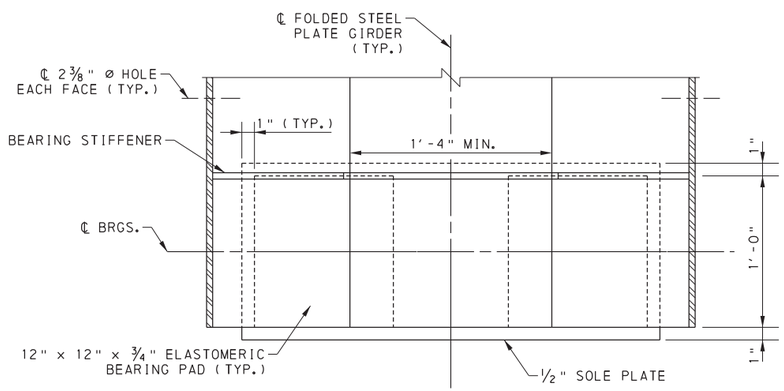

GIRDER PLAN VIEW AT BEARINGS - INTEGRAL ABUTMENT

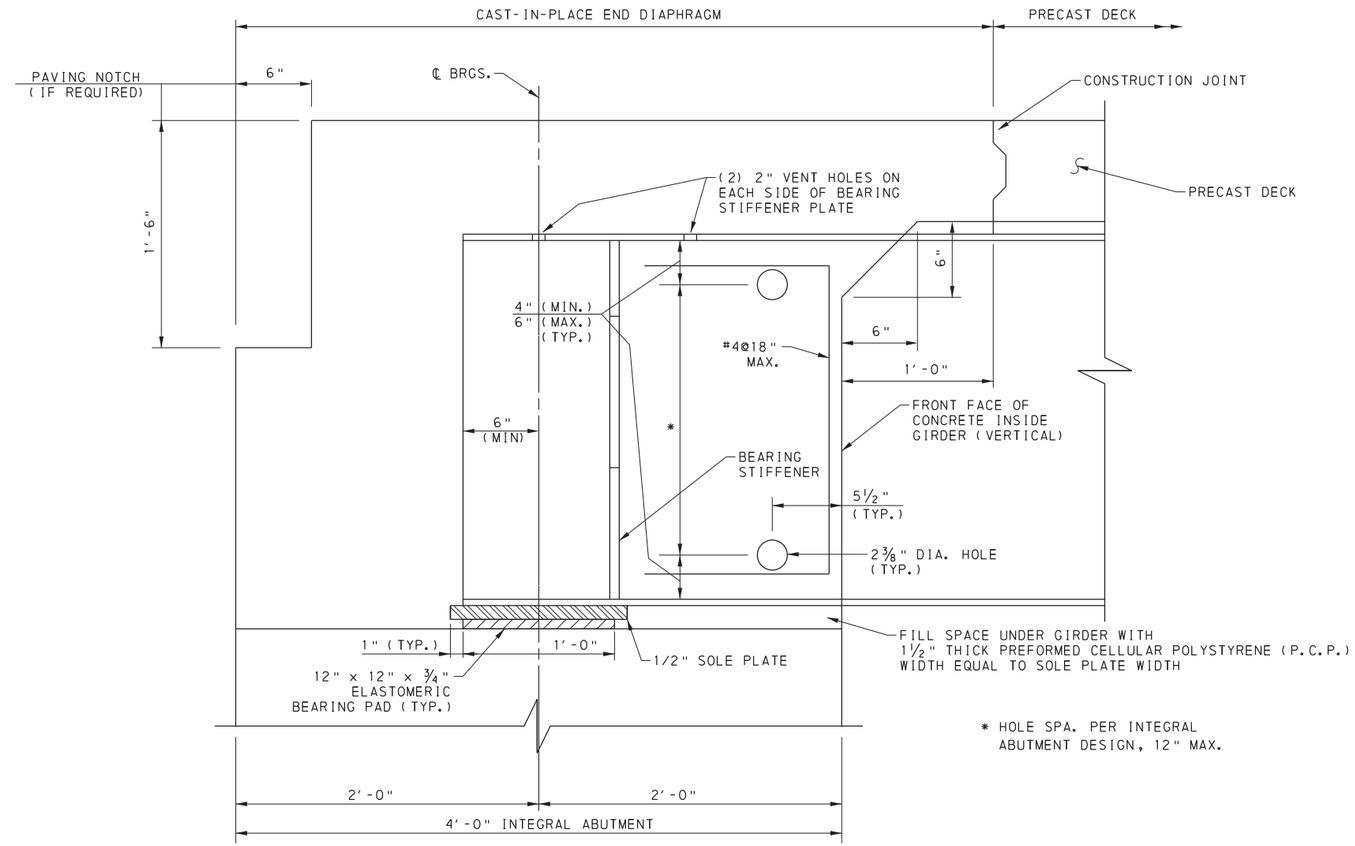

* HOLE SPA. PER INTEGRAL ABUTMENT DESIGN, 12" MAX.

GIRDER LONGITUDINAL SECTION - INTEGRAL ABUTMENT

NOTE:

THE DETAILS ON THIS SHEET APPLY TO INTEGRAL ABUTMENTS WITH CAST-IN-PLACE END DIAPHRAGMS ONLY.
IF PRECAST END DIAPRHAGMS ARE USED, DETAILS FOR ANCHORAGE AND/OR DOWELS MUST BE SUBMITTED FOR APPROVAL.

NOTES:

1. FOR INDEX OF DRAWINGS AND SPECIFICATIONS, SEE SHEET NOS. 1 & 2.
2. FOR TYPICAL SECTION DETAILS, SEE SHEET NO. 4.
3. FOR GIRDER PANEL LAYOUT, SEE SHEET NO. 5.
4. FOR DIAPHRAGM DETAILS, SEE SHEET NOS. 6 & 7.
5. FOR ADDITIONAL GIRDER DETAILS, SEE SHEET NO. 8.
6. FOR GIRDER TOLERANCES, SEE SHEET NO. 10.
7. FOR GIRDER TABLES, SEE SHEET NOS. 11-21.
8. FOR ADDITIONAL SHEAR STUD DETAILS, SEE STD. DWG. BC-753M.
9. FOR ADDITIONAL BEARING STIFFENER DETAILS, SEE STD. DWG. BC-753M.
10. FOR ADDITIONAL BEARING DETAILS, SEE STD. DWG. BD-653M AND BC-755M

9/19/2019

DESIGNER
CDR BRIDGE SYSTEMS
D.L. CLARK BUILDING, SUITE 610
503 MARTINDALE STREET
PITTSBURGH, PA 15212-5746
P: 412-322-0313
F: 412-322-2138
WEB: www.cdrbridges.com

DATE:	04/08/19
SCALE:	NOT TO SCALE
DESIGNED:	RTE
DRAWN:	RTE
CHECKED:	WES
CDR JOB #:	

PENNDOT DRAWING #14-604-BDTD (REV.1)

COMMONWEALTH OF PENNSYLVANIA
DEPARTMENT OF TRANSPORTATION
BUREAU OF PROJECT DELIVERY

CDR BRIDGE SYSTEMS, LLC
FOLDED STEEL PLATE GIRDER SYSTEM

GIRDER DETAILS - 2

OPERATOR: Robert.Elliott
FILE PATH: P:\CDR BRIDGE\PROPOSALS\P3672.00-Folded_Steel_Plate_Girder\Design\USTN\PennDOT\09 FSPG Beam Details_2.dgn

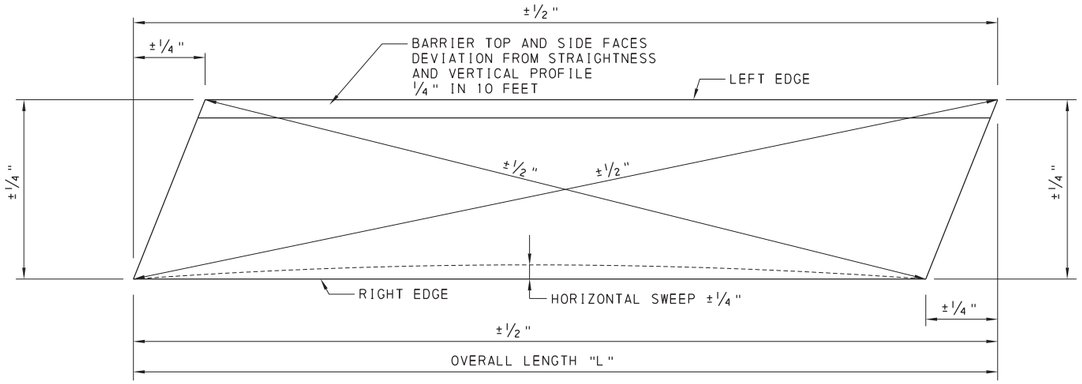

PLAN

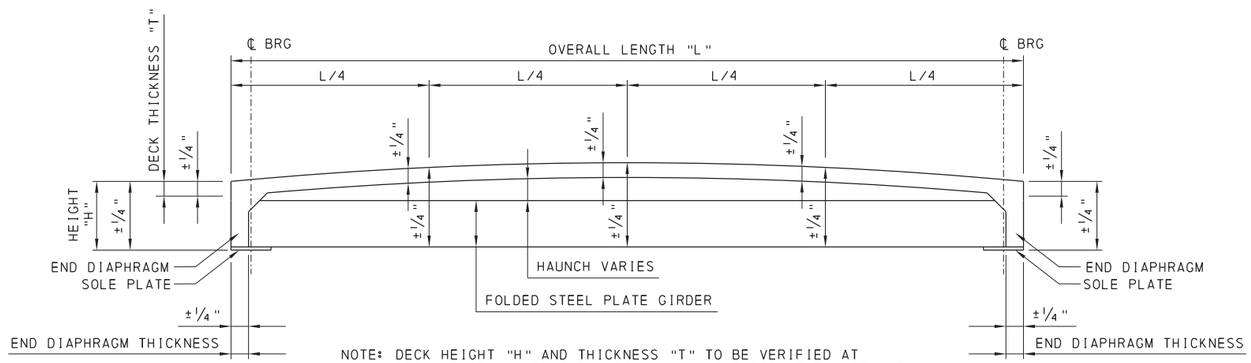

NOTE: DECK HEIGHT "H" AND THICKNESS "T" TO BE VERIFIED AT DECK LENGTH QUARTER POINTS "L/4" ALONG BOTH THE LEFT AND RIGHT EDGES AND AT ANY CROSS SLOPE BREAK POINTS ON THE DECK.

ELEVATION

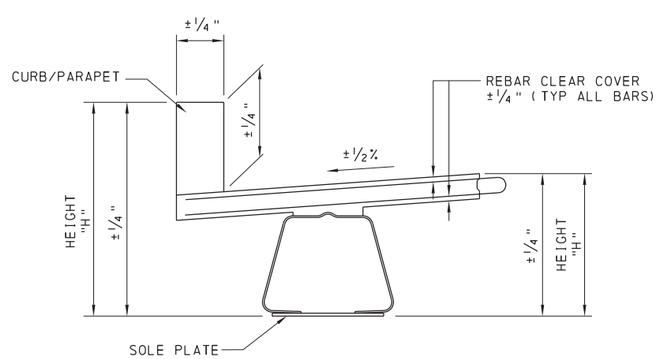

SECTION

PRECAST COMPOSITE CONCRETE DECK TOLERANCES

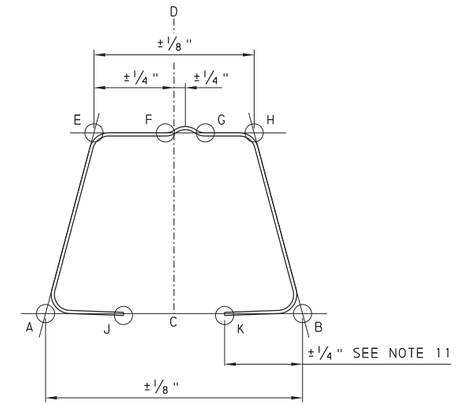

NOTE: TOLERANCES SHOWN APPLY TO THE GIRDER BETWEEN THE BEARING STIFFENER PLATES. SEE ALLOWABLE FLARE DIMENSIONS FOR AREAS AT ENDS OF GIRDER

FOLDED STEEL PLATE GIRDER TOLERANCES

TOLERANCES:

1. ESTABLISH BASELINE BETWEEN BOTTOM TANGENT POINTS (A-B)
2. DETERMINE MIDPOINT ON BASELINE (C)
3. ESTABLISH PERPENDICULAR REFERENCE LINE (C-D)
4. VERTICAL DISTANCE FROM BASELINE TOLERANCE:
   E AND H: ±1/8"
   F AND G: +1/2"/-0"
   J AND K: ±1/4"
5. MAX HEIGHT DIFFERENCE OF POINTS F AND G SHALL BE 1/8"
6. OVERALL BOTTOM WIDTH TOLERANCE APPLIES TO BEARING STIFFENER AND FLANGE SEPARATOR LOCATIONS
7. SWEEP TOLERANCE IS ±1/8"/12'-0" (MAX. 1/2")
8. SOLE PLATE FLATNESS ±1/8"
9. POSITIVE CAMBER +1/4"/-0" (EXCLUSIVE OF SELF WEIGHT DEFLECTION)
10. TWIST ±1/8"/12'-0" (MAX. 1/2")
11. COMBINED WIDTH TOLERANCE FOR BOTH BOTTOM FLANGES IS +1/2"/-1/4"
12. CAMBER, SWEEP, AND TWIST TOLERANCES ARE TO BE MEASURED WITH FSPG IN UPRIGHT POSITION SUPPORTED AT ℄ BEARINGS AND SUPPORTED ON BLOCKING SPACED AT 5FT MAX ALONG THE LENGTH OF THE GIRDER.

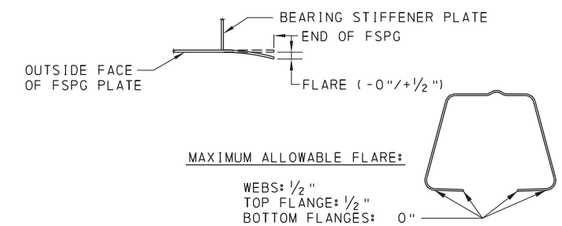

MAXIMUM ALLOWABLE FLARE:

WEBS: 1/2"
TOP FLANGE: 1/2"
BOTTOM FLANGES: 0"

ANY FLARE PRESENT AT BOTTOM FLANGES MUST BE STRAIGHTENED SO THAT SOLE PLATES CAN BE ATTACHED PER THE DETAILS ON SHEETS 8 AND 9.

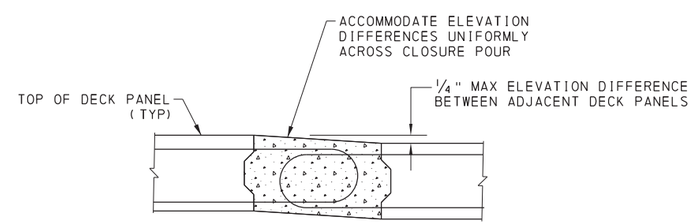

ERECTION TOLERANCE DETAIL

N.T.S.

NOTES:

1. FOR INDEX OF DRAWINGS AND SPECIFICATIONS, SEE SHEET NOS. 1 & 2.
2. FOR DIAPHRAGM DETAILS, SEE SHEET NOS. 6 & 7.
3. FOR GIRDER DETAILS, SEE SHEET NOS. 8 & 9.
4. FOR GIRDER TABLES, SEE SHEET NOS. 11-21.

PENNDOT DRAWING #14-604-BDTD (REV.1)

COMMONWEALTH OF PENNSYLVANIA
DEPARTMENT OF TRANSPORTATION
BUREAU OF PROJECT DELIVERY

CDR BRIDGE SYSTEMS, LLC

FOLDED STEEL PLATE GIRDER SYSTEM

GIRDER TOLERANCES

9/19/2019

DESIGNER
CDR BRIDGE SYSTEMS
D.L. CLARK BUILDING, SUITE 610
503 MARTINDALE STREET
PITTSBURGH, PA 15212-5746
P: 412-322-0313
F: 412-322-2138
WEB: www.cdrbridges.com

DATE:	04/08/19
SCALE:	NOT TO SCALE
DESIGNED:	RTE
DRAWN:	RTE
CHECKED:	WES
CDR JOB #:	

PLOTTED: 4/8/2019 8:06:43 AM
OPERATOR: Robert.Elliott
FILE PATH: P:\CDR BRIDGE\PROPOSALS\P3672.00-Folded_Steel_Plate_Girder\Design\USTN\PennDOT\10 FSPG Tolerances.dgn

FSPG DESIGNATION: W36 H16 016 A77

NON-COMPOSITE SECTION PROPERTIES			
I_{xx}	S_x TOP	S_x BOT.	r_x
1295 in^4	182.6 in^3	139.5 in^3	6.70 in

N=8 COMPOSITE SECTION PROPERTIES	EFFECTIVE SLAB WIDTH				
	6'-0"	7'-0"	8'-0"	9'-0"	10'-0"
I_{xx}	3980 in^4	4139 in^4	4278 in^4	4401 in^4	4514 in^4
S_x TOP SLAB	567.6 in^3	620.4 in^3	668.9 in^3	713.7 in^3	755.5 in^3
S_x TOP STEEL	-8154.3 in^3	-4995.5 in^3	-3872.5 in^3	-3301.9 in^3	-2959.7 in^3
S_x BOT. STEEL	236.0 in^3	240.6 in^3	244.7 in^3	248.6 in^3	252.2 in^3

NOTE: NEGATIVE S_x TOP STEEL INDICATES TOP FLANGE IS BELOW NEUTRAL AXIS

3N=24 COMPOSITE SECTION PROPERTIES	EFFECTIVE SLAB WIDTH				
	6'-0"	7'-0"	8'-0"	9'-0"	10'-0"
I_{xx}	2880 in^4	3027 in^4	3158 in^4	3275 in^4	3381 in^4
S_x TOP SLAB	292.1 in^3	320.5 in^3	347.6 in^3	373.6 in^3	398.5 in^3
S_x TOP STEEL	1220.5 in^3	1556.1 in^3	1993.9 in^3	2588.5 in^3	3440.9 in^3
S_x BOT. STEEL	205.5 in^3	209.8 in^3	213.5 in^3	216.7 in^3	219.6 in^3

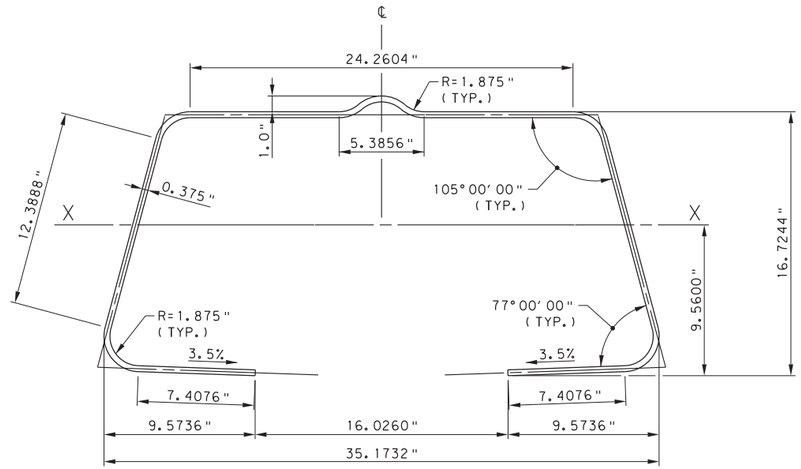

MOMENT CAPACITY	EFFECTIVE SLAB WIDTH				
	6'-0"	7'-0	8'-0"	9'-0"	10'-0"
PLASTIC, M_p	1403 KIP-FT	1453 KIP-FT	1490 KIP-FT	1519 KIP-FT	1543 KIP-FT
NOMINAL, M_n	1260 KIP-FT	1341 KIP-FT	1403 KIP-FT	1452 KIP-FT	1492 KIP-FT

EQUIVALENT PLATE GIRDER FOR STLRFD

TOP FLANGE: 27.5" x 0.375"
WEB: 15.625" x 0.776"
BOTTOM FLANGE: 17.0" x 0.375"

3/8" PLATE INFORMATION

PLATE WIDTH ALONG ℄ PLATE: 77.15 in
AREA: 28.93 in^2
WEIGHT: 98.44 plf

NON-COMPOSITE SECTION PROPERTIES			
I_{xx}	S_x TOP	S_x BOT.	r_x
1672 in^4	236.9 in^3	177.0 in^3	6.66 in

N=8 COMPOSITE SECTION PROPERTIES	EFFECTIVE SLAB WIDTH				
	6'-0"	7'-0"	8'-0"	9'-0"	10'-0"
I_{xx}	4806 in^4	5011 in^4	5190 in^4	5348 in^4	5490 in^4
S_x TOP SLAB	628.8 in^3	689.5 in^3	745.8 in^3	798.3 in^3	847.4 in^3
S_x TOP STEEL	33724.5 in^3	-21545.5 in^3	-9579.6 in^3	-6676.8 in^3	-5375.0 in^3
S_x BOT. STEEL	293.8 in^3	299.5 in^3	304.5 in^3	309.1 in^3	313.3 in^3

NOTE: NEGATIVE S_x TOP STEEL INDICATES TOP FLANGE IS BELOW NEUTRAL AXIS

3N=24 COMPOSITE SECTION PROPERTIES	EFFECTIVE SLAB WIDTH				
	6'-0"	7'-0"	8'-0"	9'-0"	10'-0"
I_{xx}	3416 in^4	3595 in^4	3756 in^4	3902 in^4	4035 in^4
S_x TOP SLAB	324.1 in^3	354.4 in^3	383.7 in^3	411.9 in^3	439.1 in^3
S_x TOP STEEL	1124.3 in^3	1360.7 in^3	1640.7 in^3	1977.2 in^3	2388.9 in^3
S_x BOT. STEEL	253.7 in^3	259.4 in^3	264.3 in^3	268.6 in^3	272.5 in^3

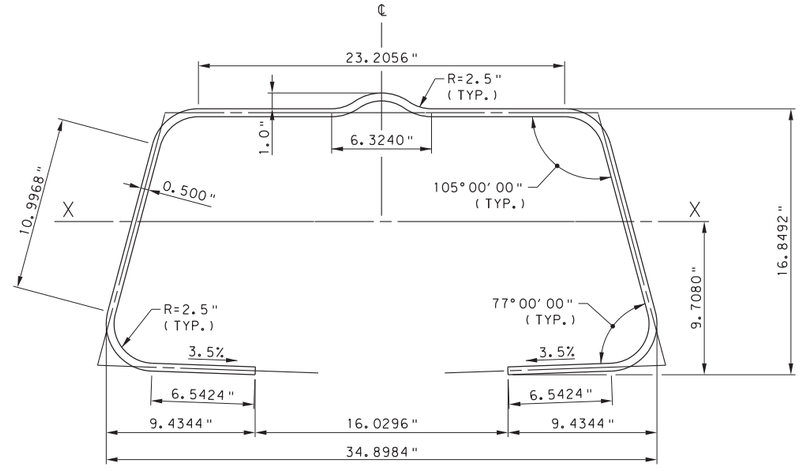

MOMENT CAPACITY	EFFECTIVE SLAB WIDTH				
	6'-0"	7'-0	8'-0"	9'-0"	10'-0"
PLASTIC, M_p	1691 KIP-FT	1776 KIP-FT	1840 KIP-FT	1890 KIP-FT	1930 KIP-FT
NOMINAL, M_n	1439 KIP-FT	1560 KIP-FT	1660 KIP-FT	1740 KIP-FT	1806 KIP-FT

EQUIVALENT PLATE GIRDER FOR STLRFD

TOP FLANGE: 27.5" x 0.5"
WEB: 15.5" x 1.035"
BOTTOM FLANGE: 16.0" x 0.5"

1/2" PLATE INFORMATION

PLATE WIDTH ALONG ℄ PLATE: 75.78 in
AREA: 37.89 in^2
WEIGHT: 128.92 plf

PENNDOT DRAWING #14-604-BDTD (REV.1)

NOTES:

1. FOR INDEX OF DRAWINGS AND SPECIFICATIONS, SEE SHEET NOS. 1 & 2.
2. PLASTIC MOMENT CALCULATED BASED AASHTO 6.10.7.1.2 (COMPOSITE COMPACT SECTION IN POSITIVE FLEXURE).
3. SECTION PROPERTIES BASED ON A CONCRETE STRENGTH OF 4 KSI AND ASTM A709, GRADE 50 STEEL.
4. SECTION PROPERTIES CONSIDER 8" THICK CONCRETE DECK WITH 1/2" INTEGRAL WEARING SURFACE & 0" HAUNCH.
5. SECTION PROPERTIES ASSUME BOTTOM FLANGES ARE LEVEL.
6. COMPOSITE SECTION PROPERTIES ARE BASED ON EFFECTIVE SLAB WIDTH EXCLUDING THE CLOSURE POUR.

9/19/2019

DESIGNER
CDR BRIDGE SYSTEMS
D.L. CLARK BUILDING, SUITE 610
503 MARTINDALE STREET
PITTSBURGH, PA 15212-5746
P: 412-322-0313
F: 412-322-2138
WEB: www.cdrbridges.com

DATE:	04/08/19
SCALE:	NOT TO SCALE
DESIGNED:	RTE
DRAWN:	RTE
CHECKED:	WES
CDR JOB #:	

COMMONWEALTH OF PENNSYLVANIA
DEPARTMENT OF TRANSPORTATION
BUREAU OF PROJECT DELIVERY

CDR BRIDGE SYSTEMS, LLC
FOLDED STEEL PLATE GIRDER SYSTEM

GIRDER TABLES - 1

PLOTTED: 4/8/2019 8:07:26 AM
OPERATOR: Robert.Elliott
FILE PATH: P:\CDR BRIDGE\PROPOSALS\P3672.00-Folded.Steel.Plate.Girder\Design\USTN\PennDOT\11-21 Beam Tables.dgn

FSPG DESIGNATION: W36 H18 016 A77

NON-COMPOSITE SECTION PROPERTIES			
I_{xx}	S_x TOP	S_x BOT.	r_x
1656 in^4	203.8 in^3	161.7 in^3	7.43 in

N=8 COMPOSITE SECTION PROPERTIES	EFFECTIVE SLAB WIDTH				
	6'-0"	7'-0"	8'-0"	9'-0"	10'-0"
I_{xx}	4894 in^4	5082 in^4	5244 in^4	5387 in^4	5516 in^4
S_x TOP SLAB	659.5 in^3	721.6 in^3	778.7 in^3	831.5 in^3	880.7 in^3
S_x TOP STEEL	-62681.6 in^3	-11114.4 in^3	-6851.3 in^3	-5277.4 in^3	-4463.2 in^3
S_x BOT. STEEL	265.2 in^3	269.9 in^3	274.0 in^3	277.8 in^3	281.3 in^3

NOTE: NEGATIVE S_x TOP STEEL INDICATES TOP FLANGE IS BELOW NEUTRAL AXIS

3N=24 COMPOSITE SECTION PROPERTIES	EFFECTIVE SLAB WIDTH				
	6'-0"	7'-0"	8'-0"	9'-0"	10'-0"
I_{xx}	3568 in^4	3746 in^4	3905 in^4	4047 in^4	4175 in^4
S_x TOP SLAB	338.0 in^3	370.8 in^3	402.2 in^3	432.4 in^3	461.4 in^3
S_x TOP STEEL	1167.0 in^3	1438.2 in^3	1767.6 in^3	2176.1 in^3	2695.3 in^3
S_x BOT. STEEL	232.9 in^3	237.6 in^3	241.6 in^3	245.0 in^3	248.1 in^3

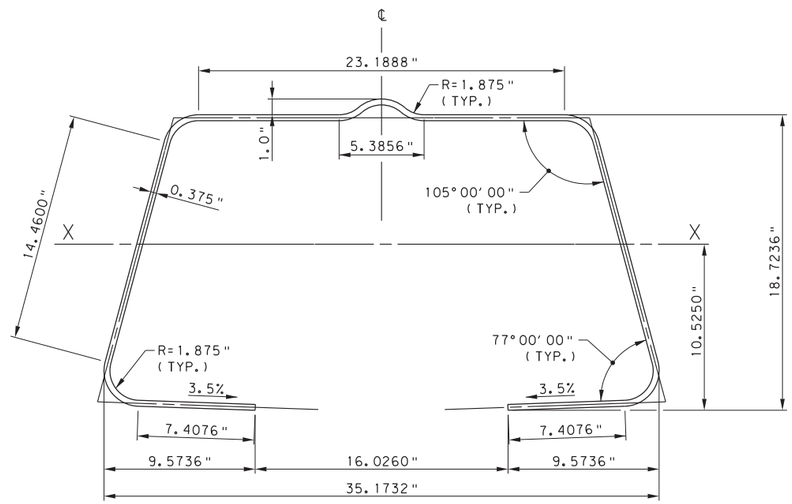

MOMENT CAPACITY	EFFECTIVE SLAB WIDTH				
	6'-0"	7'-0	8'-0"	9'-0"	10'-0"
PLASTIC, M_p	1574 KIP-FT	1628 KIP-FT	1668 KIP-FT	1700 KIP-FT	1725 KIP-FT
NOMINAL, M_n	1425 KIP-FT	1512 KIP-FT	1579 KIP-FT	1632 KIP-FT	1675 KIP-FT

EQUIVALENT PLATE GIRDER FOR STLRFD

TOP FLANGE: 26.25" x 0.375"
WEB: 17.625" x 0.776"
BOTTOM FLANGE: 17.0" x 0.375"

3/8" PLATE INFORMATION

PLATE WIDTH ALONG ℄ PLATE: 80.22 in
AREA: 30.08 in^2
WEIGHT: 102.36 plf

NON-COMPOSITE SECTION PROPERTIES			
I_{xx}	S_x TOP	S_x BOT.	r_x
2140 in^4	264.6 in^3	205.6 in^3	7.38 in

N=8 COMPOSITE SECTION PROPERTIES	EFFECTIVE SLAB WIDTH				
	6'-0"	7'-0"	8'-0"	9'-0"	10'-0"
I_{xx}	5925 in^4	6171 in^4	6383 in^4	6570 in^4	6737 in^4
S_x TOP SLAB	729.4 in^3	800.7 in^3	866.8 in^3	928.6 in^3	986.5 in^3
S_x TOP STEEL	9506.8 in^3	29760.4 in^3	-46825.9 in^3	-15455.8 in^3	-10038.2 in^3
S_x BOT. STEEL	331.5 in^3	337.3 in^3	342.5 in^3	347.1 in^3	351.4 in^3

NOTE: NEGATIVE S_x TOP STEEL INDICATES TOP FLANGE IS BELOW NEUTRAL AXIS

3N=24 COMPOSITE SECTION PROPERTIES	EFFECTIVE SLAB WIDTH				
	6'-0"	7'-0"	8'-0"	9'-0"	10'-0"
I_{xx}	4241 in^4	4459 in^4	4654 in^4	4832 in^4	4994 in^4
S_x TOP SLAB	375.5 in^3	410.4 in^3	444.1 in^3	476.7 in^3	508.2 in^3
S_x TOP STEEL	1117.5 in^3	1324.9 in^3	1561.1 in^3	1832.3 in^3	2146.8 in^3
S_x BOT. STEEL	288.4 in^3	294.6 in^3	299.9 in^3	304.6 in^3	308.8 in^3

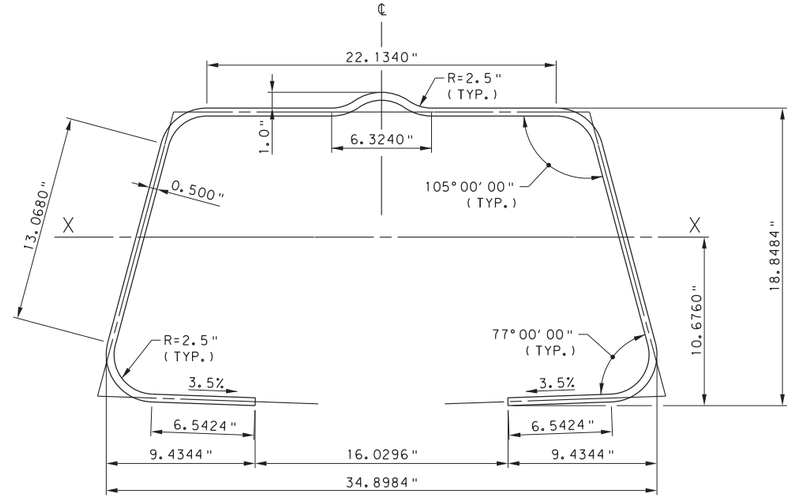

MOMENT CAPACITY	EFFECTIVE SLAB WIDTH				
	6'-0"	7'-0	8'-0"	9'-0"	10'-0"
PLASTIC, M_p	1906 KIP-FT	1994 KIP-FT	2064 KIP-FT	2118 KIP-FT	2161 KIP-FT
NOMINAL, M_n	1652 KIP-FT	1767 KIP-FT	1876 KIP-FT	1963 KIP-FT	2034 KIP-FT

EQUIVALENT PLATE GIRDER FOR STLRFD

TOP FLANGE: 26.25" x 0.5"
WEB: 17.5" x 1.035"
BOTTOM FLANGE: 16.0" x 0.5"

1/2" PLATE INFORMATION

PLATE WIDTH ALONG ℄ PLATE: 78.85 in
AREA: 39.43 in^2
WEIGHT: 134.16 plf

PENNDOT DRAWING #14-604-BDTD (REV.1)

NOTES:

1. FOR INDEX OF DRAWINGS AND SPECIFICATIONS, SEE SHEET NOS. 1 & 2.
2. PLASTIC MOMENT CALCULATED BASED AASHTO 6.10.7.1.2 (COMPOSITE COMPACT SECTION IN POSITIVE FLEXURE).
3. SECTION PROPERTIES BASED ON A CONCRETE STRENGTH OF 4 KSI AND ASTM A709, GRADE 50 STEEL.
4. SECTION PROPERTIES CONSIDER 8" THICK CONCRETE DECK WITH 1/2" INTEGRAL WEARING SURFACE & 0" HAUNCH.
5. SECTION PROPERTIES ASSUME BOTTOM FLANGES ARE LEVEL.
6. COMPOSITE SECTION PROPERTIES ARE BASED ON EFFECTIVE SLAB WIDTH EXCLUDING THE CLOSURE POUR.

9/18/2019

DESIGNER
CDR BRIDGE SYSTEMS
D.L. CLARK BUILDING, SUITE 610
503 MARTINDALE STREET
PITTSBURGH, PA 15212-5746
P: 412-322-0313
F: 412-322-2138
WEB: www.cdrbridges.com

DATE:	04/08/19
SCALE:	NOT TO SCALE
DESIGNED:	RTE
DRAWN:	RTE
CHECKED:	WES
CDR JOB #:	

COMMONWEALTH OF PENNSYLVANIA
DEPARTMENT OF TRANSPORTATION
BUREAU OF PROJECT DELIVERY

CDR BRIDGE SYSTEMS, LLC
FOLDED STEEL PLATE GIRDER SYSTEM

GIRDER TABLES - 2

PLOTTED: 4/8/2019 8:07:52 AM
OPERATOR: Robert.Elliott
FILE PATH: P:\CDR BRIDGE\PROPOSALS\P3672.00-Folded_Steel_Plate_Girder\Design\USTN\PennDOT\11-21 Beam Tables.dgn

FSPG DESIGNATION: W36 H20 016 A77

NON-COMPOSITE SECTION PROPERTIES			
I_{xx}	S_x TOP	S_x BOT.	r_x
2065 in^4	224.8 in^3	184.6 in^3	8.14 in

N=8 COMPOSITE SECTION PROPERTIES	EFFECTIVE SLAB WIDTH				
	6'-0"	7'-0"	8'-0"	9'-0"	10'-0"
I_{xx}	5938 in^4	6159 in^4	6349 in^4	6516 in^4	6665 in^4
S_x TOP SLAB	756.1 in^3	828.5 in^3	895.2 in^3	956.9 in^3	1014.4 in^3
S_x TOP STEEL	16777.3 in^3	-94237.2 in^3	-15603.5 in^3	-9436.3 in^3	-7168.2 in^3
S_x BOT. STEEL	296.6 in^3	301.3 in^3	305.5 in^3	309.3 in^3	312.8 in^3

NOTE: NEGATIVE S_x TOP STEEL INDICATES TOP FLANGE IS BELOW NEUTRAL AXIS

3N=24 COMPOSITE SECTION PROPERTIES	EFFECTIVE SLAB WIDTH				
	6'-0"	7'-0"	8'-0"	9'-0"	10'-0"
I_{xx}	4347 in^4	4562 in^4	4753 in^4	4924 in^4	5078 in^4
S_x TOP SLAB	385.3 in^3	422.7 in^3	458.7 in^3	493.3 in^3	526.7 in^3
S_x TOP STEEL	1149.2 in^3	1385.7 in^3	1660.7 in^3	1984.5 in^3	2370.9 in^3
S_x BOT. STEEL	262.0 in^3	267.1 in^3	271.4 in^3	275.2 in^3	278.5 in^3

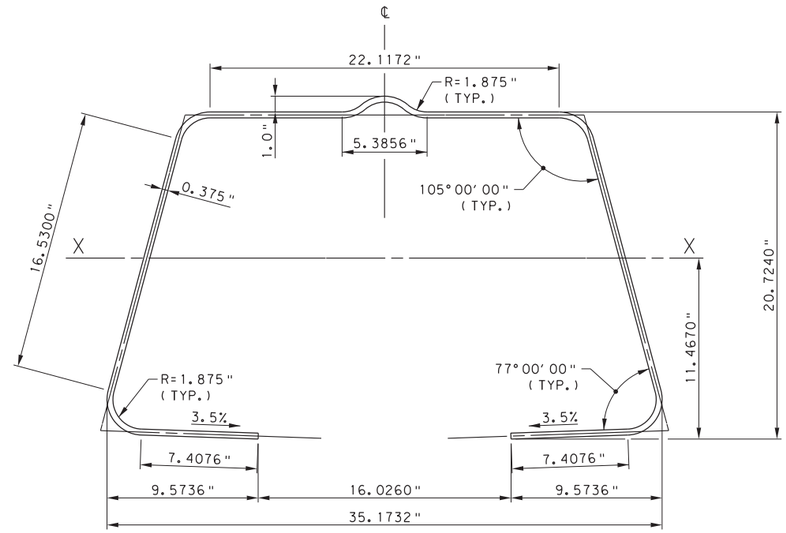

MOMENT CAPACITY	EFFECTIVE SLAB WIDTH				
	6'-0"	7'-0	8'-0"	9'-0"	10'-0"
PLASTIC, M_p	1756 KIP-FT	1815 KIP-FT	1858 KIP-FT	1892 KIP-FT	1919 KIP-FT
NOMINAL, M_n	1600 KIP-FT	1695 KIP-FT	1767 KIP-FT	1824 KIP-FT	1871 KIP-FT

EQUIVALENT PLATE GIRDER FOR STLRFD

TOP FLANGE: 25.25" x 0.375"
WEB: 19.625" x 0.776"
BOTTOM FLANGE: 17.0" x 0.375"

3/8" PLATE INFORMATION

PLATE WIDTH ALONG ℄ PLATE: 83.29 in
AREA: 31.23 in^2
WEIGHT: 106.28 plf

NON-COMPOSITE SECTION PROPERTIES			
I_{xx}	S_x TOP	S_x BOT.	r_x
2671 in^4	292.1 in^3	235.2 in^3	8.09 in

N=8 COMPOSITE SECTION PROPERTIES	EFFECTIVE SLAB WIDTH				
	6'-0"	7'-0"	8'-0"	9'-0"	10'-0"
I_{xx}	7202 in^4	7495 in^4	7747 in^4	7968 in^4	8163 in^4
S_x TOP SLAB	834.6 in^3	917.3 in^3	994.3 in^3	1066.3 in^3	1133.9 in^3
S_x TOP STEEL	6380.4 in^3	11174.5 in^3	26590.4 in^3	-283902.5 in^3	-27149.1 in^3
S_x BOT. STEEL	371.8 in^3	378.0 in^3	383.4 in^3	388.1 in^3	392.5 in^3

3N=24 COMPOSITE SECTION PROPERTIES	EFFECTIVE SLAB WIDTH				
	6'-0"	7'-0"	8'-0"	9'-0"	10'-0"
I_{xx}	5176 in^4	5437 in^4	5673 in^4	5887 in^4	6082 in^4
S_x TOP SLAB	428.4 in^3	468.0 in^3	506.4 in^3	543.7 in^3	579.8 in^3
S_x TOP STEEL	1129.8 in^3	1320.6 in^3	1532.3 in^3	1768.5 in^3	2033.5 in^3
S_x BOT. STEEL	325.1 in^3	331.9 in^3	337.7 in^3	342.9 in^3	347.4 in^3

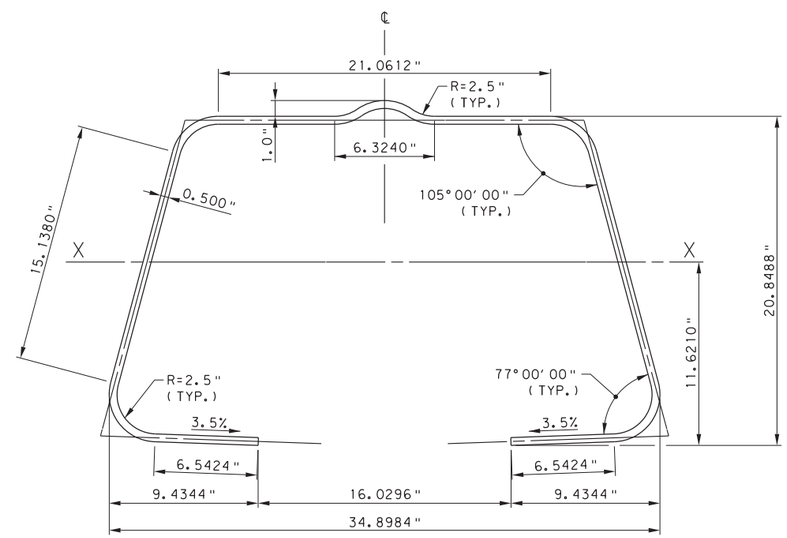

MOMENT CAPACITY	EFFECTIVE SLAB WIDTH				
	6'-0"	7'-0	8'-0"	9'-0"	10'-0"
PLASTIC, M_p	2138 KIP-FT	2229 KIP-FT	2304 KIP-FT	2363 KIP-FT	2409 KIP-FT
NOMINAL, M_n	1882 KIP-FT	1989 KIP-FT	2107 KIP-FT	2201 KIP-FT	2278 KIP-FT

EQUIVALENT PLATE GIRDER FOR STLRFD

TOP FLANGE: 25.25" x 0.5"
WEB: 19.5" x 1.035"
BOTTOM FLANGE: 16.0" x 0.5"

1/2" PLATE INFORMATION

PLATE WIDTH ALONG ℄ PLATE: 81.92 in
AREA: 40.97 in^2
WEIGHT: 139.41 plf

PENNDOT DRAWING #14-604-BDTD (REV.1)

NOTES:

1. FOR INDEX OF DRAWINGS AND SPECIFICATIONS, SEE SHEET NOS. 1 & 2.
2. PLASTIC MOMENT CALCULATED BASED AASHTO 6.10.7.1.2 (COMPOSITE COMPACT SECTION IN POSITIVE FLEXURE).
3. SECTION PROPERTIES BASED ON A CONCRETE STRENGTH OF 4 KSI AND ASTM A709, GRADE 50 STEEL.
4. SECTION PROPERTIES CONSIDER 8" THICK CONCRETE DECK WITH 1/2" INTEGRAL WEARING SURFACE & 0" HAUNCH.
5. SECTION PROPERTIES ASSUME BOTTOM FLANGES ARE LEVEL.
6. COMPOSITE SECTION PROPERTIES ARE BASED ON EFFECTIVE SLAB WIDTH EXCLUDING THE CLOSURE POUR.

9/19/2019

DESIGNER
CDR BRIDGE SYSTEMS
D.L. CLARK BUILDING, SUITE 610
503 MARTINDALE STREET
PITTSBURGH, PA 15212-5746
P: 412-322-0313
F: 412-322-2138
WEB: www.cdrbridges.com

DATE:	04/08/19
SCALE:	NOT TO SCALE
DESIGNED:	RTE
DRAWN:	RTE
CHECKED:	WES
CDR JOB #:	

COMMONWEALTH OF PENNSYLVANIA
DEPARTMENT OF TRANSPORTATION
BUREAU OF PROJECT DELIVERY

CDR BRIDGE SYSTEMS, LLC
FOLDED STEEL PLATE GIRDER SYSTEM

GIRDER TABLES - 3

PLOTTED: 4/8/2019 8:08:20 AM
OPERATOR: Robert.Elliott
FILE PATH: P:\CDR BRIDGE\PROPOSALS\P3672.00-Folded_Steel_Plate_Girder\Design\USTN\PennDOT\11-21 Beam Tables.dgn

FSPG DESIGNATION: W40 H20 016 A77

NON-COMPOSITE SECTION PROPERTIES			
I_{xx}	S_x TOP	S_x BOT.	r_x
2368 in^4	255.3 in^3	213.3 in^3	8.33 in

N=8 COMPOSITE SECTION PROPERTIES	EFFECTIVE SLAB WIDTH				
	6'-0"	7'-0"	8'-0"	9'-0"	10'-0"
I_{xx}	6520 in^4	6766 in^4	6978 in^4	7163 in^4	7328 in^4
S_x TOP SLAB	800.4 in^3	877.8 in^3	949.3 in^3	1015.8 in^3	1077.8 in^3
S_x TOP STEEL	10100.0 in^3	32466.6 in^3	-46639.1 in^3	-15980.3 in^3	-10451.6 in^3
S_x BOT. STEEL	330.5 in^3	335.5 in^3	340.0 in^3	344.0 in^3	347.7 in^3

NOTE: NEGATIVE S_x TOP STEEL INDICATES TOP FLANGE IS BELOW NEUTRAL AXIS

3N=24 COMPOSITE SECTION PROPERTIES	EFFECTIVE SLAB WIDTH				
	6'-0"	7'-0"	8'-0"	9'-0"	10'-0"
I_{xx}	4764 in^4	4998 in^4	5206 in^4	5394 in^4	5564 in^4
S_x TOP SLAB	409.9 in^3	448.8 in^3	486.3 in^3	522.5 in^3	557.5 in^3
S_x TOP STEEL	1155.4 in^3	1374.5 in^3	1624.1 in^3	1910.9 in^3	2243.6 in^3
S_x BOT. STEEL	293.1 in^3	298.6 in^3	303.2 in^3	307.3 in^3	310.9 in^3

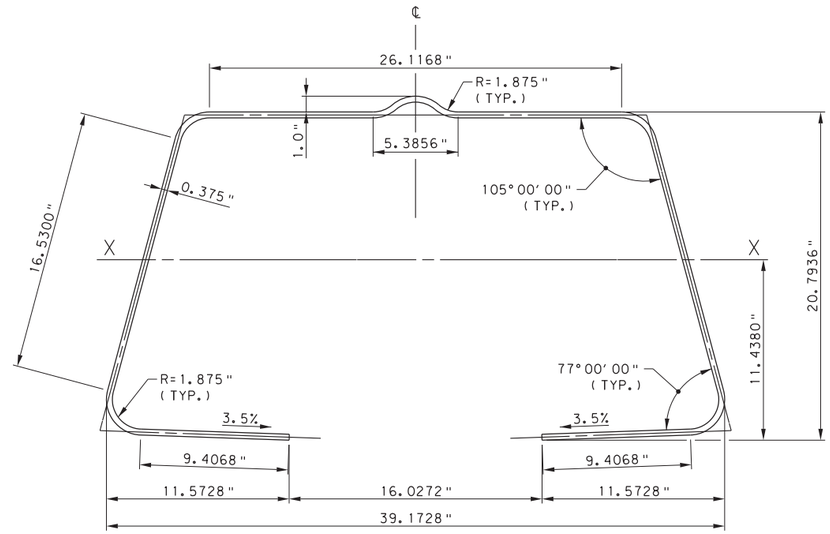

MOMENT CAPACITY	EFFECTIVE SLAB WIDTH				
	6'-0"	7'-0	8'-0"	9'-0"	10'-0"
PLASTIC, M_p	1895 KIP-FT	1965 KIP-FT	2017 KIP-FT	2058 KIP-FT	2091 KIP-FT
NOMINAL, M_n	1697 KIP-FT	1809 KIP-FT	1895 KIP-FT	1963 KIP-FT	2019 KIP-FT

EQUIVALENT PLATE GIRDER FOR STLRFD

TOP FLANGE: 29.25" x 0.375"
WEB: 19.625" x 0.776"
BOTTOM FLANGE: 21.0" x 0.375"

3/8" PLATE INFORMATION

PLATE WIDTH ALONG ℄ PLATE: 91.29 in
AREA: 34.23 in^2
WEIGHT: 116.47 plf

NON-COMPOSITE SECTION PROPERTIES			
I_{xx}	S_x TOP	S_x BOT.	r_x
3075 in^4	332.8 in^3	273.2 in^3	8.28 in

N=8 COMPOSITE SECTION PROPERTIES	EFFECTIVE SLAB WIDTH				
	6'-0"	7'-0"	8'-0"	9'-0"	10'-0"
I_{xx}	7923 in^4	8250 in^4	8532 in^4	8779 in^4	8997 in^4
S_x TOP SLAB	884.7 in^3	972.7 in^3	1054.9 in^3	1132.0 in^3	1204.6 in^3
S_x TOP STEEL	5445.3 in^3	8399.6 in^3	14504.9 in^3	34455.7 in^3	-289632.1 in^3
S_x BOT. STEEL	416.0 in^3	422.7 in^3	428.5 in^3	433.6 in^3	438.2 in^3

3N=24 COMPOSITE SECTION PROPERTIES	EFFECTIVE SLAB WIDTH				
	6'-0"	7'-0"	8'-0"	9'-0"	10'-0"
I_{xx}	5697 in^4	5980 in^4	6236 in^4	6469 in^4	6683 in^4
S_x TOP SLAB	458.7 in^3	499.8 in^3	539.7 in^3	578.5 in^3	616.2 in^3
S_x TOP STEEL	1158.1 in^3	1339.6 in^3	1538.4 in^3	1756.8 in^3	1997.9 in^3
S_x BOT. STEEL	365.6 in^3	372.9 in^3	379.1 in^3	384.7 in^3	389.6 in^3

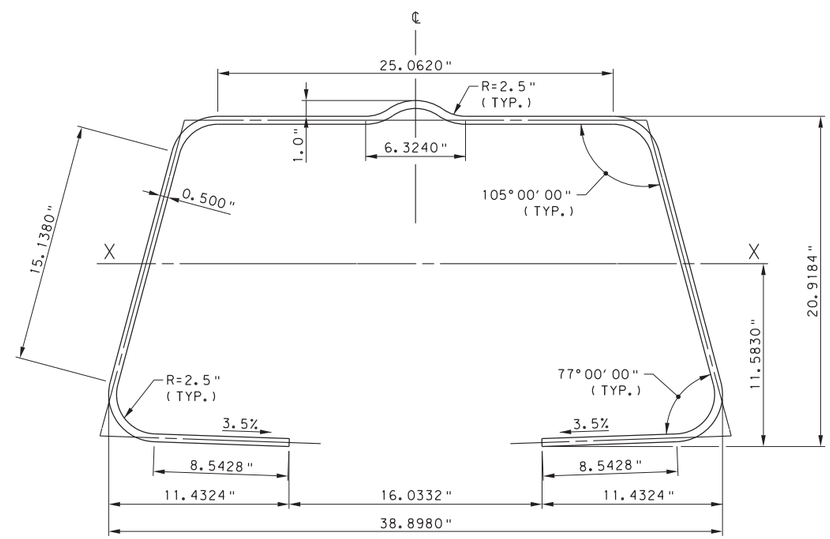

MOMENT CAPACITY	EFFECTIVE SLAB WIDTH				
	6'-0"	7'-0	8'-0"	9'-0"	10'-0"
PLASTIC, M_p	2309 KIP-FT	2403 KIP-FT	2491 KIP-FT	2562 KIP-FT	2618 KIP-FT
NOMINAL, M_n	2029 KIP-FT	2119 KIP-FT	2240 KIP-FT	2352 KIP-FT	2444 KIP-FT

EQUIVALENT PLATE GIRDER FOR STLRFD

TOP FLANGE: 29.25" x 0.5"
WEB: 19.5" x 1.035"
BOTTOM FLANGE: 20.0" x 0.5"

1/2" PLATE INFORMATION

PLATE WIDTH ALONG ℄ PLATE: 89.92 in
AREA: 44.96 in^2
WEIGHT: 152.98 plf

PENNDOT DRAWING #14-604-BDTD (REV.1)

NOTES:

1. FOR INDEX OF DRAWINGS AND SPECIFICATIONS, SEE SHEET NOS. 1 & 2.
2. PLASTIC MOMENT CALCULATED BASED AASHTO 6.10.7.1.2 (COMPOSITE COMPACT SECTION IN POSITIVE FLEXURE).
3. SECTION PROPERTIES BASED ON A CONCRETE STRENGTH OF 4 KSI AND ASTM A709, GRADE 50 STEEL.
4. SECTION PROPERTIES CONSIDER 8" THICK CONCRETE DECK WITH 1/2" INTEGRAL WEARING SURFACE & 0" HAUNCH.
5. SECTION PROPERTIES ASSUME BOTTOM FLANGES ARE LEVEL.
6. COMPOSITE SECTION PROPERTIES ARE BASED ON EFFECTIVE SLAB WIDTH EXCLUDING THE CLOSURE POUR.

9/19/2019

DESIGNER
CDR BRIDGE SYSTEMS
D.L. CLARK BUILDING, SUITE 610
503 MARTINDALE STREET
PITTSBURGH, PA 15212-5746
P: 412-322-0313
F: 412-322-2138
WEB: www.cdrbridges.com

DATE:	04/08/19
SCALE:	NOT TO SCALE
DESIGNED:	RTE
DRAWN:	RTE
CHECKED:	WES
CDR JOB #:	

COMMONWEALTH OF PENNSYLVANIA
DEPARTMENT OF TRANSPORTATION
BUREAU OF PROJECT DELIVERY

CDR BRIDGE SYSTEMS, LLC
FOLDED STEEL PLATE GIRDER SYSTEM

GIRDER TABLES - 4

PLOTTED: 4/8/2019 8:08:39 AM
OPERATOR: Robert.Elliott
FILE PATH: P:\CDR BRIDGE\PROPOSALS\P3672.00-Folded_Steel_Plate_Girder\Design\USTN\PennDOT\11-21 Beam Tables.dgn

FSPG DESIGNATION: W40 H24 016 A77

NON-COMPOSITE SECTION PROPERTIES			
I_{xx}	S_x TOP	S_x BOT.	r_x
3459 in^4	302.5 in^3	267.2 in^3	9.74 in

N=8 COMPOSITE SECTION PROPERTIES	EFFECTIVE SLAB WIDTH				
	6'-0"	7'-0"	8'-0"	9'-0"	10'-0"
I_{xx}	9215 in^4	9555 in^4	9845 in^4	10096 in^4	10317 in^4
S_x TOP SLAB	1012.9 in^3	1114.2 in^3	1208.3 in^3	1296.2 in^3	1378.4 in^3
S_x TOP STEEL	5769.2 in^3	8879.2 in^3	15201.4 in^3	34933.6 in^3	-663365.4 in^3
S_x BOT. STEEL	404.5 in^3	410.1 in^3	414.9 in^3	419.2 in^3	423.0 in^3

3N=24 COMPOSITE SECTION PROPERTIES	EFFECTIVE SLAB WIDTH				
	6'-0"	7'-0"	8'-0"	9'-0"	10'-0"
I_{xx}	6756 in^4	7084 in^4	7377 in^4	7640 in^4	7879 in^4
S_x TOP SLAB	513.3 in^3	562.2 in^3	609.5 in^3	655.3 in^3	699.8 in^3
S_x TOP STEEL	1193.3 in^3	1388.7 in^3	1602.4 in^3	1837.1 in^3	2095.9 in^3
S_x BOT. STEEL	361.0 in^3	367.5 in^3	373.1 in^3	377.9 in^3	382.2 in^3

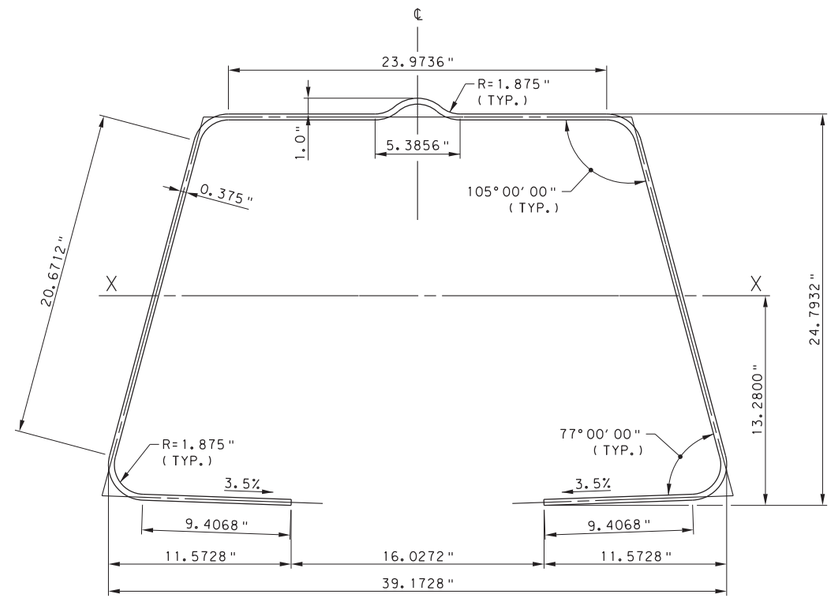

MOMENT CAPACITY	EFFECTIVE SLAB WIDTH				
	6'-0"	7'-0	8'-0"	9'-0"	10'-0"
PLASTIC, M_p	2314 KIP-FT	2394 KIP-FT	2454 KIP-FT	2501 KIP-FT	2538 KIP-FT
NOMINAL, M_n	2100 KIP-FT	2228 KIP-FT	2326 KIP-FT	2405 KIP-FT	2468 KIP-FT

EQUIVALENT PLATE GIRDER FOR STLRFD

TOP FLANGE: 27.25" x 0.375"
WEB: 23.625" x 0.776"
BOTTOM FLANGE: 21.0" x 0.375"

3/8" PLATE INFORMATION

PLATE WIDTH ALONG ℄ PLATE: 97.43 in
AREA: 36.53 in^2
WEIGHT: 124.31 plf

NON-COMPOSITE SECTION PROPERTIES			
I_{xx}	S_x TOP	S_x BOT.	r_x
4498 in^4	394.8 in^3	343.2 in^3	9.69 in

N=8 COMPOSITE SECTION PROPERTIES	EFFECTIVE SLAB WIDTH				
	6'-0"	7'-0"	8'-0"	9'-0"	10'-0"
I_{xx}	11217 in^4	11675 in^4	12066 in^4	12407 in^4	12707 in^4
S_x TOP SLAB	1115.1 in^3	1228.9 in^3	1336.0 in^3	1436.9 in^3	1532.4 in^3
S_x TOP STEEL	4382.9 in^3	5836.8 in^3	7875.6 in^3	10935.9 in^3	16032.7 in^3
S_x BOT. STEEL	511.2 in^3	518.9 in^3	525.4 in^3	531.0 in^3	536.0 in^3

3N=24 COMPOSITE SECTION PROPERTIES	EFFECTIVE SLAB WIDTH				
	6'-0"	7'-0"	8'-0"	9'-0"	10'-0"
I_{xx}	8096 in^4	8491 in^4	8849 in^4	9176 in^4	9476 in^4
S_x TOP SLAB	575.2 in^3	626.4 in^3	676.3 in^3	725.0 in^3	772.5 in^3
S_x TOP STEEL	1231.5 in^3	1402.4 in^3	1584.6 in^3	1779.2 in^3	1987.6 in^3
S_x BOT. STEEL	451.7 in^3	460.3 in^3	467.8 in^3	474.4 in^3	480.2 in^3

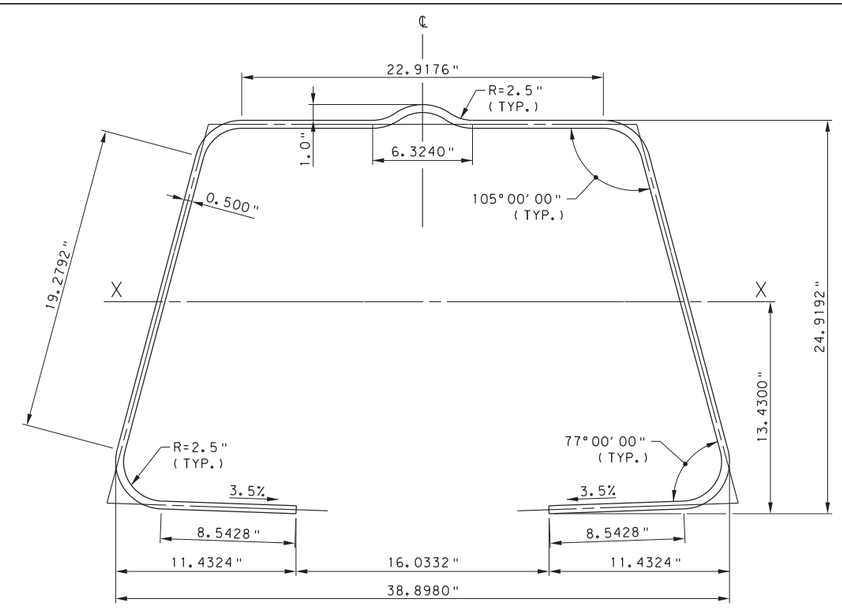

MOMENT CAPACITY	EFFECTIVE SLAB WIDTH				
	6'-0"	7'-0	8'-0"	9'-0"	10'-0"
PLASTIC, M_p	2854 KIP-FT	2952 KIP-FT	3044 KIP-FT	3125 KIP-FT	3189 KIP-FT
NOMINAL, M_n	2570 KIP-FT	2667 KIP-FT	2771 KIP-FT	2900 KIP-FT	3005 KIP-FT

EQUIVALENT PLATE GIRDER FOR STLRFD

TOP FLANGE: 27.25" x 0.5"
WEB: 23.5" x 1.035"
BOTTOM FLANGE: 20.0" x 0.5"

1/2" PLATE INFORMATION

PLATE WIDTH ALONG ℄ PLATE: 96.06 in
AREA: 48.04 in^2
WEIGHT: 163.46 plf

PENNDOT DRAWING #14-604-BDTD (REV.1)

NOTES:

1. FOR INDEX OF DRAWINGS AND SPECIFICATIONS, SEE SHEET NOS. 1 & 2.
2. PLASTIC MOMENT CALCULATED BASED AASHTO 6.10.7.1.2 (COMPOSITE COMPACT SECTION IN POSITIVE FLEXURE).
3. SECTION PROPERTIES BASED ON A CONCRETE STRENGTH OF 4 KSI AND ASTM A709, GRADE 50 STEEL.
4. SECTION PROPERTIES CONSIDER 8" THICK CONCRETE DECK WITH ½" INTEGRAL WEARING SURFACE & 0" HAUNCH.
5. SECTION PROPERTIES ASSUME BOTTOM FLANGES ARE LEVEL.
6. COMPOSITE SECTION PROPERTIES ARE BASED ON EFFECTIVE SLAB WIDTH EXCLUDING THE CLOSURE POUR.

9/19/2019

DESIGNER
CDR BRIDGE SYSTEMS
D.L. CLARK BUILDING, SUITE 610
503 MARTINDALE STREET
PITTSBURGH, PA 15212-5746
P: 412-322-0313
F: 412-322-2138
WEB: www.cdrbridges.com

DATE:	04/08/19
SCALE:	NOT TO SCALE
DESIGNED:	RTE
DRAWN:	RTE
CHECKED:	WES
CDR JOB #:	

COMMONWEALTH OF PENNSYLVANIA
DEPARTMENT OF TRANSPORTATION
BUREAU OF PROJECT DELIVERY

CDR BRIDGE SYSTEMS, LLC
FOLDED STEEL PLATE GIRDER SYSTEM

GIRDER TABLES - 5

PLOTTED: 4/8/2019 8:09:03 AM
OPERATOR: Robert.Elliott
FILE PATH: P:\CDR BRIDGE\PROPOSALS\P3672.00-Folded.Steel_Plate.Girder\Design\USTN\PennDOT\11-21 Beam Tables.dgn

FSPG DESIGNATION: W40 H28 016 A77

NON-COMPOSITE SECTION PROPERTIES			
I_{xx}	S_x TOP	S_x BOT.	r_x
4766 in^4	349.1 in^3	323.7 in^3	11.09 in

N=8 COMPOSITE SECTION PROPERTIES	EFFECTIVE SLAB WIDTH				
	6'-0"	7'-0"	8'-0"	9'-0"	10'-0"
I_{xx}	12518 in^4	12981 in^4	13372 in^4	13709 in^4	14004 in^4
S_x TOP SLAB	1236.3 in^3	1364.1 in^3	1483.6 in^3	1595.7 in^3	1701.2 in^3
S_x TOP STEEL	4768.6 in^3	6438.8 in^3	8836.8 in^3	12564.5 in^3	19140.2 in^3
S_x BOT. STEEL	486.1 in^3	492.5 in^3	497.8 in^3	502.5 in^3	506.6 in^3

3N=24 COMPOSITE SECTION PROPERTIES	EFFECTIVE SLAB WIDTH				
	6'-0"	7'-0"	8'-0"	9'-0"	10'-0"
I_{xx}	9163 in^4	9608 in^4	10007 in^4	10366 in^4	10692 in^4
S_x TOP SLAB	619.6 in^3	678.8 in^3	736.4 in^3	792.4 in^3	847.0 in^3
S_x TOP STEEL	1257.3 in^3	1444.0 in^3	1643.5 in^3	1857.2 in^3	2086.6 in^3
S_x BOT. STEEL	434.6 in^3	442.4 in^3	449.0 in^3	454.8 in^3	459.9 in^3

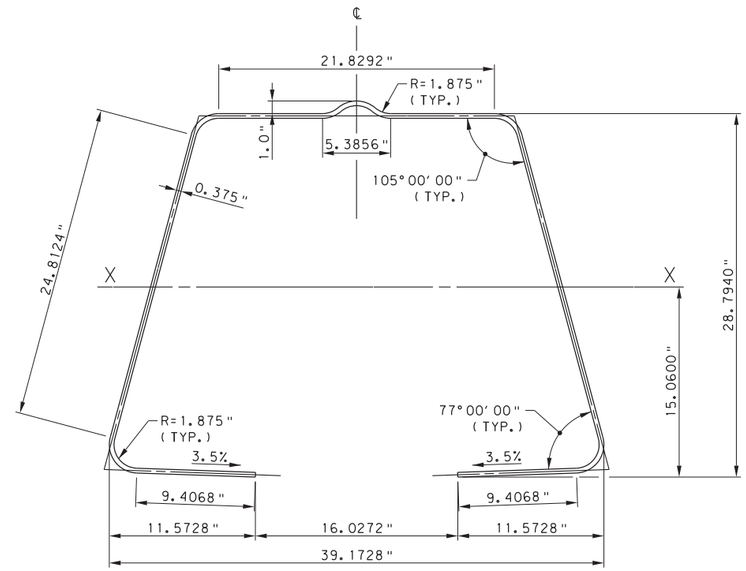

MOMENT CAPACITY	EFFECTIVE SLAB WIDTH				
	6'-0"	7'-0	8'-0"	9'-0"	10'-0"
PLASTIC, M_p	2784 KIP-FT	2872 KIP-FT	2939 KIP-FT	2992 KIP-FT	3034 KIP-FT
NOMINAL, M_n	2569 KIP-FT	2694 KIP-FT	2806 KIP-FT	2895 KIP-FT	2967 KIP-FT

EQUIVALENT PLATE GIRDER FOR STLRFD

TOP FLANGE: 25.0" x 0.375"
WEB: 27.625" x 0.776"
BOTTOM FLANGE: 21.0" x 0.375"

3/8" PLATE INFORMATION

PLATE WIDTH ALONG ℄ PLATE: 103.57 in
AREA: 38.84 in^2
WEIGHT: 132.15 plf

NON-COMPOSITE SECTION PROPERTIES			
I_{xx}	S_x TOP	S_x BOT.	r_x
6205 in^4	455.9 in^3	416.7 in^3	11.04 in

N=8 COMPOSITE SECTION PROPERTIES	EFFECTIVE SLAB WIDTH				
	6'-0"	7'-0"	8'-0"	9'-0"	10'-0"
I_{xx}	15243 in^4	15869 in^4	16404 in^4	16867 in^4	17274 in^4
S_x TOP SLAB	1355.4 in^3	1497.4 in^3	1631.7 in^3	1759.2 in^3	1880.3 in^3
S_x TOP STEEL	4068.6 in^3	5122.3 in^3	6425.8 in^3	8078.3 in^3	10239.6 in^3
S_x BOT. STEEL	615.8 in^3	624.7 in^3	632.2 in^3	638.6 in^3	644.2 in^3

3N=24 COMPOSITE SECTION PROPERTIES	EFFECTIVE SLAB WIDTH				
	6'-0"	7'-0"	8'-0"	9'-0"	10'-0"
I_{xx}	10991 in^4	11524 in^4	12010 in^4	12455 in^4	12863 in^4
S_x TOP SLAB	694.8 in^3	756.5 in^3	816.8 in^3	875.8 in^3	933.5 in^3
S_x TOP STEEL	1321.4 in^3	1490.0 in^3	1667.1 in^3	1853.0 in^3	2048.6 in^3
S_x BOT. STEEL	544.6 in^3	555.0 in^3	564.0 in^3	571.9 in^3	578.9 in^3

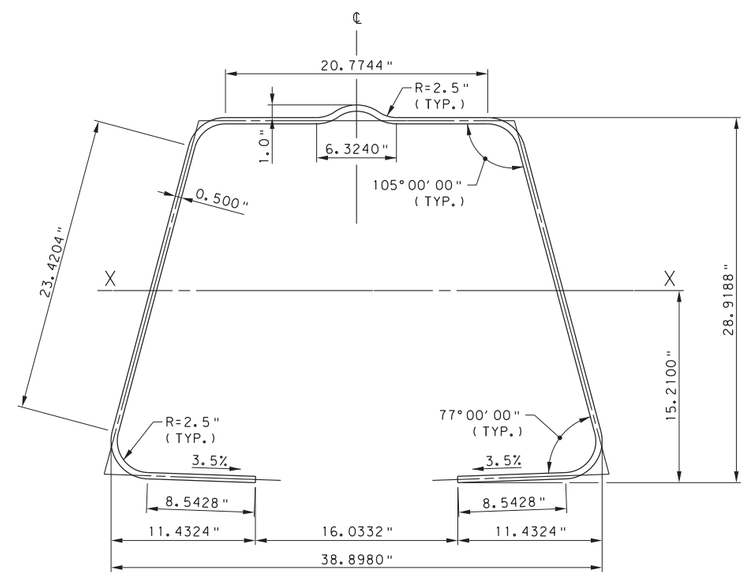

MOMENT CAPACITY	EFFECTIVE SLAB WIDTH				
	6'-0"	7'-0	8'-0"	9'-0"	10'-0"
PLASTIC, M_p	3465 KIP-FT	3567 KIP-FT	3662 KIP-FT	3751 KIP-FT	3824 KIP-FT
NOMINAL, M_n	3179 KIP-FT	3284 KIP-FT	3382 KIP-FT	3510 KIP-FT	3630 KIP-FT

EQUIVALENT PLATE GIRDER FOR STLRFD

TOP FLANGE: 25.0" x 0.5"
WEB: 27.5" x 1.035"
BOTTOM FLANGE: 20.0" x 0.5"

1/2" PLATE INFORMATION

PLATE WIDTH ALONG ℄ PLATE: 102.20 in
AREA: 51.11 in^2
WEIGHT: 173.90 plf

PENNDOT DRAWING #14-604-BDTD (REV.1)

NOTES:

1. FOR INDEX OF DRAWINGS AND SPECIFICATIONS, SEE SHEET NOS. 1 & 2.
2. PLASTIC MOMENT CALCULATED BASED AASHTO 6.10.7.1.2 (COMPOSITE COMPACT SECTION IN POSITIVE FLEXURE).
3. SECTION PROPERTIES BASED ON A CONCRETE STRENGTH OF 4 KSI AND ASTM A709, GRADE 50 STEEL.
4. SECTION PROPERTIES CONSIDER 8" THICK CONCRETE DECK WITH 1/2" INTEGRAL WEARING SURFACE & 0" HAUNCH.
5. SECTION PROPERTIES ASSUME BOTTOM FLANGES ARE LEVEL.
6. COMPOSITE SECTION PROPERTIES ARE BASED ON EFFECTIVE SLAB WIDTH EXCLUDING THE CLOSURE POUR.

9/19/2019

DESIGNER
CDR BRIDGE SYSTEMS
D.L. CLARK BUILDING, SUITE 610
503 MARTINDALE STREET
PITTSBURGH, PA 15212-5746
P: 412-322-0313
F: 412-322-2138
WEB: www.cdrbridges.com

DATE:	04/08/19
SCALE:	NOT TO SCALE
DESIGNED:	RTE
DRAWN:	RTE
CHECKED:	WES
CDR JOB #:	

COMMONWEALTH OF PENNSYLVANIA
DEPARTMENT OF TRANSPORTATION
BUREAU OF PROJECT DELIVERY

CDR BRIDGE SYSTEMS, LLC
FOLDED STEEL PLATE GIRDER SYSTEM

GIRDER TABLES - 6

PLOTTED: 4/8/2019 8:09:25 AM
OPERATOR: Robert.Elliott
FILE PATH: P:\CDR BRIDGE\PROPOSALS\P3672.00-Folded_Steel_Plate_Girder\Design\USTN\PennDOT\11-21 Beam Tables.dgn

FSPG DESIGNATION: W40 H32 016 A77

NON-COMPOSITE SECTION PROPERTIES			
I_{xx}	S_x TOP	S_x BOT.	r_x
6292 in^4	395.0 in^3	382.6 in^3	12.38 in

N=8 COMPOSITE SECTION PROPERTIES	EFFECTIVE SLAB WIDTH				
	6'-0"	7'-0"	8'-0"	9'-0"	10'-0"
I_{xx}	16465 in^4	17083 in^4	17604 in^4	18051 in^4	18441 in^4
S_x TOP SLAB	1467.0 in^3	1623.3 in^3	1770.4 in^3	1909.2 in^3	2040.5 in^3
S_x TOP STEEL	4421.5 in^3	5649.7 in^3	7204.6 in^3	9234.3 in^3	11993.0 in^3
S_x BOT. STEEL	574.7 in^3	582.0 in^3	588.2 in^3	593.4 in^3	598.0 in^3

3N=24 COMPOSITE SECTION PROPERTIES	EFFECTIVE SLAB WIDTH				
	6'-0"	7'-0"	8'-0"	9'-0"	10'-0"
I_{xx}	12000 in^4	12588 in^4	13117 in^4	13594 in^4	14028 in^4
S_x TOP SLAB	727.6 in^3	797.5 in^3	865.6 in^3	932.2 in^3	997.2 in^3
S_x TOP STEEL	1334.4 in^3	1519.3 in^3	1714.0 in^3	1919.2 in^3	2135.8 in^3
S_x BOT. STEEL	513.2 in^3	522.6 in^3	530.6 in^3	537.5 in^3	543.6 in^3

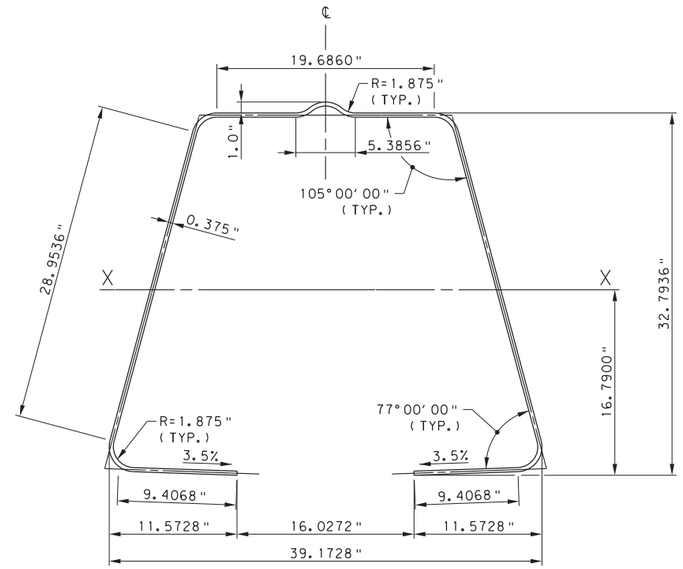

MOMENT CAPACITY	EFFECTIVE SLAB WIDTH				
	6'-0"	7'-0	8'-0"	9'-0"	10'-0"
PLASTIC, M_p	3304 KIP-FT	3397 KIP-FT	3473 KIP-FT	3532 KIP-FT	3580 KIP-FT
NOMINAL, M_n	3094 KIP-FT	3208 KIP-FT	3334 KIP-FT	3434 KIP-FT	3515 KIP-FT

EQUIVALENT PLATE GIRDER FOR STLRFD

TOP FLANGE: 22.75" x 0.375"
WEB: 31.625" x 0.776"
BOTTOM FLANGE: 21.0" x 0.375"

3/8" PLATE INFORMATION

PLATE WIDTH ALONG ℄ PLATE: 109.70 in
AREA: 41.14 in^2
WEIGHT: 139.99 plf

NON-COMPOSITE SECTION PROPERTIES			
I_{xx}	S_x TOP	S_x BOT.	r_x
8198 in^4	516.1 in^3	493.3 in^3	12.32 in

N=8 COMPOSITE SECTION PROPERTIES	EFFECTIVE SLAB WIDTH				
	6'-0"	7'-0"	8'-0"	9'-0"	10'-0"
I_{xx}	20042 in^4	20879 in^4	21594 in^4	22213 in^4	22756 in^4
S_x TOP SLAB	1602.0 in^3	1773.9 in^3	1937.5 in^3	2093.5 in^3	2242.4 in^3
S_x TOP STEEL	4000.0 in^3	4889.5 in^3	5923.8 in^3	7140.8 in^3	8592.8 in^3
S_x BOT. STEEL	729.1 in^3	739.6 in^3	748.4 in^3	755.8 in^3	762.3 in^3

3N=24 COMPOSITE SECTION PROPERTIES	EFFECTIVE SLAB WIDTH				
	6'-0"	7'-0"	8'-0"	9'-0"	10'-0"
I_{xx}	14395 in^4	15097 in^4	15739 in^4	16327 in^4	16869 in^4
S_x TOP SLAB	816.2 in^3	888.5 in^3	959.5 in^3	1029.1 in^3	1097.5 in^3
S_x TOP STEEL	1420.0 in^3	1590.6 in^3	1767.7 in^3	1951.8 in^3	2143.3 in^3
S_x BOT. STEEL	643.7 in^3	656.2 in^3	667.0 in^3	676.5 in^3	684.9 in^3

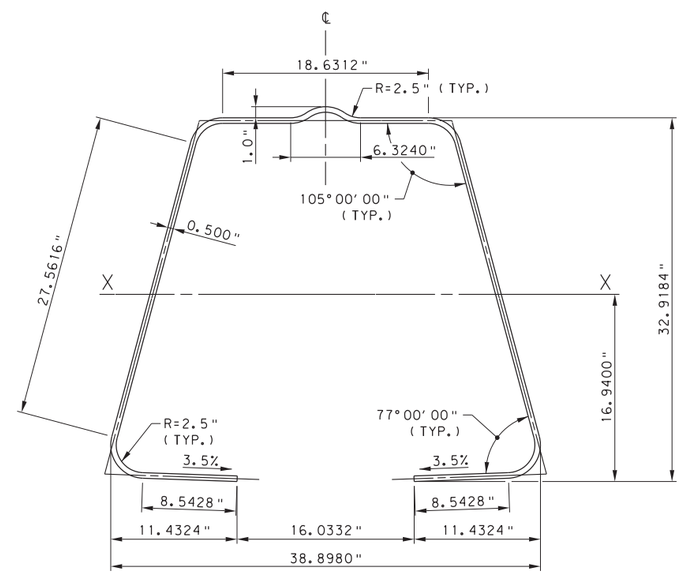

MOMENT CAPACITY	EFFECTIVE SLAB WIDTH				
	6'-0"	7'-0	8'-0"	9'-0"	10'-0"
PLASTIC, M_p	4140 KIP-FT	4249 KIP-FT	4349 KIP-FT	4441 KIP-FT	4524 KIP-FT
NOMINAL, M_n	3853 KIP-FT	3967 KIP-FT	4072 KIP-FT	4183 KIP-FT	4318 KIP-FT

EQUIVALENT PLATE GIRDER FOR STLRFD

TOP FLANGE: 22.75" x 0.5"
WEB: 31.5" x 1.035"
BOTTOM FLANGE: 20.0" x 0.5"

1/2" PLATE INFORMATION

PLATE WIDTH ALONG ℄ PLATE: 108.34 in
AREA: 54.17 in^2
WEIGHT: 184.34 plf

PENNDOT DRAWING #14-604-BDTD (REV.1)

NOTES:

1. FOR INDEX OF DRAWINGS AND SPECIFICATIONS, SEE SHEET NOS. 1 & 2.
2. PLASTIC MOMENT CALCULATED BASED AASHTO 6.10.7.1.2 (COMPOSITE COMPACT SECTION IN POSITIVE FLEXURE).
3. SECTION PROPERTIES BASED ON A CONCRETE STRENGTH OF 4 KSI AND ASTM A709, GRADE 50 STEEL.
4. SECTION PROPERTIES CONSIDER 8" THICK CONCRETE DECK WITH 1/2" INTEGRAL WEARING SURFACE & 0" HAUNCH.
5. SECTION PROPERTIES ASSUME BOTTOM FLANGES ARE LEVEL.
6. COMPOSITE SECTION PROPERTIES ARE BASED ON EFFECTIVE SLAB WIDTH EXCLUDING THE CLOSURE POUR.

9/19/2019

DESIGNER
CDR BRIDGE SYSTEMS
D.L. CLARK BUILDING, SUITE 610
503 MARTINDALE STREET
PITTSBURGH, PA 15212-5746
P: 412-322-0313
F: 412-322-2138
WEB: www.cdrbridges.com

DATE:	04/08/19
SCALE:	NOT TO SCALE
DESIGNED:	RTE
DRAWN:	RTE
CHECKED:	WES
CDR JOB #:	

COMMONWEALTH OF PENNSYLVANIA
DEPARTMENT OF TRANSPORTATION
BUREAU OF PROJECT DELIVERY

CDR BRIDGE SYSTEMS, LLC
FOLDED STEEL PLATE GIRDER SYSTEM

GIRDER TABLES - 7

PLOTTED: 4/8/2019 8:09:47 AM
OPERATOR: Robert.Elliott
FILE PATH: P:\CDR BRIDGE\PROPOSALS\P3672.00-Folded_Steel_Plate_Girder\Design\USTN\PennDOT\11-21 Beam Tables.dgn

FSPG DESIGNATION: W40 H34 016 A77

NON-COMPOSITE SECTION PROPERTIES			
I_{xx}	S_x TOP	S_x BOT.	r_x
7137 in^4	417.8 in^3	412.8 in^3	13.00 in

N=8 COMPOSITE SECTION PROPERTIES	EFFECTIVE SLAB WIDTH				
	6'-0"	7'-0"	8'-0"	9'-0"	10'-0"
I_{xx}	18692 in^4	19401 in^4	19998 in^4	20510 in^4	20956 in^4
S_x TOP SLAB	1584.2 in^3	1755.4 in^3	1917.0 in^3	2069.9 in^3	2214.8 in^3
S_x TOP STEEL	4348.3 in^3	5462.2 in^3	6821.1 in^3	8514.5 in^3	10681.7 in^3
S_x BOT. STEEL	621.5 in^3	629.4 in^3	636.0 in^3	641.6 in^3	646.5 in^3

3N=24 COMPOSITE SECTION PROPERTIES	EFFECTIVE SLAB WIDTH				
	6'-0"	7'-0"	8'-0"	9'-0"	10'-0"
I_{xx}	13583 in^4	14254 in^4	14857 in^4	15402 in^4	15898 in^4
S_x TOP SLAB	781.9 in^3	857.2 in^3	930.8 in^3	1002.7 in^3	1073.0 in^3
S_x TOP STEEL	1376.0 in^3	1561.5 in^3	1755.7 in^3	1959.2 in^3	2172.8 in^3
S_x BOT. STEEL	554.3 in^3	564.6 in^3	573.3 in^3	580.9 in^3	587.6 in^3

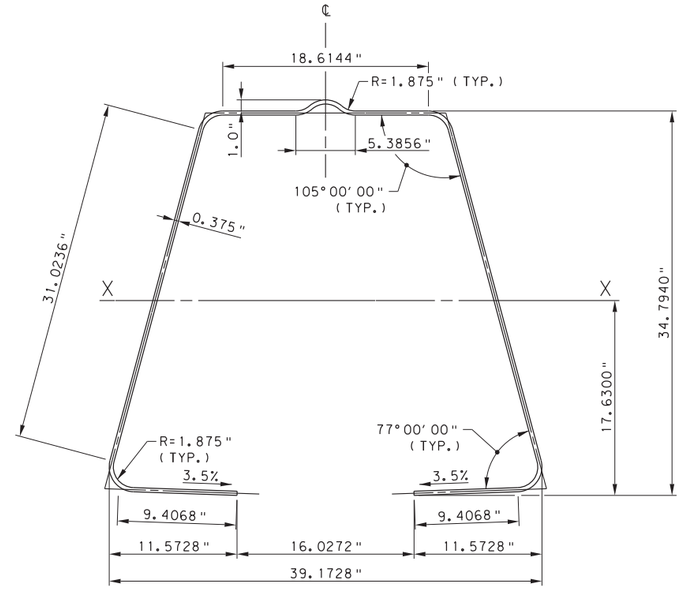

MOMENT CAPACITY	EFFECTIVE SLAB WIDTH				
	6'-0"	7'-0	8'-0"	9'-0"	10'-0"
PLASTIC, M_p	3583 KIP-FT	3677 KIP-FT	3758 KIP-FT	3821 KIP-FT	3871 KIP-FT
NOMINAL, M_n	3376 KIP-FT	3483 KIP-FT	3617 KIP-FT	3723 KIP-FT	3808 KIP-FT

EQUIVALENT PLATE GIRDER FOR STLRFD

TOP FLANGE: 21.75" x 0.375"
WEB: 33.625" x 0.776"
BOTTOM FLANGE: 21.0" x 0.375"

3/8" PLATE INFORMATION

PLATE WIDTH ALONG ℄ PLATE: 112.77 in
AREA: 42.29 in^2
WEIGHT: 143.91 plf

NON-COMPOSITE SECTION PROPERTIES			
I_{xx}	S_x TOP	S_x BOT.	r_x
9303 in^4	546.0 in^3	532.7 in^3	12.94 in

N=8 COMPOSITE SECTION PROPERTIES	EFFECTIVE SLAB WIDTH				
	6'-0"	7'-0"	8'-0"	9'-0"	10'-0"
I_{xx}	22742 in^4	23703 in^4	24523 in^4	25234 in^4	25857 in^4
S_x TOP SLAB	1726.9 in^3	1914.2 in^3	2093.0 in^3	2263.8 in^3	2427.3 in^3
S_x TOP STEEL	4011.4 in^3	4854.6 in^3	5815.3 in^3	6919.5 in^3	8201.4 in^3
S_x BOT. STEEL	788.8 in^3	800.3 in^3	809.8 in^3	817.9 in^3	824.9 in^3

3N=24 COMPOSITE SECTION PROPERTIES	EFFECTIVE SLAB WIDTH				
	6'-0"	7'-0"	8'-0"	9'-0"	10'-0"
I_{xx}	16292 in^4	17091 in^4	17821 in^4	18492 in^4	19110 in^4
S_x TOP SLAB	877.2 in^3	955.0 in^3	1031.3 in^3	1106.4 in^3	1180.1 in^3
S_x TOP STEEL	1471.3 in^3	1643.8 in^3	1822.3 in^3	2006.9 in^3	2198.2 in^3
S_x BOT. STEEL	695.5 in^3	709.1 in^3	720.9 in^3	731.3 in^3	740.5 in^3

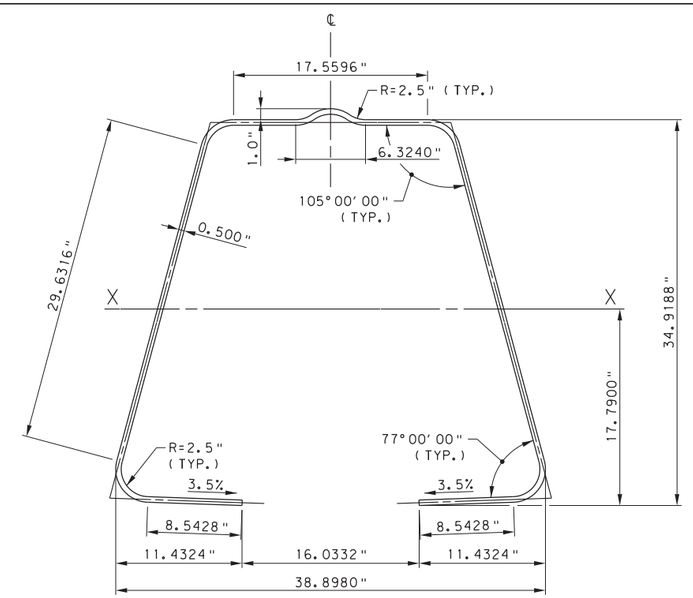

MOMENT CAPACITY	EFFECTIVE SLAB WIDTH				
	6'-0"	7'-0	8'-0"	9'-0"	10'-0"
PLASTIC, M_p	4497 KIP-FT	4614 KIP-FT	4717 KIP-FT	4811 KIP-FT	4897 KIP-FT
NOMINAL, M_n	4300 KIP-FT	4333 KIP-FT	4443 KIP-FT	4546 KIP-FT	4687 KIP-FT

EQUIVALENT PLATE GIRDER FOR STLRFD

TOP FLANGE: 21.75" x 0.5"
WEB: 33.5" x 1.035"
BOTTOM FLANGE: 20.0" x 0.5"

1/2" PLATE INFORMATION

PLATE WIDTH ALONG ℄ PLATE: 111.41 in
AREA: 55.70 in^2
WEIGHT: 189.53 plf

PENNDOT DRAWING #14-604-BDTD (REV.1)

NOTES:

1. FOR INDEX OF DRAWINGS AND SPECIFICATIONS, SEE SHEET NOS. 1 & 2.
2. PLASTIC MOMENT CALCULATED BASED AASHTO 6.10.7.1.2 (COMPOSITE COMPACT SECTION IN POSITIVE FLEXURE).
3. SECTION PROPERTIES BASED ON A CONCRETE STRENGTH OF 4 KSI AND ASTM A709, GRADE 50 STEEL.
4. SECTION PROPERTIES CONSIDER 8" THICK CONCRETE DECK WITH 1/2" INTEGRAL WEARING SURFACE & 0" HAUNCH.
5. SECTION PROPERTIES ASSUME BOTTOM FLANGES ARE LEVEL.
6. COMPOSITE SECTION PROPERTIES ARE BASED ON EFFECTIVE SLAB WIDTH EXCLUDING THE CLOSURE POUR.

9/19/2019

DESIGNER
CDR BRIDGE SYSTEMS
D.L. CLARK BUILDING, SUITE 610
503 MARTINDALE STREET
PITTSBURGH, PA 15212-5746
P: 412-322-0313
F: 412-322-2138
WEB: www.cdrbridges.com

DATE:	04/08/19
SCALE:	NOT TO SCALE
DESIGNED:	RTE
DRAWN:	RTE
CHECKED:	WES
CDR JOB #:	

COMMONWEALTH OF PENNSYLVANIA
DEPARTMENT OF TRANSPORTATION
BUREAU OF PROJECT DELIVERY

CDR BRIDGE SYSTEMS, LLC
FOLDED STEEL PLATE GIRDER SYSTEM

GIRDER TABLES - 8

PLOTTED: 4/8/2019 8:10:05 AM
OPERATOR: Robert.Elliott
FILE PATH: P:\CDR BRIDGE\PROPOSALS\P3672.00-Folded_Steel_Plate_Girder\Design\USTN\PennDOT\11-21 Beam Tables.dgn

FSPG DESIGNATION: W44 H24 016 A77

NON-COMPOSITE SECTION PROPERTIES			
I_{xx}	S_x TOP	S_x BOT.	r_x
3892 in^4	338.8 in^3	302.1 in^3	9.93 in

N=8 COMPOSITE SECTION PROPERTIES	EFFECTIVE SLAB WIDTH				
	6'-0"	7'-0"	8'-0"	9'-0"	10'-0"
I_{xx}	9974 in^4	10348 in^4	10667 in^4	10943 in^4	11187 in^4
S_x TOP SLAB	1061.5 in^3	1168.1 in^3	1267.4 in^3	1360.4 in^3	1447.8 in^3
S_x TOP STEEL	5261.5 in^3	7612.0 in^3	11640.6 in^3	20117.2 in^3	49360.1 in^3
S_x BOT. STEEL	443.7 in^3	449.6 in^3	454.7 in^3	459.2 in^3	463.2 in^3

3N=24 COMPOSITE SECTION PROPERTIES	EFFECTIVE SLAB WIDTH				
	6'-0"	7'-0"	8'-0"	9'-0"	10'-0"
I_{xx}	7310 in^4	7660 in^4	7974 in^4	8258 in^4	8516 in^4
S_x TOP SLAB	542.3 in^3	592.6 in^3	641.4 in^3	688.8 in^3	734.8 in^3
S_x TOP STEEL	1222.6 in^3	1411.7 in^3	1616.7 in^3	1839.5 in^3	2082.6 in^3
S_x BOT. STEEL	397.3 in^3	404.2 in^3	410.1 in^3	415.2 in^3	419.8 in^3

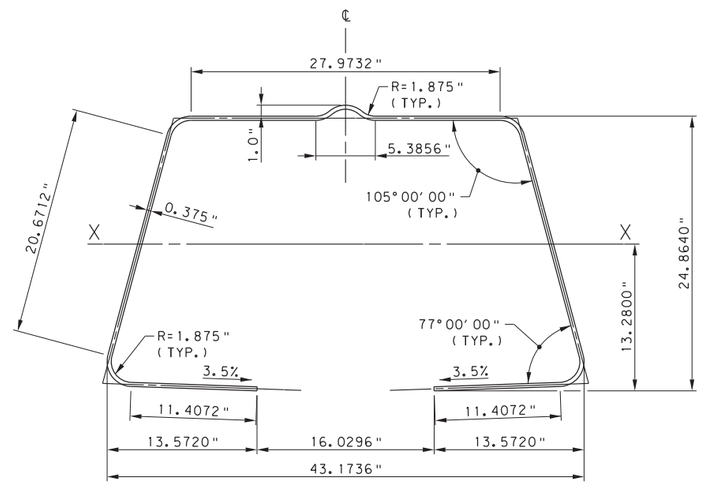

MOMENT CAPACITY	EFFECTIVE SLAB WIDTH				
	6'-0"	7'-0	8'-0"	9'-0"	10'-0"
PLASTIC, M_p	2468 KIP-FT	2558 KIP-FT	2628 KIP-FT	2683 KIP-FT	2726 KIP-FT
NOMINAL, M_n	2232 KIP-FT	2351 KIP-FT	2465 KIP-FT	2555 KIP-FT	2629 KIP-FT

EQUIVALENT PLATE GIRDER FOR STLRFD

TOP FLANGE: 31.25" x 0.375"
WEB: 23.625" x 0.776"
BOTTOM FLANGE: 25.0" x 0.375"

3/8" PLATE INFORMATION

PLATE WIDTH ALONG ℄ PLATE: 105.43 in
AREA: 39.53 in^2
WEIGHT: 134.51 plf

NON-COMPOSITE SECTION PROPERTIES			
I_{xx}	S_x TOP	S_x BOT.	r_x
5077 in^4	443.0 in^3	389.3 in^3	9.89 in

N=8 COMPOSITE SECTION PROPERTIES	EFFECTIVE SLAB WIDTH				
	6'-0"	7'-0"	8'-0"	9'-0"	10'-0"
I_{xx}	12156 in^4	12658 in^4	13089 in^4	13464 in^4	13796 in^4
S_x TOP SLAB	1170.5 in^3	1289.6 in^3	1402.1 in^3	1508.4 in^3	1609.3 in^3
S_x TOP STEEL	4213.2 in^3	5467.0 in^3	7130.6 in^3	9440.7 in^3	12860.5 in^3
S_x BOT. STEEL	562.4 in^3	570.6 in^3	577.5 in^3	583.5 in^3	588.9 in^3

3N=24 COMPOSITE SECTION PROPERTIES	EFFECTIVE SLAB WIDTH				
	6'-0"	7'-0"	8'-0"	9'-0"	10'-0"
I_{xx}	8794 in^4	9213 in^4	9594 in^4	9944 in^4	10266 in^4
S_x TOP SLAB	611.5 in^3	664.1 in^3	715.4 in^3	765.5 in^3	814.6 in^3
S_x TOP STEEL	1278.2 in^3	1445.7 in^3	1623.1 in^3	1811.4 in^3	2011.6 in^3
S_x BOT. STEEL	499.1 in^3	508.2 in^3	516.1 in^3	523.1 in^3	529.3 in^3

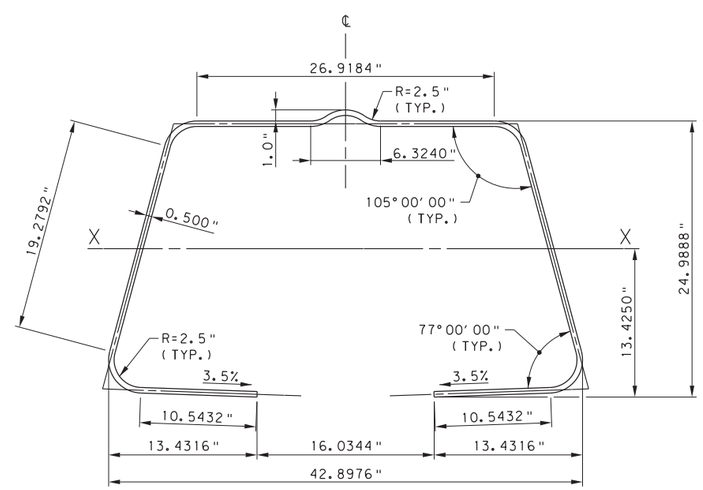

MOMENT CAPACITY	EFFECTIVE SLAB WIDTH				
	6'-0"	7'-0	8'-0"	9'-0"	10'-0"
PLASTIC, M_p	3056 KIP-FT	3156 KIP-FT	3251 KIP-FT	3341 KIP-FT	3417 KIP-FT
NOMINAL, M_n	2750 KIP-FT	2848 KIP-FT	2942 KIP-FT	3061 KIP-FT	3183 KIP-FT

EQUIVALENT PLATE GIRDER FOR STLRFD

TOP FLANGE: 31.25" x 0.5"
WEB: 23.5" x 1.035"
BOTTOM FLANGE: 24.0" x 0.5"

1/2" PLATE INFORMATION

PLATE WIDTH ALONG ℄ PLATE: 104.06 in
AREA: 52.03 in^2
WEIGHT: 177.04 plf

PENNDOT DRAWING #14-604-BDTD (REV.1)

NOTES:

1. FOR INDEX OF DRAWINGS AND SPECIFICATIONS, SEE SHEET NOS. 1 & 2.
2. PLASTIC MOMENT CALCULATED BASED AASHTO 6.10.7.1.2 (COMPOSITE COMPACT SECTION IN POSITIVE FLEXURE).
3. SECTION PROPERTIES BASED ON A CONCRETE STRENGTH OF 4 KSI AND ASTM A709, GRADE 50 STEEL.
4. SECTION PROPERTIES CONSIDER 8" THICK CONCRETE DECK WITH 1/2" INTEGRAL WEARING SURFACE & 0" HAUNCH.
5. SECTION PROPERTIES ASSUME BOTTOM FLANGES ARE LEVEL.
6. COMPOSITE SECTION PROPERTIES ARE BASED ON EFFECTIVE SLAB WIDTH EXCLUDING THE CLOSURE POUR.

9/19/2019

DESIGNER
CDR BRIDGE SYSTEMS
D.L. CLARK BUILDING, SUITE 610
503 MARTINDALE STREET
PITTSBURGH, PA 15212-5746
P: 412-322-0313
F: 412-322-2138
WEB: www.cdrbridges.com

DATE:	04/08/19
SCALE:	NOT TO SCALE
DESIGNED:	RTE
DRAWN:	RTE
CHECKED:	WES
CDR JOB #:	

COMMONWEALTH OF PENNSYLVANIA
DEPARTMENT OF TRANSPORTATION
BUREAU OF PROJECT DELIVERY

CDR BRIDGE SYSTEMS, LLC
FOLDED STEEL PLATE GIRDER SYSTEM

GIRDER TABLES - 9

PLOTTED: 4/8/2019 8:10:27 AM
OPERATOR: Robert.Elliott
FILE PATH: P:\CDR BRIDGE\PROPOSALS\P3672.00-Folded_Steel_Plate_Girder\Design\USTN\PennDOT\11-21 Beam Tables.dgn

FSPG DESIGNATION: W44 H32 018 A77

NON-COMPOSITE SECTION PROPERTIES			
I_{xx}	S_x TOP	S_x BOT.	r_x
6859 in^4	437.8 in^3	410.5 in^3	12.59 in

N=8 COMPOSITE SECTION PROPERTIES	EFFECTIVE SLAB WIDTH				
	6'-0"	7'-0"	8'-0"	9'-0"	10'-0"
I_{xx}	17089 in^4	17731 in^4	18273 in^4	18739 in^4	19145 in^4
S_x TOP SLAB	1503.1 in^3	1661.9 in^3	1811.7 in^3	1953.2 in^3	2087.2 in^3
S_x TOP STEEL	4416.6 in^3	5595.5 in^3	7065.7 in^3	8948.7 in^3	11444.7 in^3
S_x BOT. STEEL	599.5 in^3	607.1 in^3	613.4 in^3	618.8 in^3	623.6 in^3

3N=24 COMPOSITE SECTION PROPERTIES	EFFECTIVE SLAB WIDTH				
	6'-0"	7'-0"	8'-0"	9'-0"	10'-0"
I_{xx}	12519 in^4	13115 in^4	13651 in^4	14137 in^4	14580 in^4
S_x TOP SLAB	756.2 in^3	826.4 in^3	895.1 in^3	962.1 in^3	1027.7 in^3
S_x TOP STEEL	1382.4 in^3	1567.1 in^3	1761.1 in^3	1965.2 in^3	2180.2 in^3
S_x BOT. STEEL	536.9 in^3	546.3 in^3	554.4 in^3	561.4 in^3	567.6 in^3

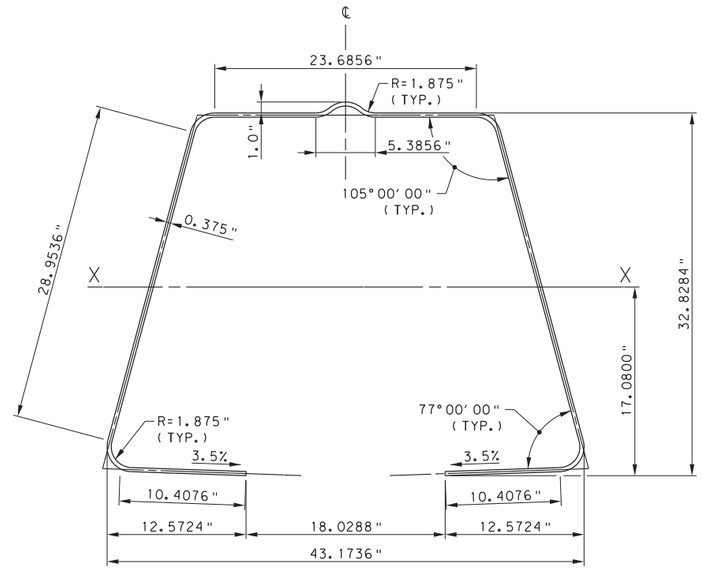

MOMENT CAPACITY	EFFECTIVE SLAB WIDTH				
	6'-0"	7'-0	8'-0"	9'-0"	10'-0"
PLASTIC, M_p	3406 KIP-FT	3500 KIP-FT	3585 KIP-FT	3651 KIP-FT	3703 KIP-FT
NOMINAL, M_n	3188 KIP-FT	3284 KIP-FT	3420 KIP-FT	3530 KIP-FT	3619 KIP-FT

EQUIVALENT PLATE GIRDER FOR STLRFD

TOP FLANGE: 26.75" x 0.375"
WEB: 31.625" x 0.776"
BOTTOM FLANGE: 23.0" x 0.375"

3/8" PLATE INFORMATION

PLATE WIDTH ALONG ℄ PLATE: 115.70 in
AREA: 43.39 in^2
WEIGHT: 147.64 plf

NON-COMPOSITE SECTION PROPERTIES			
I_{xx}	S_x TOP	S_x BOT.	r_x
8951 in^4	573.0 in^3	530.3 in^3	12.53 in

N=8 COMPOSITE SECTION PROPERTIES	EFFECTIVE SLAB WIDTH				
	6'-0"	7'-0"	8'-0"	9'-0"	10'-0"
I_{xx}	20826 in^4	21691 in^4	22432 in^4	23075 in^4	23640 in^4
S_x TOP SLAB	1645.9 in^3	1820.1 in^3	1986.1 in^3	2144.7 in^3	2296.2 in^3
S_x TOP STEEL	4041.4 in^3	4910.1 in^3	5912.1 in^3	7079.7 in^3	8457.3 in^3
S_x BOT. STEEL	761.6 in^3	772.4 in^3	781.4 in^3	789.1 in^3	795.8 in^3

3N=24 COMPOSITE SECTION PROPERTIES	EFFECTIVE SLAB WIDTH				
	6'-0"	7'-0"	8'-0"	9'-0"	10'-0"
I_{xx}	15079 in^4	15786 in^4	16433 in^4	17029 in^4	17579 in^4
S_x TOP SLAB	853.5 in^3	926.2 in^3	997.6 in^3	1067.7 in^3	1136.5 in^3
S_x TOP STEEL	1483.2 in^3	1654.2 in^3	1831.4 in^3	2015.3 in^3	2206.3 in^3
S_x BOT. STEEL	675.2 in^3	687.6 in^3	698.5 in^3	708.0 in^3	716.5 in^3

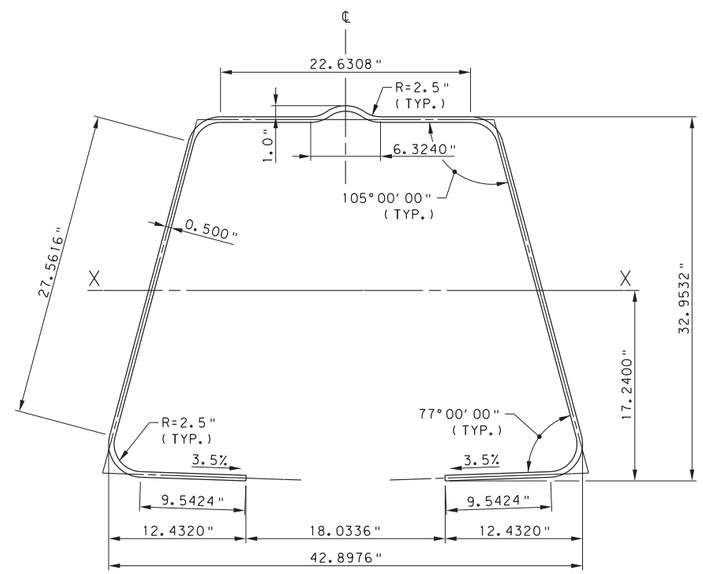

MOMENT CAPACITY	EFFECTIVE SLAB WIDTH				
	6'-0"	7'-0	8'-0"	9'-0"	10'-0"
PLASTIC, M_p	4275 KIP-FT	4384 KIP-FT	4485 KIP-FT	4580 KIP-FT	4669 KIP-FT
NOMINAL, M_n	3980 KIP-FT	4092 KIP-FT	4197 KIP-FT	4296 KIP-FT	4427 KIP-FT

EQUIVALENT PLATE GIRDER FOR STLRFD

TOP FLANGE: 26.75" x 0.5"
WEB: 31.5" x 1.035"
BOTTOM FLANGE: 22.0" x 0.5"

1/2" PLATE INFORMATION

PLATE WIDTH ALONG ℄ PLATE: 114.34 in
AREA: 57.17 in^2
WEIGHT: 194.53 plf

PENNDOT DRAWING #14-604-BDTD (REV.1)

NOTES:

1. FOR INDEX OF DRAWINGS AND SPECIFICATIONS, SEE SHEET NOS. 1 & 2.
2. PLASTIC MOMENT CALCULATED BASED AASHTO 6.10.7.1.2 (COMPOSITE COMPACT SECTION IN POSITIVE FLEXURE).
3. SECTION PROPERTIES BASED ON A CONCRETE STRENGTH OF 4 KSI AND ASTM A709, GRADE 50 STEEL.
4. SECTION PROPERTIES CONSIDER 8" THICK CONCRETE DECK WITH 1/2" INTEGRAL WEARING SURFACE & 0" HAUNCH.
5. SECTION PROPERTIES ASSUME BOTTOM FLANGES ARE LEVEL.
6. COMPOSITE SECTION PROPERTIES ARE BASED ON EFFECTIVE SLAB WIDTH EXCLUDING THE CLOSURE POUR.

9/19/2019

DESIGNER
CDR BRIDGE SYSTEMS
D.L. CLARK BUILDING, SUITE 610
503 MARTINDALE STREET
PITTSBURGH, PA 15212-5746
P: 412-322-0313
F: 412-322-2138
WEB: www.cdrbridges.com

DATE:	04/08/19
SCALE:	NOT TO SCALE
DESIGNED:	RTE
DRAWN:	RTE
CHECKED:	WES
CDR JOB #:	

COMMONWEALTH OF PENNSYLVANIA
DEPARTMENT OF TRANSPORTATION
BUREAU OF PROJECT DELIVERY

CDR BRIDGE SYSTEMS, LLC
FOLDED STEEL PLATE GIRDER SYSTEM

GIRDER TABLES - 10

PLOTTED: 4/8/2019 8:10:52 AM
OPERATOR: Robert.Elliott
FILE PATH: P:\CDR BRIDGE\PROPOSALS\P3672.00-Folded_Steel_Plate_Girder\Design\USTN\PennDOT\11-21 Beam Tables.dgn

FSPG DESIGNATION: W44 H34 020 A77

NON-COMPOSITE SECTION PROPERTIES			
I_{xx}	S_x TOP	S_x BOT.	r_x
7551 in^4	457.5 in^3	422.5 in^3	13.14 in

N=8 COMPOSITE SECTION PROPERTIES	EFFECTIVE SLAB WIDTH				
	6'-0"	7'-0"	8'-0"	9'-0"	10'-0"
I_{xx}	18717 in^4	19418 in^4	20009 in^4	20518 in^4	20960 in^4
S_x TOP SLAB	1593.9 in^3	1763.6 in^3	1923.8 in^3	2075.5 in^3	2219.3 in^3
S_x TOP STEEL	4411.3 in^3	5531.4 in^3	6897.7 in^3	8600.0 in^3	10778.1 in^3
S_x BOT. STEEL	621.2 in^3	629.1 in^3	635.7 in^3	641.4 in^3	646.3 in^3

3N=24 COMPOSITE SECTION PROPERTIES	EFFECTIVE SLAB WIDTH				
	6'-0"	7'-0"	8'-0"	9'-0"	10'-0"
I_{xx}	13720 in^4	14371 in^4	14957 in^4	15489 in^4	15973 in^4
S_x TOP SLAB	800.0 in^3	874.4 in^3	947.1 in^3	1018.2 in^3	1087.7 in^3
S_x TOP STEEL	1421.6 in^3	1608.2 in^3	1803.6 in^3	2008.3 in^3	2223.1 in^3
S_x BOT. STEEL	554.9 in^3	564.9 in^3	573.5 in^3	580.9 in^3	587.5 in^3

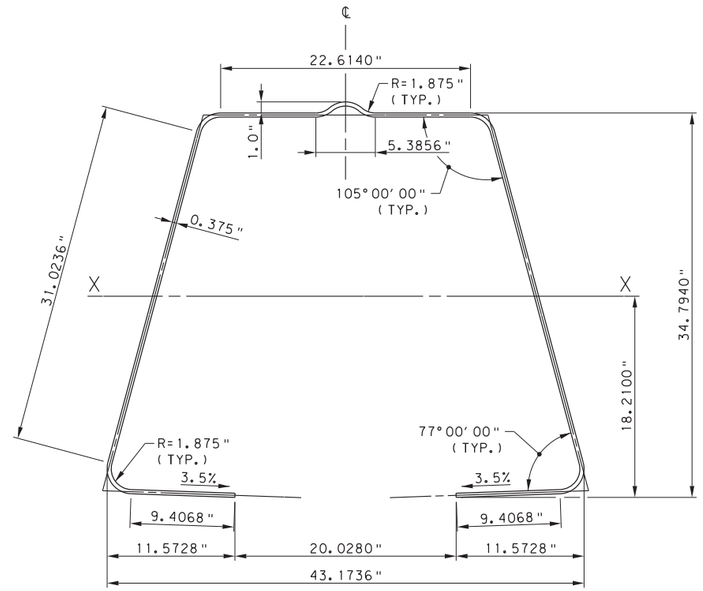

MOMENT CAPACITY	EFFECTIVE SLAB WIDTH				
	6'-0"	7'-0	8'-0"	9'-0"	10'-0"
PLASTIC, M_p	3584 KIP-FT	3679 KIP-FT	3765 KIP-FT	3832 KIP-FT	3886 KIP-FT
NOMINAL, M_n	3377 KIP-FT	3475 KIP-FT	3609 KIP-FT	3721 KIP-FT	3812 KIP-FT

EQUIVALENT PLATE GIRDER FOR STLRFD

TOP FLANGE: 25.75" x 0.375"
WEB: 33.625" x 0.776"
BOTTOM FLANGE: 21.0" x 0.375"

3/8" PLATE INFORMATION

PLATE WIDTH ALONG ℄ PLATE: 116.77 in
AREA: 43.79 in^2
WEIGHT: 149.01 plf

NON-COMPOSITE SECTION PROPERTIES			
I_{xx}	S_x TOP	S_x BOT.	r_x
9847 in^4	598.5 in^3	545.6 in^3	13.08 in

N=8 COMPOSITE SECTION PROPERTIES	EFFECTIVE SLAB WIDTH				
	6'-0"	7'-0"	8'-0"	9'-0"	10'-0"
I_{xx}	22800 in^4	23745 in^4	24554 in^4	25257 in^4	25874 in^4
S_x TOP SLAB	1742.8 in^3	1928.3 in^3	2105.3 in^3	2274.6 in^3	2436.7 in^3
S_x TOP STEEL	4084.3 in^3	4932.2 in^3	5898.2 in^3	7008.4 in^3	8297.0 in^3
S_x BOT. STEEL	788.4 in^3	799.9 in^3	809.4 in^3	817.5 in^3	824.5 in^3

3N=24 COMPOSITE SECTION PROPERTIES	EFFECTIVE SLAB WIDTH				
	6'-0"	7'-0"	8'-0"	9'-0"	10'-0"
I_{xx}	16521 in^4	17292 in^4	17999 in^4	18649 in^4	19250 in^4
S_x TOP SLAB	902.7 in^3	979.5 in^3	1054.9 in^3	1129.1 in^3	1201.9 in^3
S_x TOP STEEL	1529.4 in^3	1702.9 in^3	1882.4 in^3	2068.2 in^3	2260.5 in^3
S_x BOT. STEEL	697.2 in^3	710.3 in^3	721.7 in^3	731.8 in^3	740.8 in^3

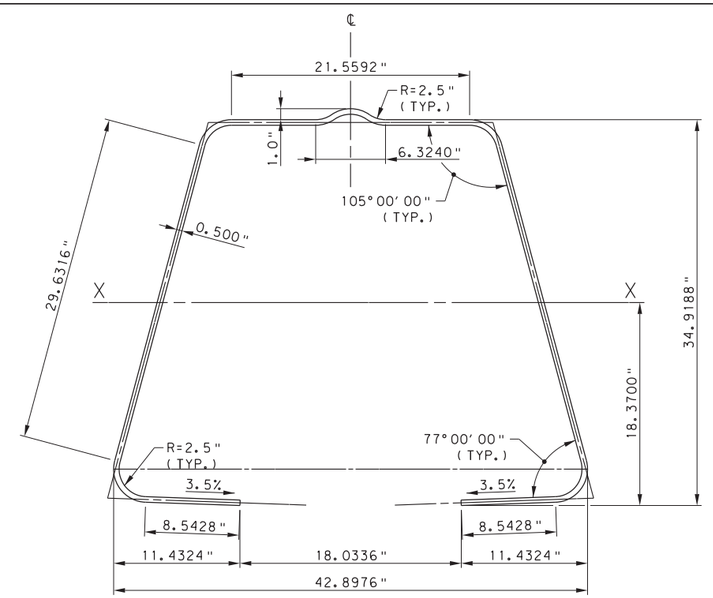

MOMENT CAPACITY	EFFECTIVE SLAB WIDTH				
	6'-0"	7'-0	8'-0"	9'-0"	10'-0"
PLASTIC, M_p	4506 KIP-FT	4616 KIP-FT	4719 KIP-FT	4814 KIP-FT	4904 KIP-FT
NOMINAL, M_n	4222 KIP-FT	4336 KIP-FT	4444 KIP-FT	4545 KIP-FT	4673 KIP-FT

EQUIVALENT PLATE GIRDER FOR STLRFD

TOP FLANGE: 25.75" x 0.5"
WEB: 33.5" x 1.035"
BOTTOM FLANGE: 20.0" x 0.5"

1/2" PLATE INFORMATION

PLATE WIDTH ALONG ℄ PLATE: 115.41 in
AREA: 57.70 in^2
WEIGHT: 196.34 plf

PENNDOT DRAWING #14-604-BDTD (REV.1)

NOTES:

1. FOR INDEX OF DRAWINGS AND SPECIFICATIONS, SEE SHEET NOS. 1 & 2.
2. PLASTIC MOMENT CALCULATED BASED AASHTO 6.10.7.1.2 (COMPOSITE COMPACT SECTION IN POSITIVE FLEXURE).
3. SECTION PROPERTIES BASED ON A CONCRETE STRENGTH OF 4 KSI AND ASTM A709, GRADE 50 STEEL.
4. SECTION PROPERTIES CONSIDER 8" THICK CONCRETE DECK WITH 1/2" INTEGRAL WEARING SURFACE & 0" HAUNCH.
5. SECTION PROPERTIES ASSUME BOTTOM FLANGES ARE LEVEL.
6. COMPOSITE SECTION PROPERTIES ARE BASED ON EFFECTIVE SLAB WIDTH EXCLUDING THE CLOSURE POUR.

9/19/2019

DESIGNER
CDR BRIDGE SYSTEMS
D.L. CLARK BUILDING, SUITE 610
503 MARTINDALE STREET
PITTSBURGH, PA 15212-5746
P: 412-322-0313
F: 412-322-2138
WEB: www.cdrbridges.com

DATE:	04/08/19
SCALE:	NOT TO SCALE
DESIGNED:	RTE
DRAWN:	RTE
CHECKED:	WES
CDR JOB #:	

COMMONWEALTH OF PENNSYLVANIA
DEPARTMENT OF TRANSPORTATION
BUREAU OF PROJECT DELIVERY

CDR BRIDGE SYSTEMS, LLC
FOLDED STEEL PLATE GIRDER SYSTEM

GIRDER TABLES - 11

PLOTTED: 4/8/2019 8:11:10 AM
OPERATOR: Robert.Elliott
FILE PATH: P:\CDR BRIDGE\PROPOSALS\P3672.00-Folded_Steel_Plate_Girder\Design\USTN\PennDOT\11-21 Beam Tables.dgn