Precast U Girder Bridges

Content of Presentation - Precast U Girder Bridges

MODJESKI and MASTERS
Experience great bridges.

Gregg A.Reese, P.E., President,
Summit Engineering Group, Inc.
A Modjeski and Masters Company

Development of the Concept in Colorado

New Penn DOT U Girder Standards

Case Study – JT Butler Expressway, Jacksonville, FL

Summary of Curved Precast U/Box Girder Bridge Projects

Early Curved Precast Girder Bridges

- 1960 – Seattle Monorail System
- 1969 – Disney World Monorail
- 1983 – I-95 Airport Ramp Bridge, Philadelphia
- 1986 – Expo 86 Vancouver Sky Train
- 1987 – Detroit Central Area Transit System
- 1994 – Getty Center Tramway
- 1998 – Park Avenue Overpass at IH25, Curved Site Precast U girders
- 2000 – Parker Road / IH225, Curved CIP U girders
- 2006 – Arbor Road Overpass, Lancaster County, Nebraska

Colorado

- 2005 – 270 / IH25 Ramp K
- 2008 – E470 / IH70 Ramp H
- 2008 – 270 / IH76 Ramp Y
- 2008 – Austin Bluffs over Union
- 2008 – IH25/Trinidad Phase I
- 2009 – SH58 / IH70 Ramp A
- 2010 – IH25/Trinidad Phase II
- 2012 – C470 @ Santa Fe Drive
- 2013 – I25 Ramp 1 @ Santa Fe Drive
- 2015 – Santa Fe over the Platte River
- 2015 – I25 Ramp 5N, (Designed)

Florida

- 2015 – Boggy Creek Interchange, Orlando FL
- 2016 – J T Butler Expressway Flyover 1, (Under Construction)
- 2017 – S.R. 429 Wekiva Parkway Systems Interchange (Under Construction)

Precast U Girder Bridges in Colorado

IH25 SB Ramp K, Denver CO

SH58 / IH70 Ramp A Flyover, Golden, CO

Reinforcing Cage in Curved U Girder Forms Prior to Casting

Curved U84 Girders in Storage Area

Design Features of Bijou St. Bridge

- *Thickened Bottom Slab over Piers*
- *Varying Web Thickness*
- *Cantilever PT Anchors in Webs*
- *Shoring Support Slabs*

Completed Bridge featuring enhanced aesthetics.
All Structural enhancements not visible

Girder Transportation

- Shipped to job site on high load, steerable trailers

Girder Erection

- Girders Set on Temporary Shoring with Hydraulic and Crawler Cranes
- Curved Girders Braced to Shoring

Girder Erection

- Curved Girders Lifted with offset spreader bar to balance roll

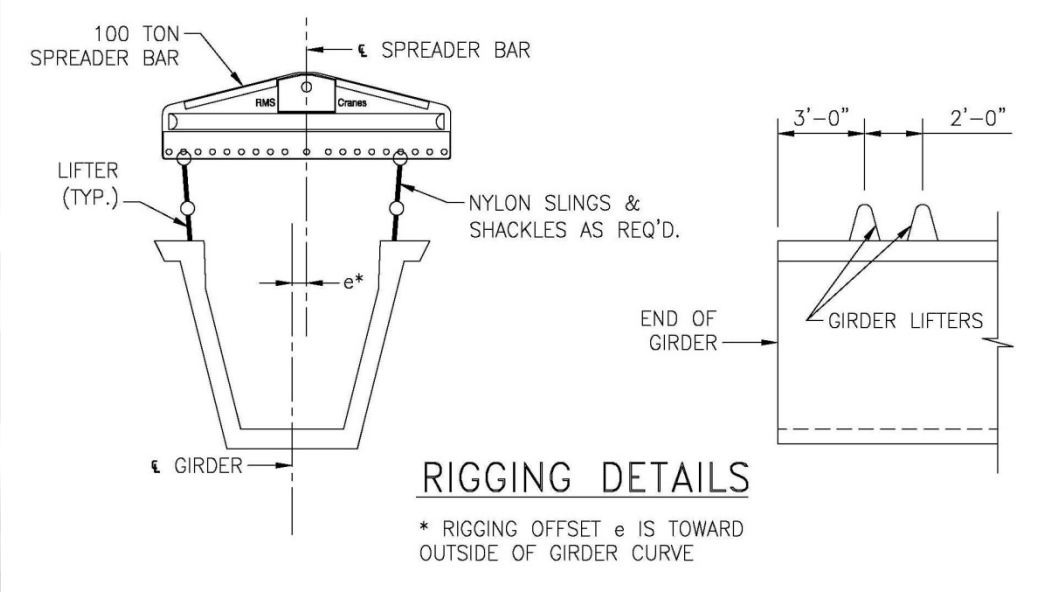

Erection Mishap in 2007
Crane Boom Failure,
Girder Fell 20’ hitting Crane
Crane was totaled
U Girder was placed on Abutments with minor repair to top flange

Engineered Temporary Shoring

- Falsework Towers and Straddle Bents

- Ramp K on 45’ Tall Falsework Towers @ Pier 5

Construction Engineering – Temporary Shoring

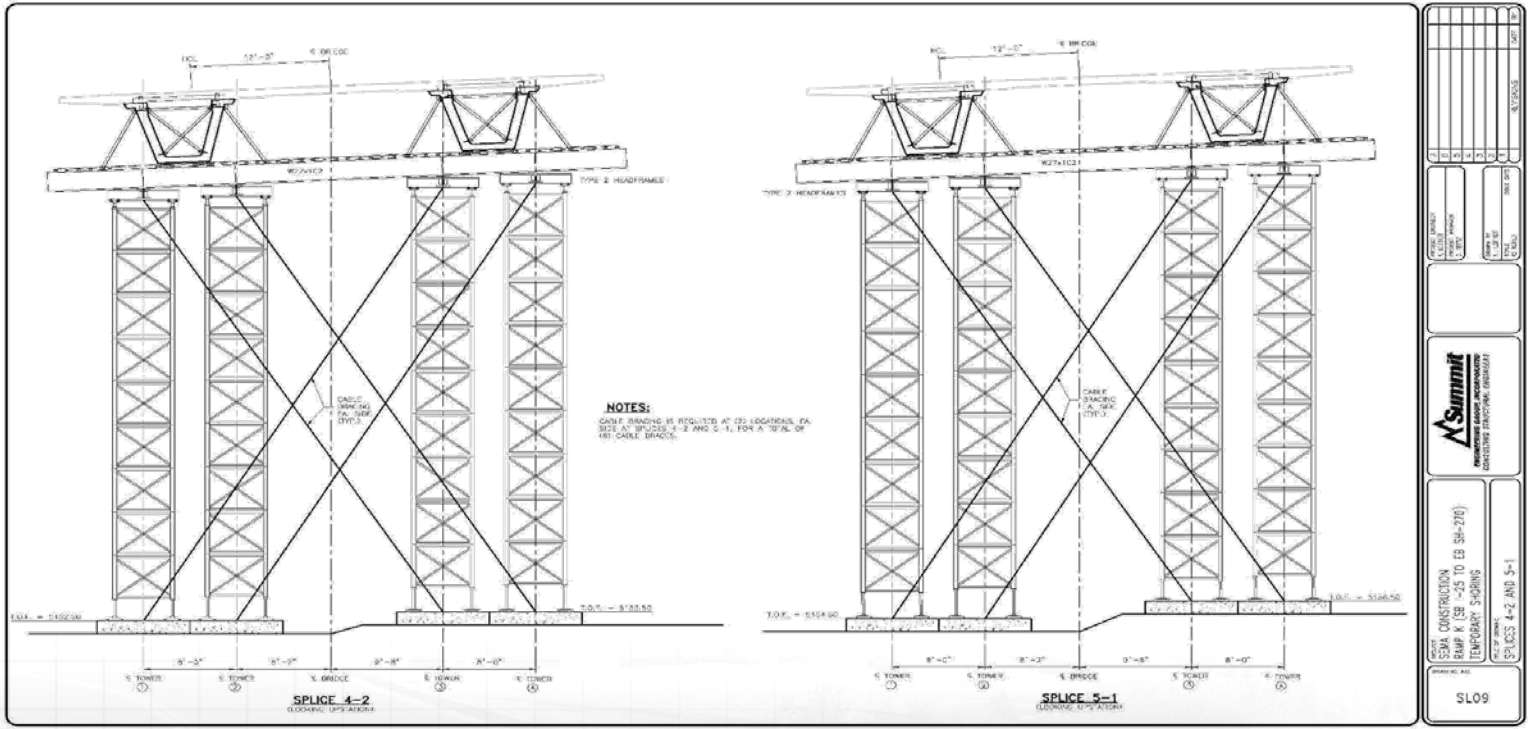

Construction Engineering - Temporary Shoring

- Majority of Projects Constructed Over Existing Interchanges on Curved Alignment

Temporary Shoring – Straddle Bents

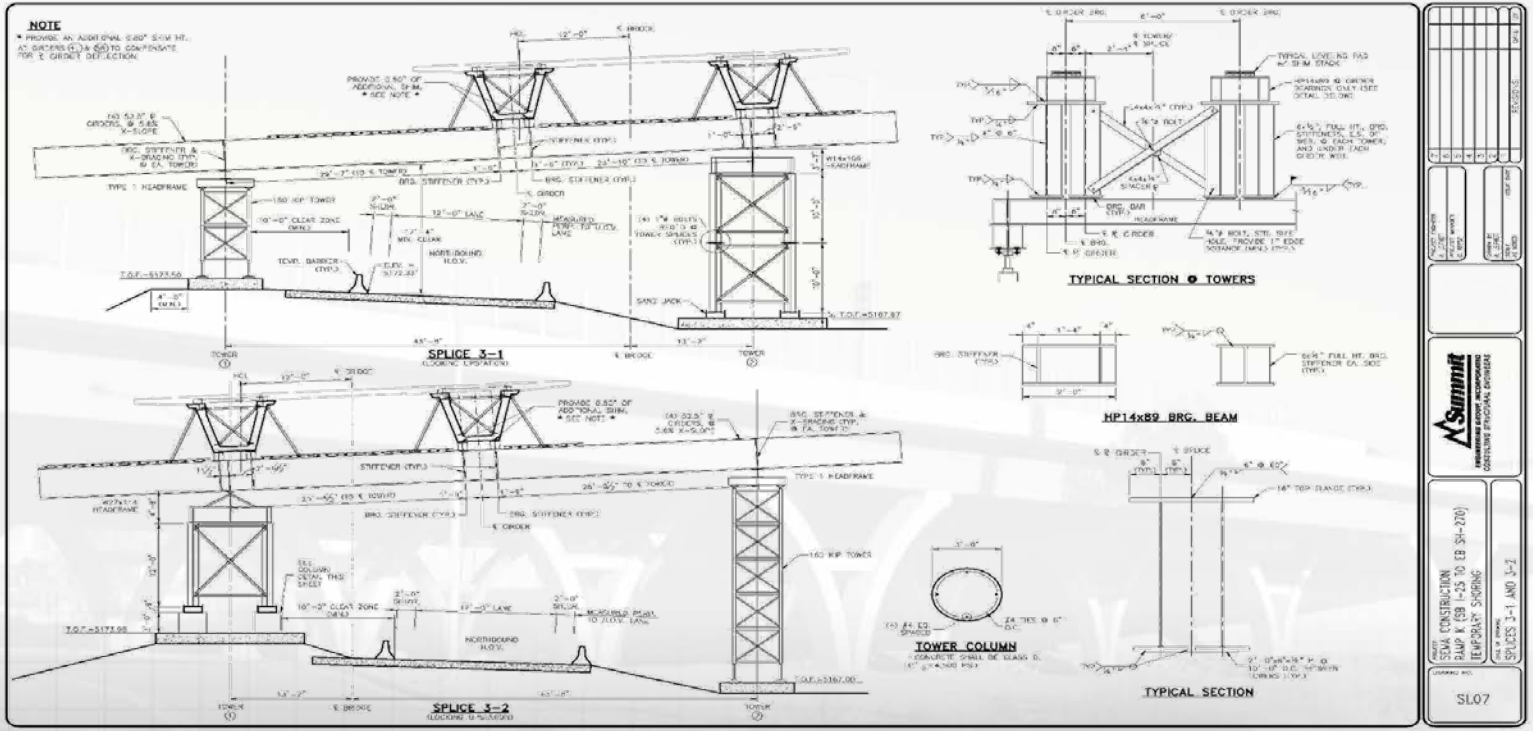

Temporary Shoring During Construction

- Ramp K Girders supported on Straddle Bents
- HOV lanes open during construction

Temporary Shoring During Construction

- Ramp Y Safety Rail protecting
- Falsework Bents Adjacent to IH76 Traffic

Temporary Shoring During Construction – Strong Backs

- Ramp K Erection completed using strong backs over IH25 and 270 Bridge

Erection of Precast U-Girders

- Only Vertical Temporary Shoring required
- Adaptable to variable site conditions
- Able to accommodate Maintenance of Traffic

Maintenance of Traffic - Third Level Flyover Erection

Final Girder Erected over SH270 from Cantilevered Precast U-Girders

Maintenance-Of-Traffic – UPRR Rail Yard

- Bijou Street Bridge Erection used Strongbacks to avoid ground supported falsework

Maintenance-Of-Traffic – UPRR Rail Yard

- Bijou Street Bridge Erection of Span 3 over Rail Yard during continuous rail traffic

Maintenance-Of-Traffic

- Bijou Street Bridge Span 3 set over Rail Yard, 148’ Clear Opening

Casting of Lid Slab - Precast U-Girders

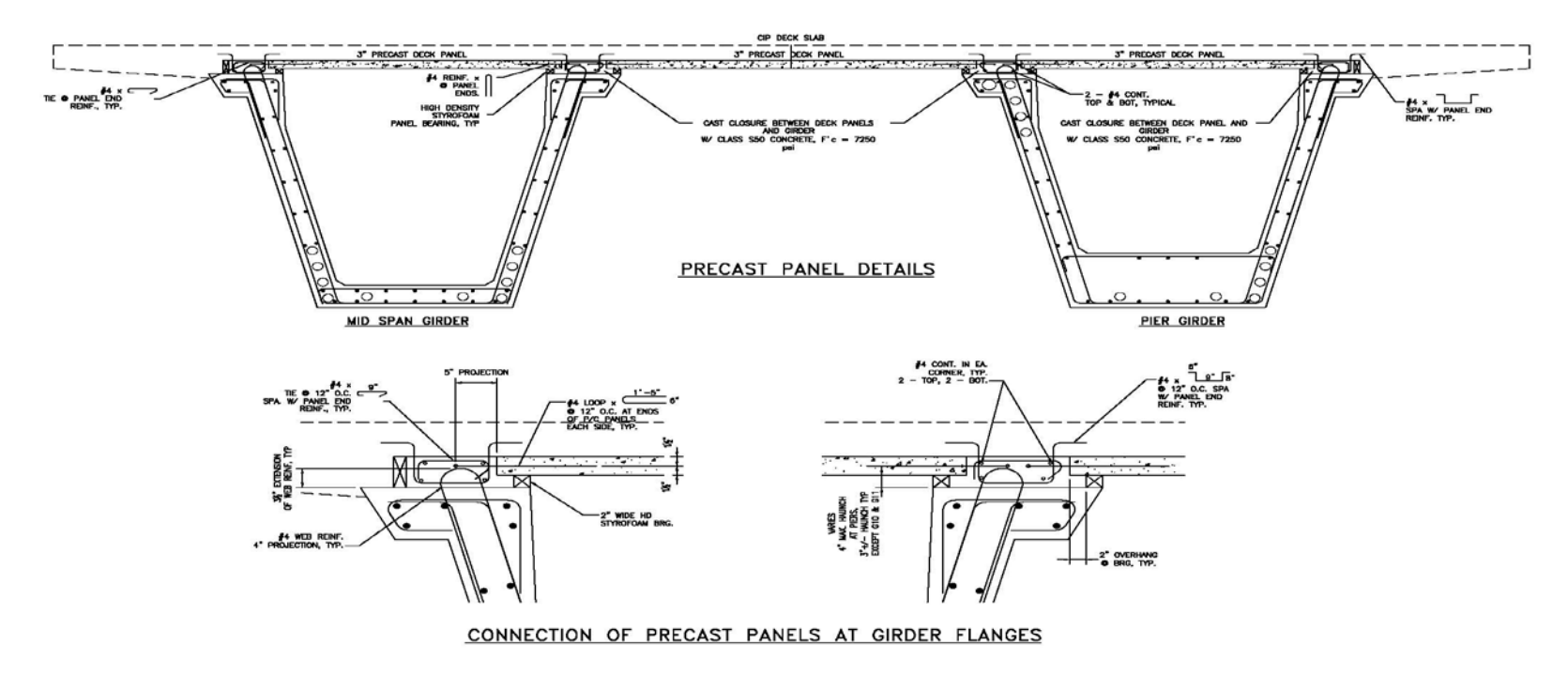

- Lid Slab Cast Prior to Stressing Longitudinal PT
- Creates a Closed Cell Box to increase Torsional Strength and Rigidity

Erection of Precast U-Girders

- Lid Slab can be CIP or use Precast Deck Panels
- Diaphrams at Piers and Abutments cast prior to stressing longitudinal PT

Post Tensioning of Girder Lines

- Expansion Pier Diaphragm cast at Abutment w/ PT Anchorages

Integral Interior Piers

- Transversely Post Tensioned Pier Cap
- Integral with Superstructure
- Transversely and Torsionally Rigid
- Bearings eliminated wherever possible
- Longitudinally Flexible Piers
- Flexible Drilled Shaft Foundations
- Soil Structure Interaction utilized in design

Post Tensioning Details at Expansion Piers

- Interior Expansion Pier – Ramp A
- “Tongue Section set on Permanent Bearings
- CIP Diaphragms cast at end of each girder.

Post Tensioning Details - Expansion Piers

- Girders set on precast “tongue” section
- CIP Diaphragm cast against end of girder doubles at PT anchorage block
- Diaphragms designed to allow double end stressing with short stroke ram

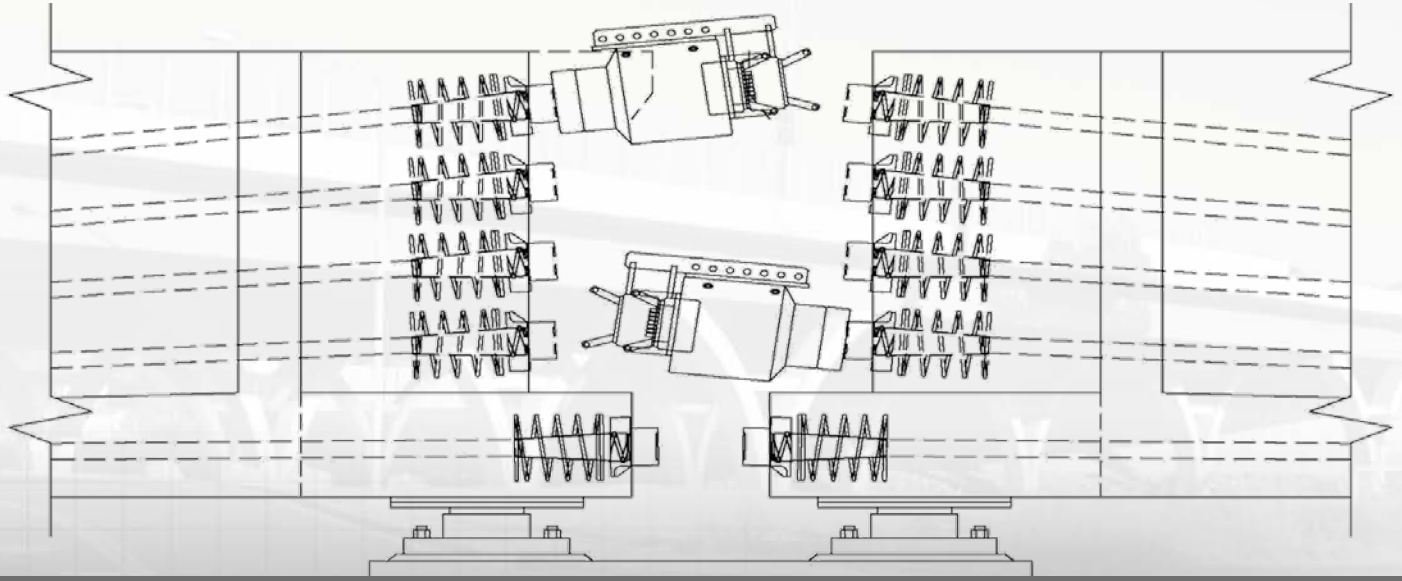

Designed for Future Deck Replacement

- Post Tensioning Stressed
- Falsework Removed
- No intermediate diaphragms
- Decks cast in unshored condition

Casting of Deck Slab

- Ramp K - Precast Deck Panels between Girders

Casting of Deck Slab

- Overhang Forms Graded,
- Deck Reinforcing places
- Deck Slab Cast

Deck Cast and Project Complete – SH58 Ramp A Bridge, Golden Colorado

Project Cost Savings – Steel vs. Concrete

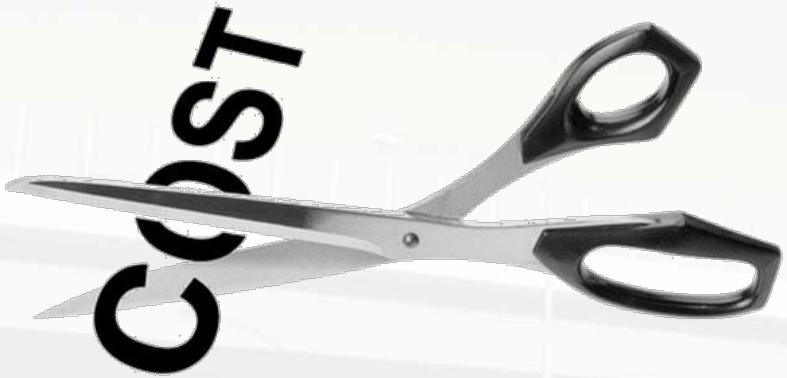

270 Ramp Y Cost Data

Item	Steel Design	Curved Precast
Girder Costs	$5,125,000	$3,086,240
Erection Costs	$1,025,000	$890,000
Falsework Costs	$50,000	$250,000
Post-Tensioning Costs	$0	$506,000
Total	$6,200,000	$4,732,240
Cost/Ft.	$1,393/Ft.	$1,063/Ft/

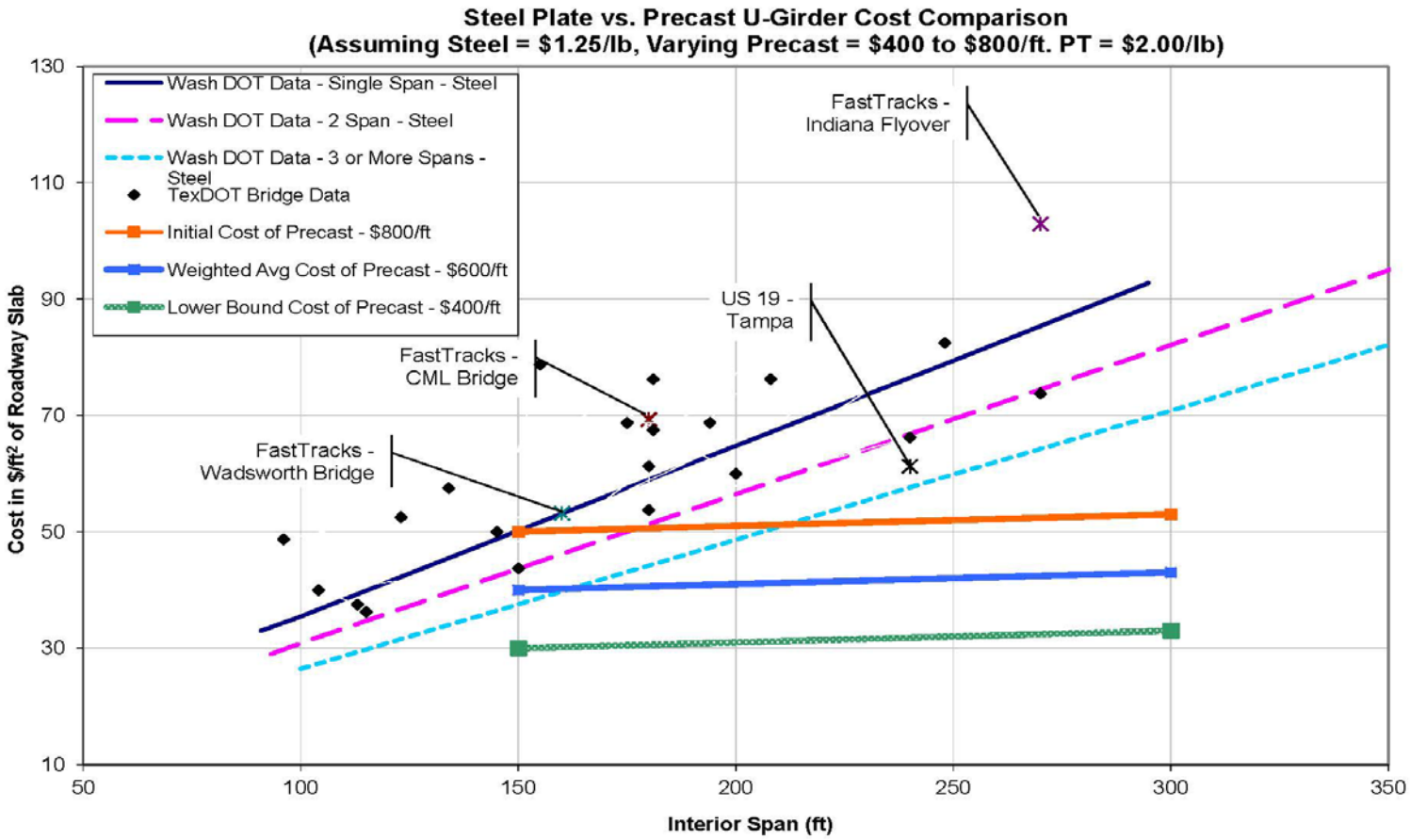

Superstructure Costs Based on Average Values and Actual Data

Summit ENGINEERING GROUP INC
A MODJESKI and MASTERS COMPANY

PennDOT Standards for Precast U Girders

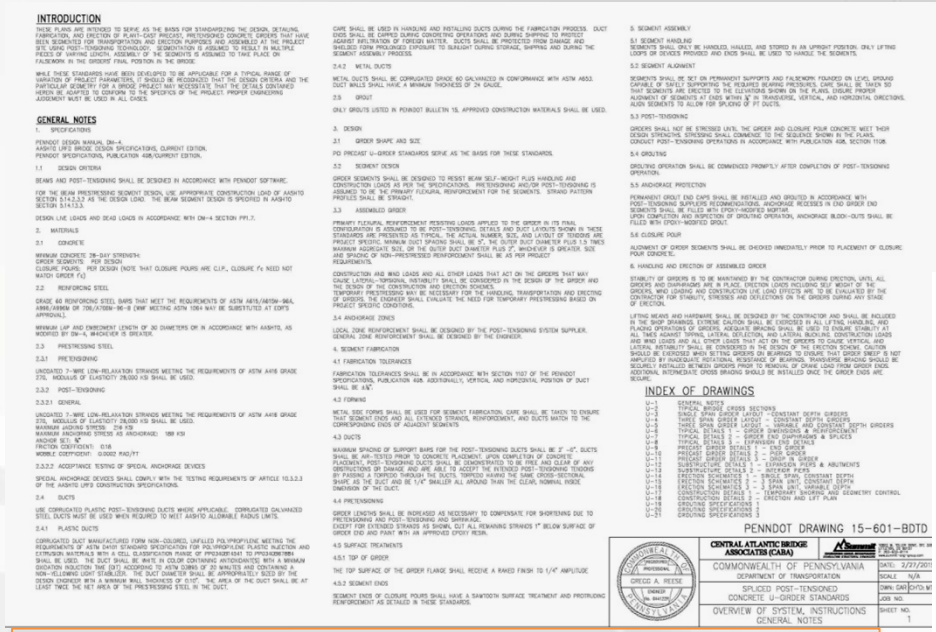

INTRODUCTION

GENERAL NOTES

INDEX OF DRAWINGS

PENNDOT DRAWING 15-601-BDTD

CENTRAL ATLANTIC BRIDGE ASSOCIATES (CABA)

COMMONWEALTH OF PENNSYLVANIA
DEPARTMENT OF TRANSPORTATION

SPLICED POST-TENSIONED CONCRETE U-GIRDER STANDARDS

OVERVIEW OF SYSTEM, INSTRUCTIONS GENERAL NOTES

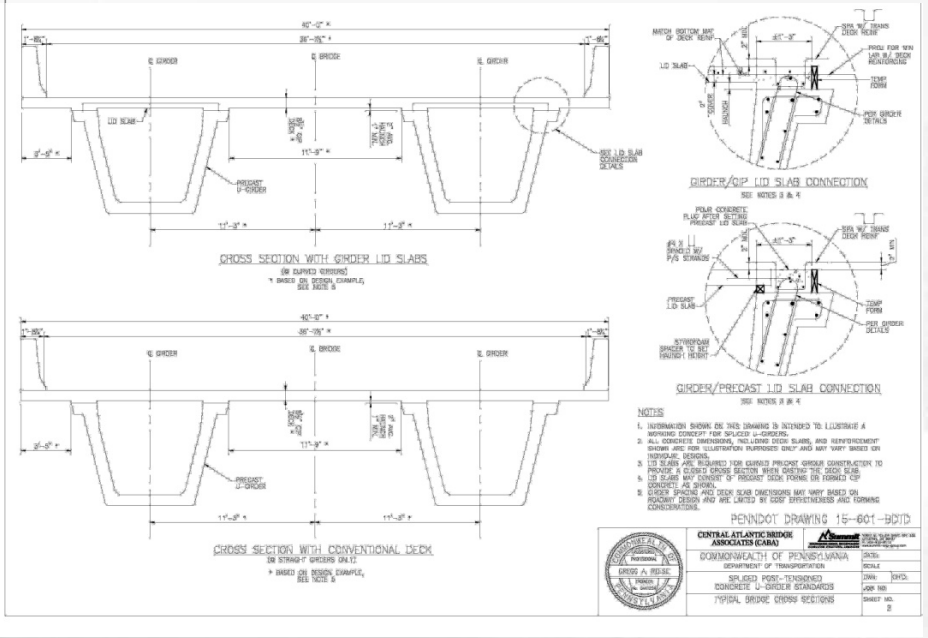

CROSS SECTION WITH GIRDER LID SLABS

CROSS SECTION WITH CONVENTIONAL DECK

GIRDER/CIP LID SLAB CONNECTION

GIRDER/PRECAST LID SLAB CONNECTION

NOTES

PENNDOT DRAWING 15-601-BDTD

CENTRAL ATLANTIC BRIDGE ASSOCIATES (CABA)

COMMONWEALTH OF PENNSYLVANIA
DEPARTMENT OF TRANSPORTATION

SPLICED POST-TENSIONED CONCRETE U-GIRDER STANDARDS

TYPICAL BRIDGE CROSS SECTIONS

- 21 Drawings and Supporting Calculations
- 3 Span Configurations Represented
- Approved and Adopted, Summer 2016

MODJESKI and MASTERS
Experience great bridges.

Reinforcing Details for Developed for Various Design Conditions

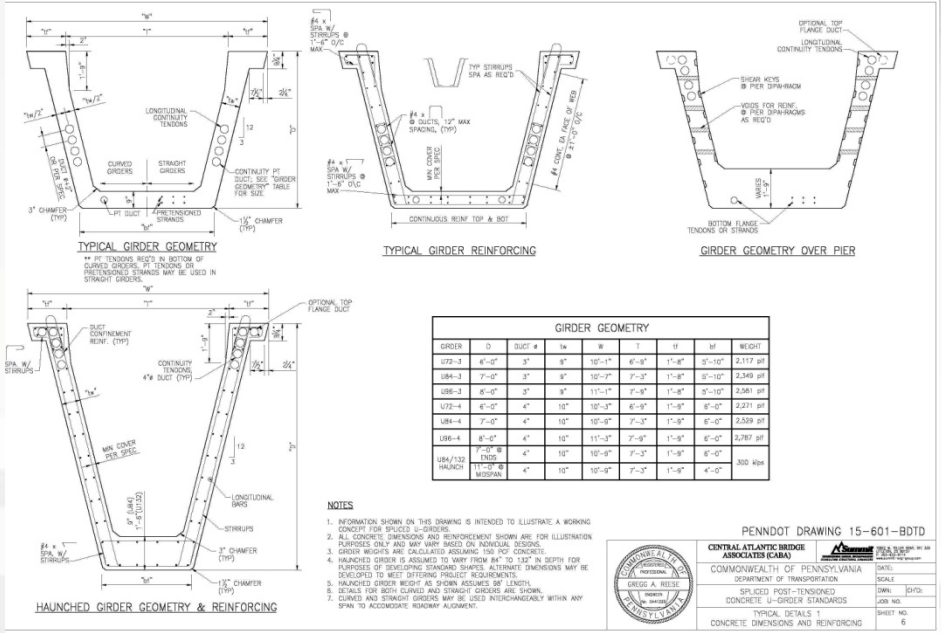

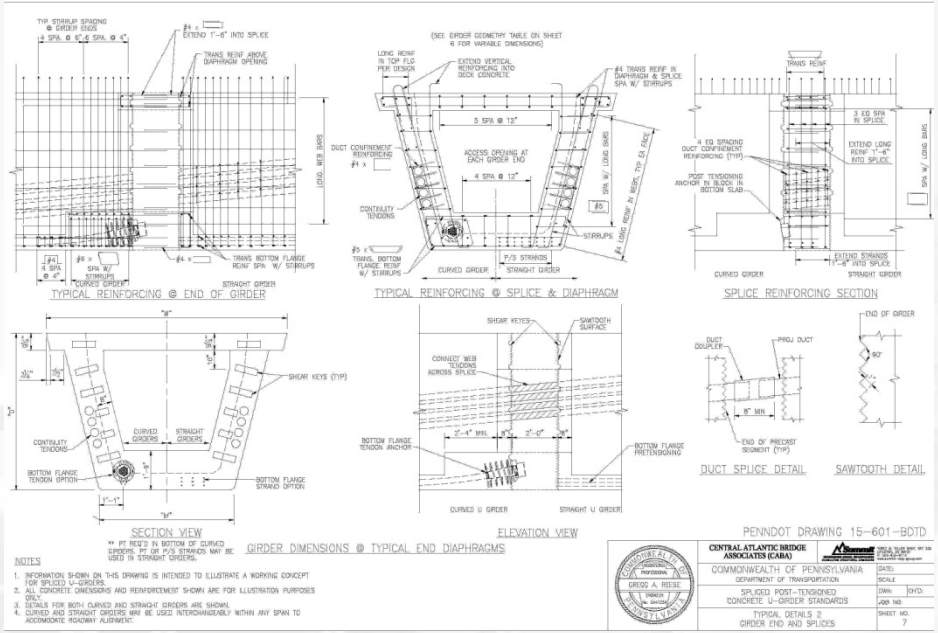

Constant Depth and Haunched Cross Sections

PennDOT U Girder Standards

MODJESKI and MASTERS
Experience great bridges.

Summit ENGINEERING GROUP, INC.
A MODJESKI and MASTERS COMPANY

PennDOT U Girder Standards

Prototype Girder and Post Tensioning Layouts

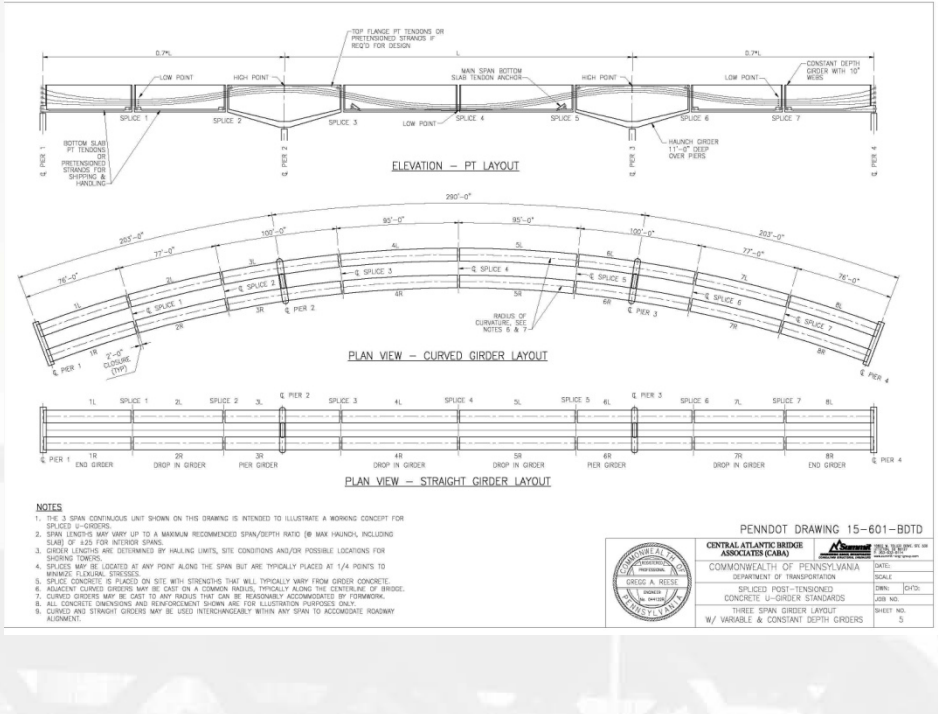

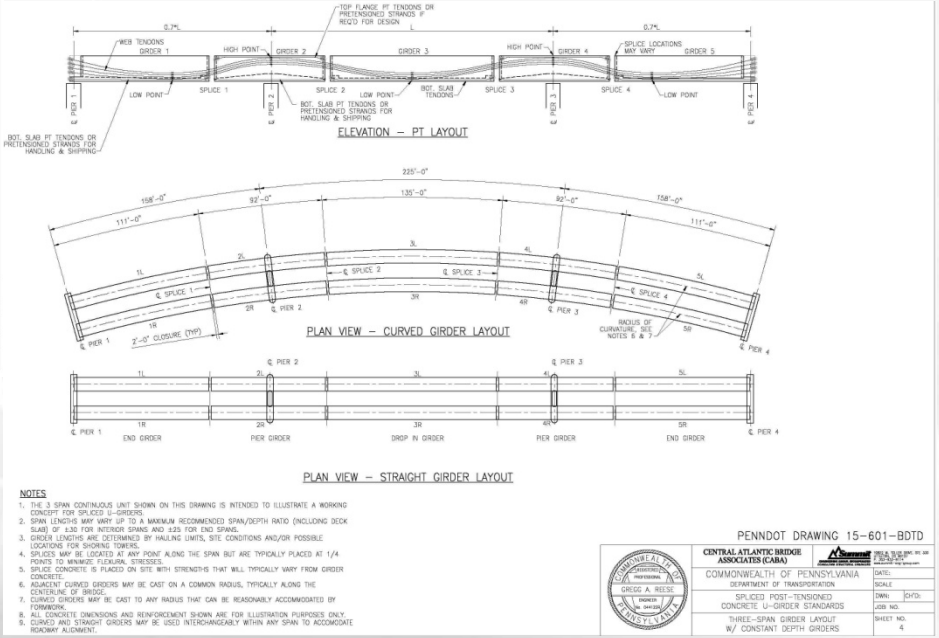

Span Ranges from 200’ to 300’
Curved and Straight Alignments

PennDOT U Girder Standards

Post Tensioned Layout Details

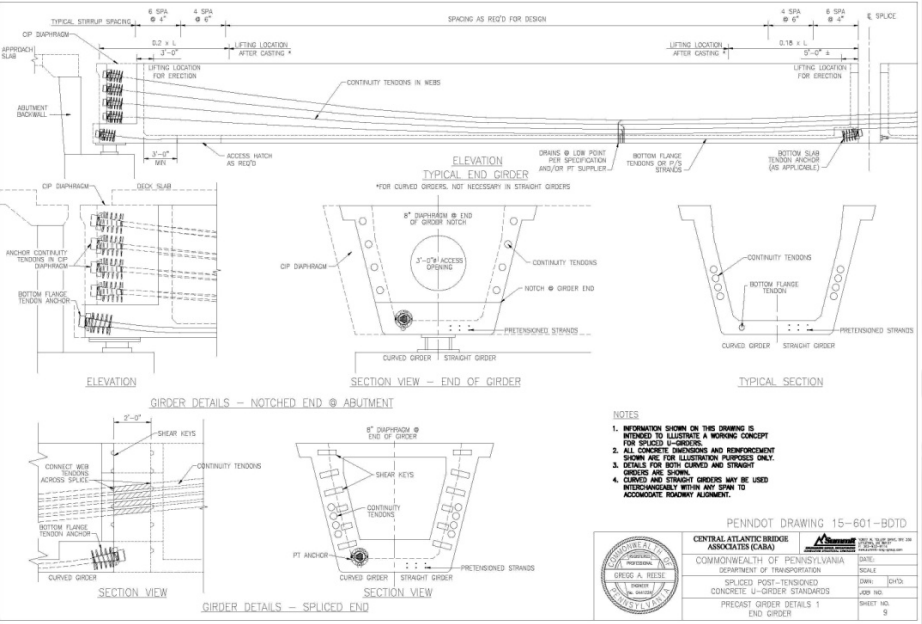

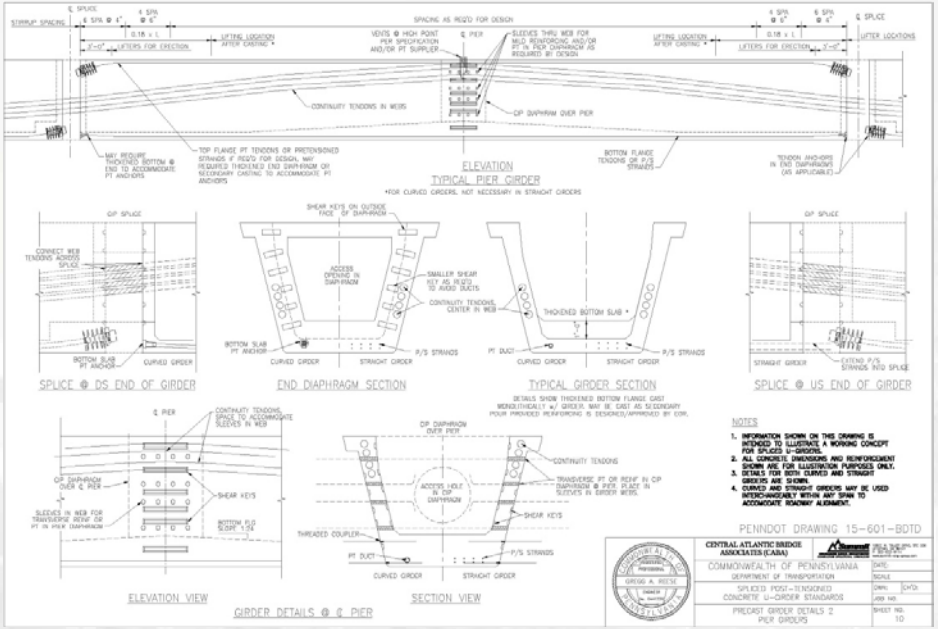

End Span and Pier Girder Conditions

PennDOT U Girder Standards

Example Erection Schematics

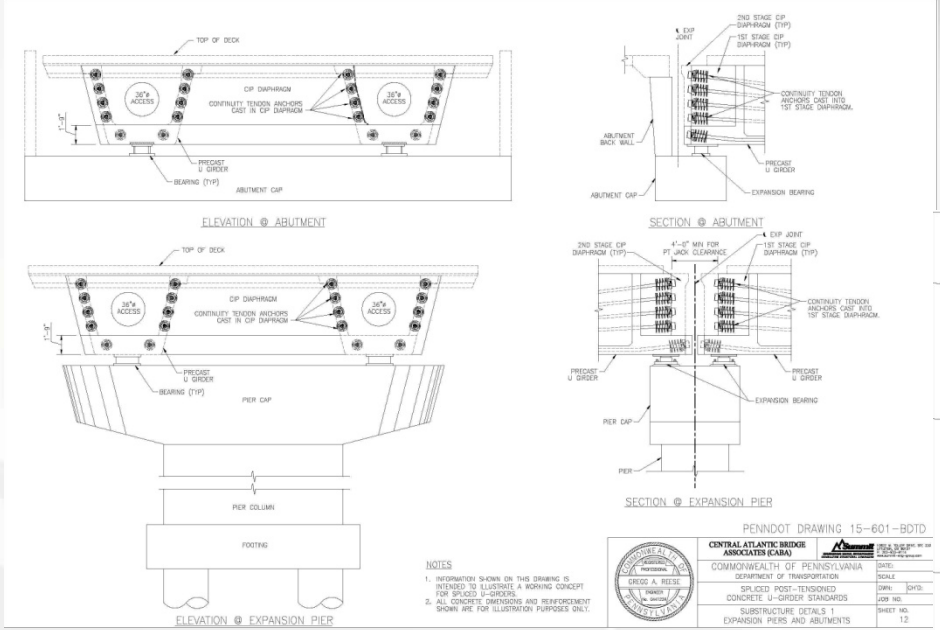

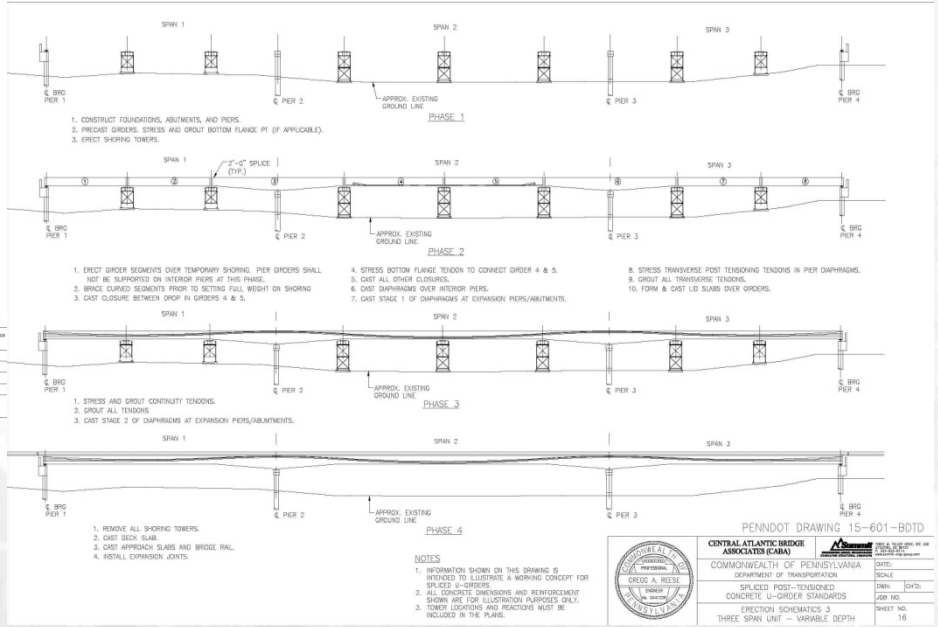

Pro Type Substructure / Superstructure Details

Detailed Grouting and Load Rating Procedures

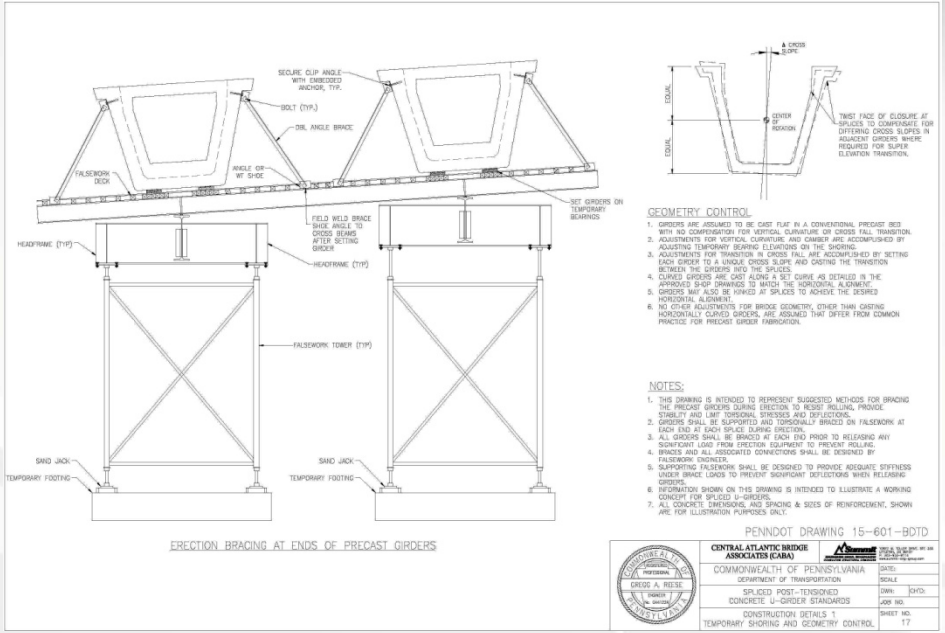

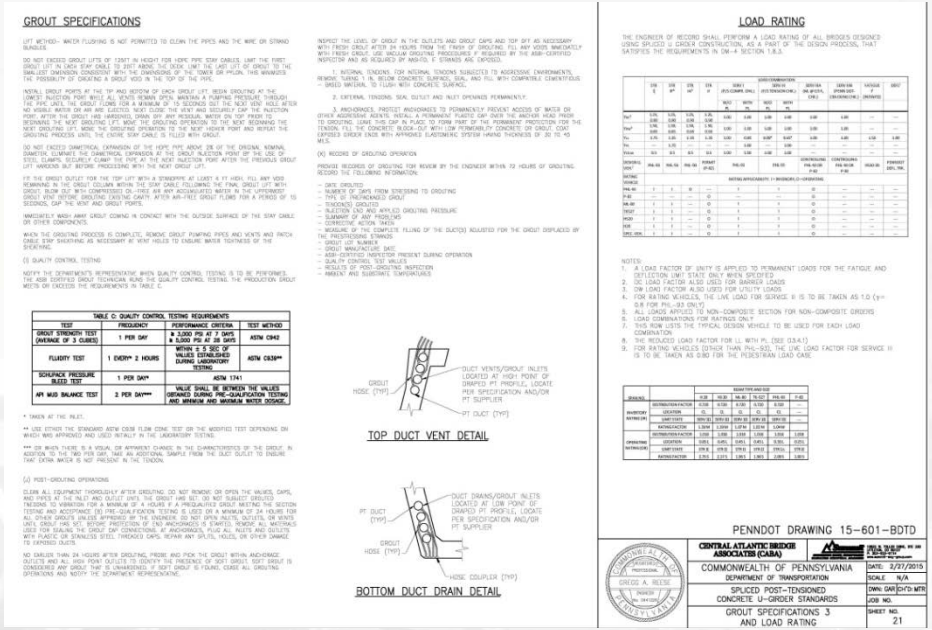

Temporary Shoring and Erection Recommendations

PennDOT U Girder Standards

MODJESKI and MASTERS
Experience great bridges.

Summit ENGINEERING GROUP, INC.
A MODJESKI and MASTERS COMPANY

Summit ENGINEERING GROUP, INC.
A MODJESKI and MASTERS COMPANY

MODJESKI and MASTERS
Experience great bridges.

CASE STUDY | JT BUTLER EXPRESSWAY, JACKSONVILLE, FL.

PROJECT BACKGROUND

- I-95 Interchange at SR-202 in Jacksonville, FL
- Design-Build project
- 4 bridges with roadway widening and realignment

Summit
A MODJESKI and MASTERS COMPANY

PROJECT BACKGROUND

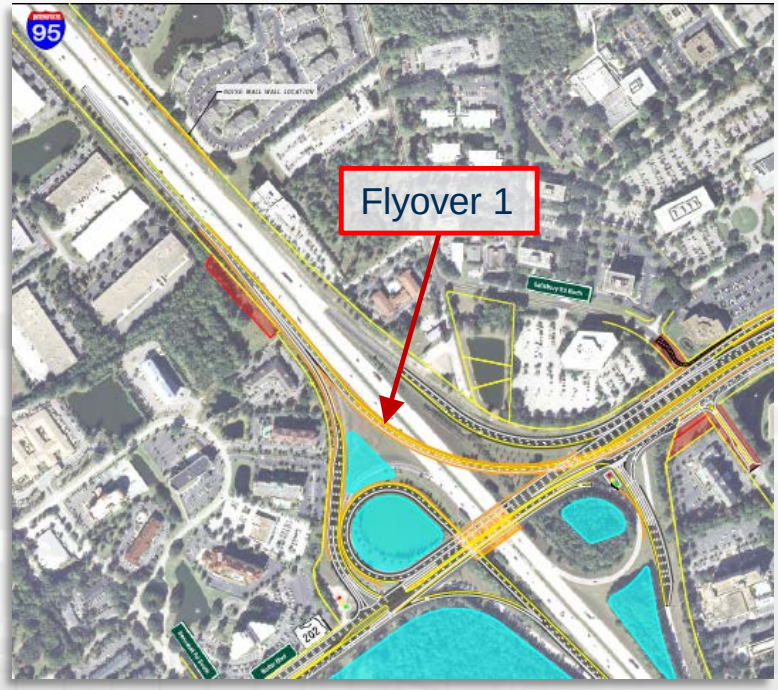

- Modjeski and Masters is the EOR for the Flyover 1 Bridge
- Modjeski is also serving as the construction engineer for SEMA
- Total Project Bid - $66.7m

FLYOVER 1 BRIDGE

- Total structure length is 1342 ft
- Span lengths from 140’ to 230’
- 7 span structure
  - Unit 1 = 4 spans (767 ft)
  - Unit 2 = 3 spans (575 ft)
- Multiple traffic crossings with tight clearances

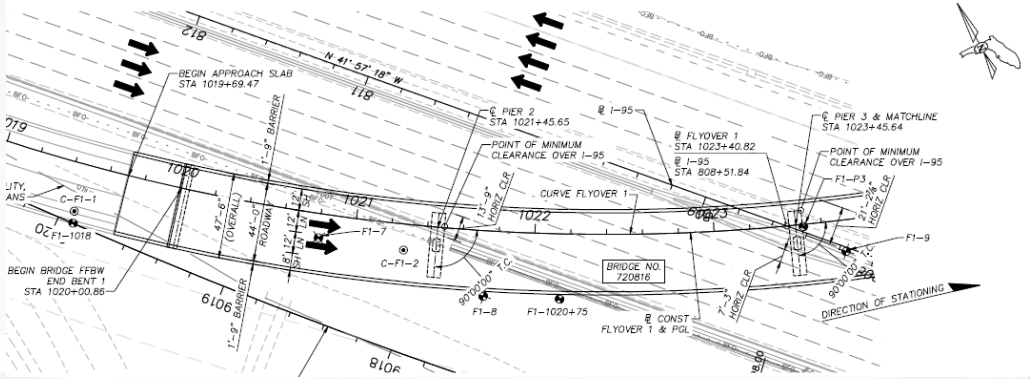

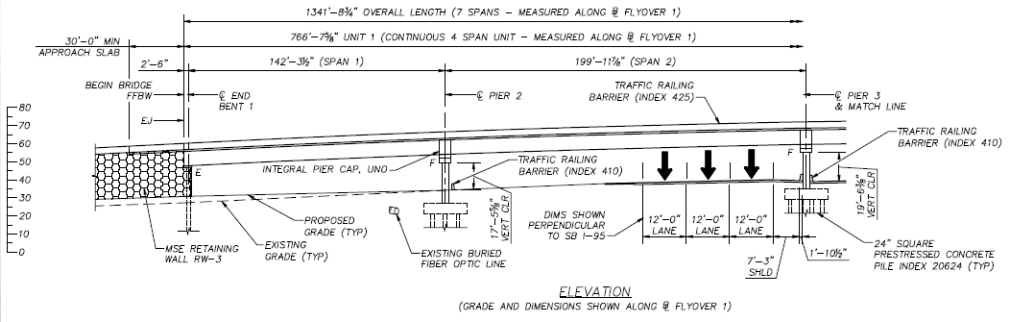

FLYOVER 1 – CROSS SECTION

- Constant radius = 1100 ft
- 2 girder lines, Spaced at 23’-9” o/c
- Deck width = 47’-6”, 7.5% cross slope

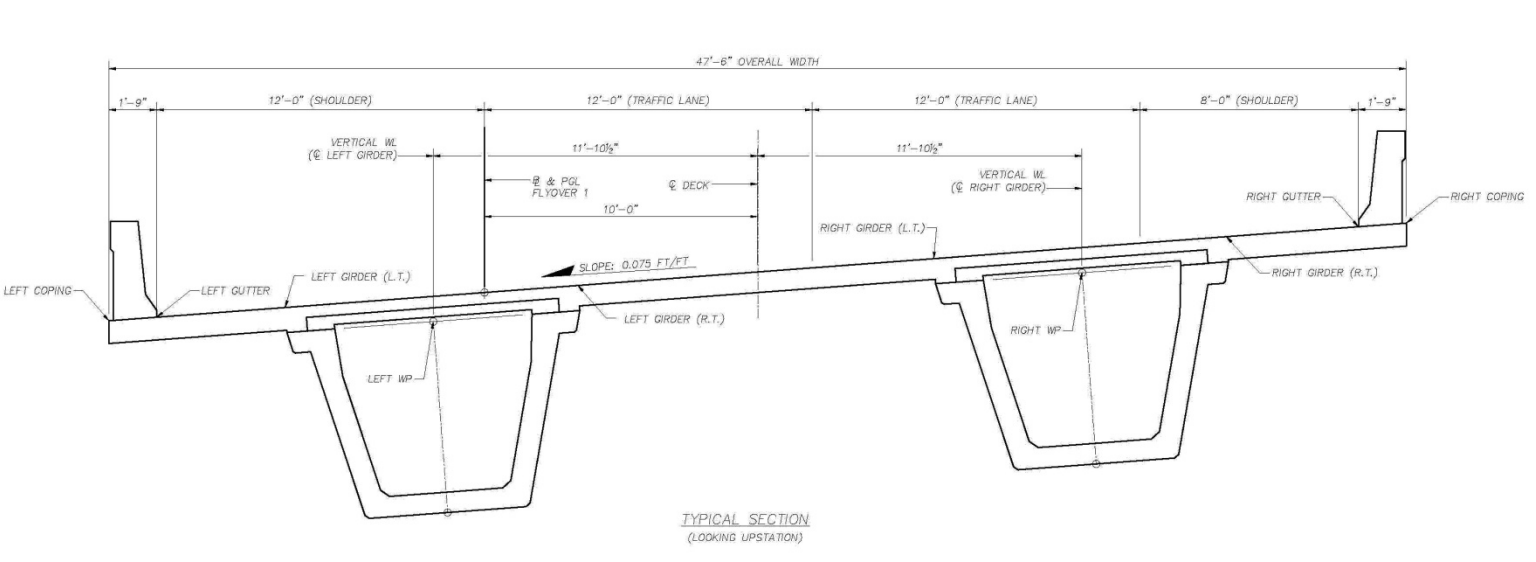

Flyover 1 Constructability

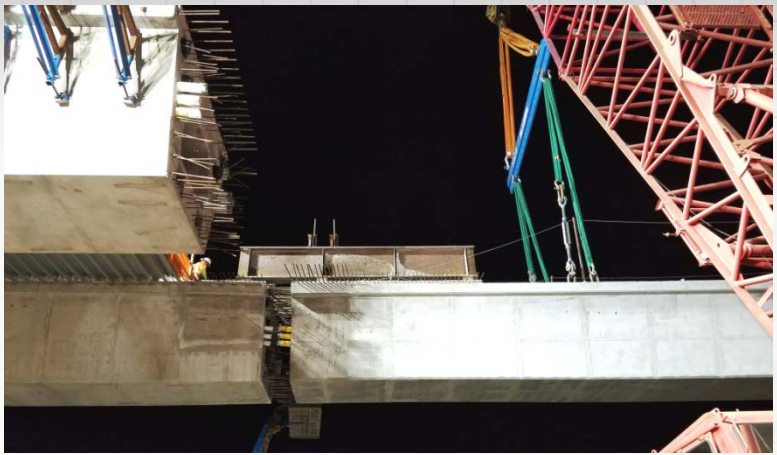

- Cantilevered Sections over Traffic
- Precast, post-tensioned pier caps
- Strongbacks
- Straddle Bents

Curved Precast Post-Tensioned U-Girders

- Design considerations
  - Max girder length 115 ft
  - Max girder weight 320 kips.
  - PT anchors at cantilevered girder ends
  - Staged PT during handling and erection

PRECAST U-GIRDERS – DESIGN FEATURES

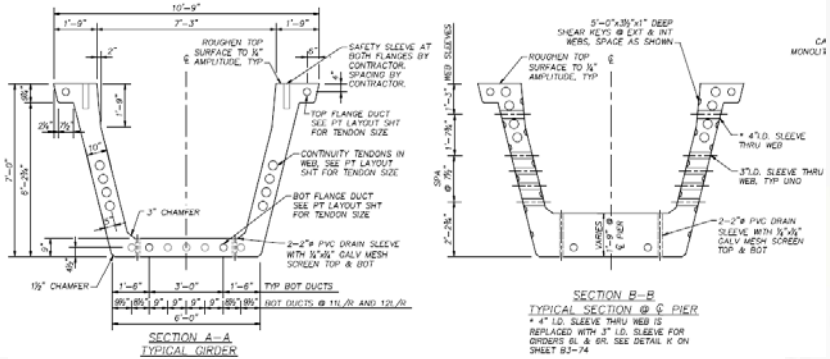

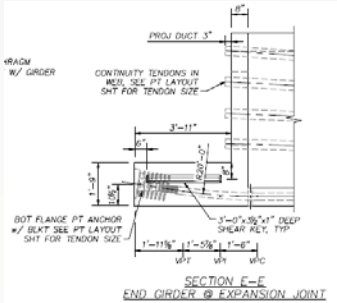

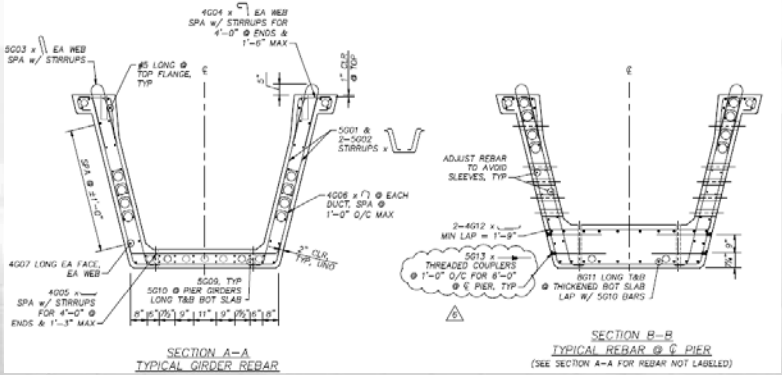

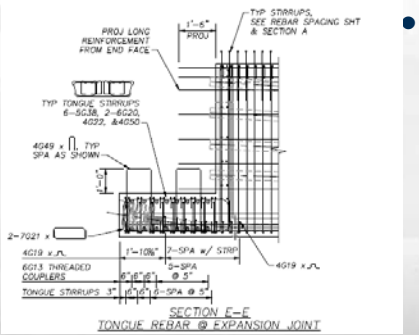

- Tendons in webs and top and bottom flanges
- WWF typical stirrups
- Notched Section at Expansion Joint Ends
- Thickened Bottom Slab

Curved Precast Post-Tensioned U-Girders

CANTILEVERED PRECAST GIRDERS

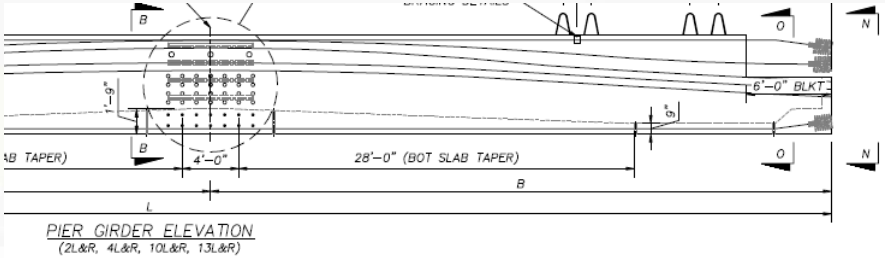

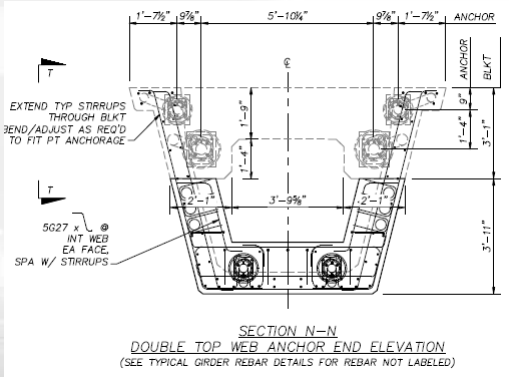

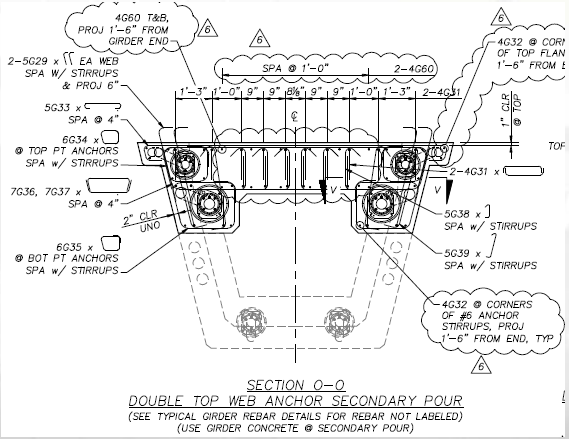

- Cantilevered girders each side of I95 traffic openings
- Secondary cast anchor blocks
- Girders stage stressed in casting yard and at site

Precast Post-Tensioned Pier Caps

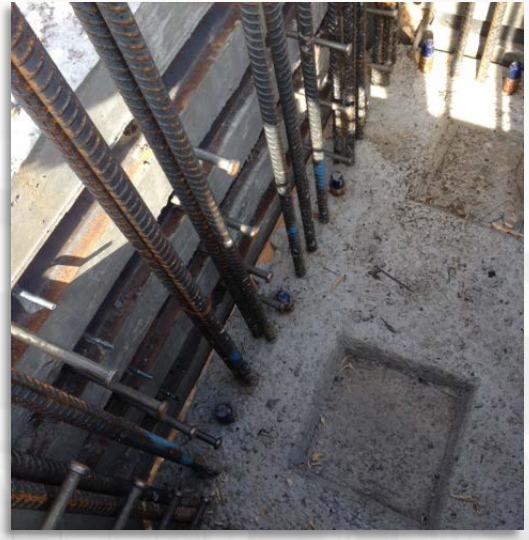

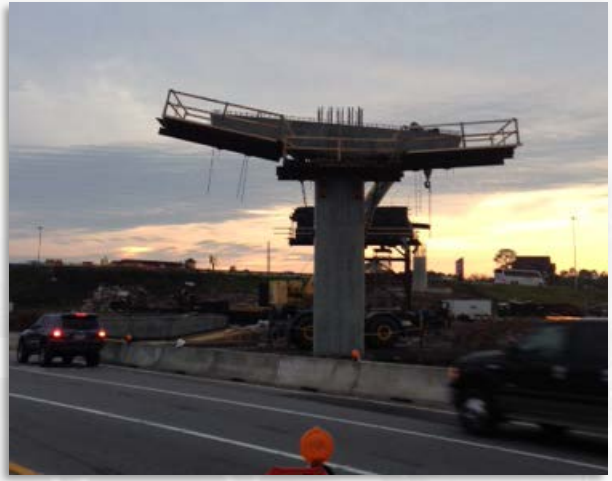

PRECAST POST-TENSIONED PIER CAPS

- Why precast the pier caps?
  - Piers 2, 3, 6, and 7 adjacent to and above traffic
  - Limited Vertical and Horizontal clearance during construction
  - No room for forming on site

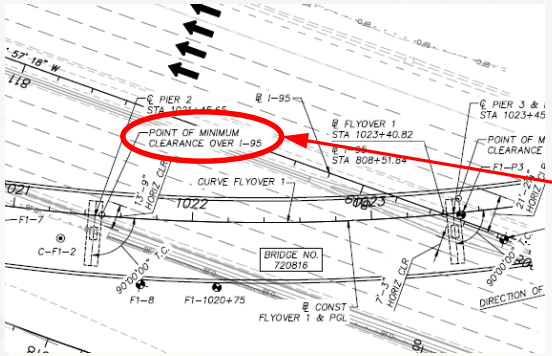

~17'-6"

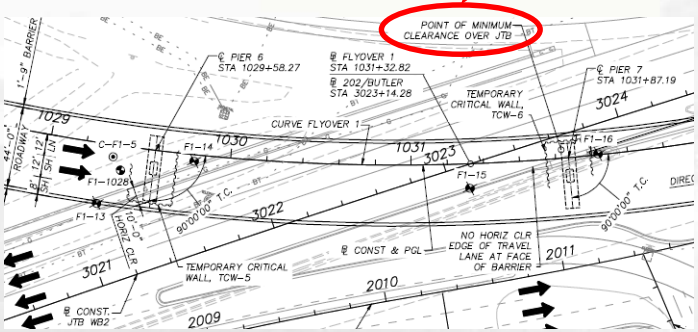

PRECAST CAPS

- Hammerhead Cap
- Full Continuity Connection to Pier
- Partial Depth supports girders
- CIP Diaphragm completes final cap

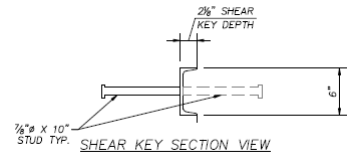

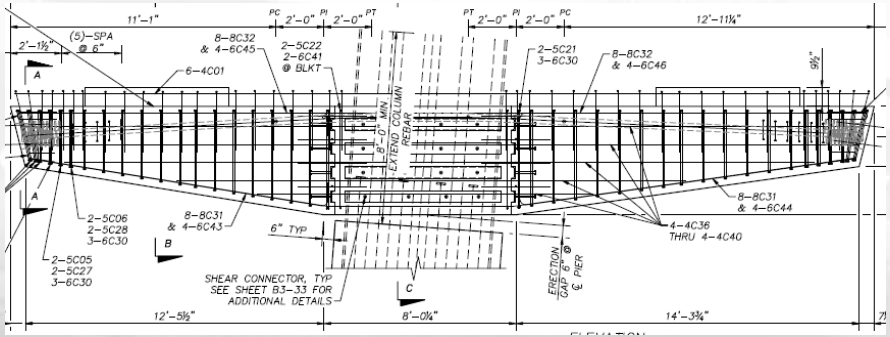

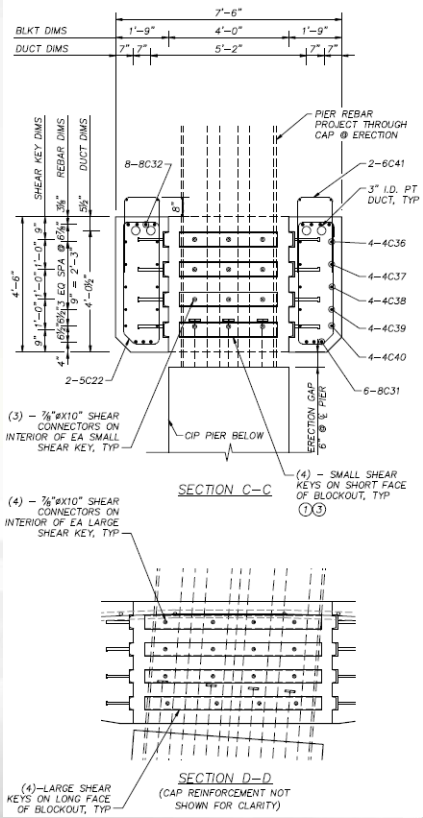

Strong Backs and Straddle Bents

- Strong backs and straddle bent used over traffic
  - Straddle Bents and Strong backs used at Traffic Opening over SR-202
  - Strong backs used at Traffic Opening at I-95
  - Strong back support at cantilevered girders up to 45’

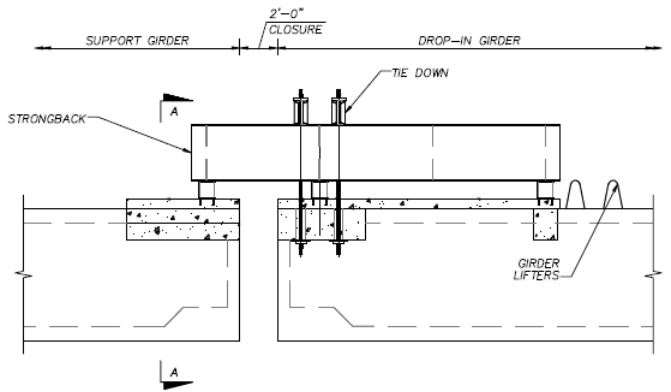

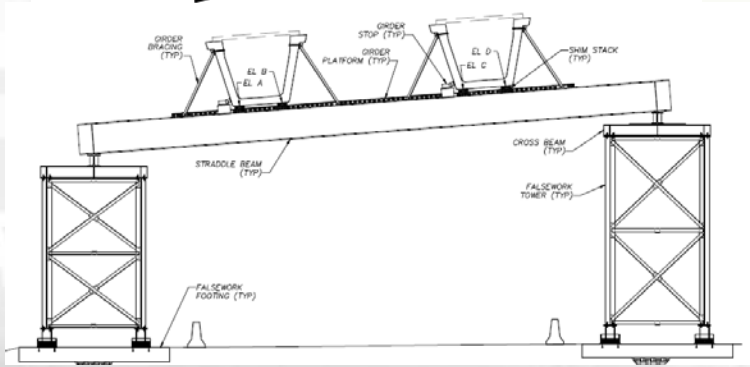

STRONGBACKS AT IH95 CROSSING

- Strongbacks have cantilever support spans up to 45ft
- Staged Stressing of top tendons for negative moments during girder erection.

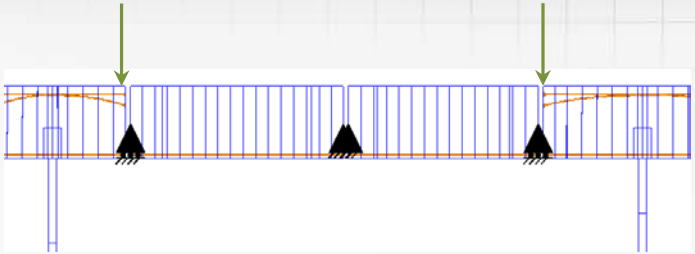

Strongbacks @ Girder Ends

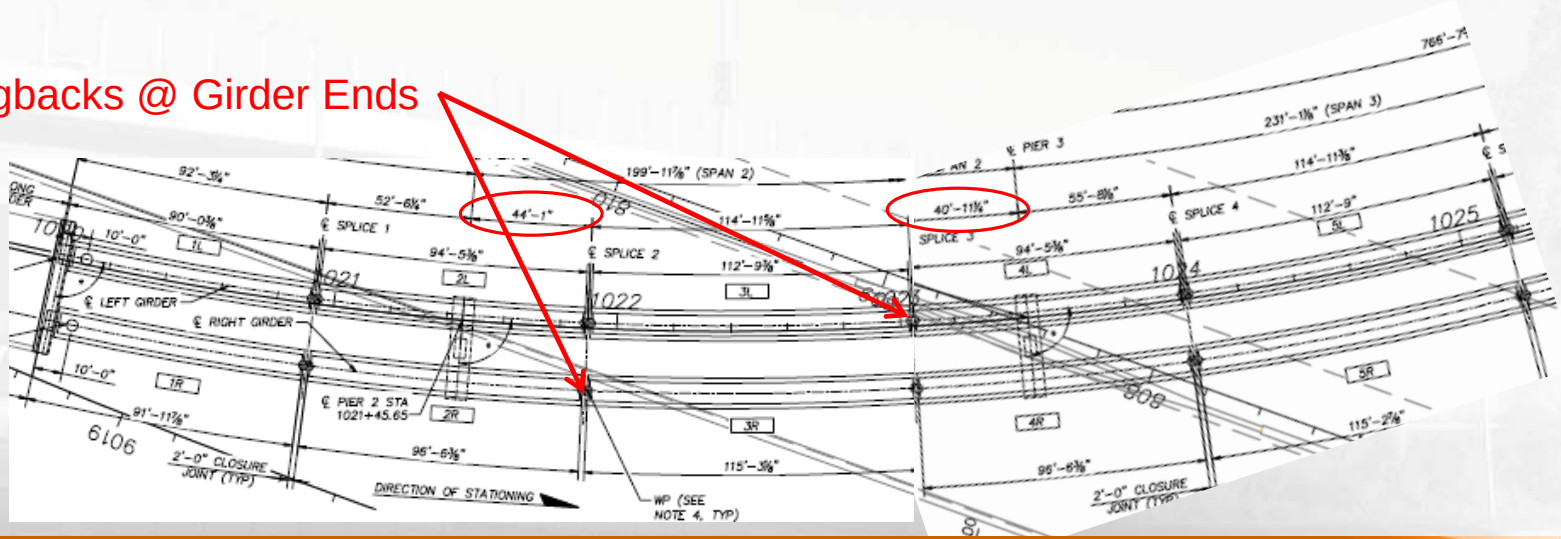

Girder Erection over IH95

- Drop In Girders supported at each end from strong backs resting on ends of Pier Girders

Positive Moment Crossover Tendon

- The combination of pier geometry and maximum girder lengths required that a splice be located in the positive moment region of span 6

- Splice 10 is located over traffic on SR-202 and supported by a straddle bent

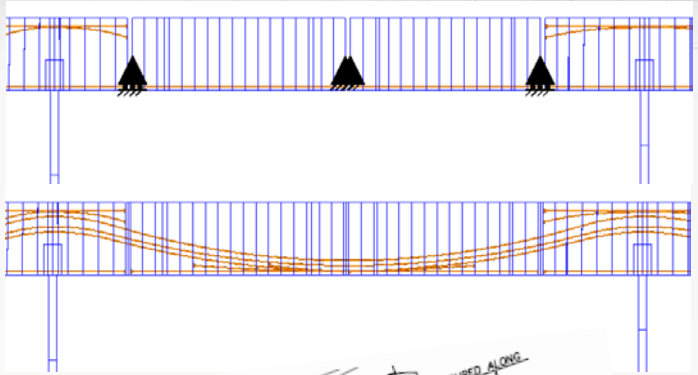

Strongbacks @ Girder Ends

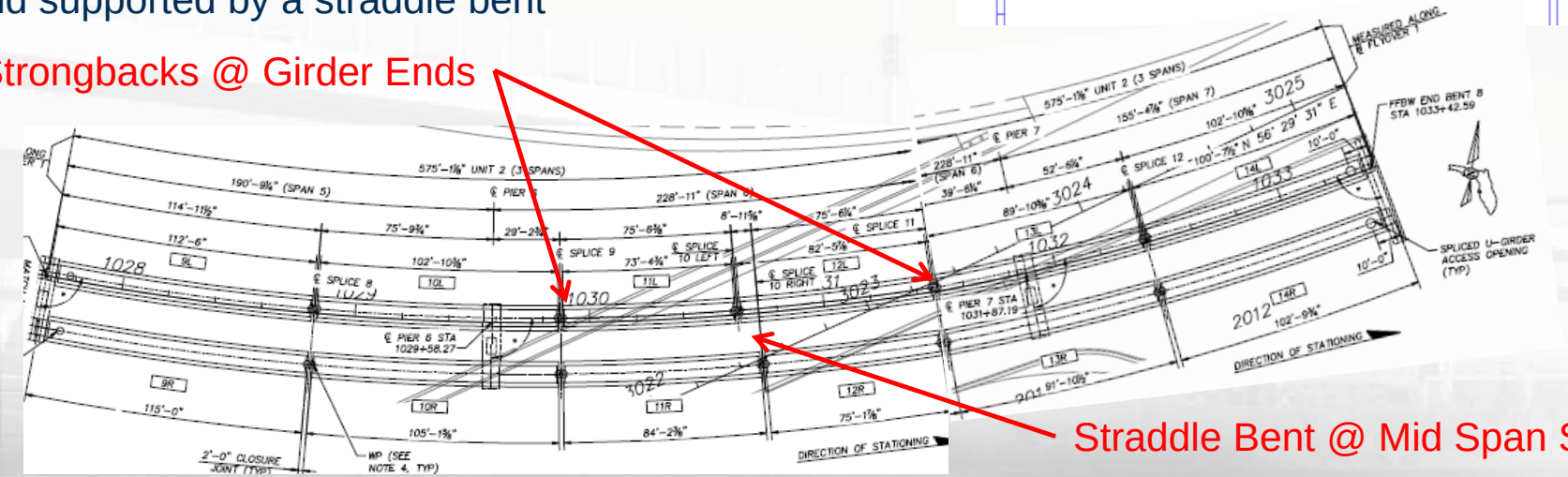

Straddle Bent @ Mid Span Splice

Girder Erection over SR202

- Drop In Girders supported at one end from strong backs and mid span at Straddle Bent

PT at Mid Span Closure

- 2 PT anchor blocks cast in bottom slab secondary pour
- (5) 12-0.6 strand tendons in bottom slab across splice

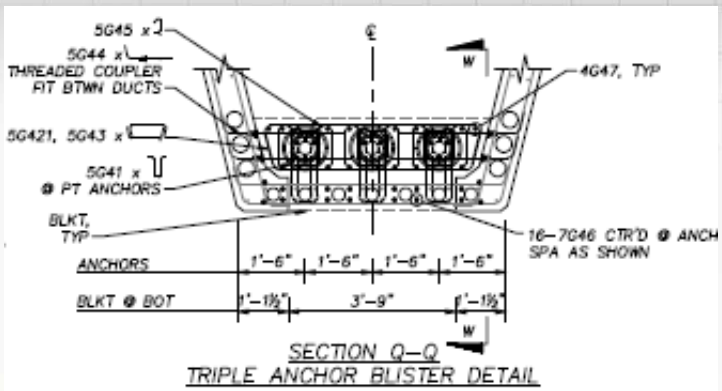

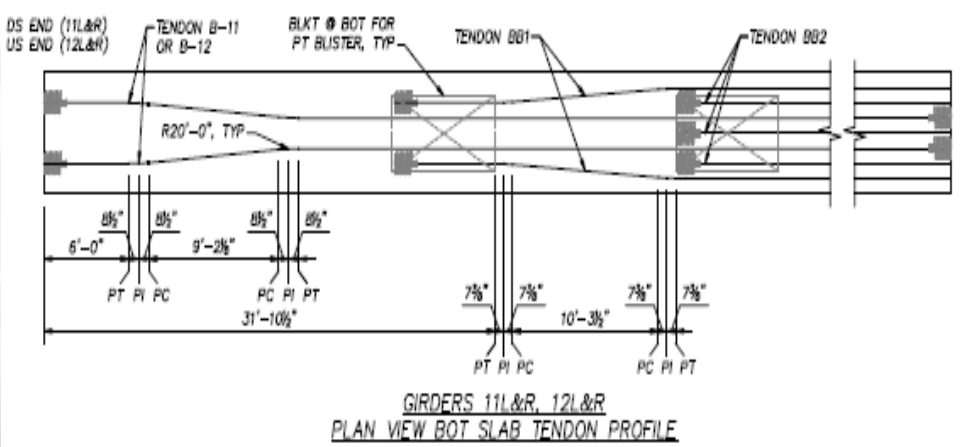

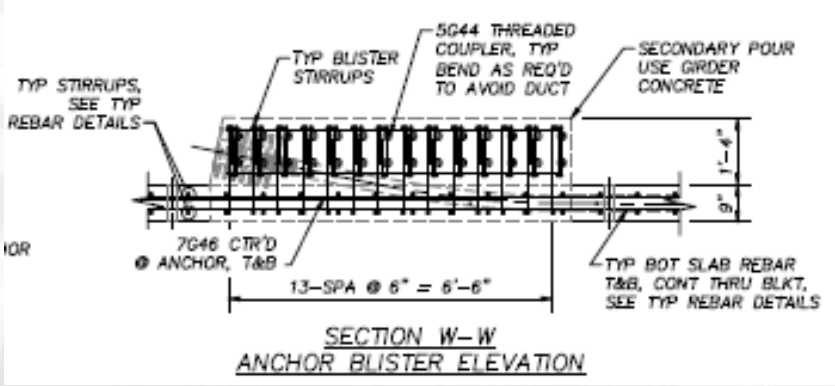

Positive Moment Crossover Tendon

- PT anchorage detailed w/ blockout in the bottom of the girders followed by secondary pour after stripping
- Total of (5) 12-0.6 strand tendons across splice

Job Site Progress as of September 30, 2017

- Strongback girders erected over I-95, completing girder erection in Unit 1
- Final girder erection over JTB late October / early November
- Project completion early 2017

Hurricane Matthew – October 7, 2016

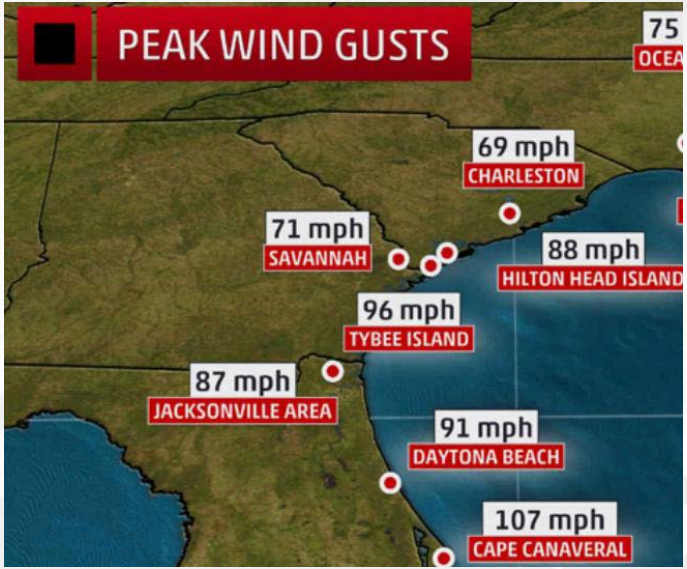

- Strong back girders erected 1 week before
- Closures cast 2.5 days prior to hurricane hitting Jacksonville area
- Contractor reported no damage to girders or falsework

Job Site Progress, Wednesday February 6, 2017

- All Girders Erected, All PT Stressed
- Deck Cast on Unit 1, Formed on Unit 2
- Project completion expected mid 2017

Summary

- Aesthetically pleasing, durable structures
- Cost Effective Option with Less Maintenance
- Splicing makes longer spans feasible
- U Girders can be cast curved or straight
- Design Option for Complex Interchanges

THANK YOU